HMC ARCHITECTS
Architecture Interiors Planning
3546 CONCOURS STREET
ONTARIO, CALIFORNIA 91764
Telephone: 909 . 989 . 9979
Fax: 909 . 483 . 1400
www. hmcarchitects .com

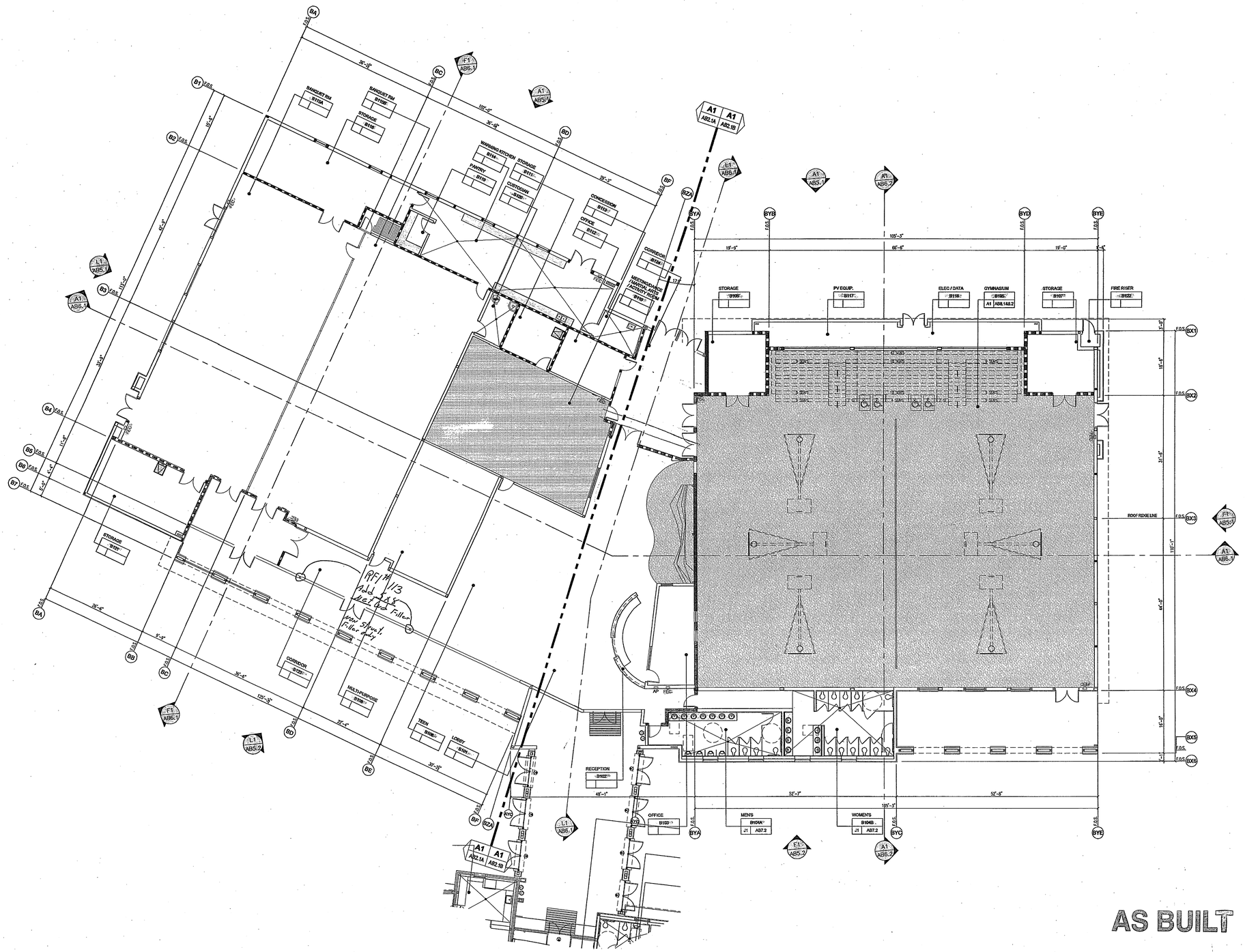

AS BUILT

Key Plan

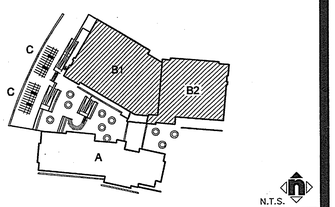

N.T.S.

Consultant's Seal

Agency Approval

Project Title

CITY OF RIVERSIDE

ORANGE TERRACE LIBRARY / COMMUNITY CENTER
PLAN CHECK NO. 07-1397

20010 ORANGE TERRACE PARKWAY
RIVERSIDE, CA 92508

HMC ARCHITECTS

No.	Revisions/Submissions	Date:
	Design Development Submittal	12/18/06
	Building Department Submittal	03/29/07
1	Building Department Resubmittal	05/22/07
2	Building Department Resubmittal / QA QC Review	06/22/07

Drawing Title

BUILDING 'B1' & 'B2' KEY FLOOR PLAN

Architect's Seal

LICENSED ARCHITECT
CHRISTOPHER RICHARD TAYLOR
NO. C-19759
REN. 02-24-09
STATE OF CALIFORNIA

Designed: SS	Project No. 2340001
Drawn: XL	Scale: AS NOTED
Checked: LP	Drawing No. AB2.0
Reviewed: RS	
Date: 06-22-07	Sheet of #

BUILDING 'B1' & B2' KEY FLOOR PLAN | A1 | 3/32" = 1'-0"

File Name: \\ont-e2\projects\2005 Jobs\2340 City of Riverside - Diffenbaugh\001-000\18-CAD\Sheets\AB2.0 BUILDING B KEY FLOOR PLAN.dwg Jun 21,2007-1:30pm

PLEASE RECYCLE AB2.0 BUILDING B KEY FLOOR PLAN.DWG

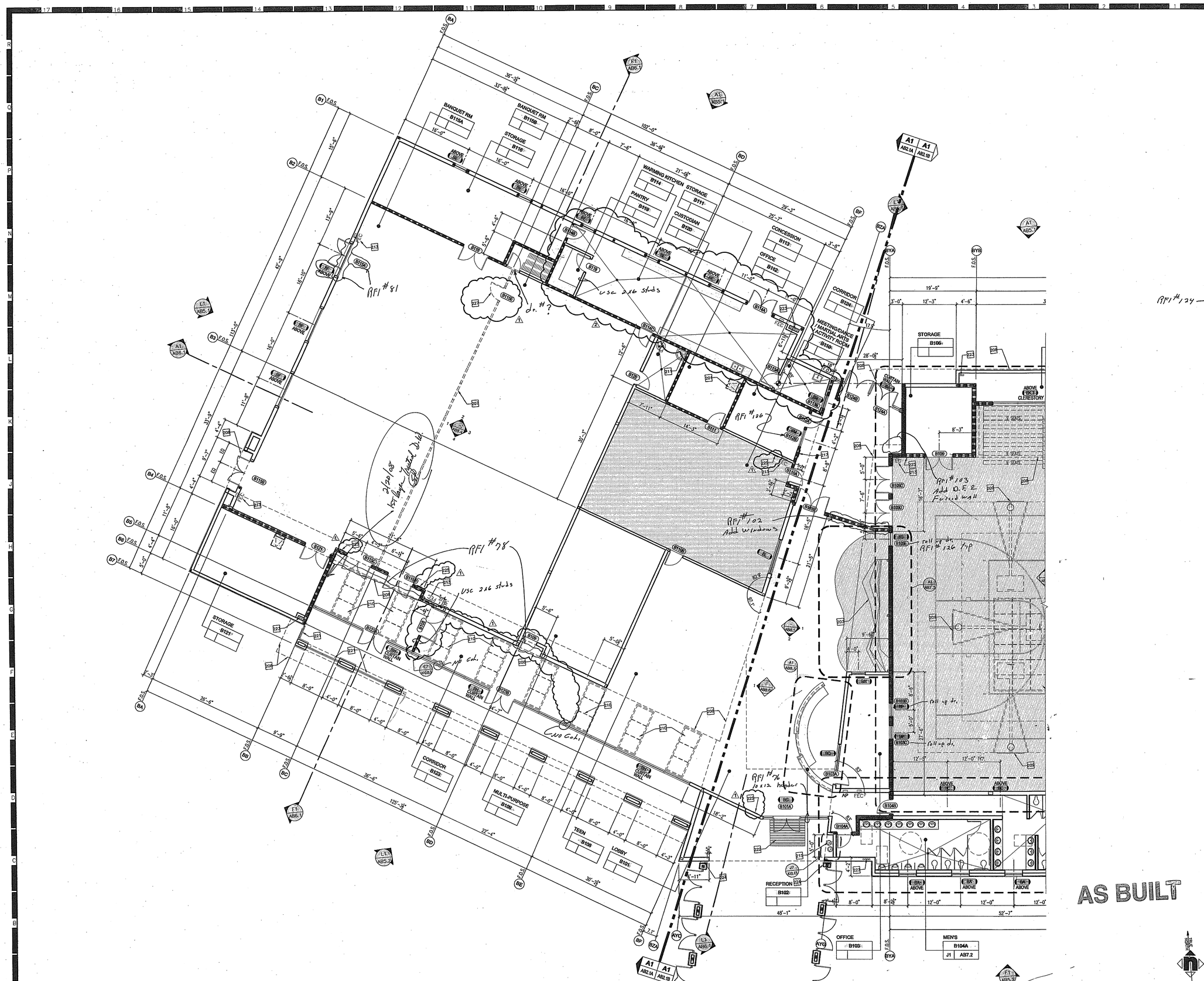

HMC ARCHITECTS

Architecture Interiors Planning

3546 CONCOURS STREET
ONTARIO, CALIFORNIA 91764
Telephone: 909 . 989 . 9979
Fax: 909 . 483 . 1400
www. hmcarchitects .com

#	FLOOR PLAN KEY NOTES	DETAIL
201	METAL ROOF ACCESS LADDER W/ ROOF HATCH ABOVE	A14 / A10.7.3
202	TELESCOPING BLEACHERS	SEE SPECS.
203	CLIMBING WALL - ATTACHED TO STRUCTURAL STEEL COLUMNS PER CLIMBING WALL MANUFACTURER'S REQUIREMENTS	A87.3
204	METAL LOCKERS	SEE SPECS.
205	GYM DIVIDER CURTAINS	SEE SPECS.
206	BOOK THEFT DETECTION SYSTEM	A7 / A10.9.1
207	FOLDING PANEL PARTITIONS	SEE SPECS.
208	LINE OF ROOF OR SOFFIT ABOVE	
209	BASKETBALL BACKBOARD	SEE SPECS.
210	SKYLIGHT ABOVE	
211	MOP SINK	SEE PLUMB.
212	BLEACHER COMPANION SEATING	
213	FIRE EXTINGUISHER CABINET	E11 / A10.5.2
214	DOWNSPOUT W/ CONCRETE SPLASH BOX	E1 & E14 / A10.7.4
215	ACCESSIBLE HIGH-LOW DRINKING FOUNTAIN, PER PLUMBING DWGS.	J7 / A10.13
216	FIRE SPRINKLER RISER	SEE PLUMB.
217	ASSISTIVE LISTENING SIGN	E11 / A10.4.1
218	ACCESSIBLE EXIT SIGN	E7 / A10.4.1
219	VENDING MACHINE (O.F.C.I)	
220	ORNAMENTAL METAL GATE	SEE GATE SCHEDULE - A1.1
221	METAL GUARDRAIL, 42" HIGH	N11 / A10.2.4
222	ALUMINUM GRATE SYSTEM, 8'-0" W x 6'-0" L, U.N.O.	A4 / A10.9.1
223	ROOF DRAIN & OVERFLOW DRAIN DOWN THRU WALL. OVERFLOW DRAIN OUTLET =6" ABV.GRADE, PER PLUMBING DWGS.	A4 / A10.5.2
224	8" EXTERIOR WALL EXPANSION / SEISMIC JOINT	A7 / A10.5.3
225	SIGNAGE: OCCUPANT LOAD	SEE DOOR SCHEDULE & A11 / A10.4.1
226	BOOK CART (N.I.C.)	
227	ADA COMPLIANT PASS DOOR WITH EXIT SIGN AND PANIC HARDWARE	SEE MFR.
228	ROOF HATCH	E11/A10.7.3
229	ACCESSIBLE BENCH	J11/A10.9.1
230	STEEL COLUMN - PAINTED	SEE STRUCTURAL

FLOOR PLAN NOTES

1. FOR TYPICAL SYMBOLS AND ABBREVIATIONS, REFER TO SHEET G1.1
2. WALLS:
   A. REFER TO STRUCTURAL DRAWINGS FOR EXTERIOR & INTERIOR WALL STUD THICKNESSES.
   B. ALL EXTERIOR WALLS ARE 2X6 STUDES AT 16" O.C., W/ EXTERIOR PLASTER OF 7/8" PLYWOOD SHEATHING, U.N.O.
   C. ALL INTERIOR WALLS ARE 2X6 WOOD STUDS AT 16" O.C. W/ 5/8" TYPE "X" GYP. BD. BOTH SIDES, U.N.O. REFER TO AA9.1 & AB9.9 FOR INTERIOR FINISH SCHEDULES.
3. WALL TYPES: REFER TO SHEET A10.5.5 & A10.5.1 FOR WALL DETAILS.
4. INSULATION: PROVIDE INSULATION AS FOLLOWS:
   A. EXTERIOR STUD WALLS: R-19
   B: ROOFS: R-30
   C: INTERIOR STUD PARTITIONS: ACOUSTICAL (FULL HEIGHT)
5. DOORS: INDICATED ON PLANS WITH SYMBOL. REFER TO SHEET AA9.1 & AB9.1 FOR DOOR SCHEDULES AND FRAME TYPES
6. WINDOWS: INDICATED ON PLANS WITH SYMBOL. REFER TO SHEET AA9.1, AB9.1 & AB9.2 FOR WINDOW SCHEDULES AND FRAME TYPES.

FLOOR PLAN LEGEND

- NON RATED WOOD STUD WALL
- 1 HOUR RATED WOOD STUD WALL / OCCUPANCY SEPARATION WALL SEE DETAIL E11/A10.5.1
- 2 HOUR RATED WOOD STUD WALL / AREA SEPARATION WALL SEE DETAIL E11/A10.5.1
- NON RATED, NON BEARING METAL STUD WALL SEE DETAIL E14/A10.5.1
- DEPRESSED CONC. SLAB PER STRUCTURAL
- F.O.S. FACE OF STUD
- FEC FIRE EXTINGUISHER & CABINET - SEE DETAIL E11/A10.5.2
- ANNUNCIATOR PANEL - SEE ELECTRICAL DRAWINGS

Key Plan

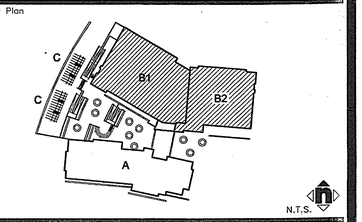

Consultant's Seal

Agency Approval

Project Title

CITY OF RIVERSIDE

ORANGE TERRACE LIBRARY / COMMUNITY CENTER

PLAN CHECK NO. 07-1397

20010 ORANGE TERRACE PARKWAY
RIVERSIDE, CA 92508

SM HMC ARCHITECTS

No.	Revisions/Submissions	Date:
	Design Development Submittal	12/18/06
	Building Department Submittal	03/29/07
1	Building Department Resubmittal	05/22/07
2	Building Department Resubmittal / QA QC Review	06/22/07

Drawing Title

BUILDING 'B' FLOOR PLAN - SEGMENT A

Architect's Seal

LICENSED ARCHITECT CHRISTOPHER RICHARD LANDON REG. NO. C-19797 REN. 02-24-08 STATE OF CALIFORNIA

Designed:	SS	Project No.	2340001
Drawn:	XL	Scale:	AS NOTED
Checked:	LP	Drawing No.	AB2.1A
Reviewed:	RS		
Date:	06-22-07	Sheet	of ##

BUILDING 'B1' FLOOR PLAN - SEGMENT A | A1 | 1/8" = 1'-0"

File Name: \\ont-e2\projects\2005 Jobs\2340 City of Riverside – Diffenbaugh\001-000\18-CAD\Sheets\AB2.1A-2.1B BUILDING B FLOOR PLAN – SEGMENT A & B.dwg Jun 21,2007-3:20pm

PLEASE RECYCLE AB2.1A-2.1B BUILDING B FLOOR PLAN – SEGMENT A & B.DWG

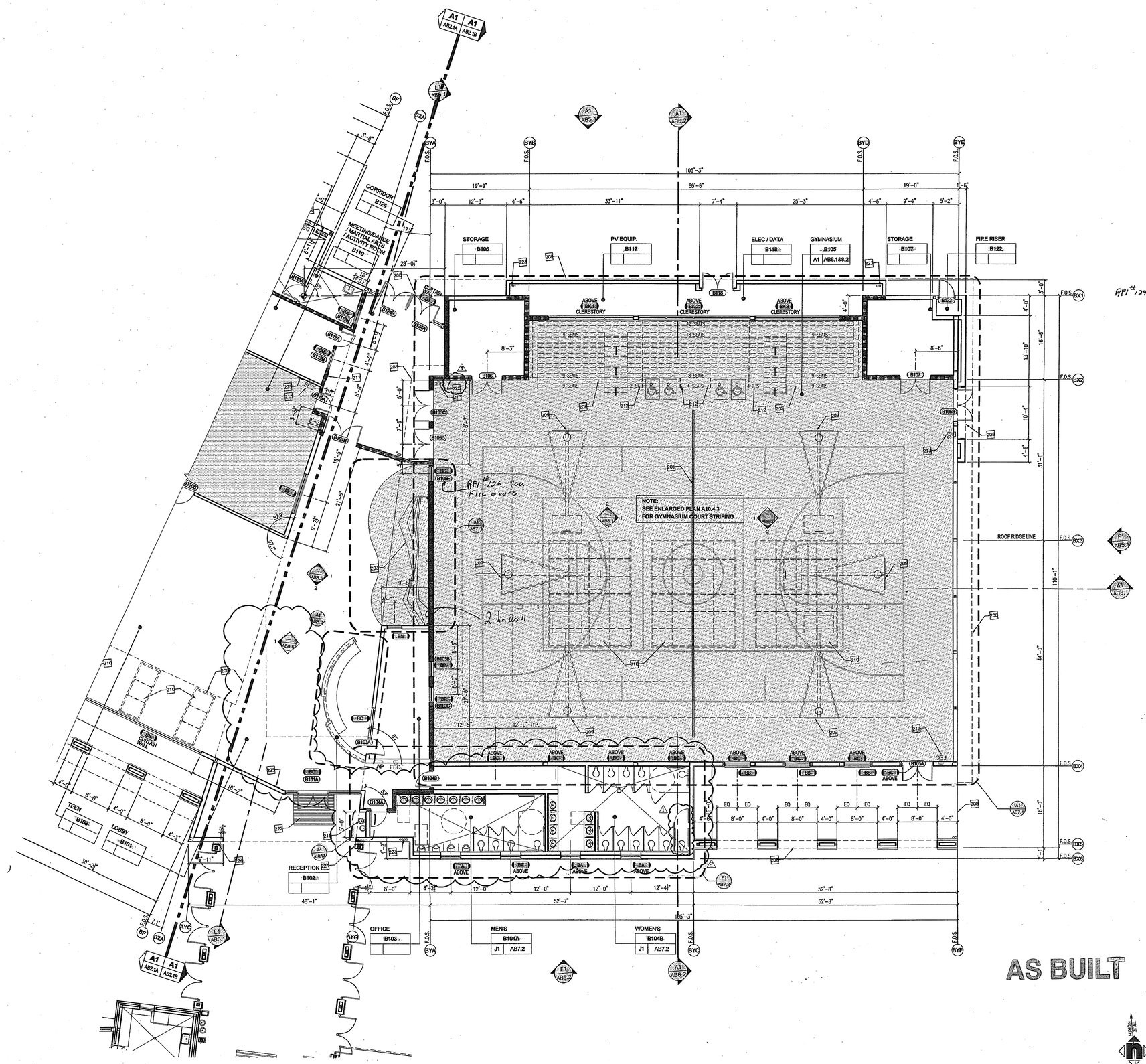

AS BUILT

BUILDING 'B2' FLOOR PLAN - SEGMENT B | A1 | 1/8" = 1'-0"

HMC ARCHITECTS
Architecture Interiors Planning
3546 CONCOURS STREET
ONTARIO, CALIFORNIA 91764
Telephone: 909 . 989 . 9979
Fax: 909 . 483 . 1400
www. hmcarchitects .com

#	FLOOR PLAN KEY NOTES	DETAIL
201	METAL ROOF ACCESS LADDER W/ ROOF HATCH ABOVE	A14 / A10.7.3
202	TELESCOPING BLEACHERS	SEE SPECS.
203	CLIMBING WALL - ATTACHED TO STRUCTURAL STEEL COLUMNS PER CLIMBING WALL MANUFACTURER'S REQUIREMENTS	A87.3
204	METAL LOCKERS	SEE SPECS.
205	GYM DIVIDER CURTAINS	SEE SPECS.
206	BOOK THEFT DETECTION SYSTEM	A7 / A10.9.1
207	FOLDING PANEL PARTITIONS	SEE SPECS.
208	LINE OF ROOF OR SOFFIT ABOVE	
209	BASKETBALL BACKBOARD	SEE SPECS.
210	SKYLIGHT ABOVE	
211	MOP SINK	SEE PLUMB.
212	BLEACHER COMPANION SEATING	
213	FIRE EXTINGUISHER CABINET	E11 / A10.5.2
214	DOWNSPOUT W/ CONCRETE SPLASH BOX	E1 & E14 / A10.7.4
215	ACCESSIBLE HIGH-LOW DRINKING FOUNTAIN, PER PLUMBING DWGS.	J7 / A10.13
216	FIRE SPRINKLER RISER	SEE PLUMB.
217	ASSISTIVE LISTENING SIGN	E11 / A10.4.1
218	ACCESSIBLE EXIT SIGN	E7 / A10.4.1
219	VENDING MACHINE (O.F.C.I)	
220	ORNAMENTAL METAL GATE	SEE GATE SCHEDULE - A1.1
221	METAL GUARDRAIL, 42" HIGH	N11 / A10.2.4
222	ALUMINUM GRATE SYSTEM, 8'-0" W x 6'-0" L, U.N.O.	A4 / A10.9.1
223	ROOF DRAIN & OVERFLOW DRAIN DOWN THRU WALL. OVERFLOW DRAIN OUTLET +6" ABV. GRADE, PER PLUMBING DWGS.	A4 / A10.5.2
224	6" EXTERIOR WALL EXPANSION / SEISMIC JOINT	A7 / A10.5.3
225	SIGNAGE: OCCUPANT LOAD	SEE DOOR SCHEDULE & A11 / A10.4.1
226	BOOK CART (N.I.C.)	
227	ADA COMPLIANT PASS DOOR WITH EXIT SIGN AND PANIC HARDWARE	SEE MFR.
228	ROOF HATCH	E11/A10.7.3
229	ACCESSIBLE BENCH	J11/A10.9.1
230	STEEL COLUMN - PAINTED	SEE STRUCTURAL

RFI #124

FLOOR PLAN NOTES

1. FOR TYPICAL SYMBOLS AND ABBREVIATIONS, REFER TO SHEET G1.1
2. WALLS:
   A. REFER TO STRUCTURAL DRAWINGS FOR EXTERIOR & INTERIOR WALL STUD THICKNESSES.
   B. ALL EXTERIOR WALLS ARE 2X6 STUDS AT 16" O.C., W/ EXTERIOR PLASTER OF ½" PLYWOOD SHEATHING, U.N.O.
   C. ALL INTERIOR WALLS ARE 2X6 WOOD STUDS AT 16" O.C. W/ ⅝" TYPE "X" GYP. BD. BOTH SIDES, U.N.O. REFER TO A49.1 & A89.9 FOR INTERIOR FINISH SCHEDULES.
3. WALL TYPES: REFER TO SHEET A10.5 & A10.5.1 FOR WALL DETAILS.
4. INSULATION: PROVIDE INSULATION AS FOLLOWS:
   A. EXTERIOR STUD WALLS: R-19
   B: ROOFS: R-30
   C: INTERIOR STUD PARTITIONS: ACOUSTICAL (FULL HEIGHT)
5. DOORS: INDICATED ON PLANS WITH SYMBOL. REFER TO SHEET A49.1 & A89.1 FOR DOOR SCHEDULES AND FRAME TYPES
6. WINDOWS: INDICATED ON PLANS WITH SYMBOL. REFER TO SHEET A49.1, A89.1 & A89.2 FOR WINDOW SCHEDULES AND FRAME TYPES.

FLOOR PLAN LEGEND

- NON RATED WOOD STUD WALL
- 1 HOUR RATED WOOD STUD WALL / OCCUPANCY SEPARATION WALL SEE DETAIL E11/A10.5.1
- 2 HOUR RATED WOOD STUD WALL / AREA SEPARATION WALL SEE DETAIL E11/A10.5.1
- NON RATED, NON BEARING METAL STUD WALL SEE DETAIL E14/A10.5.1
- DEPRESSED CONC. SLAB PER STRUCTURAL
- F.O.S. FACE OF STUD
- FEC FIRE EXTINGUISHER & CABINET - SEE DETAIL E11/A10.5.2
- ANNUNCIATOR PANEL - SEE ELECTRICAL DRAWINGS

Key Plan

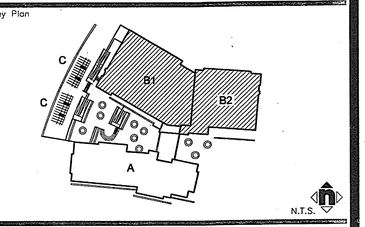

Consultant's Seal

Agency Approval

Project Title

ORANGE TERRACE LIBRARY / COMMUNITY CENTER
PLAN CHECK NO. 07-1397

20010 ORANGE TERRACE PARKWAY
RIVERSIDE, CA 92508

CITY OF RIVERSIDE

HMC ARCHITECTS

No.	Revisions/Submissions	Date:
	Design Development Submittal	12/18/06
	Building Department Submittal	03/29/07
1	Building Department Resubmittal	05/22/07
2	Building Department Resubmittal / QA QC Review	06/22/07

Drawing Title

BUILDING 'B' FLOOR PLAN - SEGMENT B

Architect's Seal: LICENSED ARCHITECT CHRISTOPHER RICHARD TAYLOR, REN. 02-24-09, STATE OF CALIFORNIA

Designed:	SS	Project No.	2340001
Drawn:	XL	Scale:	AS NOTED
Checked:	LP	Drawing No.	AB2.1B
Reviewed:	RS		
Date:	06-22-07	Sheet	of #

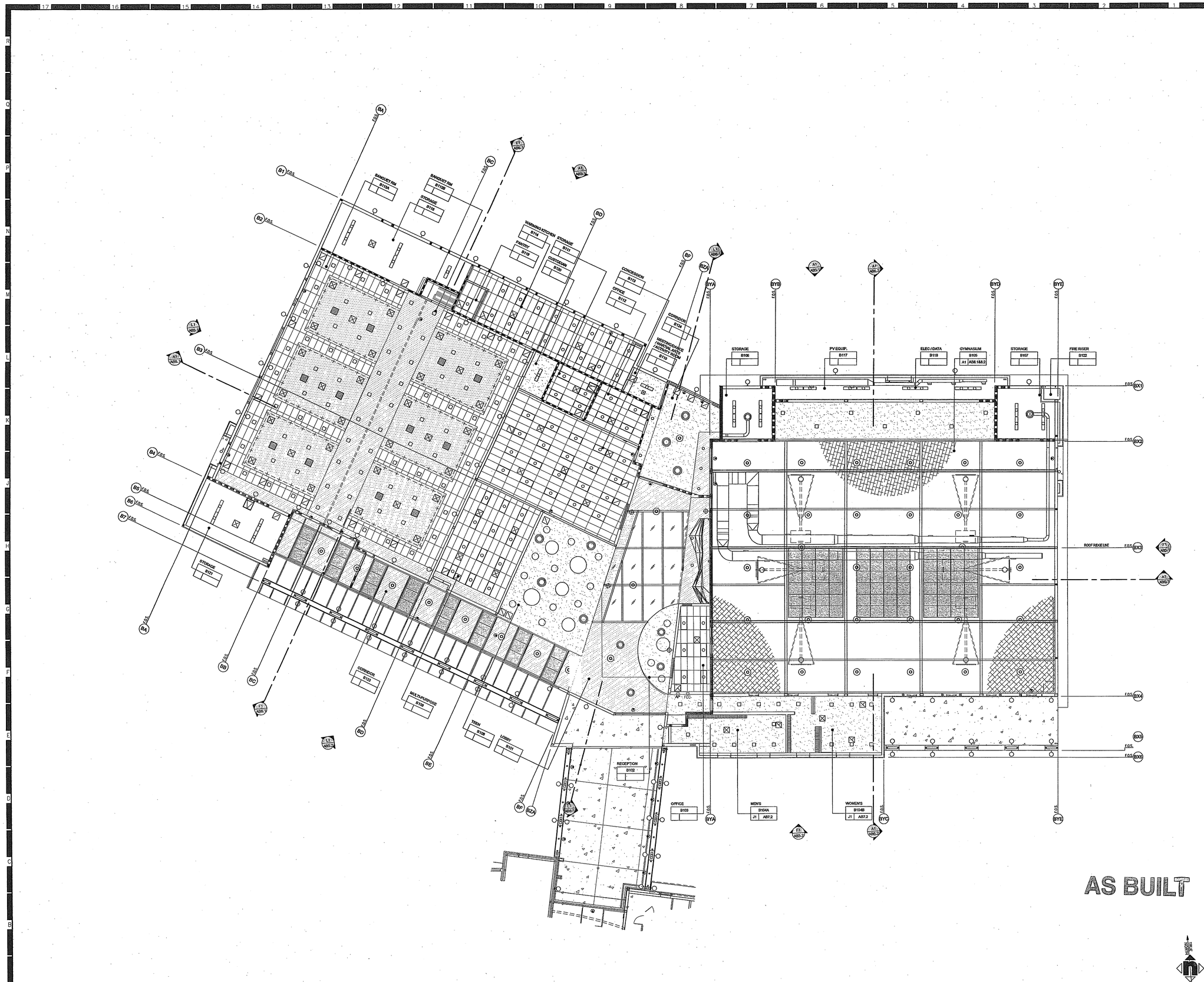

AS BUILT

BUILDING 'B1' & B2' KEY REFLECTED CEILING PLAN | A1

3/32" = 1'-0"

HMC ARCHITECTS
Architecture Interiors Planning
3546 CONCOURS STREET
ONTARIO, CALIFORNIA 91764
Telephone: 909 . 989 . 9979
Fax: 909 . 483 . 1400
www. hmcarchitects .com

#	REFLECTED CEILING PLAN KEY NOTES	DETAIL
301	EXPOSED DUCTWORK, PAINTED	SEE MECH.
302	GYPSUM BOARD SOFFIT - PAINTED	A10.9.4
303	ACCESS PANEL	N4 / A10.9.4
304	BASKETBALL BACKSTOPS	SEE SPECS.
305	EXPOSED STEEL BEAM - PAINTED	SEE STRUCT.
306	PROJECTION SCREEN: RECESSED MOUNTED	E7 / A10.9.4
307	GYMNASIUM CURTAIN DIVIDER	SEE SPECS. & A11/A10.9.3
308	6X10 WOOD TRELLIS	N8&J1/A10.7.4
309	FOLDING PANEL PARTITION	A14&J14/A10.9.4
310	EXTERIOR PLASTER CEILING CONTROL JOINT	N4/ A10.6
311	EXTERIOR PLASTER SOFFIT VENT	A11/A10.9.4
312	SEISMIC EXPANSION JOINT, FIRE RESISTIVE	E7/A10.5.3
313	PERFORATED CEILING VENT, 4" W x 22" L @ 24" o.c.	E11/A10.9.4

REFLECTED CEILING PLAN NOTES

1. FOR TYPICAL SYMBOLS AND ABBREVIATIONS, REFER TO SHEET G1.2
2. FOR TYPICAL CEILING NOTES AND DETAILS, SEE SHEETS A10.9.2, A10.9.3 & A10.9.4
3. ALL EXPOSED DUCTWORK TO BE PAINTED
4. ALL SUSPENDED CEILING GRID SYSTEMS SHALL BE CENTERED IN SPACES AS SHOWN, U.N.O.
5. LIGHT FIXTURES AND MECHANICAL REGISTERS ARE SHOWN FOR LOCATION PURPOSES ONLY. REFER TO ELEC. & MECH. DWGS FOR ADDITIONAL INFORMATION
6. PROVIDE CEILING ACCESS PANELS AT HARD CEILINGS WHERE REQ'D TO ACCESS PLUMBING & MECHANICAL CONTROLS & WHEN ATTIC HEAD ROOM IS >30" (SEE DETAIL N4/A10.9.4)
7. SEISMIC SWAY BRACING NOT SHOWN FOR CLARITY. PROVIDE SWAY BRACING IN TWO DIRECTIONS AT 90° FOR ANY PENDENT MOUNTED LIGHT FIXTURE, SUSPENDED DUCTWORK, PIPES, CONDUITS, ETC., THAT WILL NOT SWING FREE AND CLEAR TO 45° IN ANY DIRECTION. SEE TYPICAL PENDANT LIGHT SWAY BRACE DETAILS A7/A10.9.2

REFLECTED CEILING PLAN LEGEND

- SURFACE MOUNTED FIXTURE
- SURFACE MOUNTED INDUSTRIAL LIGHT FIXTURE
- 2' x 4' RECESSED FIXTURE
- PENDANT FIXTURE
- TUBULAR SKYLIGHT DIFFUSER
- PENDANT LIGHT FIXTURE
- RECESSED DOWN LIGHT
- RECESSED DOWN LIGHT
- WALL MOUNTED FIXTURE
- RECESSED WALL FIXTURE
- RECESSED FIXTURE
- LIGHT COVE
- SA / RA — SA / EXH — MECHANICAL REGISTERS REFER TO MECHANICAL DRAWINGS FOR REGISTER SIZES
- EXIT SIGN SOLID LINES INDICATE THE LOCATIONS OF ILLUMINATION WITH EXIT DIRECTIONAL ARROW
- CEILING ACCESS PANEL REFER TO SHEET & MECHANICAL DRAWINGS
- SUSPENDED T-BAR CEILING SYSTEM WITH 2'-0" x 4'-0" CEILING TILES, SEE SHEET A10.9.2
- O.T.S. — NO FINISH CEILING EXPOSED TO STRUCTURE ABOVE
- EXTERIOR PLASTER SEE SHEET A10.9.4
- SUSPENDED GYPSUM BOARD CEILING SYSTEM, SEE SHEET A10.9.3
- FRAMED GYPSUM BOARD CEILING SEE SHEET A10.9.4
- ACOUSTICAL CEILING TREATMENT (TECTUM) E11/A10.9.2

Key Plan

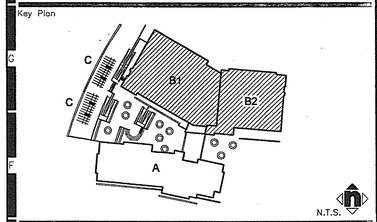

Consultant's Seal

Agency Approval

Project Title

ORANGE TERRACE LIBRARY / COMMUNITY CENTER

PLAN CHECK NO. 07-1397

20010 ORANGE TERRACE PARKWAY
RIVERSIDE, CA 92508

CITY OF RIVERSIDE

HMC ARCHITECTS

No.	Revisions/Submissions	Date:
	Design Development Submittal	12/18/06
	Building Department Submittal	03/29/07
1	Building Department Resubmittal	05/22/07
2	Building Department Resubmittal / QA QC Review	06/22/07

Drawing Title

BUILDING 'B1' & B2' KEY REFLECTED CLG. PLAN

Architect's Seal

LICENSED ARCHITECT CONSTANTINE SOTIRIOS SOTIRIOU LICENSE NO. C-18759 REN. 02-31-09 STATE OF CALIFORNIA

Designed: SS	Project No. 2340001
Drawn: SS/XL	Scale: AS NOTED
Checked: LP	Drawing No.
Reviewed: RS	AB3.0
Date: 06-22-07	Sheet of ##

File Name: \\ont-e2\projects\2005 Jobs\2340 City of Riverside - Diffenbaugh\001-000\18-CAD\Sheets\AB3.0 BUILDING B KEY REFLECTED CEILING PLAN.dwg Jun 21,2007-1:11pm

PLEASE RECYCLE AB3.0 BUILDING B KEY REFLECTED CEILING PLAN.DWG

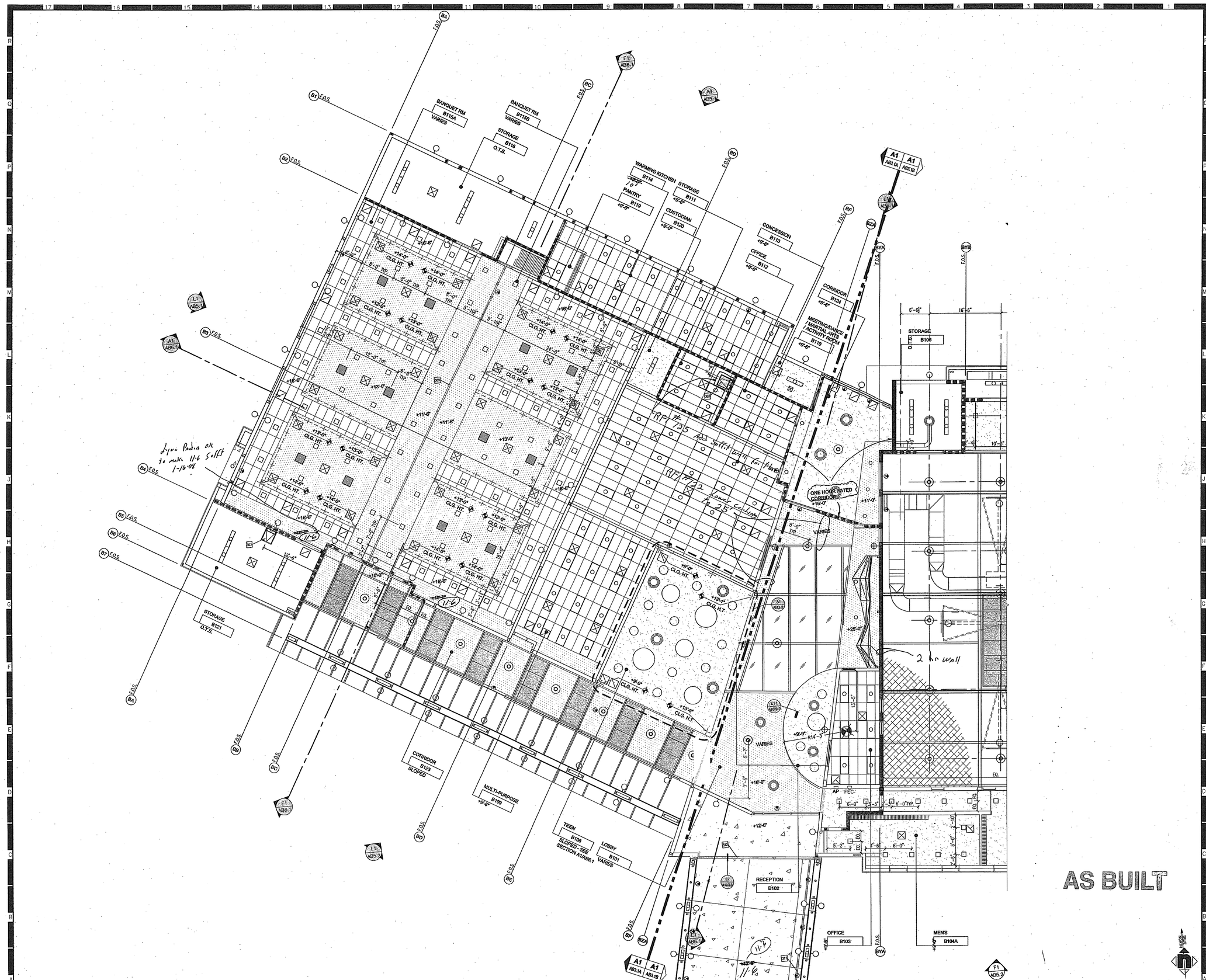

HMC ARCHITECTS

Architecture Interiors Planning

3546 CONCOURS STREET
ONTARIO, CALIFORNIA 91764
Telephone: 909 . 989 . 9979
Fax: 909 . 483 . 1400
www. hmcarchitects .com

#	REFLECTED CEILING PLAN KEY NOTES	DETAIL
301	EXPOSED DUCTWORK, PAINTED	SEE MECH.
302	GYPSUM BOARD SOFFIT - PAINTED	A10.9.4
303	ACCESS PANEL	N4 / A10.9.4
304	BASKETBALL BACKSTOPS	SEE SPECS.
305	EXPOSED STEEL BEAM - PAINTED	SEE STRUCT.
306	PROJECTION SCREEN: RECESSED MOUNTED	E7 / A10.9.4
307	GYMNASIUM CURTAIN DIVIDER	SEE SPECS. & A11/A10.9.3
308	6X10 WOOD TRELLIS	N8&J1/A10.7.4
309	FOLDING PANEL PARTITION	A14&J14/A10.9.4
310	EXTERIOR PLASTER CEILING CONTROL JOINT	N4/ A10.6
311	EXTERIOR PLASTER SOFFIT VENT	A11/A10.9.4
312	SEISMIC EXPANSION JOINT, FIRE RESISTIVE	E7/A10.5.3
313	PERFORATED CEILING VENT, 4" W x 22" L @ 24" o.c.	E11/A10.9.4

REFLECTED CEILING PLAN NOTES

1. FOR TYPICAL SYMBOLS AND ABBREVIATIONS, REFER TO SHEET G1.2
2. FOR TYPICAL CEILING NOTES AND DETAILS, SEE SHEETS A10.9.2, A10.9.3 & A10.9.4
3. ALL EXPOSED DUCTWORK TO BE PAINTED .
4. ALL SUSPENDED CEILING GRID SYSTEMS SHALL BE CENTERED IN SPACES AS SHOWN, U.N.O.
5. LIGHT FIXTURES AND MECHANICAL REGISTERS ARE SHOWN FOR LOCATION PURPOSES ONLY. REFER TO ELEC. & MECH. DWGS FOR ADDITIONAL INFORMATION
6. PROVIDE CEILING ACCESS PANELS AT HARD CEILINGS WHERE REQ'D TO ACCESS PLUMBING & MECHANICAL CONTROLS & WHEN ATTIC HEAD ROOM IS >30" (SEE DETAIL N4/A10.9.4)
7. SEISMIC SWAY BRACING NOT SHOWN FOR CLARITY. PROVIDE SWAY BRACING IN TWO DIRECTIONS AT 90° FOR ANY PENDENT MOUNTED LIGHT FIXTURE, SUSPENDED DUCTWORK, PIPES, CONDUITS, ETC., THAT WILL NOT SWING FREE AND CLEAR TO 45° IN ANY DIRECTION. SEE TYPICAL PENDANT LIGHT SWAY BRACE DETAILS A7/A10.9.2

REFLECTED CEILING PLAN LEGEND

- SURFACE MOUNTED FIXTURE
- SURFACE MOUNTED INDUSTRIAL LIGHT FIXTURE
- 2' x 4' RECESSED FIXTURE
- PENDANT FIXTURE
- TUBULAR SKYLIGHT DIFFUSER
- PENDANT LIGHT FIXTURE
- RECESSED DOWN LIGHT
- RECESSED DOWN LIGHT
- WALL MOUNTED FIXTURE
- RECESSED WALL FIXTURE
- RECESSED FIXTURE
- LIGHT COVE
- SA / RA — MECHANICAL REGISTERS REFER TO MECHANICAL DRAWINGS FOR REGISTER SIZES
- SA / EXH — EXIT SIGN SOLID LINES INDICATE THE LOCATIONS OF ILLUMINATION WITH EXIT DIRECTIONAL ARROW
- CEILING ACCESS PANEL REFER TO SHEET & MECHANICAL DRAWINGS
- SUSPENDED T-BAR CEILING SYSTEM WITH 2'-0" x 4'-0" CEILING TILES, SEE SHEET A10.9.2
- O.T.S. — NO FINISH CEILING EXPOSED TO STRUCTURE ABOVE
- EXTERIOR PLASTER SEE SHEET A10.9.4
- SUSPENDED GYPSUM BOARD CEILING SYSTEM, SEE SHEET A10.9.3
- FRAMED GYPSUM BOARD CEILING SEE SHEET A10.9.4
- ACOUSTICAL CEILING TREATMENT (TECTUM) E11/ A10.9.2

Key Plan

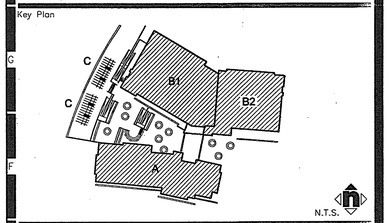

Consultant's Seal

Agency Approval

Project Title

CITY OF RIVERSIDE

ORANGE TERRACE LIBRARY / COMMUNITY CENTER

PLAN CHECK NO. 07-1397

20010 ORANGE TERRACE PARKWAY
RIVERSIDE, CA 92508

HMC ARCHITECTS

No.	Revisions/Submissions	Date:
	Design Development Submittal	12/18/06
	Building Department Submittal	03/20/07
1	Building Department Resubmittal	05/22/07
2	Building Department Resubmittal / QA QC Review	06/22/07

Drawing Title

BUILDING 'B1' REFLECTED CLG. PLAN - SEGMENT A

Architect's Seal

LICENSED ARCHITECT CHRISTOPHER RICHARD TAYLOR NO. VC-19758 REN. 02-24-09 STATE OF CALIFORNIA

Designed: SS		Project No.	2340001
Drawn: SS/XL		Scale:	AS NOTED
Checked: LP		Drawing No.	AB3.1A
Reviewed: RS			
Date: 06-22-07		Sheet	of #

BUILDING 'B1' REFLECTED CEILING PLAN - SEGMENT A | A1 | 1/8" = 1'-0"

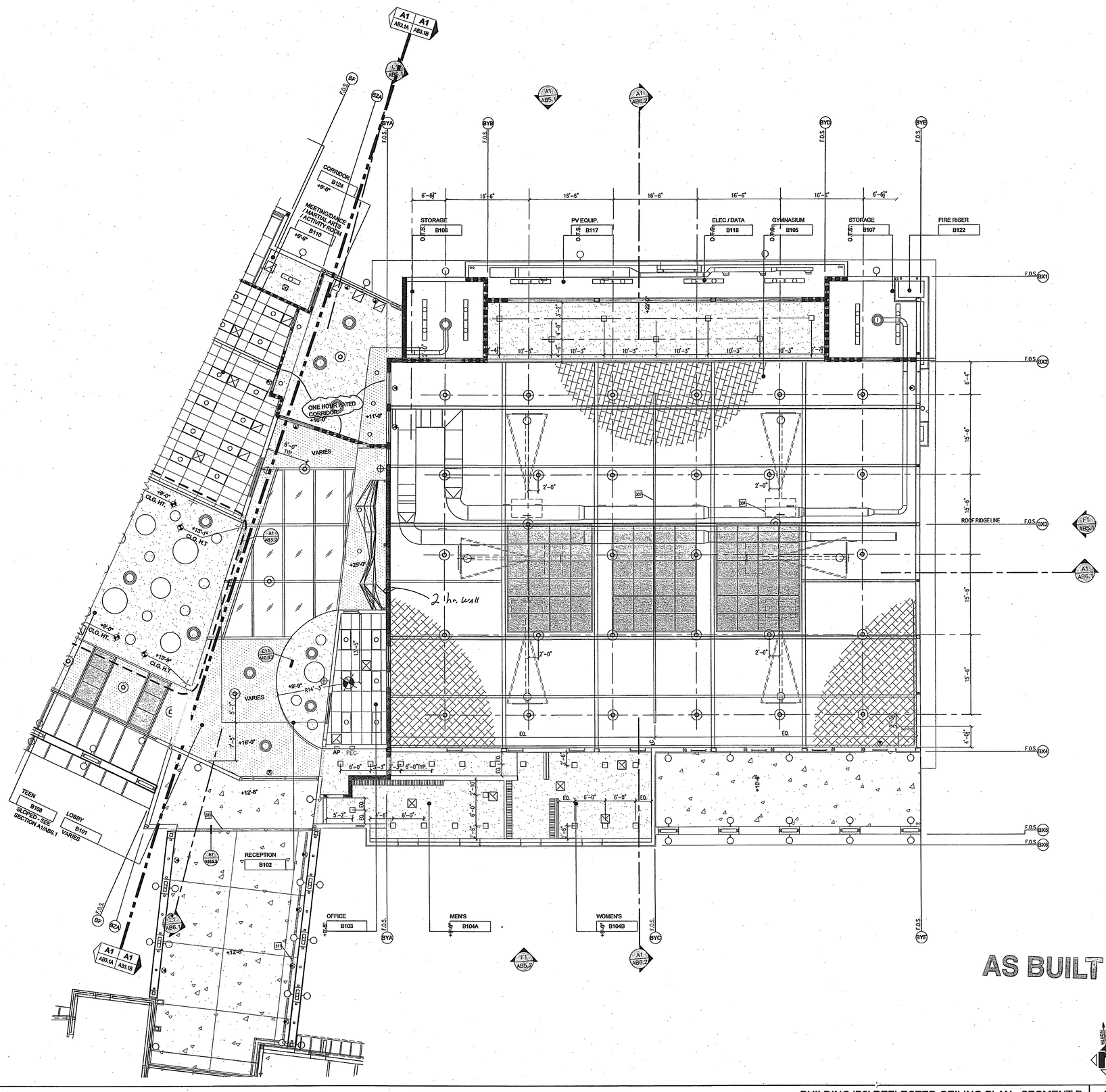

HMC ARCHITECTS
Architecture Interiors Planning
3546 CONCOURS STREET
ONTARIO, CALIFORNIA 91764
Telephone: 909 . 989 . 9979
Fax: 909 . 483 . 1400
www. hmcarchitects .com

REFLECTED CEILING PLAN KEY NOTES

		DETAIL
301	EXPOSED DUCTWORK, PAINTED	SEE MECH.
302	GYPSUM BOARD SOFFIT - PAINTED	A10.9.4
303	ACCESS PANEL	N4 / A10.9.4
304	BASKETBALL BACKSTOPS	SEE SPECS.
305	EXPOSED STEEL BEAM - PAINTED	SEE STRUCT.
306	PROJECTION SCREEN: RECESSED MOUNTED	E7 / A10.9.4
307	GYMNASIUM CURTAIN DIVIDER	SEE SPECS. & A11/A10.9.3
308	6X10 WOOD TRELLIS	N8&J1/A10.7.4
309	FOLDING PANEL PARTITION	A14&J14/A10.9.4
310	EXTERIOR PLASTER CEILING CONTROL JOINT	N4/ A10.6
311	EXTERIOR PLASTER SOFFIT VENT	A11/A10.9.4
312	SEISMIC EXPANSION JOINT, FIRE RESISTIVE	E7/A10.5.3
313	PERFORATED CEILING VENT, 4" W x 22" L @ 24" o.c.	E11/A10.9.4

REFLECTED CEILING PLAN NOTES

1. FOR TYPICAL SYMBOLS AND ABBREVIATIONS, REFER TO SHEET G1.2
2. FOR TYPICAL CEILING NOTES AND DETAILS, SEE SHEETS A10.9.2, A10.9.3 & A10.9.4
3. ALL EXPOSED DUCTWORK TO BE PAINTED
4. ALL SUSPENDED CEILING GRID SYSTEMS SHALL BE CENTERED IN SPACES AS SHOWN, U.N.O.
5. LIGHT FIXTURES AND MECHANICAL REGISTERS ARE SHOWN FOR LOCATION PURPOSES ONLY. REFER TO ELEC. & MECH. DWGS FOR ADDITIONAL INFORMATION
6. PROVIDE CEILING ACCESS PANELS AT HARD CEILINGS WHERE REQ'D TO ACCESS PLUMBING & MECHANICAL CONTROLS & WHEN ATTIC HEAD ROOM IS >30" (SEE DETAIL N4/A10.9.4)
7. SEISMIC SWAY BRACING NOT SHOWN FOR CLARITY. PROVIDE SWAY BRACING IN TWO DIRECTIONS AT 90° FOR ANY PENDENT MOUNTED LIGHT FIXTURE, SUSPENDED DUCTWORK, PIPES, CONDUITS, ETC., THAT WILL NOT SWING FREE AND CLEAR TO 45° IN ANY DIRECTION. SEE TYPICAL PENDANT LIGHT SWAY BRACE DETAILS A7/A10.9.2

REFLECTED CEILING PLAN LEGEND

- SURFACE MOUNTED FIXTURE
- SURFACE MOUNTED INDUSTRIAL LIGHT FIXTURE
- 2' x 4' RECESSED FIXTURE
- PENDANT FIXTURE
- TUBULAR SKYLIGHT DIFFUSER
- PENDANT LIGHT FIXTURE
- RECESSED DOWN LIGHT
- RECESSED DOWN LIGHT
- WALL MOUNTED FIXTURE
- RECESSED WALL FIXTURE
- RECESSED FIXTURE
- LIGHT COVE
- SA / RA — MECHANICAL REGISTERS REFER TO MECHANICAL DRAWINGS FOR REGISTER SIZES
- SA / EXH — EXIT SIGN SOLID LINES INDICATE THE LOCATIONS OF ILLUMINATION WITH EXIT DIRECTIONAL ARROW
- CEILING ACCESS PANEL REFER TO SHEET & MECHANICAL DRAWINGS
- SUSPENDED T-BAR CEILING SYSTEM WITH 2'-0" x 4'-0" CEILING TILES, SEE SHEET A10.9.2
- O.T.S. — NO FINISH CEILING EXPOSED TO STRUCTURE ABOVE
- EXTERIOR PLASTER SEE SHEET A10.9.4
- SUSPENDED GYPSUM BOARD CEILING SYSTEM, SEE SHEET A10.9.3
- FRAMED GYPSUM BOARD CEILING SEE SHEET A10.9.4
- ACOUSTICAL CEILING TREATMENT (TECTUM) E11/A10.9.2

Key Plan

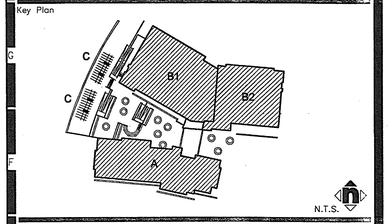

Consultant's Seal

Agency Approval

Project Title

CITY OF RIVERSIDE

ORANGE TERRACE LIBRARY / COMMUNITY CENTER

PLAN CHECK NO. 07-1397

20010 ORANGE TERRACE PARKWAY
RIVERSIDE, CA 92508

HMC ARCHITECTS

No.	Revisions/Submissions	Date:
	Design Development Submittal	12/18/06
	Building Department Submittal	03/29/07
1	Building Department Resubmittal	05/22/07
2	Building Department Resubmittal / QA QC Review	06/22/07

Drawing Title

BUILDING 'B2' REFLECTED CLG. PLAN - SEGMENT B

Architect's Seal

LICENSED ARCHITECT — STEPHEN PHOENIX TAYLOR — NO. C-18758 — REN. 02-24-09 — STATE OF CALIFORNIA

Designed:	SS	Project No.	2340001
Drawn:	SS/XL	Scale:	AS NOTED
Checked:	LP	Drawing No.	AB3.1B
Reviewed:	RS		
Date:	06-22-07	Sheet	of #

BUILDING 'B2' REFLECTED CEILING PLAN - SEGMENT B | A1 | 1/8" = 1'-0"

File Name: \\ont-e2\projects\2005 Jobs\2340 City of Riverside - Diffenbaugh\001-000\18-CAD\Sheets\AB3.1A-3.1B BUILDING B REFLECTED CEILING PLAN - SEGMENT A & B.dwg Jun 21,2007-1:10pm

PLEASE RECYCLE

AB3.1A-3.1B BUILDING B REFLECTED CEILING PLAN - SEGMENT A & B.DWG

HMC ARCHITECTS
Architecture Interiors Planning
3546 CONCOURS STREET
ONTARIO, CALIFORNIA 91764
Telephone: 909 . 989 . 9979
Fax: 909 . 483 . 1400
www. hmcarchitects .com

F	REFLECTED CEILING PLAN KEY NOTES	DETAIL
301	EXPOSED DUCTWORK, PAINTED	SEE MECH.
302	GYPSUM BOARD SOFFIT - PAINTED	A10.9.4
303	ACCESS PANEL	N4 / A10.9.4
304	BASKETBALL BACKSTOPS	SEE SPECS.
305	EXPOSED STEEL BEAM - PAINTED	SEE STRUCT.
306	PROJECTION SCREEN: RECESSED MOUNTED	E7 / A10.9.4
307	GYMNASIUM CURTAIN DIVIDER	SEE SPECS. & A11/A10.9.3
308	6X10 WOOD TRELLIS	N8&J1/A10.7.4
309	FOLDING PANEL PARTITION	A14&J14/A10.9.4
310	EXTERIOR PLASTER CEILING CONTROL JOINT	N4/ A10.6
311	EXTERIOR PLASTER SOFFIT VENT	A11/A10.9.4
312	SEISMIC EXPANSION JOINT, FIRE RESISTIVE	E7/A10.5.3
313	PERFORATED CEILING VENT, 4" W x 22" L @ 24" o.c.	E11/A10.9.4

REFLECTED CEILING PLAN NOTES

1. FOR TYPICAL SYMBOLS AND ABBREVIATIONS, REFER TO SHEET G1.2
2. FOR TYPICAL CEILING NOTES AND DETAILS, SEE SHEETS A10.9.2, A10.9.3 & A10.9.4
3. ALL EXPOSED DUCTWORK TO BE PAINTED
4. ALL SUSPENDED CEILING GRID SYSTEMS SHALL BE CENTERED IN SPACES AS SHOWN, U.N.O.
5. LIGHT FIXTURES AND MECHANICAL REGISTERS ARE SHOWN FOR LOCATION PURPOSES ONLY. REFER TO ELEC. & MECH. DWGS FOR ADDITIONAL INFORMATION
6. PROVIDE CEILING ACCESS PANELS AT HARD CEILINGS WHERE REQ'D TO ACCESS PLUMBING & MECHANICAL CONTROLS & WHEN ATTIC HEAD ROOM IS >30" (SEE DETAIL N4/A10.9.4)
7. SEISMIC SWAY BRACING NOT SHOWN FOR CLARITY. PROVIDE SWAY BRACING IN TWO DIRECTIONS AT 90° FOR ANY PENDENT MOUNTED LIGHT FIXTURE, SUSPENDED DUCTWORK, PIPES, CONDUITS, ETC., THAT WILL NOT SWING FREE AND CLEAR TO 45° IN ANY DIRECTION. SEE TYPICAL PENDANT LIGHT SWAY BRACE DETAILS A7/A10.9.2

REFLECTED CEILING PLAN LEGEND

- SURFACE MOUNTED FIXTURE
- SURFACE MOUNTED INDUSTRIAL LIGHT FIXTURE
- 2' x 4' RECESSED FIXTURE
- PENDANT FIXTURE
- TUBULAR SKYLIGHT DIFFUSER
- PENDANT LIGHT FIXTURE
- RECESSED DOWN LIGHT
- RECESSED DOWN LIGHT
- WALL MOUNTED FIXTURE
- RECESSED WALL FIXTURE
- RECESSED FIXTURE
- LIGHT COVE
- SA / SA / RA / EXH — MECHANICAL REGISTERS REFER TO MECHANICAL DRAWINGS FOR REGISTER SIZES
- EXIT SIGN SOLID LINES INDICATE THE LOCATIONS OF ILLUMINATION WITH EXIT DIRECTIONAL ARROW
- CEILING ACCESS PANEL REFER TO SHEET & MECHANICAL DRAWINGS
- SUSPENDED T-BAR CEILING SYSTEM WITH 2'-0" x 4'-0" CEILING TILES, SEE SHEET A10.9.2
- O.T.S. — NO FINISH CEILING EXPOSED TO STRUCTURE ABOVE
- EXTERIOR PLASTER SEE SHEET A10.9.4
- SUSPENDED GYPSUM BOARD CEILING SYSTEM, SEE SHEET A10.9.3
- FRAMED GYPSUM BOARD CEILING SEE SHEET A10.9.4
- ACOUSTICAL CEILING TREATMENT (TECTUM) E11/A10.5.2

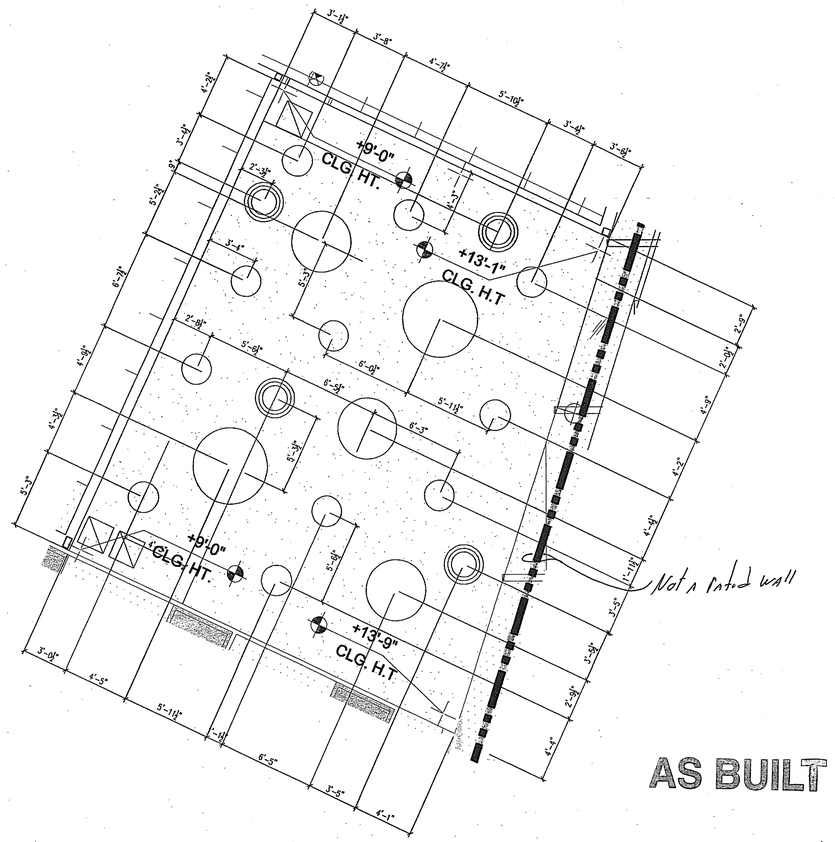

AS BUILT

Key Plan

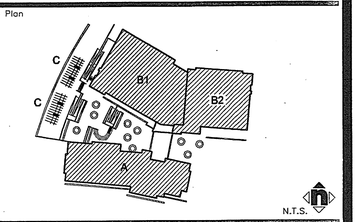

Consultant's Seal

Agency Approval

Project Title

ORANGE TERRACE LIBRARY / COMMUNITY CENTER
PLAN CHECK NO. 07-1397

20010 ORANGE TERRACE PARKWAY
RIVERSIDE, CA 92508

CITY OF RIVERSIDE

HMC ARCHITECTS

No.	Revisions/Submissions	Date:
	Design Development Submittal	12/18/06
	Building Department Submittal	03/29/07
1	Building Department Resubmittal	05/22/07
2	Building Department Resubmittal / QA QC Review	06/22/07

Drawing Title

BUILDING 'B' ENLARGED REFLECTED CLG. PLAN

Architect's Seal

LICENSED ARCHITECT — CHRISTOPHER PAUL LEE — LICENSE NO. C-19759 — REN. 02-24-08 — STATE OF CALIFORNIA

Designed: SS		Project No.	2340001
Drawn: SS/XL		Scale:	AS NOTED
Checked: LP		Drawing No.	AB3.2
Reviewed: RS		Sheet	of ##
Date: 06-22-07			

BUILDING 'B1' ENLARGED REFLECTED CEILING PLAN | A1 | 1/4" = 1'-0"

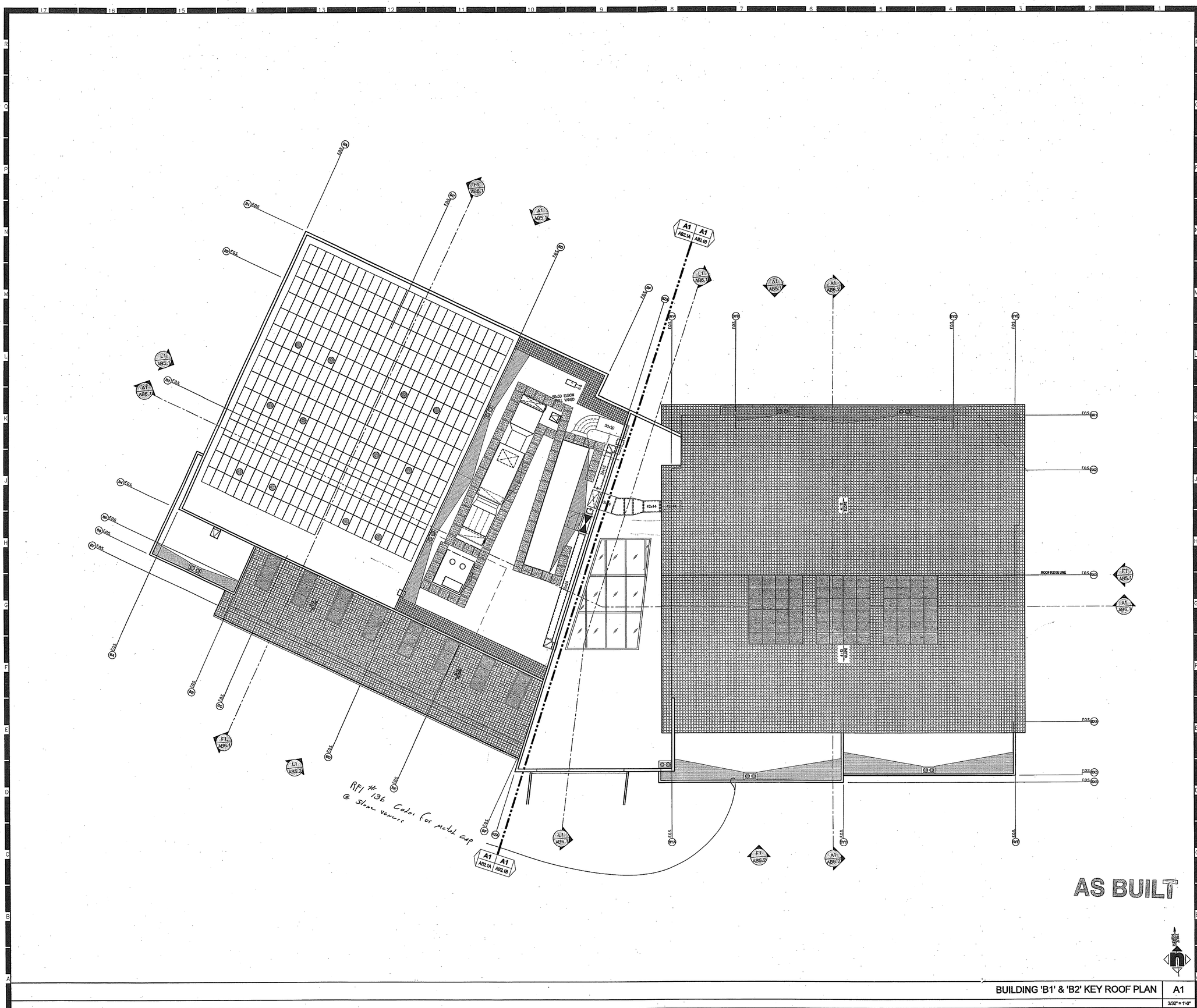

HMC ARCHITECTS
Architecture Interiors Planning
3546 CONCOURS STREET
ONTARIO, CALIFORNIA 91764
Telephone: 909 . 989 . 9979
Fax: 909 . 483 . 1400
www. hmcarchitects .com

#	ROOF PLAN KEY NOTES	DETAIL
401	CLAY ROOFING TILE	A10.7.2
402	MEMBRANE ROOFING - SEE GENERAL NOTE 7 BELOW.	A10.7.3
403	SHEET METAL FLASHING W/ WATERPROOF MEMBRANE BELOW	
404	GUTTER	E4 / A10.7.2
405	DOWNSPOUT	E1 / A10.7.4
406	ROOF DRAIN - PER PLUMBING DWGS.	A9 / A10.7.4
407	TUBULAR SKYLIGHT	A14 / A10.7.2
408	MECHANICAL UNIT	SEE MECH.
409	CONCRETE SPLASH BOX	E14 / A10.7.4
410	CRICKET	
411	SLOPED GLAZING SYSTEM / SKYLIGHT	
412	ROOF HATCH	E11 / A10.7.3
413	6X10 WOOD TRELLIS	N8 & J1 / A10.7.4
414	EXPOSED WOOD BEAM	SEE STRUCT.
415	STRUCTURAL BRACING	SEE STRUCT.
416	LINE OF WALL BELOW	
417	6" ROOF / WALL EXPANSION / SEISMIC JOINT	E7 / A10.5.3
418	METAL FRAMED SKYLIGHTS	DETAIL
419	FLAT ROOF PHOTOVOLTAIC SYSTEM	SEE PV101
420	ROOF LADDER	J11 / A10.7.3
421	DUCTWORK PENETRATION THRU EXTERIOR WALL	J4 / A10.5.2
422	CONCRETE FLOOR TOPPING, SEE STRUCTURAL	N1 / A10.7.4
423	ROOF TRAFFIC PAD	A1 / A10.7.3

ROOF PLAN GENERAL NOTES

1. MECHANICAL AND PLUMBING EQUIPMENT LOCATIONS ARE APPROXIMATE, REFER TO PLUMBING, MECHANICAL AND STRUCTURAL DRAWINGS FOR ADDITIONAL INFORMATION. COORDINATE WITH PLUMBING, MECHANICAL AND STRUCTURAL DISCIPLINES FOR EXACT LOCATIONS AND DIMENSIONS PRIOR TO FABRICATION AND INSTALLATION.
2. ALL MECHANICAL EQUIPMENT SHALL BE INSTALLED LEVEL AND TRUE.
3. FOR TYPICAL PIPE PENETRATION AT ROOFING DETAIL, SEE ROOFING DETAILS SHEETS A10.7.2, A10.7.3, & A10.7.4.
4. FOR TYPICAL OVERFLOW DRAIN OUTLET DETAIL, SEE A9/ A10.7.4.
5. CONSTRUCT ALL ROOF CRICKETS TO PROVIDE A 1/2" PER 1'-0" MINIMUM ROOF SLOPE TOWARDS ROOF DRAIN, SCUPPER OR GUTTER.
6. LOCATION OF TUBULAR SKYLIGHTS ARE APPROXIMATE, ROOF OPENINGS SHALL OCCUR BETWEEN ROOF FRAMING MEMBERS. REFER TO STRUCT. DWGS. FOR ADDITONAL INFORMATION.
7. MEMBRANE ROOFING SHALL BE MECHANICALLY ATTACHED, U.N.O. (SEE NOTE #7).
8. MEMBRANE ROOFING SHALL BE FULLY ADHERED AT FLAT ROOF PHOTOVOLTIAC PANELS LOCATIONS (BETWEEN GRIDLINES "BA" & "BD").

ROOF PLAN LEGEND

- CRICKET
- ROOF TRAFFIC PAD SEE A1/A10.7.3
- PHOTOVOLTAIC PANEL
- CLAY TILE ROOFING
- ROOF & OVERFLOW DRAIN SEE A9/A10.7.4
- ROOF HATCH SEE E11/A10.7.3

ABBREVATIONS

T.O.CRI	TOP OF CRICKET
T. O. SHTG	TOP OF PLYWOOD SHEATHING
L. P. SHTG	LOW POINT OF PLYWOOD SHEATHING
H. P. SHTG	HIGH POINT OF PLYWOOD SHEATHING
T.O. PAR	TOP OF PARAPET
T. O. CONC.	TOP OF CONCRETE

Key Plan

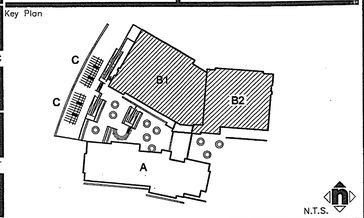

Consultant's Seal

Agency Approval

Project Title

CITY OF RIVERSIDE

ORANGE TERRACE LIBRARY / COMMUNITY CENTER

PLAN CHECK NO. 07-1397

20010 ORANGE TERRACE PARKWAY
RIVERSIDE, CA 92508

HMC ARCHITECTS

No.	Revisions/Submissions	Date:
	Design Development Submittal	12/18/06
	Building Department Submittal	03/29/07
1	Building Department Resubmittal	05/22/07
2	Building Department Resubmittal / QA QC Review	06/22/07

Drawing Title

BUILDING 'B1' & 'B2' KEY ROOF PLAN

Architect's Seal

CHRISTOPHER RICHARD SNYDER
LICENSED ARCHITECT
REG. 02-24-09
NO. C-19759
STATE OF CALIFORNIA

Designed: SS	Project No. 2340001
Drawn: XL	Scale: AS NOTED
Checked: LP	Drawing No.
Reviewed: RS	AB4.0
Date: 06-22-07	Sheet of 11

BUILDING 'B1' & 'B2' KEY ROOF PLAN | A1 | 3/32" = 1'-0"

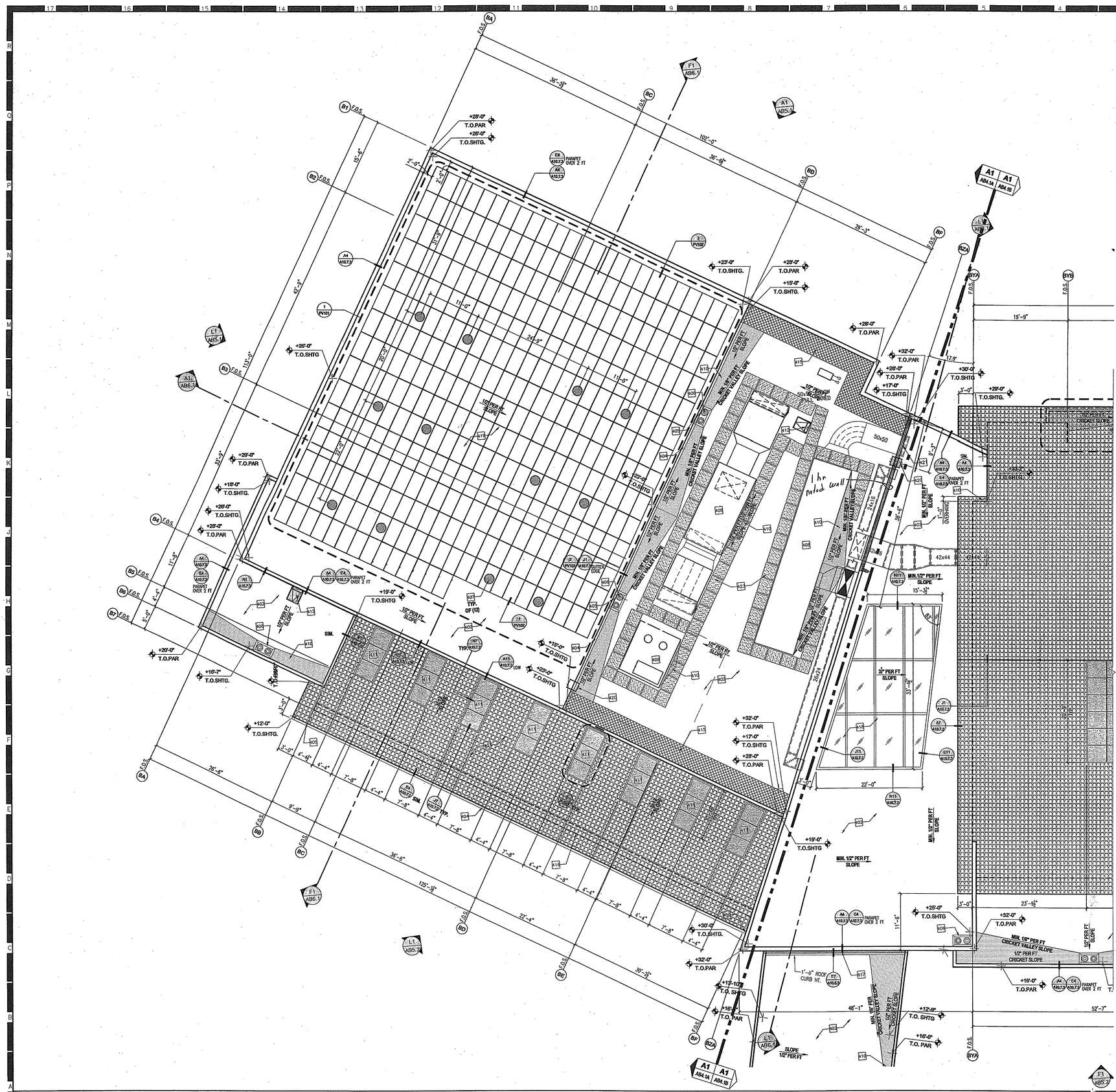

BUILDING 'B1' ROOF PLAN - SEGMENT A | A1 | 1/8" = 1'-0"

HMC ARCHITECTS
Architecture Interiors Planning
3546 CONCOURS STREET
ONTARIO, CALIFORNIA 91764
Telephone: 909 . 989 . 9979
Fax: 909 . 483 . 1400
www. hmcarchitects .com

#	ROOF PLAN KEY NOTES	DETAIL
K01	CLAY ROOFING TILE	A10.7.2
K02	MEMBRANE ROOFING - SEE GENERAL NOTE 7 BELOW.	A10.7.3
K03	SHEET METAL FLASHING W/ WATERPROOF MEMBRANE BELOW	
K04	GUTTER	E4 / A10.7.2
K05	DOWNSPOUT	E1 / A10.7.4
K06	ROOF DRAIN - PER PLUMBING DWGS.	A8 / A10.7.4
K07	TUBULAR SKYLIGHT	A14 / A10.7.2
K08	MECHANICAL UNIT	SEE MECH.
K09	CONCRETE SPLASH BOX	E14 / A10.7.4
K10	CRICKET	
K11	SLOPED GLAZING SYSTEM / SKYLIGHT	
K12	ROOF HATCH	E11 / A10.7.3
K13	6X10 WOOD TRELLIS	N8 & J1 / A10.7.4
K14	EXPOSED WOOD BEAM	SEE STRUCT.
K15	STRUCTURAL BRACING	SEE STRUCT.
K16	LINE OF WALL BELOW	
K17	8" ROOF / WALL EXPANSION / SEISMIC JOINT	E7 / A10.5.3
K18	METAL FRAMED SKYLIGHTS	DETAIL
K19	FLAT ROOF PHOTOVOLTAIC SYSTEM	SEE PV101
K20	ROOF LADDER	J11 / A10.7.3
K21	DUCTWORK PENETRATION THRU EXTERIOR WALL	J4 / A10.5.2
K22	CONCRETE FLOOR TOPPING, SEE STRUCTURAL	N1 / A10.7.4
K23	ROOF TRAFFIC PAD	A1 / A10.7.3

ROOF PLAN GENERAL NOTES

1. MECHANICAL AND PLUMBING EQUIPMENT LOCATIONS ARE APPROXIMATE, REFER TO PLUMBING, MECHANICAL AND STRUCTURAL DRAWINGS FOR ADDITIONAL INFORMATION. COORDINATE WITH PLUMBING, MECHANICAL AND STRUCTURAL DISCIPLINES FOR EXACT LOCATIONS AND DIMENSIONS PRIOR TO FABRICATION AND INSTALLATION.
2. ALL MECHANICAL EQUIPMENT SHALL BE INSTALLED LEVEL AND TRUE.
3. FOR TYPICAL PIPE PENETRATION AT ROOFING DETAIL, SEE ROOFING DETAILS SHEETS A10.7.2, A10.7.3, & A10.7.4.
4. FOR TYPICAL OVERFLOW DRAIN OUTLET DETAIL, SEE A8/A10.7.4.
5. CONSTRUCT ALL ROOF CRICKETS TO PROVIDE A 1/2" PER 1'-0" MINIMUM ROOF SLOPE TOWARDS ROOF DRAIN, SCUPPER OR GUTTER.
6. LOCATION OF TUBULAR SKYLIGHTS ARE APPROXIMATE, ROOF OPENINGS SHALL OCCUR BETWEEN ROOF FRAMING MEMBERS. REFER TO STRUCT. DWGS. FOR ADDITONAL INFORMATION.
7. MEMBRANE ROOFING SHALL BE MECHANICALLY ATTACHED, U.N.O. (SEE NOTE #7).
8. MEMBRANE ROOFING SHALL BE FULLY ADHERED AT FLAT ROOF PHOTOVOLTAIC PANELS LOCATIONS (BETWEEN GRIDLINES "BA" & "BD").

ROOF PLAN LEGEND

- CRICKET
- ROOF TRAFFIC PAD SEE A1/A10.7.3
- PHOTOVOLTAIC PANEL
- CLAY TILE ROOFING
- ROOF & OVERFLOW DRAIN SEE A8/A10.7.4
- ROOF HATCH SEE E11/A10.7.3

ABBREVATIONS

T.O.CRI	TOP OF CRICKET
T. O. SHTG	TOP OF PLYWOOD SHEATHING
L. P. SHTG	LOW POINT OF PLYWOOD SHEATHING
H. P. SHTG	HIGH POINT OF PLYWOOD SHEATHING
T. O. PAR	TOP OF PARAPET
T. O. CONC.	TOP OF CONCRETE

Key Plan

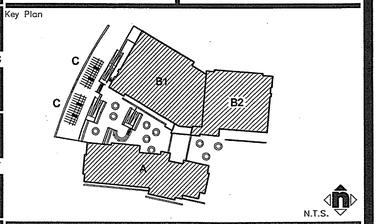

Consultant's Seal

Agency Approval

Project Title

CITY OF RIVERSIDE

ORANGE TERRACE LIBRARY / COMMUNITY CENTER

PLAN CHECK NO. 07-1397

20010 ORANGE TERRACE PARKWAY
RIVERSIDE, CA 92508

HMC ARCHITECTS

No.	Revisions/Submissions	Date:
	Design Development Submittal	12/18/06
	Building Department Submittal	03/29/07
1	Building Department Resubmittal	05/22/07
2	Building Department Resubmittal / QA QC Review	06/22/07

Drawing Title **BUILDING 'B1' ROOF PLAN - SEGMENT A**

Architect's Seal

LICENSED ARCHITECT
CHRISTOPHER J. GARRETT
NO. C-19739
REV. 02-24-09
STATE OF CALIFORNIA

Designed: SS	Project No. 2340001
Drawn: XL	Scale: AS NOTED
Checked: LP	Drawing No.
Reviewed: RS	AB4.1A
Date: 06-22-07	Sheet of ##

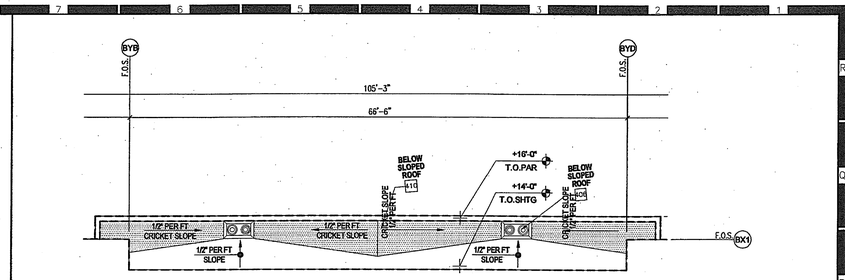

PARTIAL BUILDING 'B2' LOWER ROOF PLAN | N1

1/8" = 1'-0"

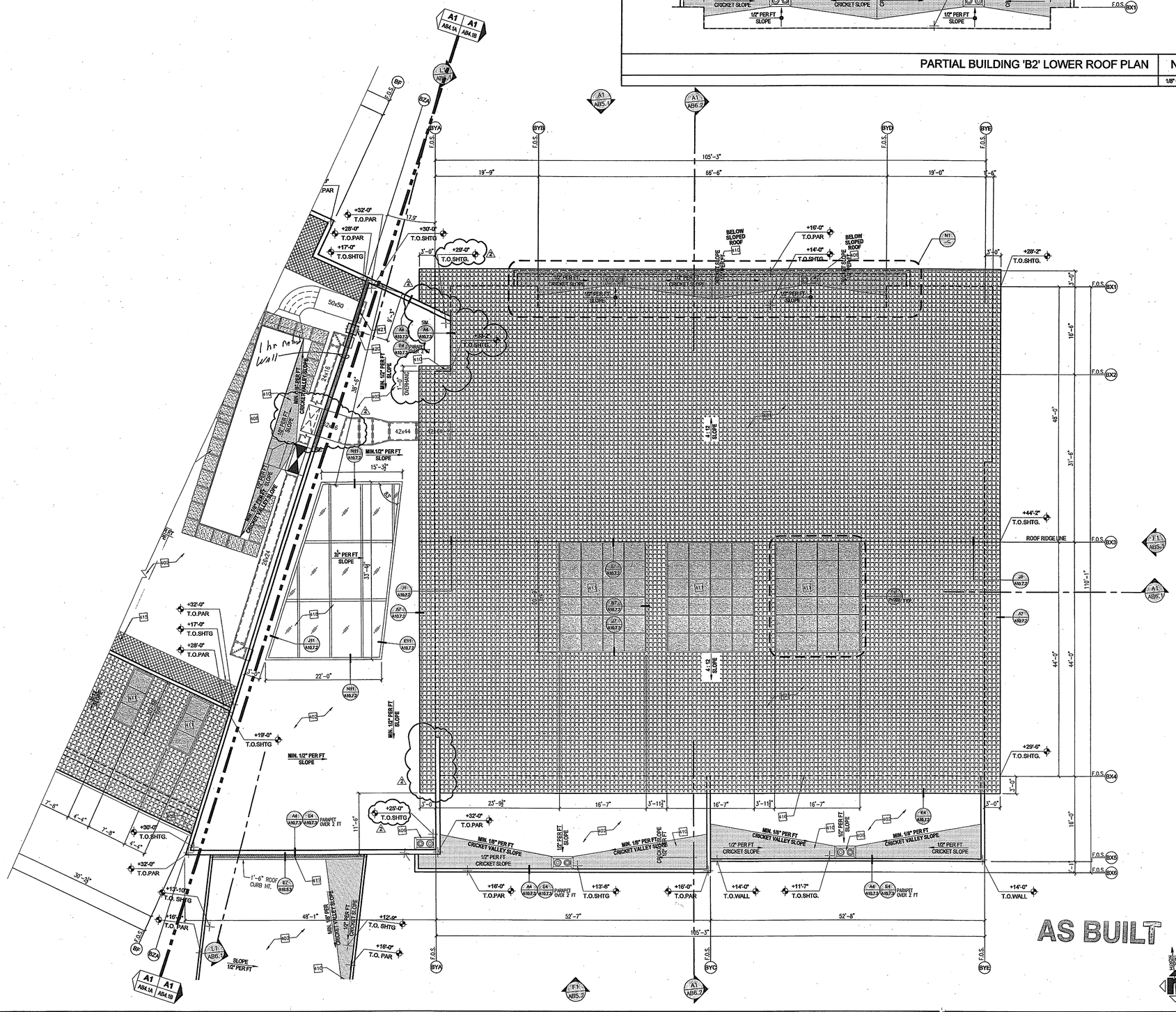

BUILDING 'B2' ROOF PLAN - SEGMENT B | A1

1/8" = 1'-0"

HMC ARCHITECTS
Architecture Interiors Planning
3546 CONCOURS STREET
ONTARIO, CALIFORNIA 91764
Telephone: 909 . 989 . 9979
Fax: 909 . 483 . 1400
www. hmcarchitects .com

#	ROOF PLAN KEY NOTES	DETAIL
801	CLAY ROOFING TILE	A10.7.2
802	MEMBRANE ROOFING - SEE GENERAL NOTE 7 BELOW.	A10.7.3
803	SHEET METAL FLASHING W/ WATERPROOF MEMBRANE BELOW	
804	GUTTER	E4 / A10.7.2
805	DOWNSPOUT	E1 / A10.7.4
806	ROOF DRAIN - PER PLUMBING DWGS.	A8 / A10.7.4
807	TUBULAR SKYLIGHT	A14 / A10.7.2
808	MECHANICAL UNIT	SEE MECH.
809	CONCRETE SPLASH BOX	E14 / A10.7.4
810	CRICKET	
811	SLOPED GLAZING SYSTEM / SKYLIGHT	
812	ROOF HATCH	E11 / A10.7.3
813	6X10 WOOD TRELLIS	N8 & J1 / A10.7.4
814	EXPOSED WOOD BEAM	SEE STRUCT.
815	STRUCTURAL BRACING	SEE STRUCT.
816	LINE OF WALL BELOW	
817	6" ROOF / WALL EXPANSION / SEISMIC JOINT	E7 / A10.5.3
818	METAL FRAMED SKYLIGHTS	DETAIL
819	FLAT ROOF PHOTOVOLTAIC SYSTEM	SEE PV101
820	ROOF LADDER	J11 / A10.7.3
821	DUCTWORK PENETRATION THRU EXTERIOR WALL	J4 / A10.5.2
822	CONCRETE FLOOR TOPPING, SEE STRUCTURAL	N1 / A10.7.4
823	ROOF TRAFFIC PAD	A1 / A10.7.3

ROOF PLAN GENERAL NOTES

1. MECHANICAL AND PLUMBING EQUIPMENT LOCATIONS ARE APPROXIMATE, REFER TO PLUMBING, MECHANICAL AND STRUCTURAL DRAWINGS FOR ADDITIONAL INFORMATION. COORDINATE WITH PLUMBING, MECHANICAL AND STRUCTURAL DISCIPLINES FOR EXACT LOCATIONS AND DIMENSIONS PRIOR TO FABRICATION AND INSTALLATION.
2. ALL MECHANICAL EQUIPMENT SHALL BE INSTALLED LEVEL AND TRUE.
3. FOR TYPICAL PIPE PENETRATION AT ROOFING DETAIL, SEE ROOFING DETAILS SHEETS A10.7.2, A10.7.3, & A10.7.4.
4. FOR TYPICAL OVERFLOW DRAIN OUTLET DETAIL, SEE A8/ A10.7.4.
5. CONSTRUCT ALL ROOF CRICKETS TO PROVIDE A 1/2" PER 1'-0" MINIMUM ROOF SLOPE TOWARDS ROOF DRAIN, SCUPPER OR GUTTER.
6. LOCATION OF TUBULAR SKYLIGHTS ARE APPROXIMATE, ROOF OPENINGS SHALL OCCUR BETWEEN ROOF FRAMING MEMBERS. REFER TO STRUCT. DWGS. FOR ADDITONAL INFORMATION.
7. MEMBRANE ROOFING SHALL BE MECHANICALLY ATTACHED, U.N.O. (SEE NOTE #7).
8. MEMBRANE ROOFING SHALL BE FULLY ADHERED AT FLAT ROOF PHOTOVOLTIAC PANELS LOCATIONS (BETWEEN GRIDLINES "BA" & "BD").

ROOF PLAN LEGEND

- CRICKET
- ROOF TRAFFIC PAD SEE A1/A10.7.3
- PHOTOVOLTAIC PANEL
- CLAY TILE ROOFING
- ROOF & OVERFLOW DRAIN SEE A8/A10.7.4
- ROOF HATCH SEE E11/A10.7.3

ABBREVATIONS

T.O.CRI	TOP OF CRICKET
T. O. SHTG	TOP OF PLYWOOD SHEATHING
L. P. SHTG	LOW POINT OF PLYWOOD SHEATHING
H. P. SHTG	HIGH POINT OF PLYWOOD SHEATHING
T.O. PAR	TOP OF PARAPET
T. O. CONC.	TOP OF CONCRETE

Key Plan

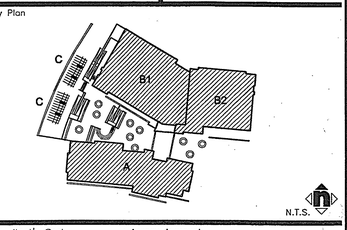

Consultant's Seal

Agency Approval

Project Title

ORANGE TERRACE LIBRARY / COMMUNITY CENTER

PLAN CHECK NO. 07-1397

20010 ORANGE TERRACE PARKWAY
RIVERSIDE, CA 92508

CITY OF RIVERSIDE

SM HMC ARCHITECTS

No.	Revisions/Submissions	Date:
	Design Development Submittal	12/18/06
	Building Department Submittal	03/29/07
1	Building Department Resubmittal	05/22/07
2	Building Department Resubmittal / QA QC Review	06/22/07

Drawing Title

BUILDING 'B2' ROOF PLAN - SEGMENT B

Architect's Seal

LICENSED ARCHITECT CHRISTOPHER R. TAYLOR NO. C-19759 REN. 02-24-09 STATE OF CALIFORNIA

Designed: SS	Project No. 2340001
Drawn: XL	Scale: AS NOTED
Checked: LP	Drawing No.
Reviewed: RS	AB4.1B
Date: 06-22-07	Sheet of ##

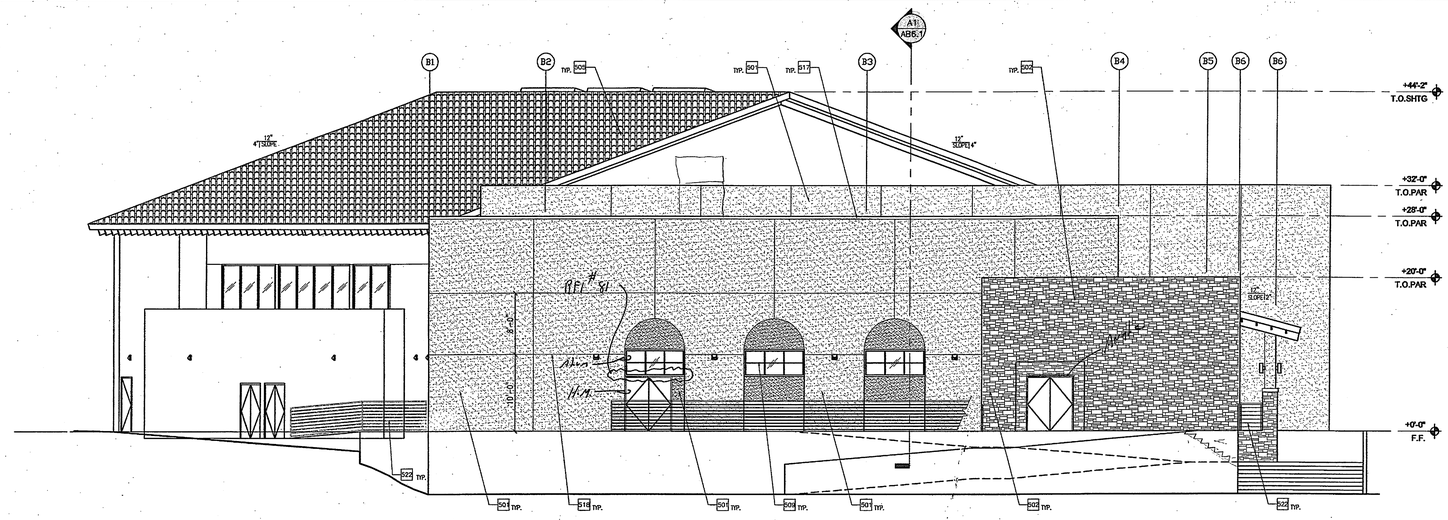

BUILDING 'B' WEST ELEVATION — L1

1/8" = 1'-0"

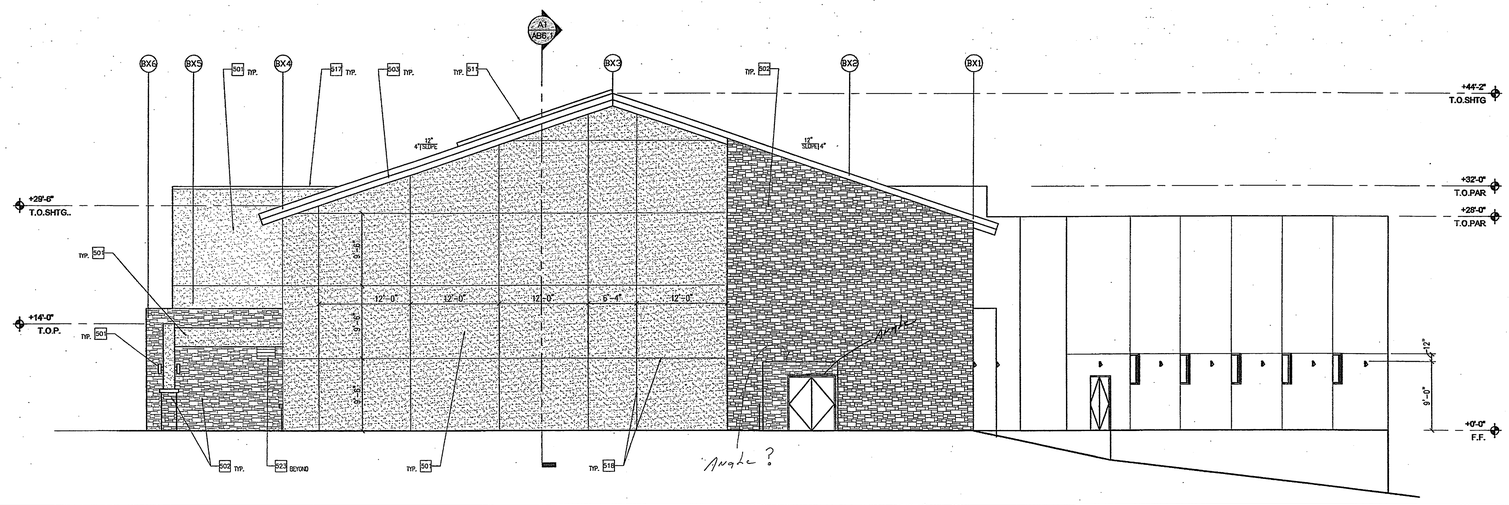

BUILDING 'B' EAST ELEVATION — F1

1/8" = 1'-0"

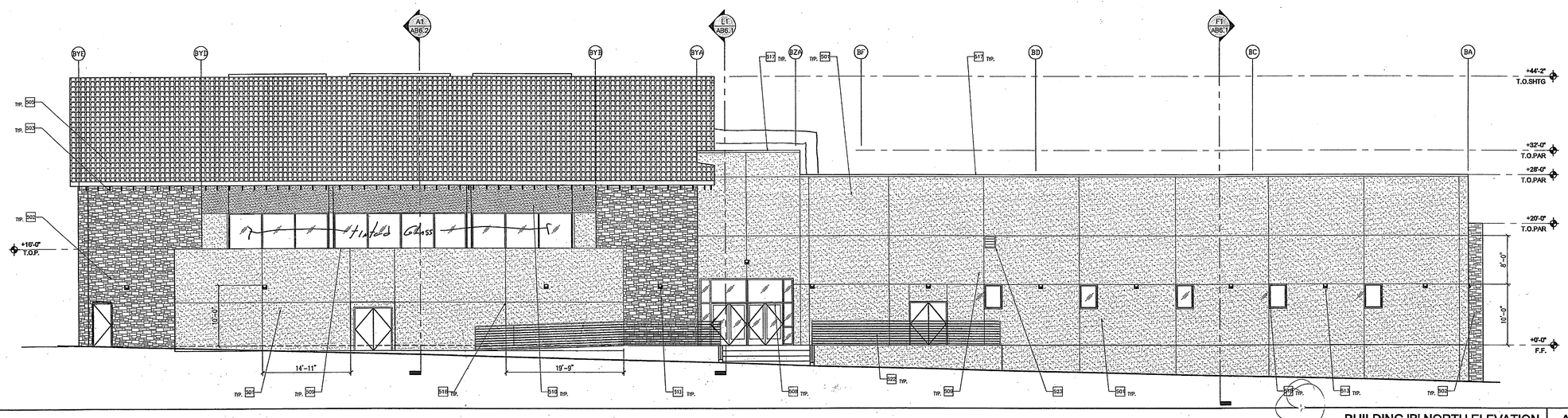

BUILDING 'B' NORTH ELEVATION — A1

1/8" = 1'-0"

HMC ARCHITECTS
Architecture Interiors Planning
3546 CONCOURS STREET
ONTARIO, CALIFORNIA 91764
Telephone: 909 . 989 . 9979
Fax: 909 . 483 . 1400
www. hmcarchitects .com

#	EXTERIOR ELEVATION KEY NOTES	DETAIL
501	EXTERIOR PLASTER	N1 / A10.5.1
502	CULTURED STONE	A1 / A10.5.2
503	EXPOSED WOOD FRAMING - PAINTED	SEE STRUCT.
504	EXTERIOR WOOD TRELLIS	J1 & N8 / A10.7.4
505	ROOFING TILE	A4 / A10.7.2
506	GUTTER	E4 / A10.7.2
507	DOWNSPOUT W/ CONCRETE SPLASH BOX	E1 & E14 / A10.7.4
508	ALUMINUM STOREFRONT SYSTEM	SEE WINDOW SCHEDULE
509	ALUMINUM WINDOW	SEE WINDOW SCHEDULE
510	STONE TRIM WAINSCOT	N1 / A10.5.2
511	PHOTOVOLTAIC SKYLIGHT	A10.7.2, SEE ROOF PLAN
512	STEEL COLUMN - PAINTED	SEE STRUCT.
513	LIGHT FIXTURE	SEE ELEC.
514	CAST-IN-PLACE CONCRETE WALL	SEE STRUCT.
515	ORNAMENTAL METAL FENCE	N4 / A10.2.4
516	ORNAMENTAL METAL GATE	SEE GATE SCHEDULE
517	SHEET METAL FLASHING W/ WATERPROOF MEMBRANE BELOW	
518	PLASTER CONTROL JOINT	N4 / A10.5.2
519	SIGNAGE	SEE DOOR SCHEDULE
520	SPEAKER	SEE ELEC.
521	METAL BUILDING SIGNAGE	A11 / A10.4.2
522	METAL GUARDRAIL	N11 / A10.2.4
523	EXTERIOR WALL LOUVER	J7 & E7 / A10.5.2, SEE MECH.
524	FIRE ALARM HORN / STROBE	SEE ELEC.
525	FIRE ALARM BELL	SEE ELEC.
526	METAL GRATE	
527	SKYLIGHT	SEE SPEC.

EXTERIOR ELEVATION KEYNOTES

1. FOR TYPICAL SYMBOLS AND ABBREVIATIONS, REFER TO SHEET G1.2
2. WHERE WALL ELEVATION IS NOT SHOWN, MATCH ADJACENT FINISH, COLOR, JOINT LOCATIONS ETC.
3. REFER TO DOOR AND WINDOW SCHEDULES FOR LOCATIONS, DIMENSIONS AND CONFIGURATIONS OF WINDOWS AND DOORS.
4. PROVIDE HORIZONTAL LATH NAILING AT ALL EXTERIOR SOFFITS PER DETAIL J1/A10.9.4

EXTERIOR ELEVATION LEGEND

- CLAY TILE ROOFING, SEE DETAIL SHEET
- STONE VENEER, SEE DETAIL SHEET
- EXTERIOR PLASTER, COLOR #1
- EXTERIOR PLASTER, COLOR #2

Key Plan

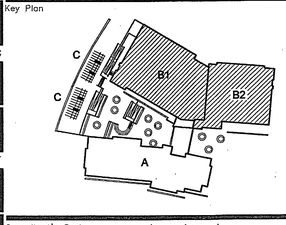

Consultant's Seal

Agency Approval

AS BUILT

Project Title

CITY OF RIVERSIDE

ORANGE TERRACE LIBRARY / COMMUNITY CENTER

PLAN CHECK NO. 07-1397

20010 ORANGE TERRACE PARKWAY
RIVERSIDE, CA 92508

HMC ARCHITECTS

No.	Revisions/Submissions	Date:
	Design Development Submittal	12/18/06
	Building Department Submittal	03/29/07
1	Building Department Resubmittal	05/22/07
2	Building Department Resubmittal / OA QC Review	06/22/07

Drawing Title

BUILDING 'B' EXTERIOR ELEVATIONS

Architect's Seal

LICENSED ARCHITECT — ANTHONY R. SCHIAVO — LICENSE NO. C-19759 — REN. 02-24-09 — STATE OF CALIFORNIA

Designed: SS	Project No. 2340001
Drawn: SS	Scale: AS NOTED
Checked: LP	Drawing No.
Reviewed: RS	AB5.1
Date: 06-22-07	Sheet 01 of ##

File Name: N:\2005 Jobs\2340 City of Riverside – Diffenbaugh\001-000\18-CAD\Sheets\AB5.1 BUILDING B EXTERIOR ELEVATIONS.dwg Jun 21,2007-1:04pm

PLEASE RECYCLE AB5.1 BUILDING B EXTERIOR ELEVATIONS.DWG

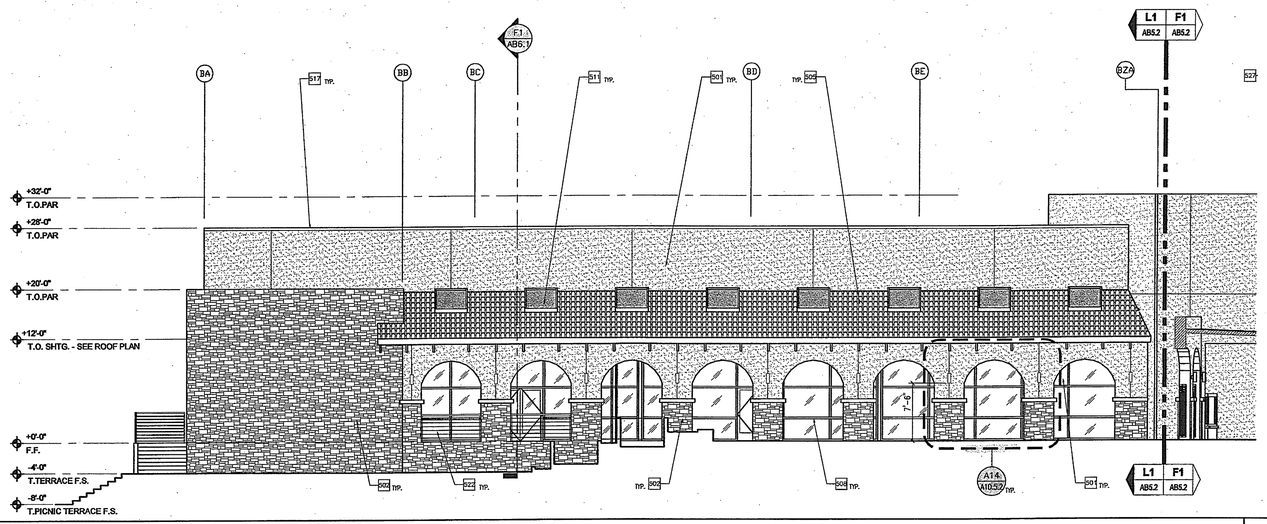

BUILDING 'B' SOUTH ELEVATION - SEGMENT WEST | L1

1/8" = 1'-0"

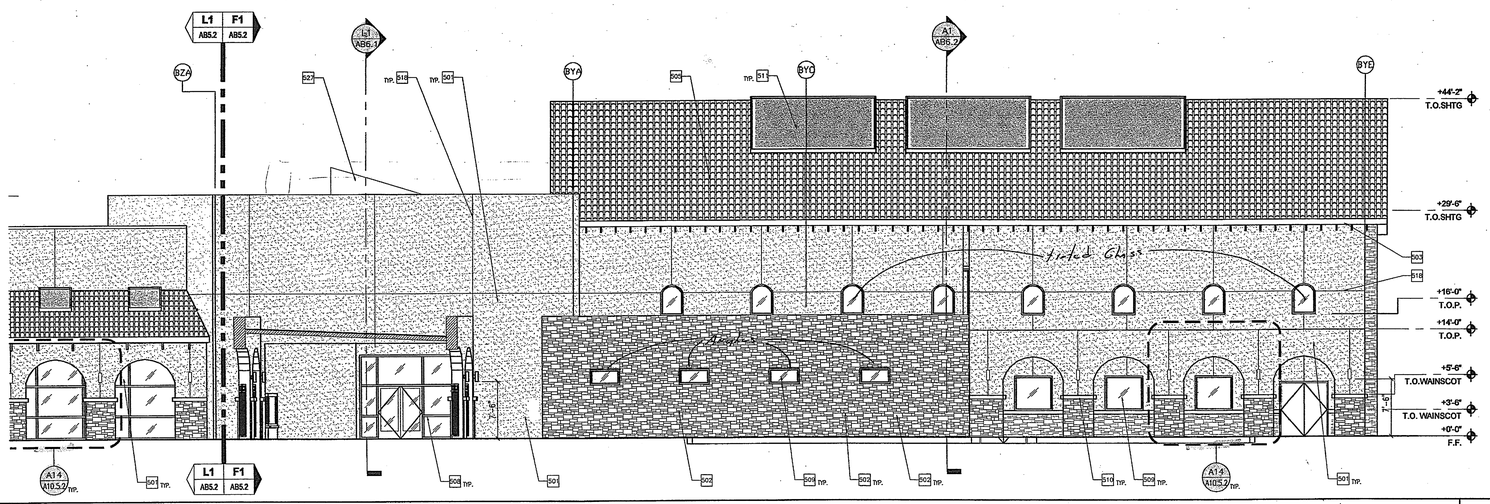

BUILDING 'B' SOUTH ELEVATION - SEGMENT EAST | F1

1/8" = 1'-0"

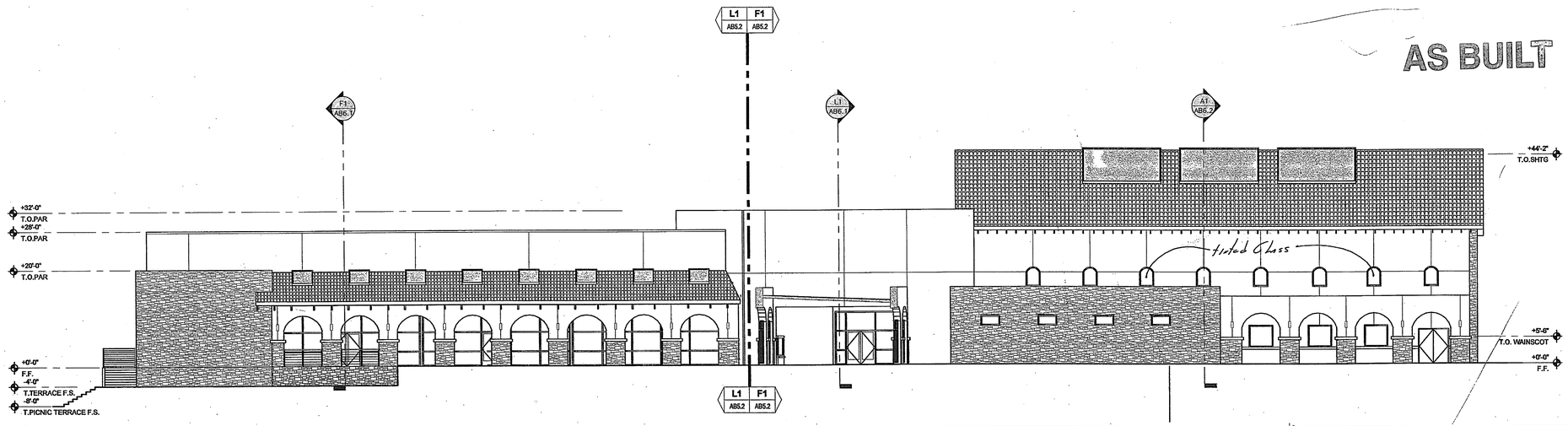

BUILDING 'B' KEY SOUTH ELEVATION | A1

3/32" = 1'-0"

HMC ARCHITECTS
Architecture Interiors Planning
3546 CONCOURS STREET
ONTARIO, CALIFORNIA 91764
Telephone: 909 . 989 . 9979
Fax: 909 . 483 . 1400
www. hmcarchitects .com

#	EXTERIOR ELEVATION KEY NOTES	DETAIL
501	EXTERIOR PLASTER	N1 / A10.5.1
502	CULTURED STONE	A1 / A10.5.2
503	EXPOSED WOOD FRAMING - PAINTED	SEE STRUCT.
504	EXTERIOR WOOD TRELLIS	J1 & N8 / A10.7.4
505	ROOFING TILE	A4 / A10.7.2
506	GUTTER	E4 / A10.7.2
507	DOWNSPOUT W/ CONCRETE SPLASH BOX	E1 & E14 / A10.7.4
508	ALUMINUM STOREFRONT SYSTEM	SEE WINDOW SCHEDULE
509	ALUMINUM WINDOW	SEE WINDOW SCHEDULE
510	STONE TRIM WAINSCOT	N1 / A10.5.2
511	PHOTOVOLTAIC SKYLIGHT	A10.7.2, SEE ROOF PLAN
512	STEEL COLUMN - PAINTED	SEE STRUCT.
513	LIGHT FIXTURE	SEE ELEC.
514	CAST-IN-PLACE CONCRETE WALL	SEE STRUCT.
515	ORNAMENTAL METAL FENCE	N4 / A10.2.4
516	ORNAMENTAL METAL GATE	SEE GATE SCHEDULE
517	SHEET METAL FLASHING W/ WATERPROOF MEMBRANE BELOW	
518	PLASTER CONTROL JOINT	N4 / A10.5.2
519	SIGNAGE	SEE DOOR SCHEDULE
520	SPEAKER	SEE ELEC.
521	METAL BUILDING SIGNAGE	A11 / A10.4.2
522	METAL GUARDRAIL	N11 / A10.2.4
523	EXTERIOR WALL LOUVER	J7 & E7 / A10.5.2, SEE MECH.
524	FIRE ALARM HORN / STROBE	SEE ELEC.
525	FIRE ALARM BELL	SEE ELEC.
526	METAL GRATE	
527	SKYLIGHT	SEE SPEC.

EXTERIOR ELEVATION KEYNOTES

1. FOR TYPICAL SYMBOLS AND ABBREVATIONS, REFER TO SHEET G1.2
2. WHERE WALL ELEVATION IS NOT SHOWN, MATCH ADJACENT FINISH, COLOR, JOINT LOCATIONS ETC.
3. REFER TO DOOR AND WINDOW SCHEDULES FOR LOCATIONS, DIMENSIONS AND CONFIGURATIONS OF WINDOWS AND DOORS.
4. PROVIDE HORIZONTAL LATH NAILING AT ALL EXTERIOR SOFFITS PER DETAIL J1/A10.9.4

EXTERIOR ELEVATION LEGEND

- CLAY TILE ROOFING, SEE DETAIL SHEET
- STONE VENEER, SEE DETAIL SHEET
- EXTERIOR PLASTER, COLOR #1
- EXTERIOR PLASTER, COLOR #2

Key Plan

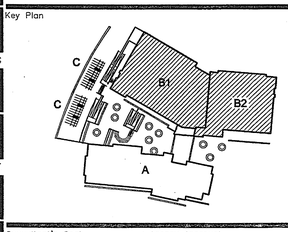

Consultant's Seal

Agency Approval

Project Title

CITY OF RIVERSIDE

ORANGE TERRACE LIBRARY / COMMUNITY CENTER

PLAN CHECK NO. 07-1397

20010 ORANGE TERRACE PARKWAY
RIVERSIDE, CA 92508

HMC ARCHITECTS

No.	Revisions/Submissions	Date:
	Design Development Submittal	12/18/06
	Building Department Submittal	03/29/07
1	Building Department Resubmittal	05/22/07
2	Building Department Resubmittal / QA QC Review	06/22/07

Drawing Title

BUILDING 'B' EXTERIOR ELEVATIONS

Architect's Seal

LICENSED ARCHITECT
CHRISTOPHER NORMAN TAYLOR
No. C-19959
REN. 02-31-08
STATE OF CALIFORNIA

Designed: SS	Project No. 2340001
Drawn: SS	Scale: AS NOTED
Checked: LP	Drawing No.
Reviewed: RS	AB5.2
Date: 06-22-07	Sheet of 11

File Name: N:\2005 Jobs\2340 City of Riverside - Diffenbaugh\001-000\18-CAD\Sheets\AB5.2 BUILDING B EXTERIOR ELEVATIONS.dwg Jun 21,2007-1:03pm

PLEASE RECYCLE AB5.2 BUILDING B EXTERIOR ELEVATIONS.DWG

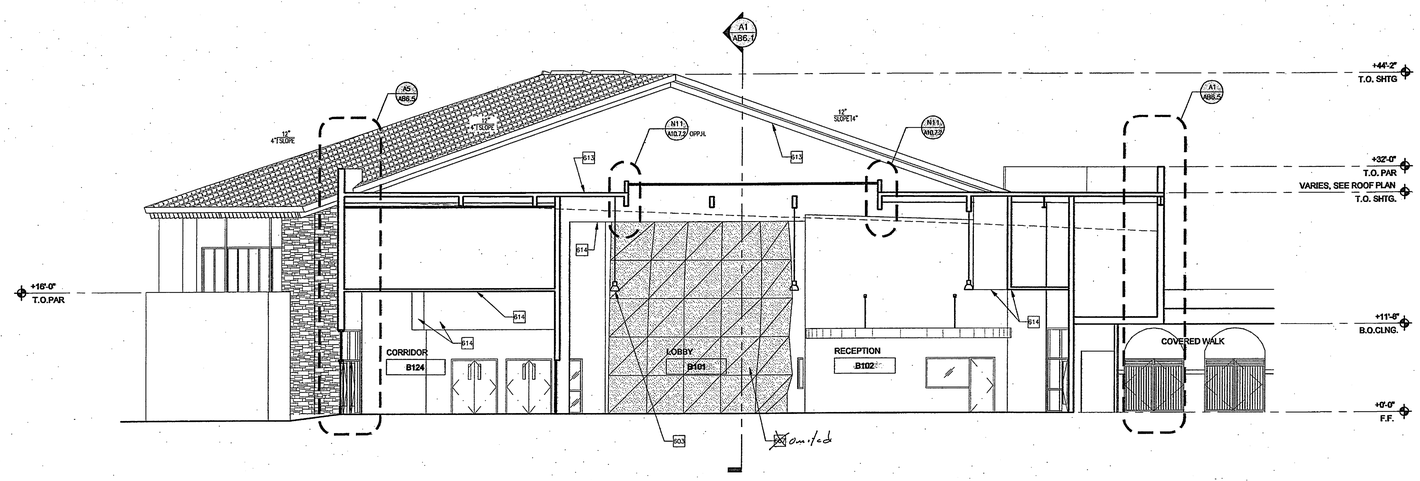

BUILDING 'B' SECTION | L1

1/8" = 1'-0"

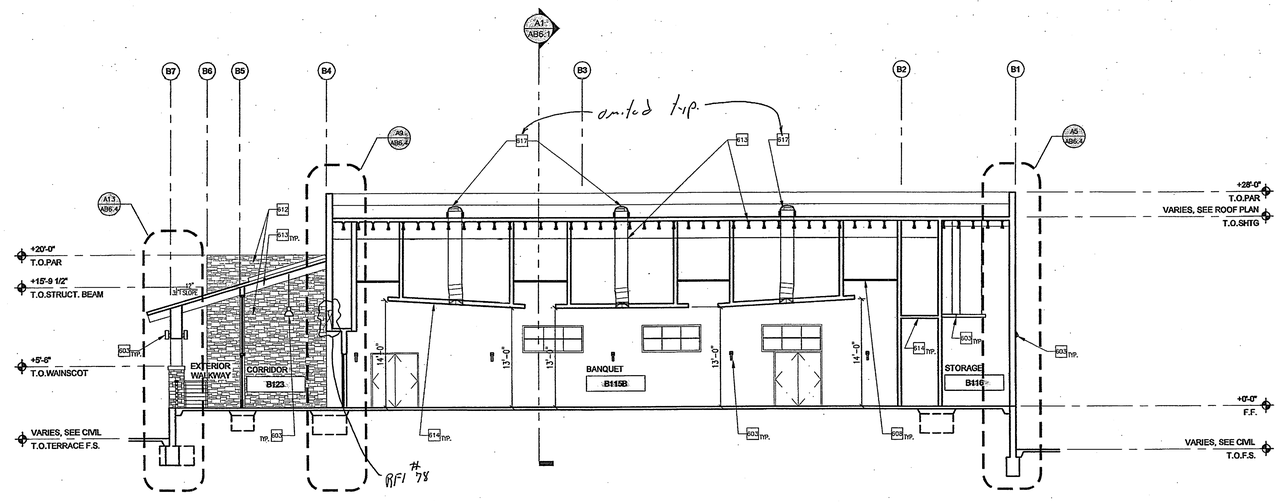

BUILDING 'B' SECTION | F1

1/8" = 1'-0"

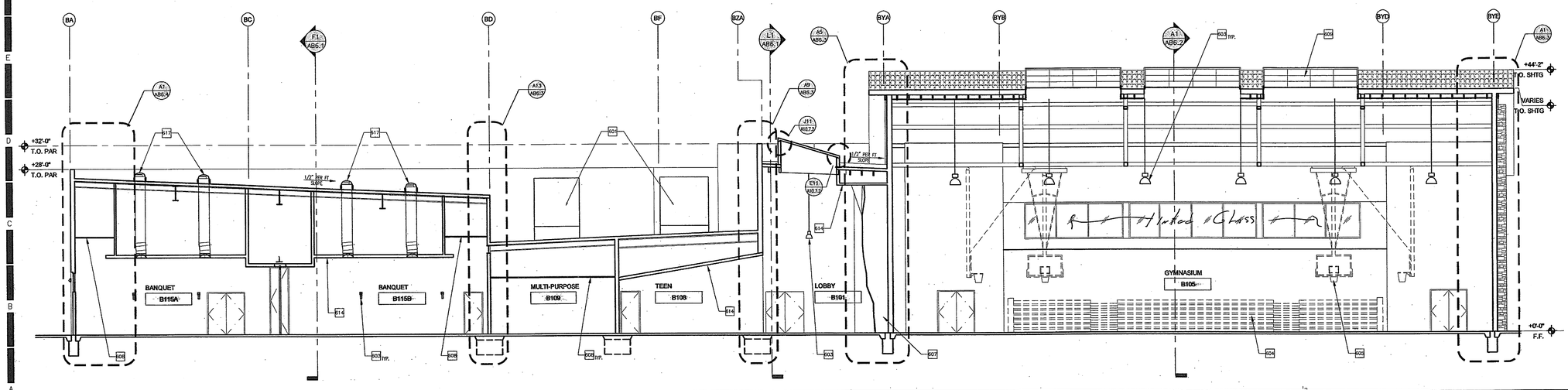

BUILDING 'B' SECTION | A1

1/8" = 1'-0"

HMC ARCHITECTS
Architecture Interiors Planning
3546 CONCOURS STREET
ONTARIO, CALIFORNIA 91764
Telephone: 909 . 989 . 9979
Fax: 909 . 483 . 1400
www. hmcarchitects .com

#	BUILDING SECTION KEY NOTES	DETAIL
801	MECHANICAL UNITS	SEE MECH.
802	MECHANICAL DUCTWORK - PAINTED	SEE MECH.
803	ELECTRICAL LIGHTING FIXTURES	SEE ELEC.
804	TELESCOPING BLEACHERS	SEE SPECS.
805	BASKETBALL BACKSTOP	SEE SPECS.
806	BASKETBALL SCORE CLOCK	SEE SPECS.
807	~~CLIMBING WALL~~ omited	AB7.3
808	SUSPENDED CEILING GRID	A10.9.2
809	ASI-THRU PHOTOVOLTAIC GLASS SKYLIGHT	SEE SPECS.
810	PROTECTIVE WALL PADDING	SEE SPECS.
811	NOT USED	
812	STONE VENEER	E4 / A10.5.2
813	ROOF FRAMING - PER STRUCTURAL DWGS.	SEE STRUCTURAL
814	GYP. BD SOFFIT OR CEILING	
815	EXPOSED STEEL COLUMN - PAINTED	SEE STRUCTURAL
816	WOOD TRELLIS - PER STRUCTURAL DWGS.	J1 & N8 / A10.7.4
817	TUBULAR SKYLIGHT	A14 / A10.7.2

BUILDING SECTION KEYNOTES

1. FOR TYPICAL SYMBOLS AND ABBREVIATIONS, REFER TO SHEET G1.2
2. WHERE WALL ELEVATION IS NOT SHOWN, MATCH ADJACENT FINISH, COLOR, JOINT LOCATIONS ETC.
3. REFER TO DOOR AND WINDOW SCHEDULES FOR LOCATIONS, DIMENSIONS AND CONFIGURATIONS OF WINDOWS AND DOORS.
4. PROVIDE HORIZONTAL LATH NAILING AT ALL EXTERIOR SOFFITS PER DETAIL J1/A10.8.

BUILDING SECTION LEGEND

AS BUILT

Key Plan

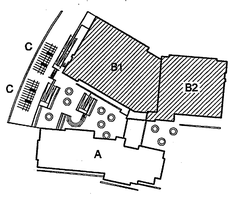

N.T.S.

Consultant's Seal

Agency Approval

Project Title

CITY OF RIVERSIDE

ORANGE TERRACE LIBRARY / COMMUNITY CENTER

PLAN CHECK NO. 07-1397

20010 ORANGE TERRACE PARKWAY
RIVERSIDE, CA 92508

SM HMC ARCHITECTS

No.	Revisions/Submissions	Date:
	Design Development Submittal	12/18/06
	Building Department Submittal	03/29/07
1	Building Department Resubmittal	05/22/07
2	Building Department Resubmittal / QA QC Review	06/22/07

Drawing Title

BUILDING 'B' SECTIONS

Architect's Seal

LICENSED ARCHITECT CHRISTOPHER A. JOYNER NO. C-15759 REN. 02-24-09 STATE OF CALIFORNIA

Designed: SS	Project No. 2340001
Drawn: XL/SS	Scale: AS NOTED
Checked: LP	Drawing No.
Reviewed: RS	AB6.1
Date: 06-22-07	Sheet 01 of ##

NOT USED | L1

NOT USED | F1

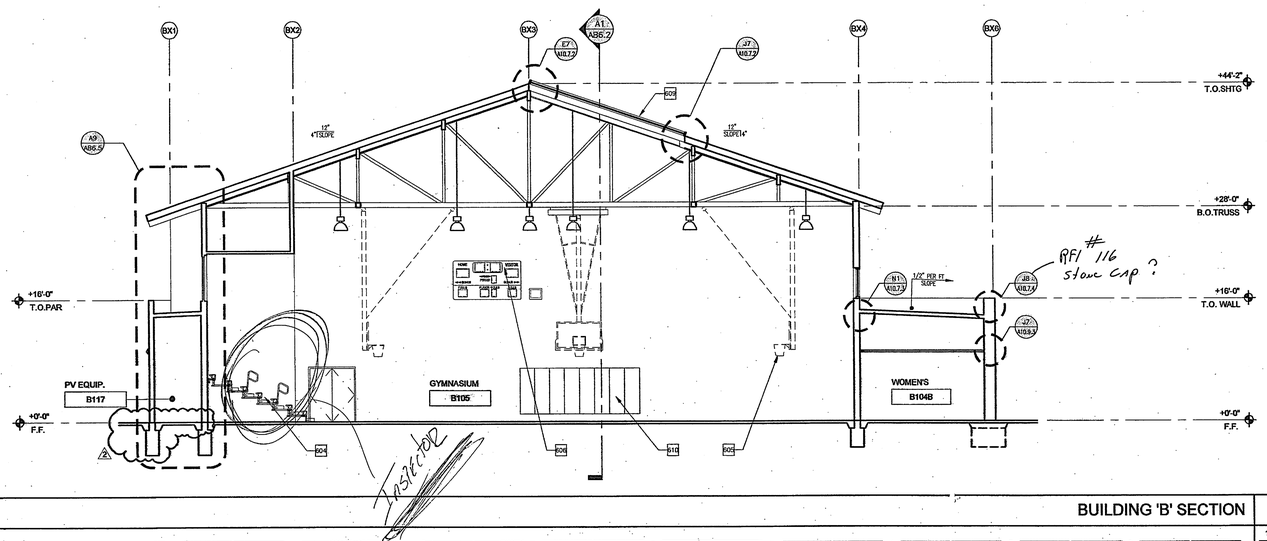

BUILDING 'B' SECTION | A1

1/8" = 1'-0"

HMC ARCHITECTS
Architecture Interiors Planning
3546 CONCOURS STREET
ONTARIO, CALIFORNIA 91764
Telephone: 909 . 989 . 9979
Fax: 909 . 483 . 1400
www. hmcarchitects .com

#	BUILDING SECTION KEY NOTES	DETAIL
001	MECHANICAL UNITS	SEE MECH.
002	MECHANICAL DUCTWORK - PAINTED	SEE MECH.
003	ELECTRICAL LIGHTING FIXTURES	SEE ELEC.
004	TELESCOPING BLEACHERS	SEE SPECS.
005	BASKETBALL BACKSTOP	SEE SPECS.
006	BASKETBALL SCORE CLOCK	SEE SPECS.
007	CLIMBING WALL	AB7.3
008	SUSPENDED CEILING GRID	A10.9.2
009	ASI-THRU PHOTOVOLTAIC GLASS SKYLIGHT	SEE SPECS.
010	PROTECTIVE WALL PADDING	SEE SPECS.
011	NOT USED	
012	STONE VENEER	E4 / A10.5.2
013	ROOF FRAMING - PER STRUCTURAL DWGS.	SEE STRUCTURAL
014	GYP. BD SOFFIT OR CEILING	
015	EXPOSED STEEL COLUMN - PAINTED	SEE STRUCTURAL
016	WOOD TRELLIS - PER STRUCTURAL DWGS.	J1 & N8 / A10.7.4
017	TUBULAR SKYLIGHT	A14 / A10.7.2

BUILDING SECTION KEYNOTES

1. FOR TYPICAL SYMBOLS AND ABBREVIATIONS, REFER TO SHEET G1.2
2. WHERE WALL ELEVATION IS NOT SHOWN, MATCH ADJACENT FINISH, COLOR, JOINT LOCATIONS ETC.
3. REFER TO DOOR AND WINDOW SCHEDULES FOR LOCATIONS, DIMENSIONS AND CONFIGURATIONS OF WINDOWS AND DOORS.
4. PROVIDE HORIZONTAL LATH NAILING AT ALL EXTERIOR SOFFITS PER DETAIL J1/A10.8.

BUILDING SECTION LEGEND

AS BUILT

Key Plan

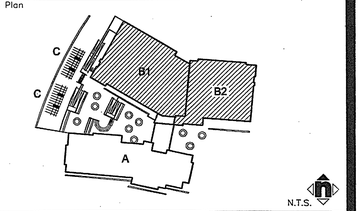

Consultant's Seal

Agency Approval

Project Title

CITY OF RIVERSIDE

ORANGE TERRACE LIBRARY / COMMUNITY CENTER
PLAN CHECK NO. 07-1397

20010 ORANGE TERRACE PARKWAY
RIVERSIDE, CA 92508

HMC ARCHITECTS

No.	Revisions/Submissions	Date:
	Design Development Submittal	12/18/06
	Building Department Submittal	03/29/07
1	Building Department Resubmittal	05/22/07
2	Building Department Resubmittal / QA QC Review	06/22/07

Drawing Title

BUILDING 'B' SECTIONS

Architect's Seal

LICENSED ARCHITECT
CHRISTOPHER RICHARD TAYLOR
NO. C-19759
REN. 02-24-09
STATE OF CALIFORNIA

Designed: SS	Project No. 2340001
Drawn: XL/SS	Scale: AS NOTED
Checked: LP	Drawing No.
Reviewed: RS	AB6.2
Date: 06-22-07	Sheet 01 of 11

File Name: N:\2005 Jobs\2340 City of Riverside - Diffenbaugh\001-000\18-CAD\Sheets\AB6.2 BUILDING B SECTIONS.dwg Jun 21,2007-1:03pm

PLEASE RECYCLE AB6.2 BUILDING B SECTIONS.DWG

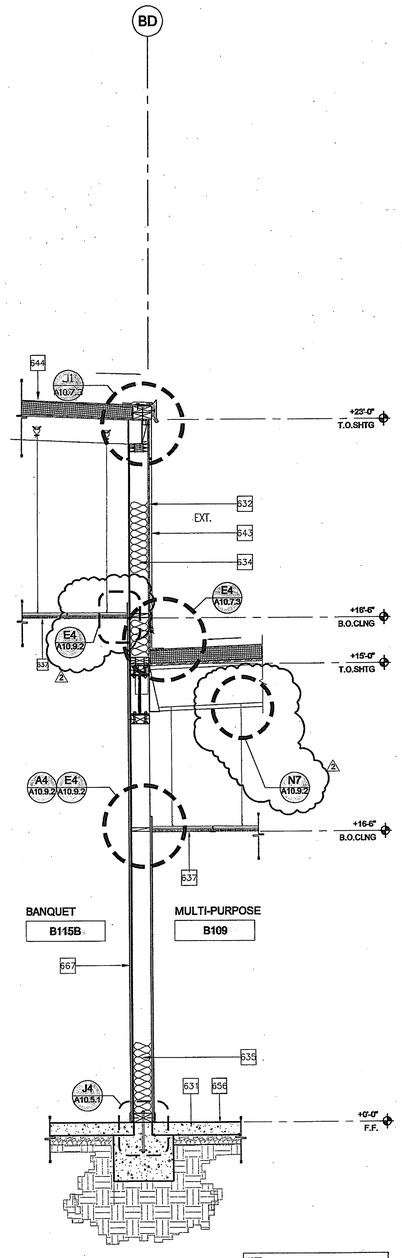

NOTE: FOR ADDITIONAL INFORMATION REFER TO DETAIL 24/SB4.2

BUILDING 'B' WALL SECTION | A13 | 1/2" = 1'-0"

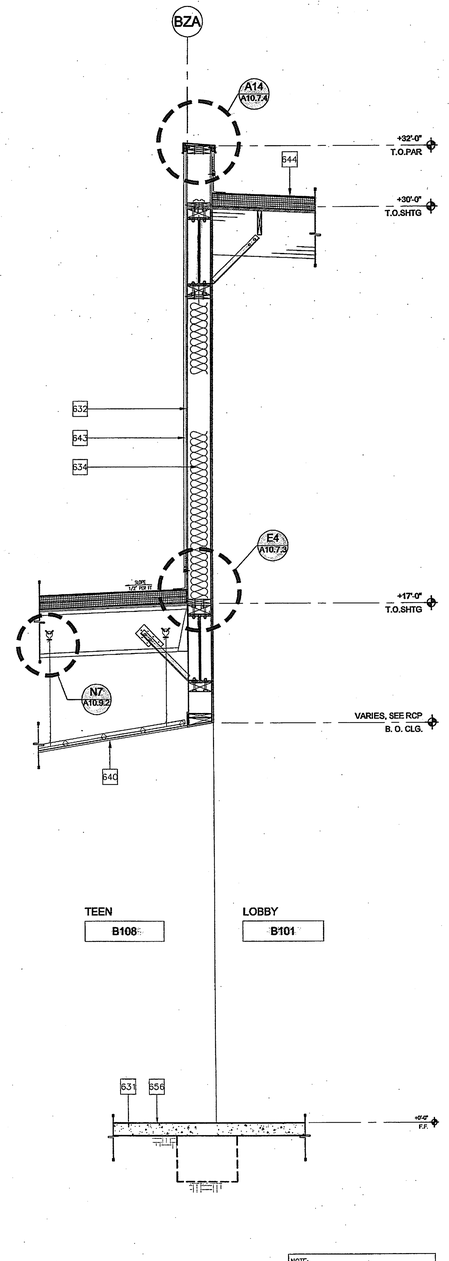

NOTE: FOR ADDITIONAL INFORMATION REFER TO DETAIL 6/SB4.1

BUILDING 'B' WALL SECTION | A9 | 1/2" = 1'-0"

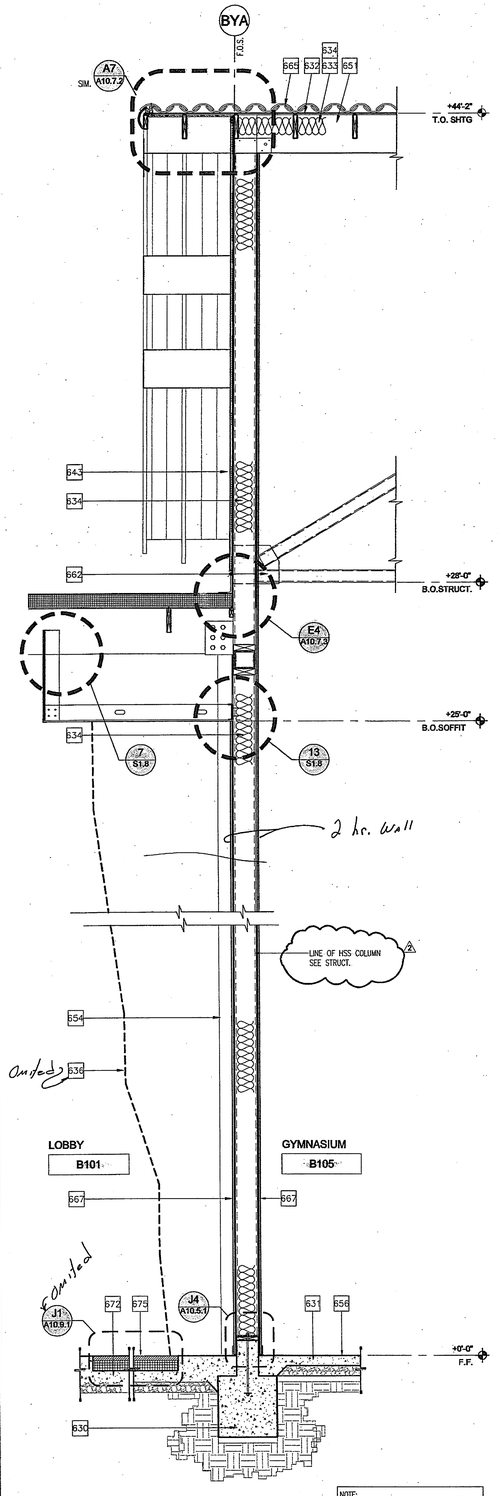

NOTE: FOR ADDITIONAL INFORMATION REFER TO DETAIL 23/SB4.1

BUILDING 'B' WALL SECTION | A5 | 1/2" = 1'-0"

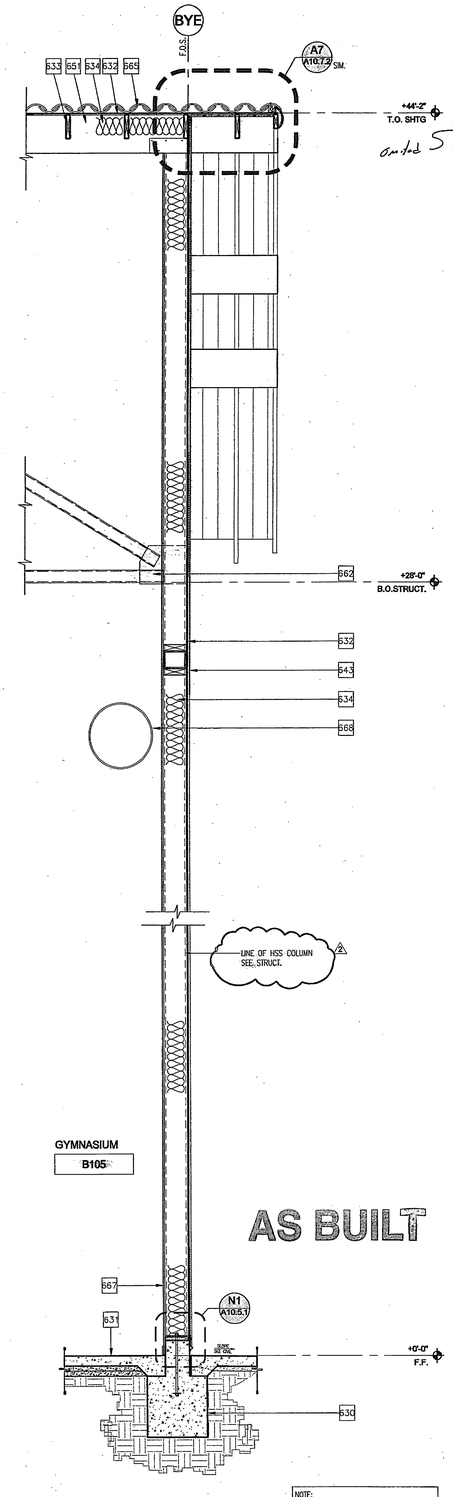

NOTE: FOR ADDITIONAL INFORMATION REFER TO DETAIL 25/SB4.1

BUILDING 'B' WALL SECTION | A1 | 1/2" = 1'-0"

HMC ARCHITECTS
Architecture Interiors Planning
3546 CONCOURS STREET
ONTARIO, CALIFORNIA 91764
Telephone: 909 . 989 . 9979
Fax: 909 . 483 . 1400
www. hmcarchitects .com

#	BUILDING WALL SECTION KEY NOTES	DETAIL
630	CONCRETE FOOTING	SEE STRUCT.
631	CONCRETE SLAB	SEE STRUCT.
632	PLYWOOD SHEATHING	SEE STRUCT.
633	ROOF FRAMING	SEE STRUCT.
634	THERMAL INSULATION	SEE SPECS.
635	ACOUSTICAL INSULATION	SEE SPECS.
636	CLIMBING WALL - ATTACHED TO STRUCTURAL STEEL COLUMNS PER CLIMBING WALL MANUFACTURER'S REQUIREMENTS	AB.7.3
637	SUSPENDED CEILING GRID	A10.9.2
638	CEILING JOIST FRAMING	SEE STRUCT.
639	CERAMIC TILE	SEE SPECS.
640	GYPSUM BOARD CEILING - PAINTED	A10.9.3
641	6" EXT. WALL EXPANSION / SEISMIC JOINT	A7/A10.5.3
642	6" EXT. WALL / ROOF EXPANSION / SEISMIC JOINT	E7/A10.5.3
643	EXTERIOR PLASTER, PAINTED	SEE SPEC.
644	TPO ROOF MEMBRANE	A10.7.3
645	ALUMINUM STOREFRONT SYSTEM	SEE WINDOW SCHEDULE
646	ALUMINUM WINDOW	SEE WINDOW SCHEDULE
647	GLAZED ALUMINUM CURTAIN WALL	SEE WINDOW SCHEDULE
648	DOWNSPOUT W/ CONCRETE SPLASH BOX	E1&E14 / A10.7.4
649	GUTTER	E4 / A10.7.2
650	LIGHT FIXTURE	SEE ELECT.
651	GLULAM BEAM	SEE STRUCT.
652	EXTERIOR PLASTER SOFFIT, PAINTED	A10.9.4
653	FOLDING PANEL PARTITIONS	SEE SPECS.
654	STEEL COLUMN	SEE STRUCT.
655	SUSPENDED GYP. BD. CEILING - PAINTED	A10.9.3
656	FLOORING	SEE FIN. SCHEDULE
657	BLEACHER BACKING LOCATED PER MANUFACTURER'S REQUIREMENTS	SEE SPECS.
658	DUCTWORK PENETRATION THRU WALL	J4 / A10.5.2
659	OVERHEAD COILING DOOR	A10.8.1
660	CONCRETE TOPPING	SEE STRUCT.
661	EXTERIOR WOOD TRELLIS - STAINED	SEE STRUCT.
662	STRUCTURAL FRAMING	SEE STRUCT.
663	PARAPET BRACE	SEE STRUCT.
664	STONE VENEER	E4 / A10.5.2
665	CLAY TILE ROOFING	A10.7.2
666	6" EXT. WALL / CEILING EXPANSION / SEISMIC JOINT	E7 / A10.5.3
667	GYPSUM BOARD - PAINTED	
668	MECHANICAL DUCTWORK	SEE MECH.
669	MECH. WALL LOUVER	SEE MECH.
670	TUBULAR SKYLIGHT	A14 / A10.7.2
671	MECHANICAL PIPES	SEE MECH.
672	DEPRESSED CONC. SLAB	SEE STRUCT. SEE FIN. SCHED
673	METAL STUD FRAMING	SEE STRUCT.
674	EXPOSED WOOD FRAMING, PAINTED	
675	CLIMBING WALL PADDED FLOORING SYSTEM	J1 / AB 9.1
676	PERFORATED CEILING VENT	E11/A10.9.4
677	CONCRETE SPLASH BOX	E14/A10.7.4
678	SLOPED SKYLIGHT	A10.7.2

GENERAL NOTES

1) SEE STRUCTURAL SHEETS S1.3 FOR TYPICAL WOOD STUD FRAMING CONNECTIONS AND S1.8 FOR TYPICAL METAL STUD FRAMING CONNECTIONS

Key Plan

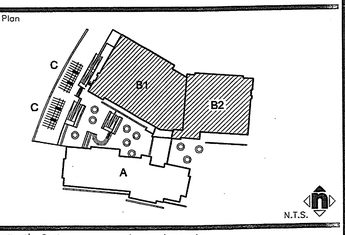

Consultant's Seal

Agency Approval

Project Title

CITY OF RIVERSIDE

ORANGE TERRACE LIBRARY / COMMUNITY CENTER

PLAN CHECK NO. 07-1397

20010 ORANGE TERRACE PARKWAY
RIVERSIDE, CA 92508

HMC ARCHITECTS

No.	Revisions/Submissions	Date:
	Design Development Submittal	12/18/06
	Building Department Submittal	03/29/07
1	Building Department Resubmittal	05/22/07
2	Building Department Resubmittal / QA QC Review	06/22/07

Drawing Title

BUILDING "B" WALL SECTIONS

Architect's Seal

LICENSED ARCHITECT CHRISTOPHER MICHAEL TAYLOR NO. C-19759 REN. 02-24-09 STATE OF CALIFORNIA

Designed: SS	Project No. 2340001
Drawn: MM	Scale: AS NOTED
Checked: LP	Drawing No.
Reviewed: RS	AB6.3
Date: 06-22-07	Sheet 01 of ##

File Name: N:\2005 Jobs\2340 City of Riverside - Diffenbaugh\001-000\18-CAD\Sheets\AB6.3 BUILDING B WALL SECTIONS.dwg Jun 21,2007-1:03pm

PLEASE RECYCLE AB6.3 BUILDING B WALL SECTIONS.DWG

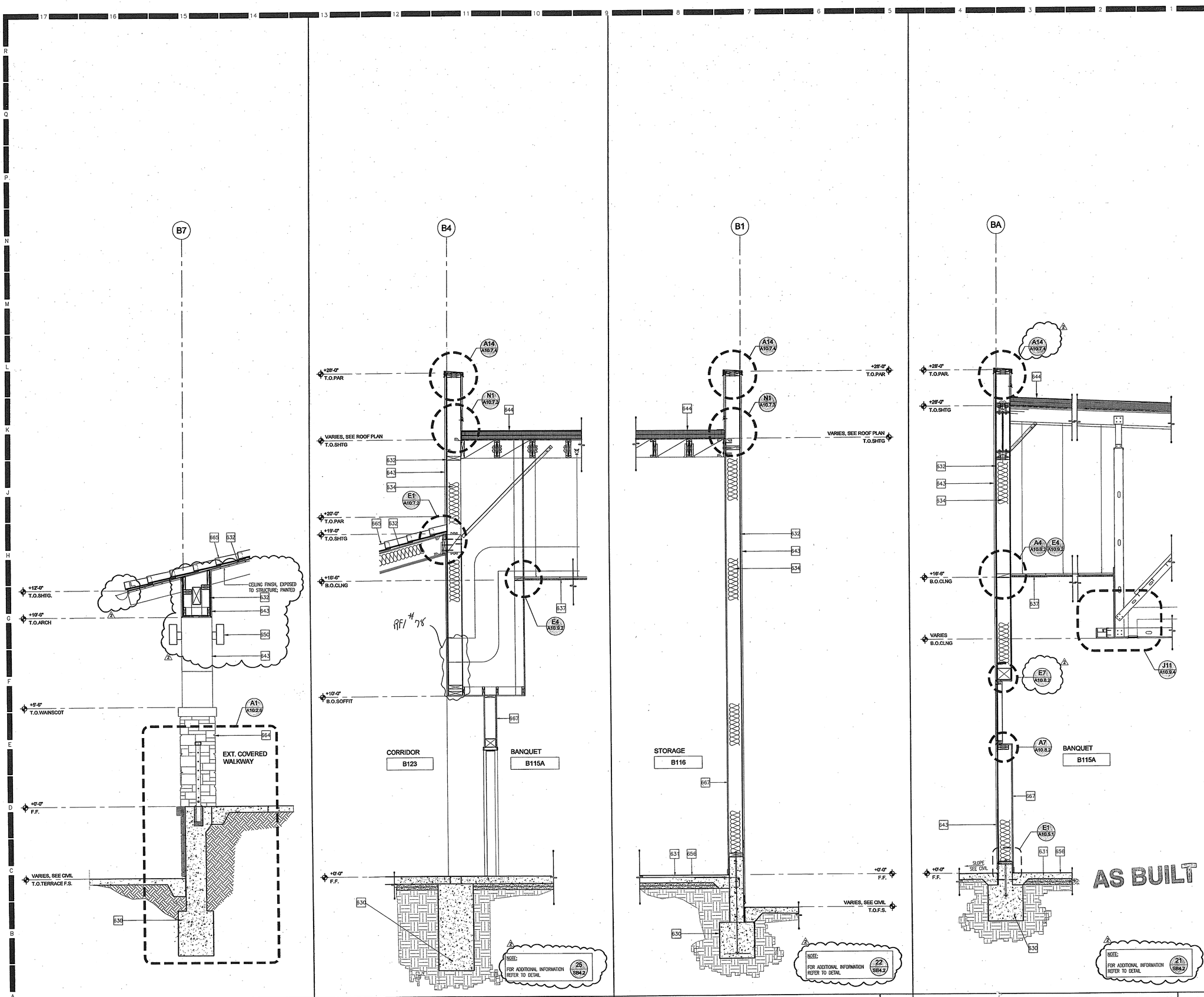

BUILDING 'B' WALL SECTION	A13	1/2" = 1'-0"
BUILDING 'B' WALL SECTION	A9	1/2" = 1'-0"
BUILDING 'B' WALL SECTION	A5	1/2" = 1'-0"
BUILDING 'B' WALL SECTION	A1	1/2" = 1'-0"

HMC ARCHITECTS
Architecture Interiors Planning
3546 CONCOURS STREET
ONTARIO, CALIFORNIA 91764
Telephone: 909 . 989 . 9979
Fax: 909 . 483 . 1400
www. hmcarchitects .com

#	BUILDING WALL SECTION KEY NOTES	DETAIL
630	CONCRETE FOOTING	SEE STRUCT.
631	CONCRETE SLAB	SEE STRUCT.
632	PLYWOOD SHEATHING	SEE STRUCT.
633	ROOF FRAMING	SEE STRUCT.
634	THERMAL INSULATION	SEE SPECS.
635	ACOUSTICAL INSULATION	SEE SPECS.
636	CLIMBING WALL - ATTACHED TO STRUCTURAL STEEL COLUMNS PER CLIMBING WALL MANUFACTURER'S REQUIREMENTS	AB.7.3
637	SUSPENDED CEILING GRID	A10.9.2
638	CEILING JOIST FRAMING	SEE STRUCT.
639	CERAMIC TILE	SEE SPECS.
640	GYPSUM BOARD CEILING - PAINTED	A10.9.3
641	6" EXT. WALL EXPANSION / SEISMIC JOINT	A7/A10.5.3
642	6" EXT. WALL / ROOF EXPANSION / SEISMIC JOINT	E7/A10.5.3
643	EXTERIOR PLASTER, PAINTED	SEE SPEC.
644	TPO ROOF MEMBRANE	A10.7.3
645	ALUMINUM STOREFRONT SYSTEM	SEE WINDOW SCHEDULE
646	ALUMINUM WINDOW	SEE WINDOW SCHEDULE
647	GLAZED ALUMINUM CURTAIN WALL	SEE WINDOW SCHEDULE
648	DOWNSPOUT W/ CONCRETE SPLASH BOX	E1&E14 / A10.7.4
649	GUTTER	E4 / A10.7.2
650	LIGHT FIXTURE	SEE ELECT.
651	GLULAM BEAM	SEE STRUCT.
652	EXTERIOR PLASTER SOFFIT, PAINTED	A10.9.4
653	FOLDING PANEL PARTITIONS	SEE SPECS.
654	STEEL COLUMN	SEE STRUCT.
655	SUSPENDED GYP. BD. CEILING - PAINTED	A10.9.3
656	FLOORING	SEE FIN. SCHEDULE
657	BLEACHER BACKING LOCATED PER MANUFACTURER'S REQUIREMENTS	SEE SPECS.
658	DUCTWORK PENETRATION THRU WALL	J4 / A10.5.2
659	OVERHEAD COILING DOOR	A10.8.1
660	CONCRETE TOPPING	SEE STRUCT.
661	EXTERIOR WOOD TRELLIS - STAINED	SEE STRUCT.
662	STRUCTURAL FRAMING	SEE STRUCT.
663	PARAPET BRACE	SEE STRUCT.
664	STONE VENEER	E4 / A10.5.2
665	CLAY TILE ROOFING	A10.7.2
666	6" EXT. WALL / CEILING EXPANSION / SEISMIC JOINT	E7 / A10.5.3
667	GYPSUM BOARD - PAINTED	
668	MECHANICAL DUCTWORK	SEE MECH.
669	MECH. WALL LOUVER	SEE MECH.
670	TUBULAR SKYLIGHT	A14 / A10.7.2
671	MECHANICAL PIPES	SEE MECH.
672	DEPRESSED CONC. SLAB	SEE STRUCT.
673	METAL STUD FRAMING	SEE STRUCT. SEE FIN. SCHED
674	EXPOSED WOOD FRAMING, PAINTED	SEE STRUCT.
675	CLIMBING WALL PADDED FLOORING SYSTEM	J1 / AB 9.1
676	PERFORATED CEILING VENT	E11/A10.9.4
677	CONCRETE SPLASH BOX	E14/A10.7.4
678	SLOPED SKYLIGHT	A10.7.2

GENERAL NOTES

1) SEE STRUCTURAL SHEETS S1.3 FOR TYPICAL WOOD STUD FRAMING CONNECTIONS AND S1.8 FOR TYPICAL METAL STUD FRAMING CONNECTIONS

Key Plan

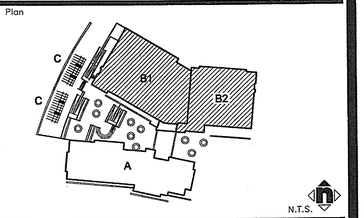

Consultant's Seal

Agency Approval

Project Title

CITY OF RIVERSIDE

ORANGE TERRACE LIBRARY / COMMUNITY CENTER

PLAN CHECK NO. 07-1397

20010 ORANGE TERRACE PARKWAY
RIVERSIDE, CA 92508

SM HMC ARCHITECTS

No.	Revisions/Submissions	Date:
	Design Development Submittal	12/18/06
	Building Department Submittal	03/29/07
1	Building Department Resubmittal	05/22/07
2	Building Department Resubmittal / QA QC Review	06/22/07

Drawing Title

BUILDING "B" WALL SECTIONS

Architect's Seal

LICENSED ARCHITECT CHRISTOPHER PAUL PAYNE NO. C-19759 REN. 02-24-09 STATE OF CALIFORNIA

Designed:	SS	Project No.	2340001
Drawn:	MM	Scale:	AS NOTED
Checked:	LP	Drawing No.	AB6.4
Reviewed:	RS		
Date:	06-22-07	Sheet	01 of ##

PLEASE RECYCLE

AB6.4 BUILDING B WALL SECTIONS.DWG

File Name: N:\2005 Jobs\2340 City of Riverside – Diffenbaugh\001-000\18-CAD\Sheets\AB6.4 BUILDING B WALL SECTIONS.dwg Jun 21,2007-1:02pm

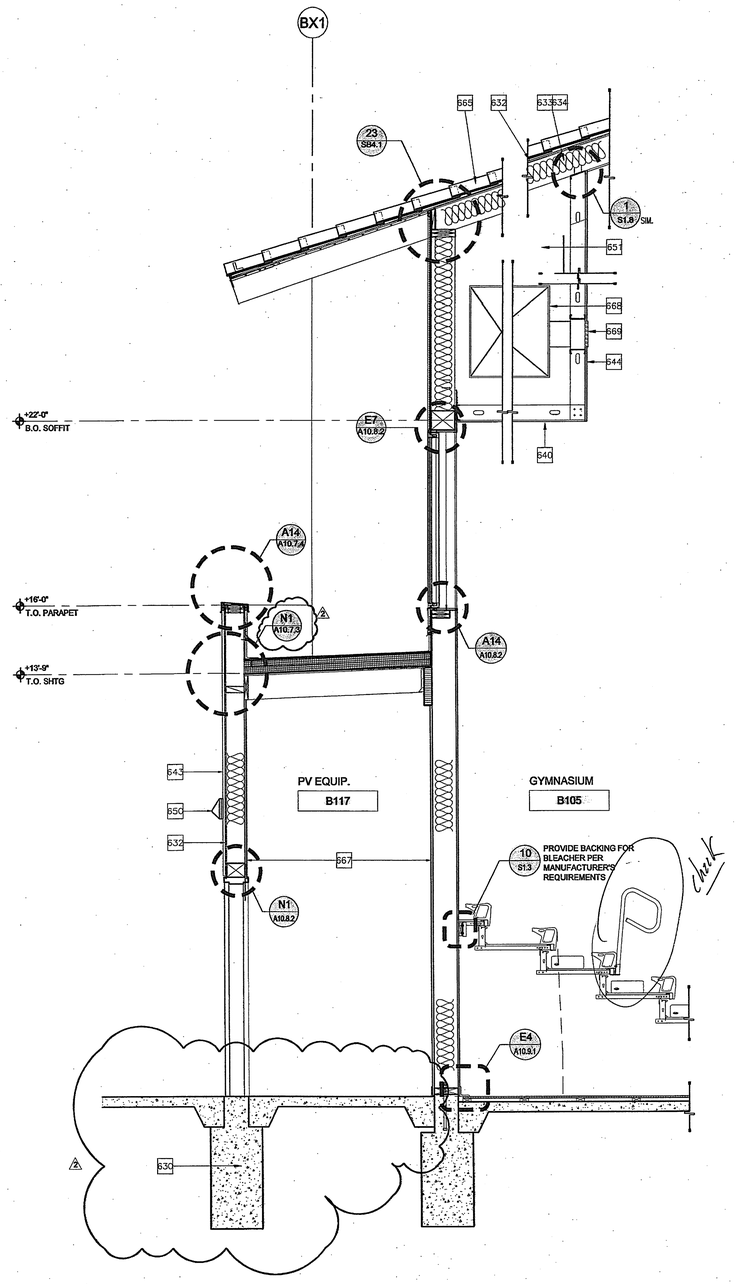

BUILDING 'B' WALL SECTION | A9 | 1/2" = 1'-0"

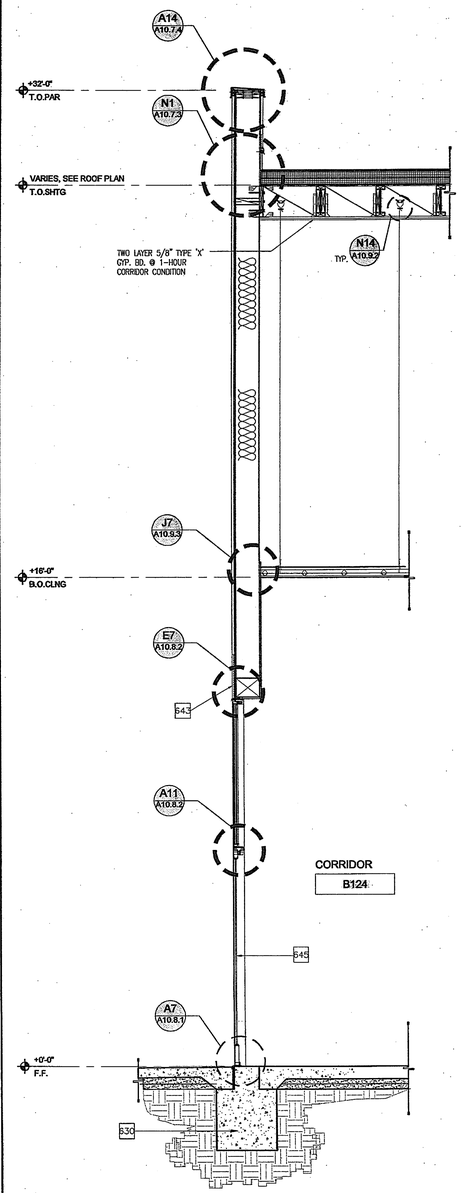

BUILDING 'B' WALL SECTION | A5 | 1/2" = 1'-0"

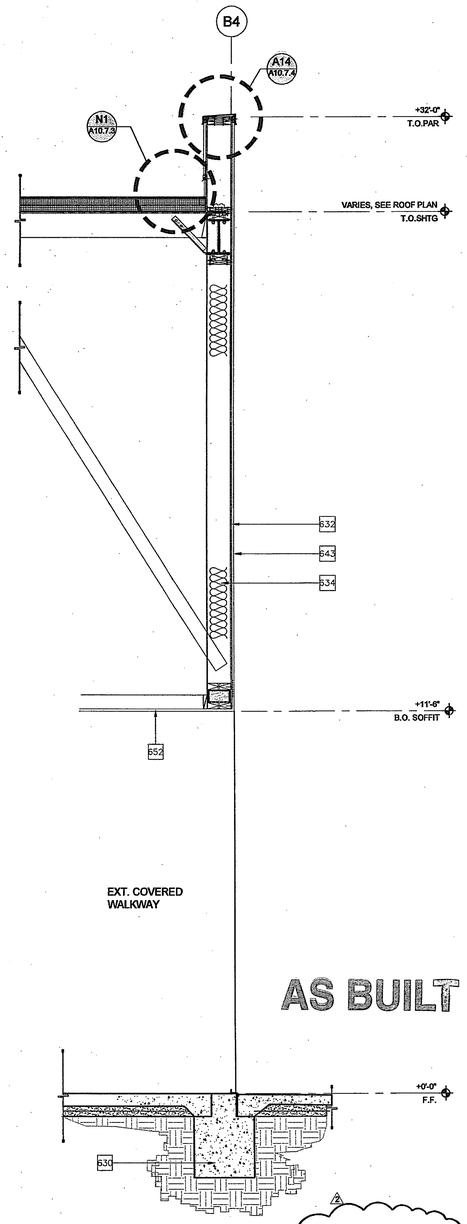

BUILDING 'B' WALL SECTION | A1 | 1/2" = 1'-0"

NOTE:
FOR ADDITIONAL INFORMATION REFER TO DETAIL 9 / S8.4.3

HMC ARCHITECTS
Architecture Interiors Planning
3546 CONCOURS STREET
ONTARIO, CALIFORNIA 91764
Telephone: 909 . 989 . 9979
Fax: 909 . 483 . 1400
www. hmcarchitects .com

#	BUILDING WALL SECTION KEY NOTES	DETAIL
630	CONCRETE FOOTING	SEE STRUCT.
631	CONCRETE SLAB	SEE STRUCT.
632	PLYWOOD SHEATHING	SEE STRUCT.
633	ROOF FRAMING	SEE STRUCT.
634	THERMAL INSULATION	SEE SPECS.
635	ACOUSTICAL INSULATION	SEE SPECS.
636	CLIMBING WALL - ATTACHED TO STRUCTURAL STEEL COLUMNS PER CLIMBING WALL MANUFACTURER'S REQUIREMENTS	AB.7.3
637	SUSPENDED CEILING GRID	A10.9.2
638	CEILING JOIST FRAMING	SEE STRUCT.
639	CERAMIC TILE	SEE SPECS.
640	GYPSUM BOARD CEILING - PAINTED	A10.9.3
641	6" EXT. WALL EXPANSION / SEISMIC JOINT	A7/A10.5.3
642	6" EXT. WALL / ROOF EXPANSION / SEISMIC JOINT	E7/A10.5.3
643	EXTERIOR PLASTER, PAINTED	SEE SPEC.
644	TPO ROOF MEMBRANE	A10.7.3
645	ALUMINUM STOREFRONT SYSTEM	SEE WINDOW SCHEDULE
646	ALUMINUM WINDOW	SEE WINDOW SCHEDULE
647	GLAZED ALUMINUM CURTAIN WALL	SEE WINDOW SCHEDULE
648	DOWNSPOUT W/ CONCRETE SPLASH BOX	E18/E14 / A10.7.4
649	GUTTER	E4 / A10.7.2
650	LIGHT FIXTURE	SEE ELECT.
651	GLULAM BEAM	SEE STRUCT.
652	EXTERIOR PLASTER SOFFIT, PAINTED	A10.9.4
653	FOLDING PANEL PARTITIONS	SEE SPECS.
654	STEEL COLUMN	SEE STRUCT.
655	SUSPENDED GYP. BD. CEILING - PAINTED	A10.9.3
656	FLOORING	SEE FIN. SCHEDULE
657	BLEACHER BACKING LOCATED PER MANUFACTURER'S REQUIREMENTS	SEE SPECS.
658	DUCTWORK PENETRATION THRU WALL	J4 / A10.5.2
659	OVERHEAD COILING DOOR	A10.8.1
660	CONCRETE TOPPING	SEE STRUCT.
661	EXTERIOR WOOD TRELLIS - STAINED	SEE STRUCT.
662	STRUCTURAL FRAMING	SEE STRUCT.
663	PARAPET BRACE	SEE STRUCT.
664	STONE VENEER	E4 / A10.5.2
665	CLAY TILE ROOFING	A10.7.2
666	6" EXT. WALL / CEILING EXPANSION / SEISMIC JOINT	E7 / A10.5.3
667	GYPSUM BOARD - PAINTED	
668	MECHANICAL DUCTWORK	SEE MECH.
669	MECH. WALL LOUVER	SEE MECH.
670	TUBULAR SKYLIGHT	A14 / A10.7.2
671	MECHANICAL PIPES	SEE MECH.
672	DEPRESSED CONC. SLAB	SEE STRUCT. SEE FIN. SCHED
673	METAL STUD FRAMING	SEE STRUCT.
674	EXPOSED WOOD FRAMING, PAINTED	
675	CLIMBING WALL PADDED FLOORING SYSTEM	J1 / AB 9.1
676	PERFORATED CEILING VENT	E11/A10.9.4
677	CONCRETE SPLASH BOX	E14/A10.7.4
678	SLOPED SKYLIGHT	A10.7.2

GENERAL NOTES

1) SEE STRUCTURAL SHEETS S1.3 FOR TYPICAL WOOD STUD FRAMING CONNECTIONS AND S1.8 FOR TYPICAL METAL STUD FRAMING CONNECTIONS

Key Plan

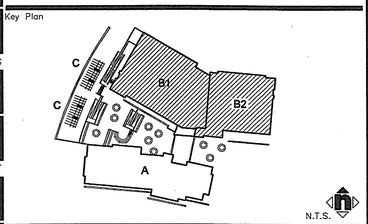

Consultant's Seal

Agency Approval

Project Title

ORANGE TERRACE LIBRARY / COMMUNITY CENTER
PLAN CHECK NO. 07-1397

20010 ORANGE TERRACE PARKWAY
RIVERSIDE, CA 92508

CITY OF RIVERSIDE

SM HMC ARCHITECTS

No.	Revisions/Submissions	Date:
	Design Development Submittal	12/18/06
	Building Department Submittal	03/29/07
1	Building Department Resubmittal	05/22/07
2	Building Department Resubmittal / QA QC Review	06/22/07

Drawing Title

BUILDING "B" WALL SECTIONS

Architect's Seal

LICENSED ARCHITECT CHRISTOPHER RICHARD LAY LOPEZ REG. NO. C-19759 EXP. 02-28-09 STATE OF CALIFORNIA

Designed: SS	Project No. 2340001
Drawn: MM	Scale: AS NOTED
Checked: LP	Drawing No.
Reviewed: RS	AB6.5
Date: 06-22-07	Sheet 01 of ##

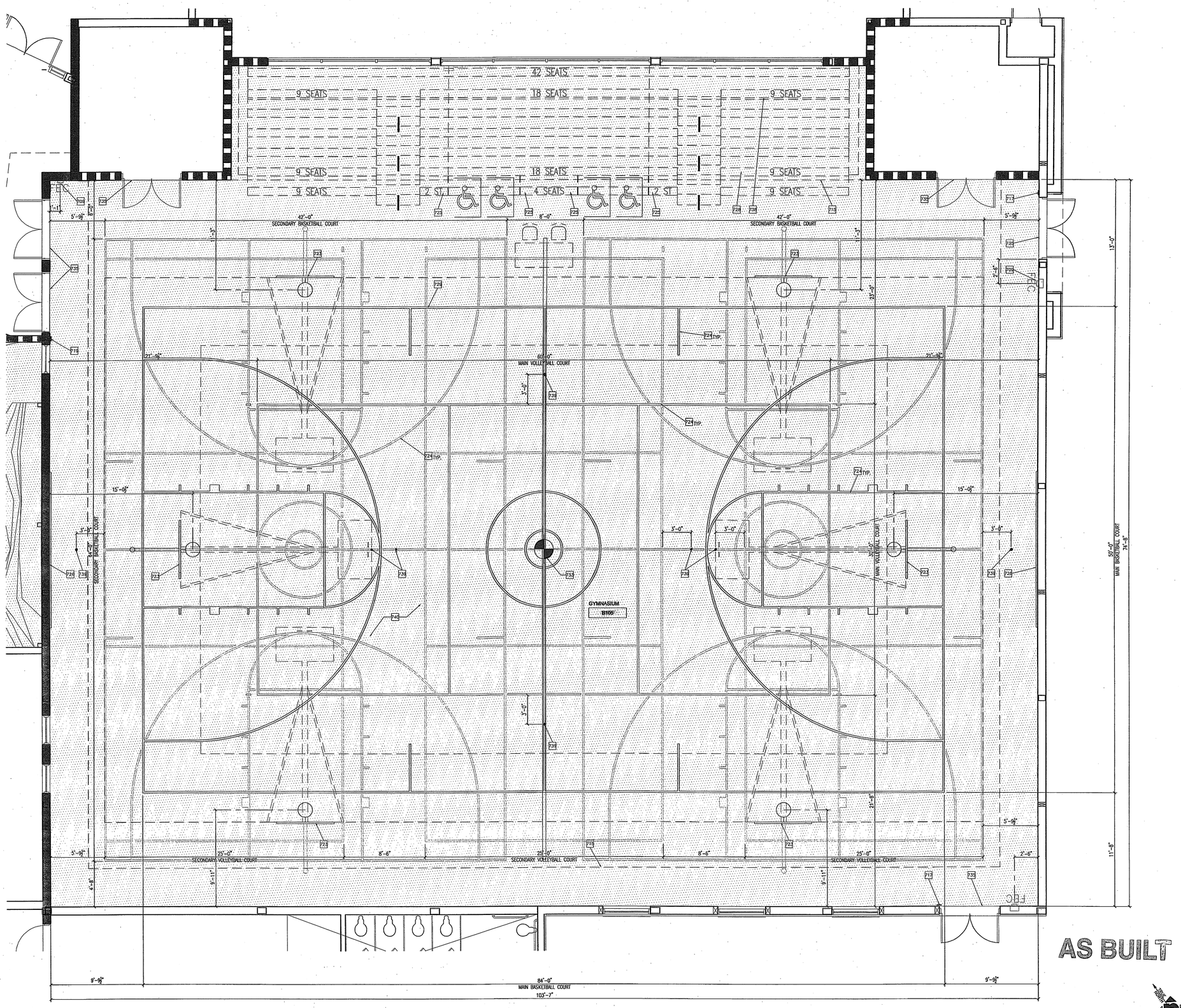

HMC ARCHITECTS

Architecture Interiors Planning

3546 CONCOURS STREET
ONTARIO, CALIFORNIA 91764
Telephone: 909 . 989 . 9979
Fax: 909 . 483 . 1400
www. hmcarchitects .com

#	ENLARGED FLOOR PLAN KEY NOTES	DETAIL
P01	STRUCTURAL BRACING - PAINTED	SEE STRUCT
P02	STORAGE CABINETS	
P03	COUNTERTOP	
P04	BOOK THEFT DETECTION SYSTEM	A7 / A10.9.1
P05	PROJ. UNIT SYSTEM RECESSED CLG. MTD.	E7 / A10.9.4
P06	ASSISTIVE LISTENING SIGN	E11 / A10.4.1
P07	SINK	SEE PLUMBING
P08	DRINKING FOUNTAIN	J7 / A10.13
P09	FIRE EXTINGUISHER AND CABINET	E11 / A10.5.2
P10	TACKABLE SURFACE	
P11	FIRE SIGNAGE OCCUPANT LOAD ROOM CAPACITY SIGN	A11 / A10.4.1
P12	FURRED WALL	DETAIL
P13	UPPER CASEWORK	A10.12
P14	LOWER CASEWORK	A10.12
P15	LINE OF SOFFIT ABOVE	
P16	BASE CABINET W/ SINK	A1 / A10.12
P17	EXIT SIGN	E7 / A10.4.1
P18	STRUCTURAL STEEL	SEE STRUCT.
P19	EXIT ROUTE SIGN	A7 / A10.4.1
P20	FOLDING PARTITION	SEE SPECS.
P21	SCOREBOARD	SEE SPECS.
P22	SHOT CLOCK	SEE SPECS.
P23	BASKETBALL BACKBOARD: RETRACTABLE	SEE SPECS.
P24	GAME STRIPING	A10.4.3
P25	BLEACHER COMPANION SEATING	
P26	PROTECTIVE WALL PADDING	AB8.1 & AB8.2
P27	HIGH IMPACT RESISTANT GYP. BD. SURFACE	
P28	TELESCOPING BLEACHERS	SEE SPECS.
P29	MAIN BASKETBALL COURT	A1 / A10.4.3
P30	SECONDARY BASKETBALL COURT	J1 / A10.4.3
P31	MAIN VOLLEYBALL COURT	A7 / A10.4.3
P32	SECONDARY VOLLEYBALL COURT	J7 / A10.4.3
P33	GYM STRIPING CONTROL POINT SEE A10-4.3 FOR STRIPING LAYOUT	
P34	VOLLEYBALL FLOOR SLEEVES	N7 / A10.9.1
P35	LINE OF WOOD FLOOR EXTENT	
P36	ELECTRICAL FLOOR POCKET	SEE ELECT.
P37	CONCEALED ROOF & OVERFLOW DRAIN	A4 / A10.6
P38	LINE OF BLEACHERS IN THE CLOSED POSITION	
P39	POST SLEEVE, SEE AB7.1 & STRIPING DETAILS FOR LOCATION	N7 / A10.9.1
P40	GYMNASIUM WOOD FLOORING	E4 / A10.9.1
P41	CLIMBING WALL - ATTACHED TO STRUCTURAL STEEL COLUMNS PER CLIMBING WALL MANUFACTURER'S REQUIREMENTS	SEE SPEC.
P42	INTERIOR WINDOW	SEE WINDOW SCHED.
P43	PAPER TOWEL DISPENSER	SEE SPEC.
P44	SOAP DISPENSER	SEE SPEC.
P45	CLIMBING WALL PADDED FLOORING SYSTEM	J1 / AB 9.1

FLOOR PLAN LEGEND

- NON RATED WALL
- 1 HOUR RATED WALL
- 2 HOUR RATED WALL
- NON RATED, NON BEARING METAL STUD WALL SEE DETAIL E14/A10.5
- FEC — FIRE EXTINGUISHER & CABINET
- DEPRESSED CONC. SLAB PER STRUCTURAL

Key Plan

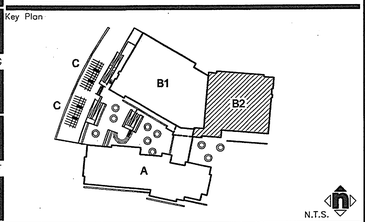

Consultant's Seal

Agency Approval

Project Title

CITY OF RIVERSIDE

ORANGE TERRACE LIBRARY / COMMUNITY CENTER

PLAN CHECK NO. 07-1397

20010 ORANGE TERRACE PARKWAY
RIVERSIDE, CA 92508

SM HMC ARCHITECTS

No.	Revisions/Submissions	Date:
	Design Development Submittal	12/18/06
	Building Department Submittal	03/29/07
1	Building Department Resubmittal	05/22/07
2	Building Department Resubmittal / QA QC Review	06/22/07

Drawing Title

BUILDING "B" ENLARGED FLOOR PLANS

Architect's Seal

LICENSED ARCHITECT
CHRISTOPHER JOHN TAYLOR
REG. NO. C-19759
REN. 02-24-09
STATE OF CALIFORNIA

Designed: SS	Project No. 2340001
Drawn: XL	Scale: AS NOTED
Checked: LP	Drawing No.
Reviewed: RS	AB7.1
Date: 06-22-07	Sheet 01 of ##

BUILDING 'B' ENLARGED FLOOR PLAN - GYMNASIUM B105 | A1 | 1/4" = 1'-0"

File Name: N:\2005 Jobs\2340 City of Riverside - Diffenbaugh\001-000\18-CAD\Sheets\AB7.1 BUILDING B ENLARGED FLOOR PLANS.dwg Jun 21,2007-1:02pm

PLEASE RECYCLE AB7.1 BUILDING B ENLARGED FLOOR PLANS.DWG

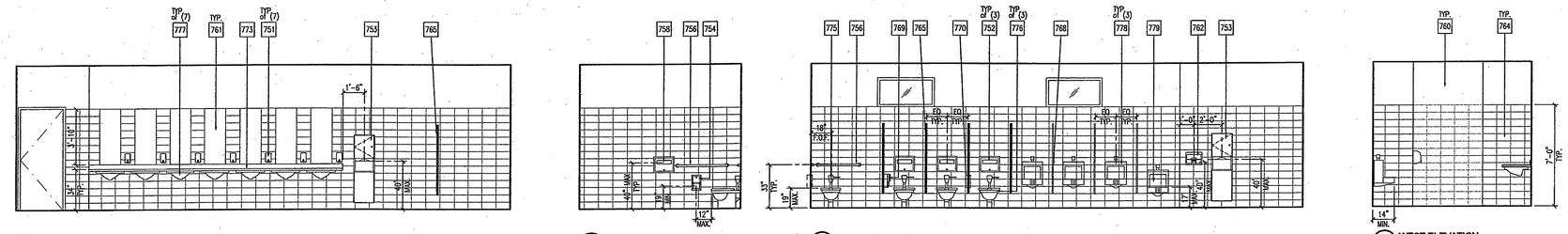

BUILDING 'B' INTERIOR ELEVATIONS - MEN'S B104A — J1

1/4" = 1'-0"

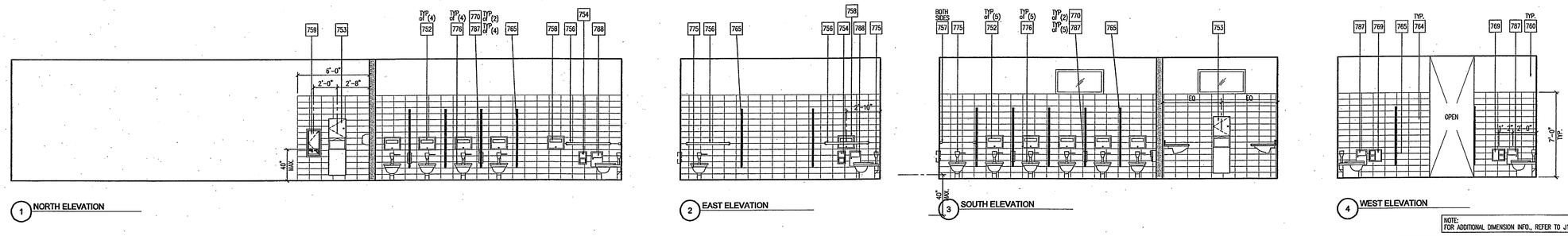

NOTE:
FOR ADDITIONAL DIMENSION INFO., REFER TO J1/–

BUILDING 'B' INTERIOR ELEVATIONS - WOMEN'S B104B — K1

1/4" = 1'-0"

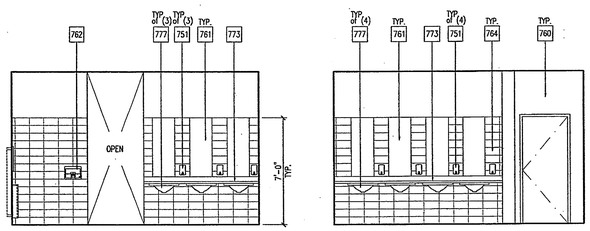

NOTE:
FOR ADDITIONAL DIMENSION INFO., REFER TO J1/–

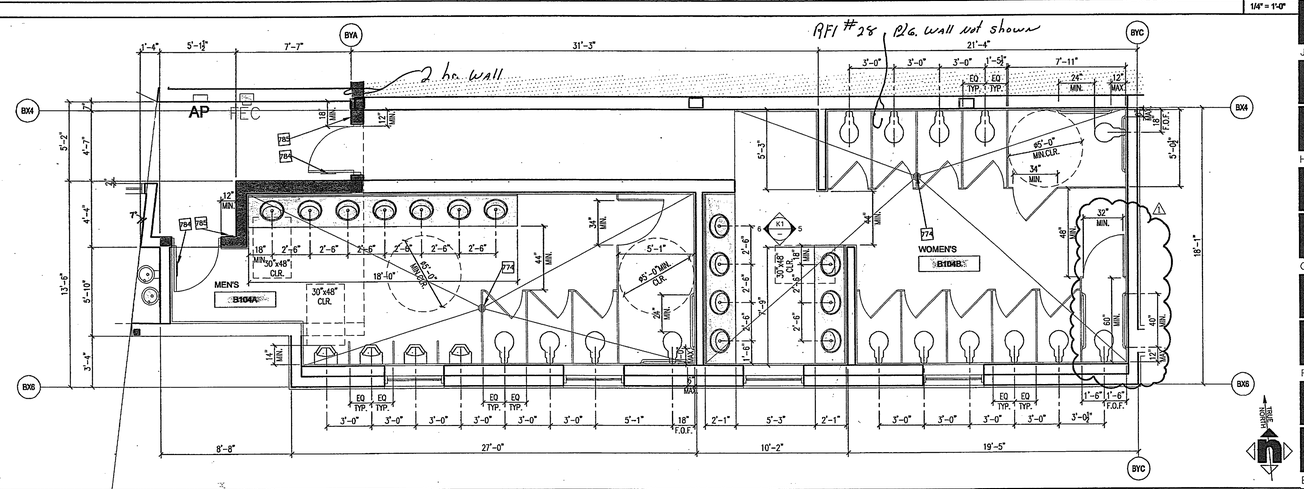

BUILDING 'B' ENLARGED FLOOR PLAN - MEN'S B104A & WOMEN'S B104 — E1

1/4" = 1'-0"

Face of shedding line
@ covered walkway

AS BUILT

HMC ARCHITECTS
Architecture Interiors Planning
3546 CONCOURS STREET
ONTARIO, CALIFORNIA 91764
Telephone: 909 . 989 . 9979
Fax: 909 . 483 . 1400
www. hmcarchitects .com

#	ENLARGED FLOOR PLAN / INT. ELEVATION KEYNOTES	DETAIL
751	SURFACE-MOUNTED SOAP DISPENSER	SEE SPECS.
752	SURFACE-MOUNTED TOILET SEAT COVER DISPENSER	SEE SPECS.
753	COMBO UNIT: RECESSED PAPER TOWEL DISPENSER & WASTE RECEPTACLE	SEE SPECS.
754	ACCESSIBLE TOILET TISSUE DISPENSER (SEMI-RECESSED, 3" MAX. PROJECTION AND 1 1/2" MIN. CLR TO GRAB BAR.)	SEE SPECS.
755	18"x36" MIRROR W/ STAINLESS STEEL FRAME	E14 / A10.13
756	GRAB BARS: 36" AT REAR & 42" AT SIDE	N1 / A10.10
757	GRAB BAR (40" MIN.)	N1 / A10.10
758	RECESSED SEAT COVER DISPENSER	SEE SPECS.
759	RECESSED SANITARY NAPKIN / TAMPON VENDOR	SEE SPECS.
760	PAINT FINISH - REFER TO SPECS. SECTION 09050	SEE SPECS.
761	MIRROR W/ STAINLESS STEEL FRAME	E14 / A10.13
762	HAND DRYER	SEE SPECS.
763	4" CERAMIC TILE COVED BASE	J1 / A10.5.1
764	CERAMIC TILE	J7 / A10.5..1
765	TOILET PARTITION	E11 / A10.13
766	ACCESSIBLE HIGH-LOW DRINKING FOUNTAIN - PER PLUMBING DWGS.	J7 / A10.13
767	FIBER REINFORCED POLYESTER (FRP) PANELS	N7, N11 & N14 / A10.5.1
768	URINAL SCREEN	E11 / A10.13
769	SURFACE-MOUNTED TOILET TISSUE DISPENSER	SEE SPECS.
770	PARTITION-MOUNTED TOILET TISSUE DISPENSER	SEE SPECS.
771	MOP RACK	SEE SPECS.
772	MOP SINK	SEE PLUMB.
773	QUARTZ SURFACING COUNTERTOP	SEE SPECS.
774	FLOOR DRAIN, 2% MAX. SLOPE TO DRAIN	E1 / A10.5.1
775	FLOOR MOUNTED A.D.A. WATER CLOSET	SEE PLUMB.
776	FLOOR MOUNTED WATER CLOSET	SEE PLUMB.
777	LAVATORY, FOR KNEE AND TOE SPACE REQUIREMENT	A7 / A10.10 & A7 / A10.12
778	URINAL	SEE PLUMB.
779	A.D.A. URINAL	SEE PLUMB.
780	36" WIDE TOILET STALL DOOR	SEE SPECS.
781	24" WIDE TOILET STALL DOOR	SEE SPECS.
782	INSULATED JACK ON HOT WATER AND DRAIN PIPES	A7 / A10.10
783	FLUSH HANDLE TO BE ON THE WIDE SIDE OF COMPARTMENT	
784	ACCESSIBLE DOOR SIGNAGE	SEE DOOR SCHEDULE
785	ACCESSIBLE WALL SIGNAGE	SEE DOOR SCHEDULE
786	RECESSED SANITARY NAPKIN DISPOSAL	SEE SPECS.
787	SURFACE-MOUNTED SANITARY NAPKIN DISPOSAL	SEE SPECS.
788	RECESSED SANITARY NAPKIN DISPOSAL	SEE SPECS.

ENLARGED FLOOR PLAN / INT. ELEVATION GENERAL NOTES

1. REFER TO A1/A10.10 FOR FIXTURE AND ACCESSORY MOUNTING HEIGHTS

FLOOR PLAN LEGEND

- NON RATED WALL
- 1 HOUR RATED WALL
- 2 HOUR RATED WALL
- NON RATED, NON BEARING METAL STUD WALL SEE DETAIL E14/A10.5
- FEC — FIRE EXTINGUISHER & CABINET
- DEPRESSED CONC. SLAB PER STRUCTURAL

Key Plan

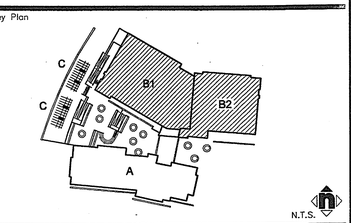

Consultant's Seal

Agency Approval

Project Title

ORANGE TERRACE LIBRARY / COMMUNITY CENTER
PLAN CHECK NO. 07-1397

20010 ORANGE TERRACE PARKWAY
RIVERSIDE, CA 92508

HMC ARCHITECTS

No.	Revisions/Submissions	Date:
	Design Development Submittal	12/18/06
	Building Department Submittal	03/29/07
1	Building Department Resubmittal	05/22/07
2	Building Department Resubmittal / QA QC Review	06/22/07

Drawing Title **BUILDING "B" - ENLARGED TOILET PLANS & INT. ELEV.**

Architect's Seal: LICENSED ARCHITECT — CHRISTOPHER ROBERT TAYLOR — NO. C-19759 — REV. 02-24-09 — STATE OF CALIFORNIA

Designed:	SS	Project No.	2340001
Drawn:	XL	Scale:	AS NOTED
Checked:	LP	Drawing No.	AB7.2
Reviewed:	RS		
Date:	06-22-07	Sheet 01 of ##	

NOT USED | N1

1/4" = 1'-0"

AS BUILT

NOT USED | J1

1/4" = 1'-0"

NOT USED | A11

1/4" = 1'-0"

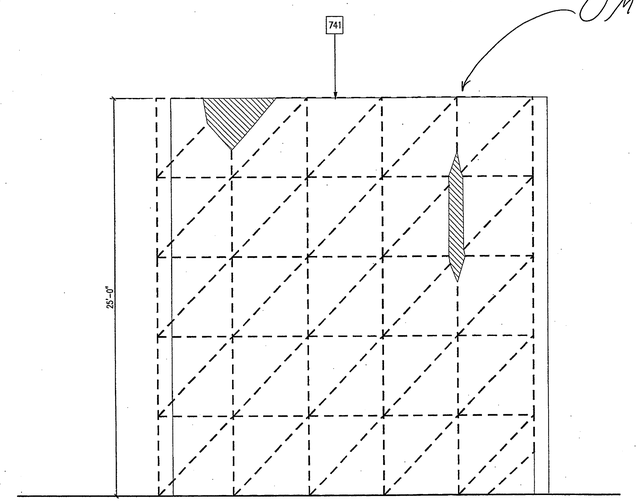

CLIMBING WALL ELEVATION | A5

1/4" = 1'-0"

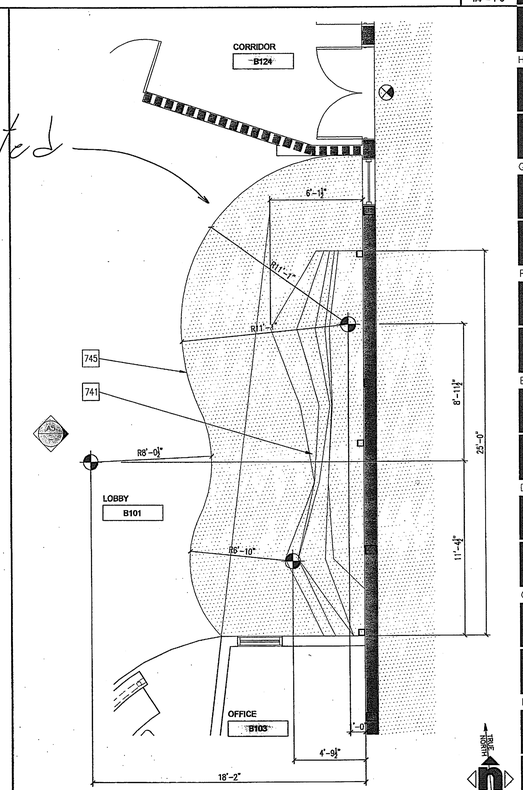

CLIMBING WALL ENLARGED PLAN | A1

1/4" = 1'-0"

HMC ARCHITECTS
Architecture Interiors Planning
3546 CONCOURS STREET
ONTARIO, CALIFORNIA 91764
Telephone: 909 . 989 . 9979
Fax: 909 . 483 . 1400
www. hmcarchitects .com

#	ENLARGED FLOOR PLAN KEY NOTES	DETAIL
701	STRUCTURAL BRACING - PAINTED	SEE STRUCT
702	STORAGE CABINETS	
703	COUNTERTOP	
704	BOOK THEFT DETECTION SYSTEM	A7 / A10.9.1
705	PROJ. UNIT SYSTEM RECESSED CLG. MTD.	E7 / A10.9.4
706	ASSISTIVE LISTENING SIGN	E11 / A10.4.1
707	SINK	SEE PLUMBING
708	DRINKING FOUNTAIN	J7 / A10.13
709	FIRE EXTINGUISHER AND CABINET	E11 / A10.5.2
710	TACKABLE SURFACE	
711	FIRE SIGNAGE OCCUPANT LOAD ROOM CAPACITY SIGN	A11 / A10.4.1
712	FURRED WALL	DETAIL
713	UPPER CASEWORK	A10.12
714	LOWER CASEWORK	A10.12
715	LINE OF SOFFIT ABOVE	
716	BASE CABINET W/ SINK	A1 / A10.12
717	EXIT SIGN	E7 / A10.4.1
718	STRUCTURAL STEEL	SEE STRUCT.
719	EXIT ROUTE SIGN	A7 / A10.4.1
720	FOLDING PARTITION	SEE SPECS.
721	SCOREBOARD	SEE SPECS.
722	SHOT CLOCK	SEE SPECS.
723	BASKETBALL BACKBOARD: RETRACTABLE	SEE SPECS.
724	GAME STRIPING	A10.4.3
725	BLEACHER COMPANION SEATING	
726	PROTECTIVE WALL PADDING	AB8.1 & AB8.2
727	HIGH IMPACT RESISTANT GYP. BD. SURFACE	
728	TELESCOPING BLEACHERS	SEE SPECS.
729	MAIN BASKETBALL COURT	A1 / A10.4.3
730	SECONDARY BASKETBALL COURT	J1 / A10.4.3
731	MAIN VOLLEYBALL COURT	A7 / A10.4.3
732	SECONDARY VOLLEYBALL COURT	J7 / A10.4.3
733	GYM STRIPING CONTROL POINT SEE A10-4.3 FOR STRIPING LAYOUT	
734	VOLLEYBALL FLOOR SLEEVES	N7 / A10.9.1
735	LINE OF WOOD FLOOR EXTENT	
736	ELECTRICAL FLOOR POCKET	SEE ELECT.
737	CONCEALED ROOF & OVERFLOW DRAIN	A4 / A10.6
738	LINE OF BLEACHERS IN THE CLOSED POSITION	
739	POST SLEEVE, SEE AB7.1 & STRIPING DETAILS FOR LOCATION	N7 / A10.9.1
740	GYMNASIUM WOOD FLOORING	E4 / A10.9.1
741	CLIMBING WALL - ATTACHED TO STRUCTURAL STEEL COLUMNS PER CLIMBING WALL MANUFACTURER'S REQUIREMENTS	SEE SPEC.
742	INTERIOR WINDOW	SEE WINDOW SCHED.
743	PAPER TOWEL DISPENSER	SEE SPEC.
744	SOAP DISPENSER	SEE SPEC.
745	CLIMBING WALL PADDED FLOORING SYSTEM	J1 / AB 9.1

FLOOR PLAN LEGEND

- NON RATED WALL
- 1 HOUR RATED WALL
- 2 HOUR RATED WALL
- NON RATED, NON BEARING METAL STUD WALL SEE DETAIL E1A/A10.5
- FEC — FIRE EXTINGUISHER & CABINET
- DEPRESSED CONC. SLAB PER STRUCTURAL

Key Plan

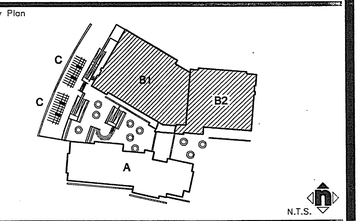

Consultant's Seal

Agency Approval

Project Title

CITY OF RIVERSIDE

ORANGE TERRACE LIBRARY / COMMUNITY CENTER

PLAN CHECK NO. 07-1397

20010 ORANGE TERRACE PARKWAY
RIVERSIDE, CA 92508

HMC ARCHITECTS

No.	Revisions/Submissions	Date:
	Design Development Submittal	12/18/06
	Building Department Submittal	03/29/07
1	Building Department Resubmittal	05/22/07
2	Building Department Resubmittal / QA QC Review	06/22/07

Drawing Title

BUILDING "B" ENLARGED FLOOR PLANS

Architect's Seal

LICENSED ARCHITECT — CHRISTOPHER RAYNER TAYLOR — LICENSE NO. C-19759 — EXP. 02-24-09 — STATE OF CALIFORNIA

Designed: SS	Project No. 2340001
Drawn: MM	Scale: AS NOTED
Checked: LP	Drawing No.
Reviewed: RS	AB7.3
Date: 06-22-07	Sheet 01 of ##

File Name: N:\2005 Jobs\2340 City of Riverside - Diffenbaugh\001-000\18-CAD\Sheets\AB7.3 BUILDING B ENLARGED FLOOR PLANS.dwg Jun 21,2007-1:01pm

PLEASE RECYCLE AB7.3 BUILDING B ENLARGED FLOOR PLANS.DWG

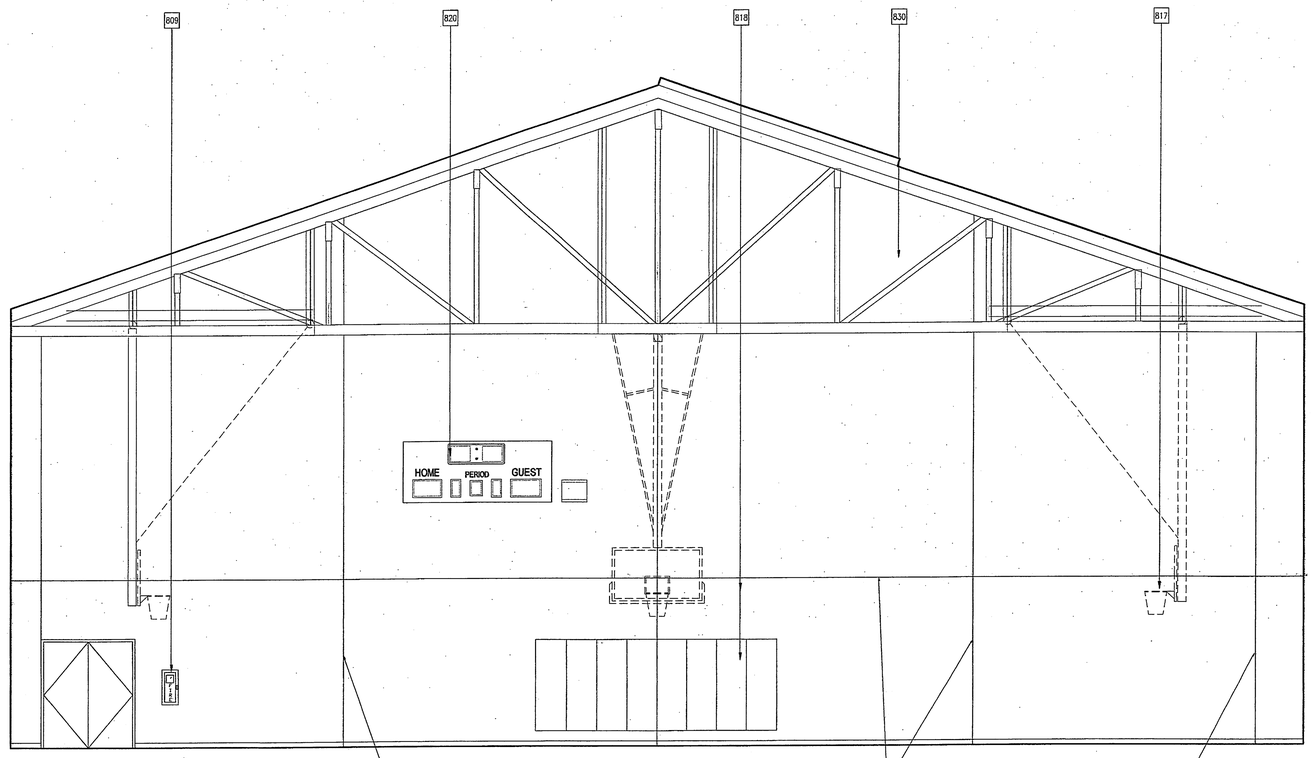

1 EAST ELEVATION

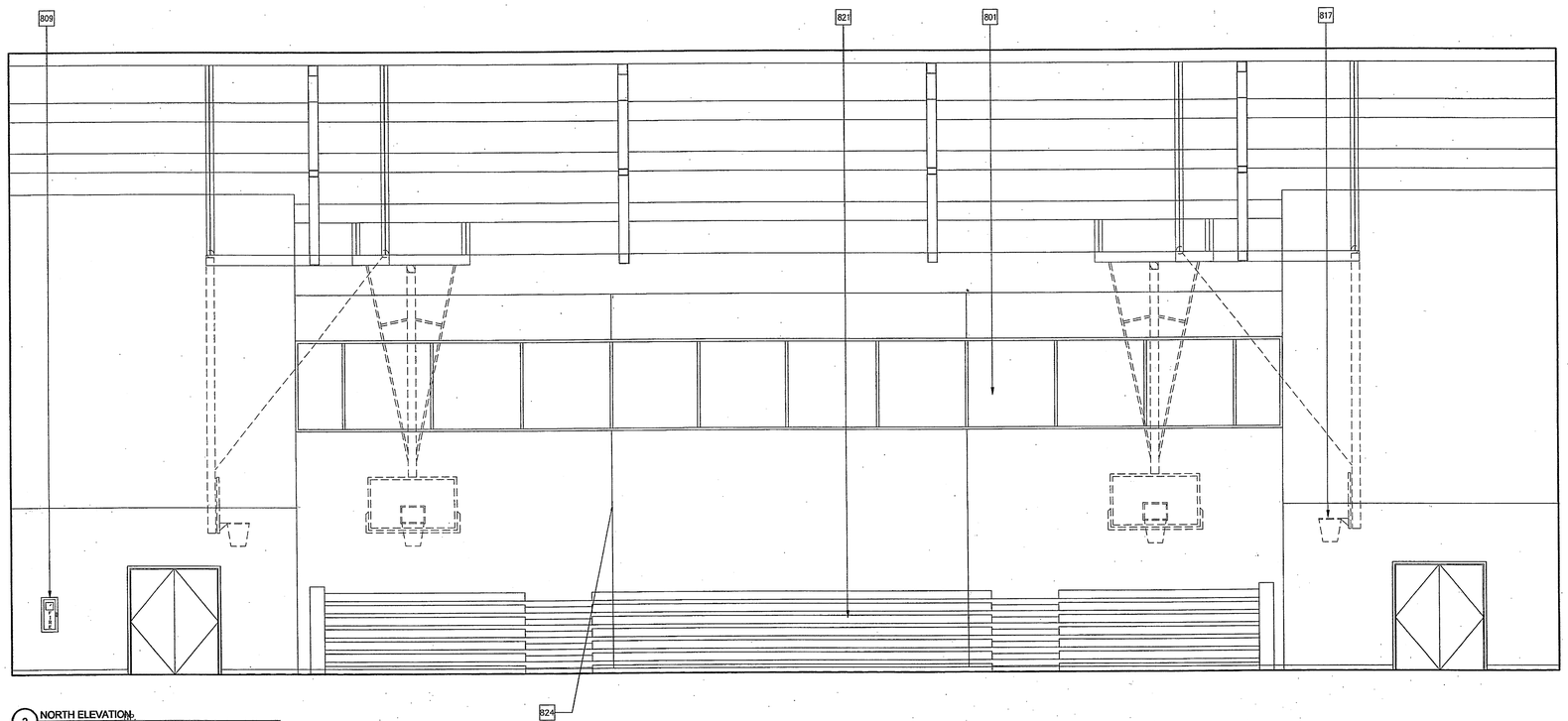

2 NORTH ELEVATION

AS BUILT

HMC ARCHITECTS
Architecture Interiors Planning
3546 CONCOURS STREET
ONTARIO, CALIFORNIA 91764
Telephone: 909 . 989 . 9979
Fax: 909 . 483 . 1400
www. hmcarchitects .com

#	INTERIOR ELEVATION KEY NOTES	DETAIL
801	EXTERIOR WINDOW	SEE WINDOW SCHEDULE
802	INTERIOR WINDOW	SEE WINDOW SCHEDULE
803	TEMPERED GLASS DOORS	
804	GYPSUM BOARD - PAINTED	A10.9.3 & A10.9.4
805	GYPSUM BOARD SOFFIT - PAINTED	A10.9.4
806	TOP SET BASE	
807	ACCESSIBLE SINK	SEE PLUMBING
808	DRINKING FOUNTAIN	J7/A10.13
809	FIRE EXTINGUISHER AND CABINET	E11 / A10.5.1
810	TACKABLE SURFACE	
811	SURFACE MOUNTED CLOCK	SEE ELEC.
812	EXPOSED MECHANICAL DUCTWORK - PAINTED	SEE MECH.
813	MECHANICAL REGISTER	SEE MECH.
814	ELECTRICAL LIGHT FIXTURE	SEE ELEC.
815	BASE CABINET W/ SINK	A1/ A10.12
816	PROJECTION SCREEN	E7 / A10.9.4
817	RETRACTABLE BASKETBALL BACKBOARD	SEE STRUCT.
818	PROTECTIVE WALL PADDING	SEE SPECS.
819	HIGH IMPACT RESISTANT GYPSUM WALL SURFACE - PAINTED	
820	SCOREBOARD	SEE SPECS.
821	TELESCOPING BLEACHERS	SEE SPECS.
822	CASEWORK	
823	4" BASE	
824	1/4" REVEAL CHANNEL	A11 / A10.5.1
825	LOCKER - 18"W x 18"H x 72" HIGH	SEE SPECS.
826	CLIMBING WALL	A1 / A87.3
827	RECEPTION DESK	
828	SOAP DISPENSER	SEE SPECS.
829	PAPER TOWEL DISPENSER	SEE SPECS.
830	STEEL TRUSS	SEE STRUCTURAL
831	FOLDING PARTITION	SEE SPECS.
832	CANOPY	E11 / A10.9.3
833	LINE OF SOFFIT ABOVE	SEE RCP
834	ACCESSIBLE BENCH, 4' W X 2' D	J11/A10.9.1

INTERIOR ELEVATION NOTES

1. FOR TYPICAL SYMBOLS AND ABBREVIATIONS, REFER TO SHEET G1.2
2. REFER TO DETAILS A1/A10.10 FOR STANDARD TOILET FIXTURE AND ACCESSORIES MOUNTING HEIGHTS/DIMENSIONS
3. WATER CLOSET FLUSH CONTROLS SHALL BE MOUNTED ON THE WIDE SIDE OF ACCESSIBLE STALLS. COORDINATE LOCATION TO AVOID CONFLICT WITH GRAB BAR.
4. INSULATE HOT WATER & DRAIN PIPES. THERE SHALL BE NO SHARP OR ABRASIVE OBJECTS OR SURFACES UNDER LAVATORIES OR SINKS.
5. WHERE A WALL SURFACE IS NOT ELEVATED, MATCH ADJACENT WALL FINISH.
6. PROVIDE PLASTIC LAMINATE FINISH AT ALL EXPOSED CASEWORK SURFACES INCLUDING, BUT NOT LIMITED TO: END PANELS, KNEE SPACES, NICHES AND CUBBIES. (U.N.O.)
7. WOODWORK INSTITUTE (WI) CASEWORK:
(REFER TO THE WOODWORK INSTITUTE, MANUAL OF MILLWORK)

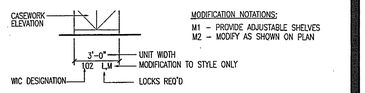

Key Plan

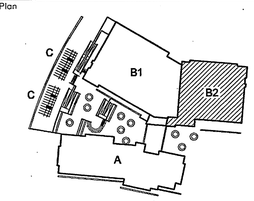

Consultant's Seal

Agency Approval

Project Title

CITY OF RIVERSIDE

ORANGE TERRACE LIBRARY / COMMUNITY CENTER

PLAN CHECK NO. 07-1397

20010 ORANGE TERRACE PARKWAY
RIVERSIDE, CA 92508

SM HMC ARCHITECTS

No.	Revisions/Submissions	Date:
	Design Development Submittal	12/18/06
	Building Department Submittal	03/29/07
1	Building Department Resubmittal	05/22/07
2	Building Department Resubmittal / QA QC Review	06/22/07

Drawing Title

BUILDING "B" INTERIOR ELEVATIONS

Architect's Seal

LICENSED ARCHITECT
CHRISTOPHER BRIAN TAYLOR
LICENSE NO. C-19759
REN. 02-24-09
STATE OF CALIFORNIA

Designed: SS	Project No. 2340001
Drawn: XL/MM	Scale: AS NOTED
Checked: LP	Drawing No.
Reviewed: RS	AB8.1
Date: 06-22-07	Sheet 01 of ##

GYMNASIUM - B105 | A1 | 1/4" = 1'-0"

File Name: N:\2005 Jobs\2340 City of Riverside – Diffenbaugh\001-000\18-CAD\Sheets\AB8.1 BUILDING B INTERIOR ELEVATIONS.dwg Jun 21,2007-1:01pm

PLEASE RECYCLE AB8.1 BUILDING B INTERIOR ELEVATIONS.DWG

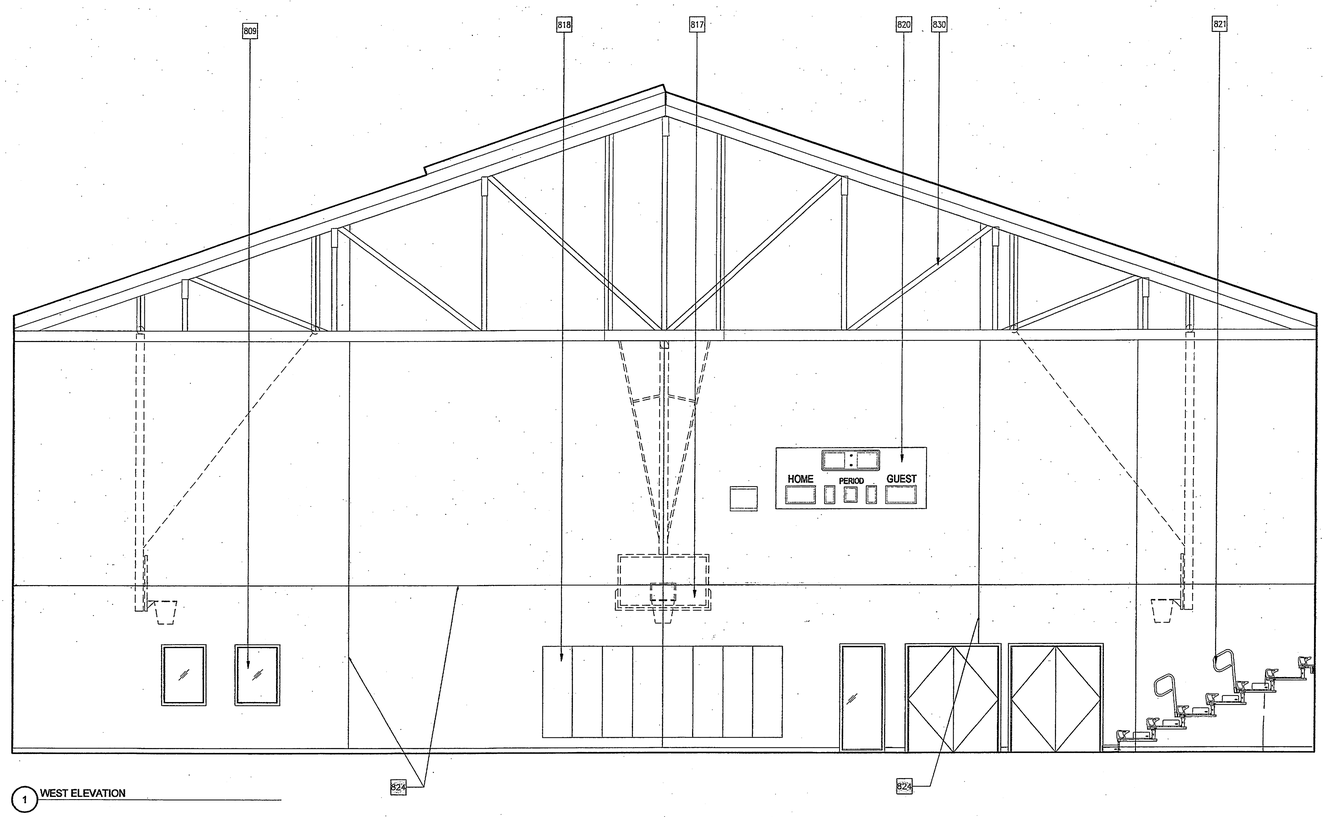

1 WEST ELEVATION

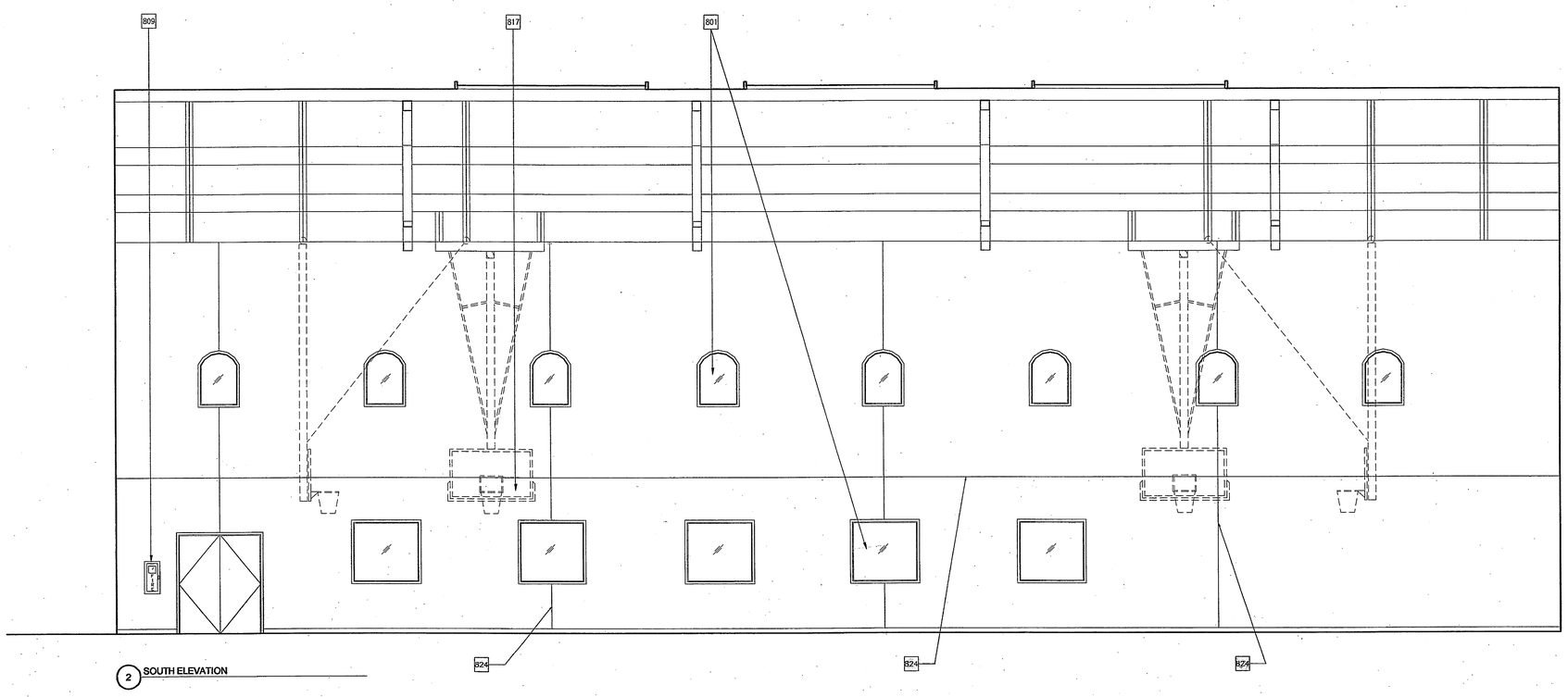

2 SOUTH ELEVATION

AS BUILT

HMC ARCHITECTS
3546 CONCOURS STREET
ONTARIO, CALIFORNIA 91764
Telephone: 909 . 989 . 9979
Fax: 909 . 483 . 1400
www. hmcarchitects .com
Architecture Interiors Planning

#	INTERIOR ELEVATION KEY NOTES	DETAIL
801	EXTERIOR WINDOW	SEE WINDOW SCHEDULE
802	INTERIOR WINDOW	SEE WINDOW SCHEDULE
803	TEMPERED GLASS DOORS	
804	GYPSUM BOARD - PAINTED	A10.9.3 & A10.9.4
805	GYPSUM BOARD SOFFIT - PAINTED	A10.9.4
806	TOP SET BASE	
807	ACCESSIBLE SINK	SEE PLUMBING
808	DRINKING FOUNTAIN	J7/A10.13
809	FIRE EXTINGUISHER AND CABINET	E11/A10.5.1
810	TACKABLE SURFACE	
811	SURFACE MOUNTED CLOCK	SEE ELEC.
812	EXPOSED MECHANICAL DUCTWORK - PAINTED	SEE MECH.
813	MECHANICAL REGISTER	SEE MECH.
814	ELECTRICAL LIGHT FIXTURE	SEE ELEC.
815	BASE CABINET W/ SINK	A1/A10.12
816	PROJECTION SCREEN	E7/A10.9.4
817	RETRACTABLE BASKETBALL BACKBOARD	SEE STRUCT.
818	PROTECTIVE WALL PADDING	SEE SPECS.
819	HIGH IMPACT RESISTANT GYPSUM WALL SURFACE - PAINTED	
820	SCOREBOARD	SEE SPECS.
821	TELESCOPING BLEACHERS	SEE SPECS.
822	CASEWORK	
823	4" BASE	
824	1/4" REVEAL CHANNEL	A11/A10.5.1
825	LOCKER - 18"W x 18"H x 72" HIGH	SEE SPECS.
826	CLIMBING WALL	A1/A57.3
827	RECEPTION DESK	
828	SOAP DISPENSER	SEE SPECS.
829	PAPER TOWEL DISPENSER	SEE SPECS.
830	STEEL TRUSS	SEE STRUCTURAL
831	FOLDING PARTITION	SEE SPECS.
832	CANOPY	E11/A10.9.3
833	LINE OF SOFFIT ABOVE	SEE RCP
834	ACCESSIBLE BENCH, 4'W X 2'D	J11/A10.9.1

INTERIOR ELEVATION NOTES

1. FOR TYPICAL SYMBOLS AND ABBREVIATIONS, REFER TO SHEET G1.2
2. REFER TO DETAILS A1/A10.10 FOR STANDARD TOILET FIXTURE AND ACCESSORIES MOUNTING HEIGHTS/DIMENSIONS
3. WATER CLOSET FLUSH CONTROLS SHALL BE MOUNTED ON THE WIDE SIDE OF ACCESSIBLE STALLS. COORDINATE LOCATION TO AVOID CONFLICT WITH GRAB BAR.
4. INSULATE HOT WATER & DRAIN PIPES. THERE SHALL BE NO SHARP OR ABRASIVE OBJECTS OR SURFACES UNDER LAVATORIES OR SINKS.
5. WHERE A WALL SURFACE IS NOT ELEVATED, MATCH ADJACENT WALL FINISH.
6. PROVIDE PLASTIC LAMINATE FINISH AT ALL EXPOSED CASEWORK SURFACES INCLUDING, BUT NOT LIMITED TO: END PANELS, KNEE SPACES, NICHES AND CUBBIES. (U.N.O.)
7. WOODWORK INSTITUTE (WI) CASEWORK:
(REFER TO THE WOODWORK INSTITUTE, MANUAL OF MILLWORK)

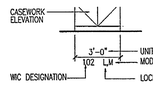

MODIFICATION NOTATIONS:
M1 – PROVIDE ADJUSTABLE SHELVES
M2 – MODIFY AS SHOWN ON PLAN

Key Plan

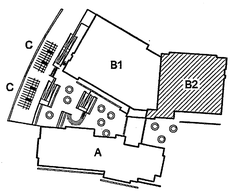

Consultant's Seal

Agency Approval

Project Title

ORANGE TERRACE LIBRARY / COMMUNITY CENTER
PLAN CHECK NO. 07-1397

20010 ORANGE TERRACE PARKWAY
RIVERSIDE, CA 92508

CITY OF RIVERSIDE

HMC ARCHITECTS

No.	Revisions/Submissions	Date:
	Design Development Submittal	12/18/06
	Building Department Submittal	03/29/07
1	Building Department Resubmittal	05/22/07
2	Building Department Resubmittal / QA QC Review	06/22/07

Drawing Title

BUILDING "B" INTERIOR ELEVATIONS

Architect's Seal

LICENSED ARCHITECT
LEHRMAN RICHARD TAYLOR
LICENSE NO. C-19759
REN. 02-24-09
STATE OF CALIFORNIA

Designed: SS	Project No. 2340001
Drawn: XL/MM	Scale: AS NOTED
Checked: LP	Drawing No.
Reviewed: RS	AB8.2
Date: 06-22-07	Sheet 01 of #

GYMNASIUM - B105 | A1 | 1/4" = 1'-0"

File Name: N:\2005 Jobs\2340 City of Riverside – Diffenbaugh\001-000\18-CAD\Sheets\AB8.2 BUILDING B INTERIOR ELEVATIONS.dwg Jun 21,2007-1:00pm

PLEASE RECYCLE AB8.2 BUILDING B INTERIOR ELEVATIONS.DWG

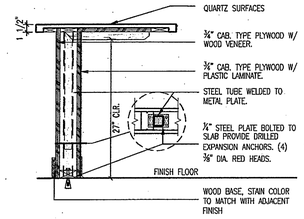

06400-25.DWG

CASEWORK SECTION — N4

1"=1'-0"

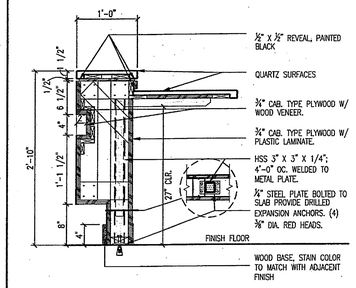

06400-27.DWG

CASEWORK SECTION — N1

1"=1'-0"

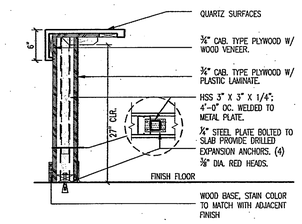

06400-34.DWG

CASEWORK SECTION — J4

1"=1'-0"

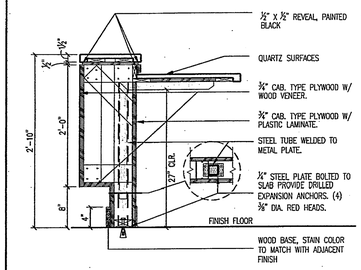

06400-28.DWG

CASEWORK SECTION — J1

1"=1'-0"

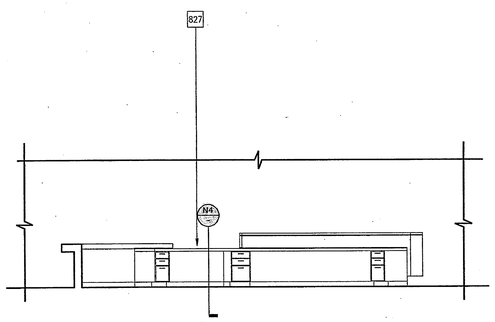

1

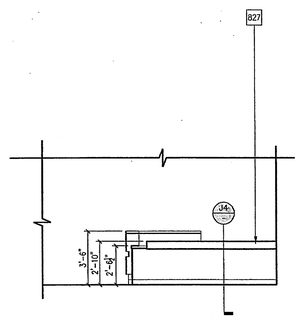

2

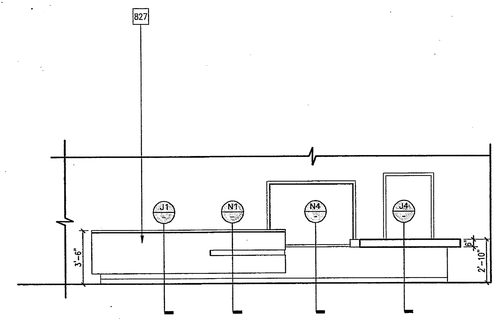

3

RECEPTION DESK ELEVATIONS — A5

1/4" = 1'-0"

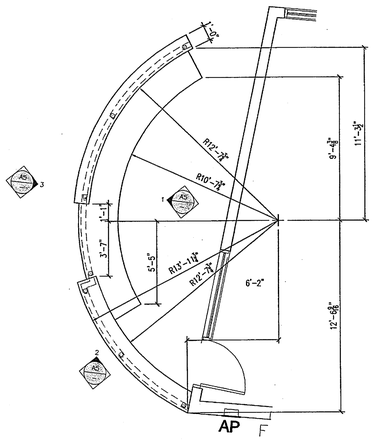

AS BUILT

RECEPTION DESK — A1

1/4" = 1'-0"

HMC ARCHITECTS
Architecture Interiors Planning
3546 CONCOURS STREET
ONTARIO, CALIFORNIA 91764
Telephone: 909 . 989 . 9979
Fax: 909 . 483 . 1400
www. hmcarchitects .com

#	INTERIOR ELEVATION KEY NOTES	DETAIL
801	EXTERIOR WINDOW	SEE WINDOW SCHEDULE
802	INTERIOR WINDOW	SEE WINDOW SCHEDULE
803	TEMPERED GLASS DOORS	
804	GYPSUM BOARD - PAINTED	A10.9.3 & A10.9.4
805	GYPSUM BOARD SOFFIT - PAINTED	A10.9.4
806	TOP SET BASE	
807	ACCESSIBLE SINK	SEE PLUMBING
808	DRINKING FOUNTAIN	J7/A10.13
809	FIRE EXTINGUISHER AND CABINET	E11 / A10.5.1
810	TACKABLE SURFACE	
811	SURFACE MOUNTED CLOCK	SEE ELEC.
812	EXPOSED MECHANICAL DUCTWORK - PAINTED	SEE MECH.
813	MECHANICAL REGISTER	SEE MECH.
814	ELECTRICAL LIGHT FIXTURE	SEE ELEC.
815	BASE CABINET W/ SINK	A1/ A10.12
816	PROJECTION SCREEN	E7 / A10.9.4
817	RETRACTABLE BASKETBALL BACKBOARD	SEE STRUCT.
818	PROTECTIVE WALL PADDING	SEE SPECS.
819	HIGH IMPACT RESISTANT GYPSUM WALL SURFACE - PAINTED	
820	SCOREBOARD	SEE SPECS.
821	TELESCOPING BLEACHERS	SEE SPECS.
822	CASEWORK	
823	4" BASE	
824	1/4" REVEAL CHANNEL	A11 / A10.5.1
825	LOCKER - 18"W x 18"H x 72" HIGH	SEE SPECS.
826	CLIMBING WALL	A1 / A87.3
827	RECEPTION DESK	
828	SOAP DISPENSER	SEE SPECS.
829	PAPER TOWEL DISPENSER	SEE SPECS.
830	STEEL TRUSS	SEE STRUCTURAL
831	FOLDING PARTITION	SEE SPECS.
832	CANOPY	E11 / A10.9.3
833	LINE OF SOFFIT ABOVE	SEE RCP
834	ACCESSIBLE BENCH, 4' W X 2' D	J11/A10.9.1

INTERIOR ELEVATION NOTES

1. FOR TYPICAL SYMBOLS AND ABBREVIATIONS, REFER TO SHEET G1.2
2. REFER TO DETAILS A1/A10.10 FOR STANDARD TOILET FIXTURE AND ACCESSORIES MOUNTING HEIGHTS/DIMENSIONS
3. WATER CLOSET FLUSH CONTROLS SHALL BE MOUNTED ON THE WIDE SIDE OF ACCESSIBLE STALLS. COORDINATE LOCATION TO AVOID CONFLICT WITH GRAB BAR.
4. INSULATE HOT WATER & DRAIN PIPES. THERE SHALL BE NO SHARP OR ABRASIVE OBJECTS OR SURFACES UNDER LAVATORIES OR SINKS.
5. WHERE A WALL SURFACE IS NOT ELEVATED, MATCH ADJACENT WALL FINISH.
6. PROVIDE PLASTIC LAMINATE FINISH AT ALL EXPOSED CASEWORK SURFACES INCLUDING, BUT NOT LIMITED TO: END PANELS, KNEE SPACES, NICHES AND CUBBIES. (U.N.O.)
7. WOODWORK INSTITUTE (WI) CASEWORK: (REFER TO THE WOODWORK INSTITUTE, MANUAL OF MILLWORK)

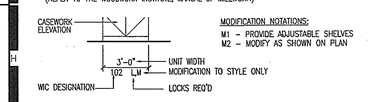

MODIFICATION NOTATIONS:
M1 – PROVIDE ADJUSTABLE SHELVES
M2 – MODIFY AS SHOWN ON PLAN

Key Plan

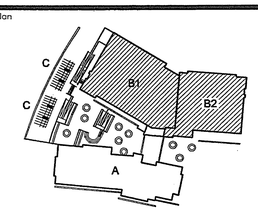

N.T.S.

Consultant's Seal

Agency Approval

Project Title

CITY OF RIVERSIDE

ORANGE TERRACE LIBRARY / COMMUNITY CENTER

PLAN CHECK NO. 07-1397

20010 ORANGE TERRACE PARKWAY
RIVERSIDE, CA 92508

HMC ARCHITECTS

No.	Revisions/Submissions	Date:
	Design Development Submittal	12/18/06
	Building Department Submittal	03/29/07
1	Building Department Resubmittal	05/22/07
2	Building Department Resubmittal / QA QC Review	06/22/07

Drawing Title

BUILDING "B" INTERIOR ELEVATIONS

Architect's Seal

LICENSED ARCHITECT — CHRISTOPHER PAUL RUSSELL TAYLOR — NO. C-19759 — EXP. 02-24-09 — STATE OF CALIFORNIA

Designed:	SS/JL	Project No.	2340001
Drawn:	JL	Scale:	AS NOTED
Checked:	LP	Drawing No.	AB8.3
Reviewed:	RS		
Date:	06-22-07	Sheet	of ##

File Name: N:\2005 Jobs\2340 City of Riverside – Diffenbaugh\001-000\18-CAD\Sheets\AB8.3 BUILDING B INTERIOR ELEVATIONS.dwg Jun 21,2007-1:00pm

PLEASE RECYCLE AB8.3 BUILDING B INTERIOR ELEVATIONS.DWG

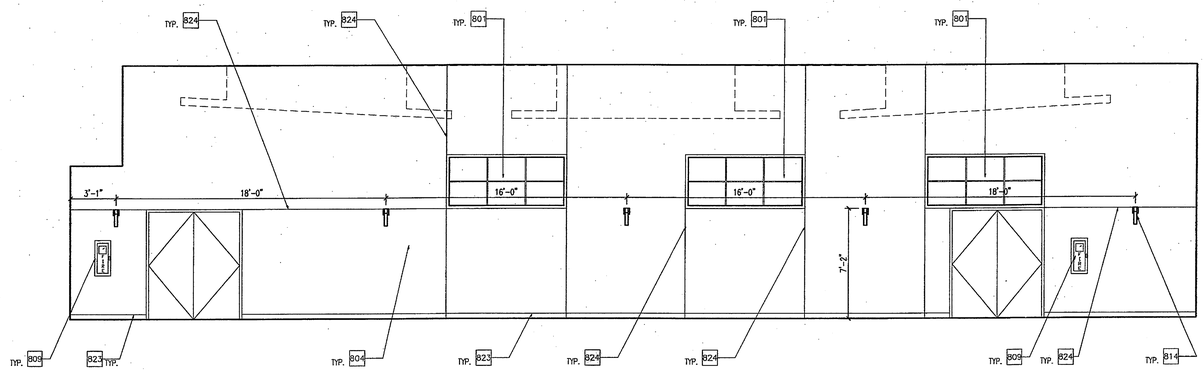

1 WEST ELEVATION

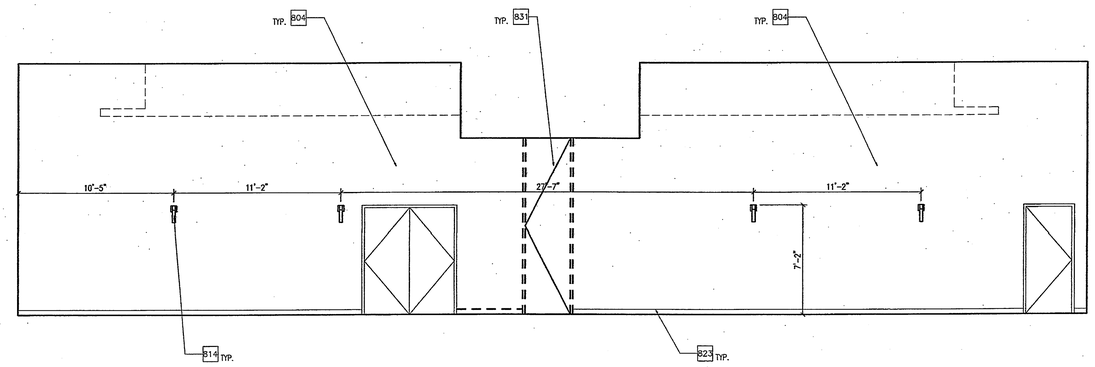

2 NORTH ELEVATION

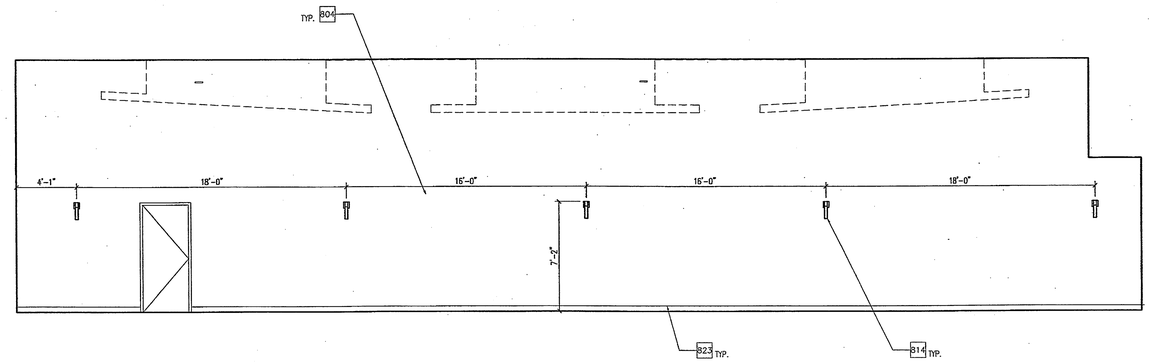

3 EAST ELEVATION

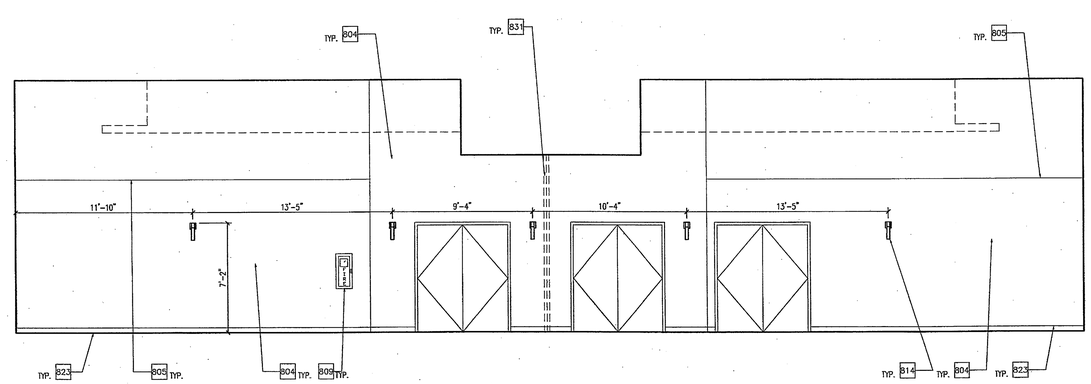

4 SOUTH ELEVATION

AS BUILT

BANQUET - B115A & B115B | A1 | 1/4" = 1'-0"

HMC ARCHITECTS
Architecture Interiors Planning
3546 CONCOURS STREET
ONTARIO, CALIFORNIA 91764
Telephone: 909 . 989 . 9979
Fax: 909 . 483 . 1400
www. hmcarchitects .com

#	INTERIOR ELEVATION KEY NOTES	DETAIL
801	EXTERIOR WINDOW	SEE WINDOW SCHEDULE
802	INTERIOR WINDOW	SEE WINDOW SCHEDULE
803	TEMPERED GLASS DOORS	
804	GYPSUM BOARD - PAINTED	A10.9.3 & A10.9.4
805	GYPSUM BOARD SOFFIT - PAINTED	A10.9.4
806	TOP SET BASE	
807	ACCESSIBLE SINK	SEE PLUMBING
808	DRINKING FOUNTAIN	J7/ A10.13
809	FIRE EXTINGUISHER AND CABINET	E11 / A10.5.1
810	TACKABLE SURFACE	
811	SURFACE MOUNTED CLOCK	SEE ELEC.
812	EXPOSED MECHANICAL DUCTWORK - PAINTED	SEE MECH.
813	MECHANICAL REGISTER	SEE MECH.
814	ELECTRICAL LIGHT FIXTURE	SEE ELEC.
815	BASE CABINET W/ SINK	A1/ A10.12
816	PROJECTION SCREEN	E7 / A10.9.4
817	RETRACTABLE BASKETBALL BACKBOARD	SEE STRUCT.
818	PROTECTIVE WALL PADDING	SEE SPECS.
819	HIGH IMPACT RESISTANT GYPSUM WALL SURFACE - PAINTED	
820	SCOREBOARD	SEE SPECS.
821	TELESCOPING BLEACHERS	SEE SPECS.
822	CASEWORK	
823	4" BASE	
824	1/4" REVEAL CHANNEL	A11/ A10.5.1
825	LOCKER - 18"W x 18"H x 72" HIGH	SEE SPECS.
826	CLIMBING WALL	A1 / A87.3
827	RECEPTION DESK	
828	SOAP DISPENSER	SEE SPECS.
829	PAPER TOWEL DISPENSER	SEE SPECS.
830	STEEL TRUSS	SEE STRUCTURAL
831	FOLDING PARTITION	SEE SPECS.
832	CANOPY	E11 / A10.9.3
833	LINE OF SOFFIT ABOVE	SEE RCP
834	ACCESSIBLE BENCH, 4' W X 2' D	J11/A10.9.1

INTERIOR ELEVATION NOTES

1. FOR TYPICAL SYMBOLS AND ABBREVIATIONS, REFER TO SHEET G1.2
2. REFER TO DETAILS A1/A10.10 FOR STANDARD TOILET FIXTURE AND ACCESSORIES MOUNTING HEIGHTS/DIMENSIONS
3. WATER CLOSET FLUSH CONTROLS SHALL BE MOUNTED ON THE WIDE SIDE OF ACCESSIBLE STALLS. COORDINATE LOCATION TO AVOID CONFLICT WITH GRAB BAR.
4. INSULATE HOT WATER & DRAIN PIPES. THERE SHALL BE NO SHARP OR ABRASIVE OBJECTS OR SURFACES UNDER LAVATORIES OR SINKS.
5. WHERE A WALL SURFACE IS NOT ELEVATED, MATCH ADJACENT WALL FINISH.
6. PROVIDE PLASTIC LAMINATE FINISH AT ALL EXPOSED CASEWORK SURFACES INCLUDING, BUT NOT LIMITED TO: END PANELS, KNEE SPACES, NICHES AND CUBBIES. (U.N.O.)
7. WOODWORK INSTITUTE (WI) CASEWORK:
   (REFER TO THE WOODWORK INSTITUTE, MANUAL OF MILLWORK)

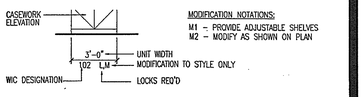

Key Plan

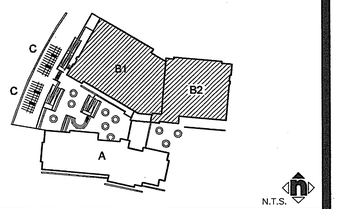

Consultant's Seal

Agency Approval

Project Title

CITY OF RIVERSIDE

ORANGE TERRACE LIBRARY / COMMUNITY CENTER
PLAN CHECK NO. 07-1397

20010 ORANGE TERRACE PARKWAY
RIVERSIDE, CA 92508

HMC ARCHITECTS

No.	Revisions/Submissions	Date:
	Design Development Submittal	12/18/06
	Building Department Submittal	03/29/07
1	Building Department Resubmittal	05/22/07
2	Building Department Resubmittal / OA QC Review	06/22/07

Drawing Title

BUILDING "B" INTERIOR ELEVATIONS

Architect's Seal

LICENSED ARCHITECT
LARRY PUGH
NO. C-19759
REN. 02-24-09
STATE OF CALIFORNIA

Designed: SS	Project No. 2340001
Drawn: SS	Scale: AS NOTED
Checked: LP	Drawing No.
Reviewed: RS	AB8.4
Date: 06-22-07	Sheet of ##

File Name: N:\2005 Jobs\2340 City of Riverside - Diffenbaugh\001-000\18-CAD\Sheets\AB8.4 BUILDING B INTERIOR ELEVATIONS.dwg Jun 21,2007-1:00pm

PLEASE RECYCLE AB8.4 BUILDING B INTERIOR ELEVATIONS.DWG

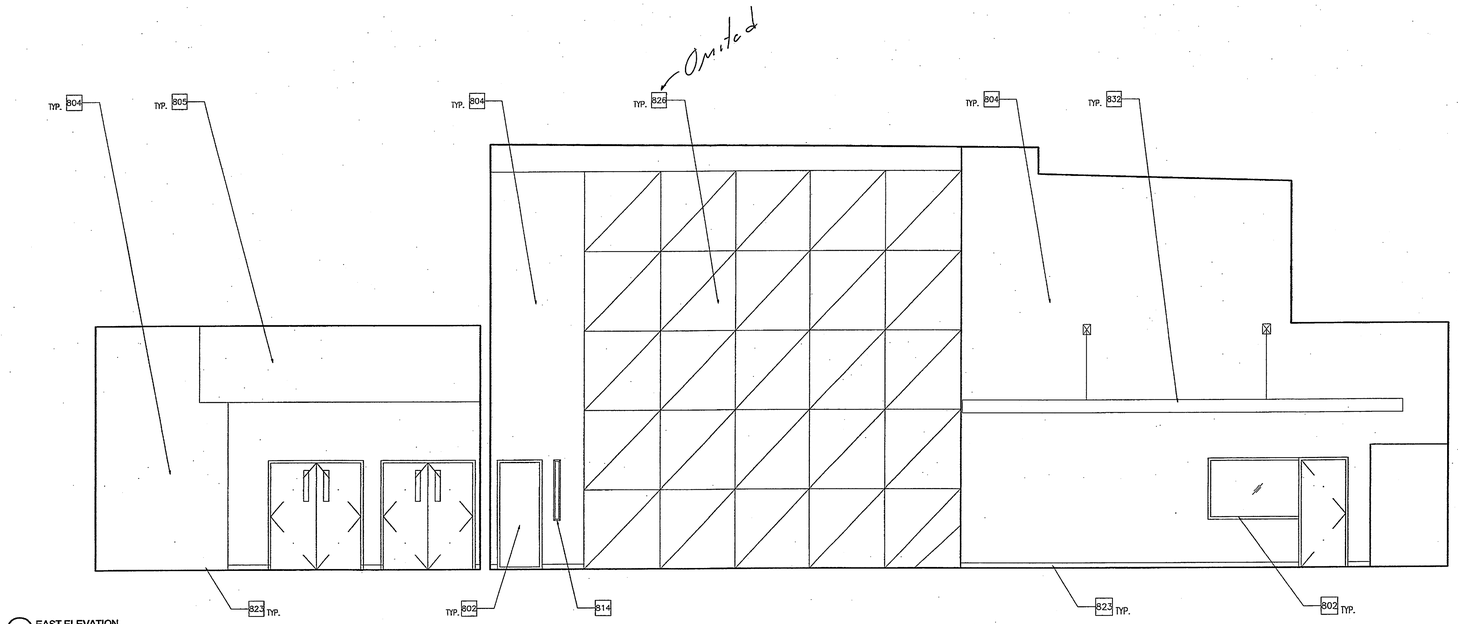

1 EAST ELEVATION

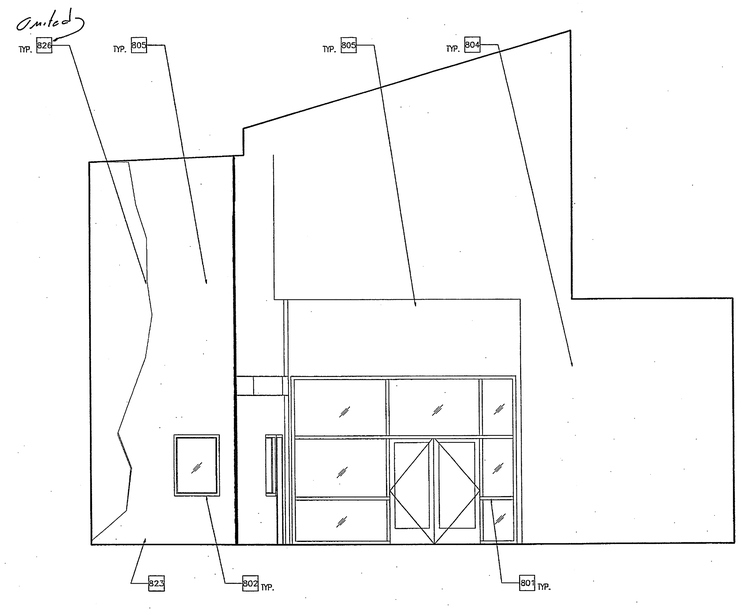

2 SOUTH ELEVATION

AS BUILT

HMC ARCHITECTS
Architecture Interiors Planning
3546 CONCOURS STREET
ONTARIO, CALIFORNIA 91764
Telephone: 909 . 989 . 9979
Fax: 909 . 483 . 1400
www. hmcarchitects .com

#	INTERIOR ELEVATION KEY NOTES	DETAIL
801	EXTERIOR WINDOW	SEE WINDOW SCHEDULE
802	INTERIOR WINDOW	SEE WINDOW SCHEDULE
803	TEMPERED GLASS DOORS	
804	GYPSUM BOARD - PAINTED	A10.9.3 & A10.9.4
805	GYPSUM BOARD SOFFIT - PAINTED	A10.9.4
806	TOP SET BASE	
807	ACCESSIBLE SINK	SEE PLUMBING
808	DRINKING FOUNTAIN	J7 / A10.13
809	FIRE EXTINGUISHER AND CABINET	E11 / A10.5.1
810	TACKABLE SURFACE	
811	SURFACE MOUNTED CLOCK	SEE ELEC.
812	EXPOSED MECHANICAL DUCTWORK - PAINTED	SEE MECH.
813	MECHANICAL REGISTER	SEE MECH.
814	ELECTRICAL LIGHT FIXTURE	SEE ELEC.
815	BASE CABINET W/ SINK	A1 / A10.12
816	PROJECTION SCREEN	E7 / A10.9.4
817	RETRACTABLE BASKETBALL BACKBOARD	SEE STRUCT.
818	PROTECTIVE WALL PADDING	SEE SPECS.
819	HIGH IMPACT RESISTANT GYPSUM WALL SURFACE - PAINTED	
820	SCOREBOARD	SEE SPECS.
821	TELESCOPING BLEACHERS	SEE SPECS.
822	CASEWORK	
823	4" BASE	
824	1/4" REVEAL CHANNEL	A11 / A10.5.1
825	LOCKER - 18"W x 18"H x 72" HIGH	SEE SPECS.
~~826~~	~~CLIMBING WALL~~ Omitted	A1 / A87.3
827	RECEPTION DESK	
828	SOAP DISPENSER	SEE SPECS.
829	PAPER TOWEL DISPENSER	SEE SPECS.
830	STEEL TRUSS	SEE STRUCTURAL
831	FOLDING PARTITION	SEE SPECS.
832	CANOPY	E11 / A10.9.3
833	LINE OF SOFFIT ABOVE	SEE RCP
834	ACCESSIBLE BENCH, 4' W X 2' D	J11/A10.9.1

INTERIOR ELEVATION NOTES

1. FOR TYPICAL SYMBOLS AND ABBREVIATIONS, REFER TO SHEET G1.2
2. REFER TO DETAILS A1/A10.10 FOR STANDARD TOILET FIXTURE AND ACCESSORIES MOUNTING HEIGHTS/DIMENSIONS
3. WATER CLOSET FLUSH CONTROLS SHALL BE MOUNTED ON THE WIDE SIDE OF ACCESSIBLE STALLS. COORDINATE LOCATION TO AVOID CONFLICT WITH GRAB BAR.
4. INSULATE HOT WATER & DRAIN PIPES. THERE SHALL BE NO SHARP OR ABRASIVE OBJECTS OR SURFACES UNDER LAVATORIES OR SINKS.
5. WHERE A WALL SURFACE IS NOT ELEVATED, MATCH ADJACENT WALL FINISH.
6. PROVIDE PLASTIC LAMINATE FINISH AT ALL EXPOSED CASEWORK SURFACES INCLUDING, BUT NOT LIMITED TO: END PANELS, KNEE SPACES, NICHES AND CUBBIES. (U.N.O.)
7. WOODWORK INSTITUTE (WI) CASEWORK: (REFER TO THE WOODWORK INSTITUTE, MANUAL OF MILLWORK)

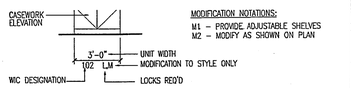

MODIFICATION NOTATIONS:
M1 – PROVIDE ADJUSTABLE SHELVES
M2 – MODIFY AS SHOWN ON PLAN

Key Plan

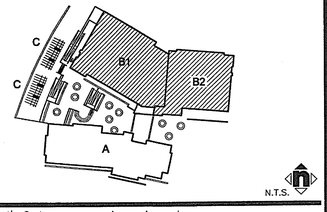

Consultant's Seal

Agency Approval

Project Title

CITY OF RIVERSIDE

ORANGE TERRACE LIBRARY / COMMUNITY CENTER

PLAN CHECK NO. 07-1397

20010 ORANGE TERRACE PARKWAY
RIVERSIDE, CA 92508

SM HMC ARCHITECTS

No.	Revisions/Submissions	Date:
	Design Development Submittal	12/18/06
	Building Department Submittal	03/29/07
1	Building Department Resubmittal	05/22/07
2	Building Department Resubmittal / QA QC Review	06/22/07

Drawing Title

BUILDING "B" INTERIOR ELEVATIONS

Architect's Seal

LICENSED ARCHITECT CHRISTOPHER RICHARDS NO. C-19759 EXP. 02-24-09 STATE OF CALIFORNIA

Designed: SS	Project No. 2340001
Drawn: SS	Scale: AS NOTED
Checked: LP	Drawing No.
Reviewed: RS	AB8.5
Date: 06-22-07	Sheet of ##

LOBBY B101 & CORRIDOR B124 | A1 | 1/4" = 1'-0"

File Name: N:\2005 Jobs\2340 City of Riverside – Diffenbaugh\001-000\18-CAD\Sheets\AB8.5 BUILDING B INTERIOR ELEVATIONS.dwg Jun 21,2007-12:59pm

PLEASE RECYCLE AB8.5 BUILDING B INTERIOR ELEVATIONS.DWG

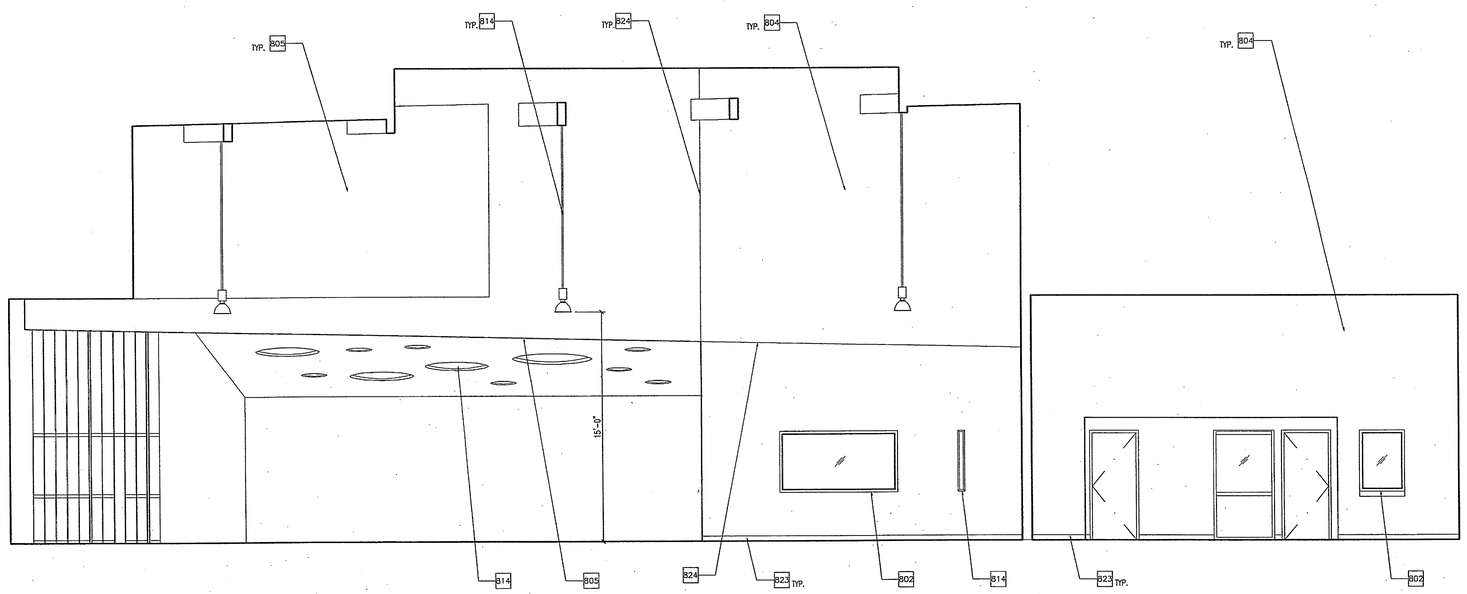

1 WEST ELEVATION

AS BUILT

LOBBY B101 & CORRIDOR B124 | A1

1/4" = 1'-0"

HMC ARCHITECTS
Architecture Interiors Planning
3546 CONCOURS STREET
ONTARIO, CALIFORNIA 91764
Telephone: 909 . 989 . 9979
Fax: 909 . 483 . 1400
www. hmcarchitects .com

#	INTERIOR ELEVATION KEY NOTES	DETAIL
801	EXTERIOR WINDOW	SEE WINDOW SCHEDULE
802	INTERIOR WINDOW	SEE WINDOW SCHEDULE
803	TEMPERED GLASS DOORS	
804	GYPSUM BOARD - PAINTED	A10.9.3 & A10.9.4
805	GYPSUM BOARD SOFFIT - PAINTED	A10.9.4
806	TOP SET BASE	
807	ACCESSIBLE SINK	SEE PLUMBING
808	DRINKING FOUNTAIN	J7/ A10.13
809	FIRE EXTINGUISHER AND CABINET	E11 / A10.5.1
810	TACKABLE SURFACE	
811	SURFACE MOUNTED CLOCK	SEE ELEC.
812	EXPOSED MECHANICAL DUCTWORK - PAINTED	SEE MECH.
813	MECHANICAL REGISTER	SEE MECH.
814	ELECTRICAL LIGHT FIXTURE	SEE ELEC.
815	BASE CABINET W/ SINK	A1/ A10.12
816	PROJECTION SCREEN	E7 / A10.9.4
817	RETRACTABLE BASKETBALL BACKBOARD	SEE STRUCT.
818	PROTECTIVE WALL PADDING	SEE SPECS.
819	HIGH IMPACT RESISTANT GYPSUM WALL SURFACE - PAINTED	
820	SCOREBOARD	SEE SPECS.
821	TELESCOPING BLEACHERS	SEE SPECS.
822	CASEWORK	
823	4" BASE	
824	1/4" REVEAL CHANNEL	A11 / A10.5.1
825	LOCKER - 18"W x 18"H x 72" HIGH	SEE SPECS.
826	CLIMBING WALL	A1 / A87.3
827	RECEPTION DESK	
828	SOAP DISPENSER	SEE SPECS.
829	PAPER TOWEL DISPENSER	SEE SPECS.
830	STEEL TRUSS	SEE STRUCTURAL
831	FOLDING PARTITION	SEE SPECS.
832	CANOPY	E11 / A10.9.3
833	LINE OF SOFFIT ABOVE	SEE RCP
834	ACCESSIBLE BENCH, 4' W X 2' D	J11/A10.9.1

INTERIOR ELEVATION NOTES

1. FOR TYPICAL SYMBOLS AND ABBREVIATIONS, REFER TO SHEET G1.2
2. REFER TO DETAILS A1/A10.10 FOR STANDARD TOILET FIXTURE AND ACCESSORIES MOUNTING HEIGHTS/DIMENSIONS
3. WATER CLOSET FLUSH CONTROLS SHALL BE MOUNTED ON THE WIDE SIDE OF ACCESSIBLE STALLS. COORDINATE LOCATION TO AVOID CONFLICT WITH GRAB BAR.
4. INSULATE HOT WATER & DRAIN PIPES. THERE SHALL BE NO SHARP OR ABRASIVE OBJECTS OR SURFACES UNDER LAVATORIES OR SINKS.
5. WHERE A WALL SURFACE IS NOT ELEVATED, MATCH ADJACENT WALL FINISH.
6. PROVIDE PLASTIC LAMINATE FINISH AT ALL EXPOSED CASEWORK. SURFACES INCLUDING, BUT NOT LIMITED TO: END PANELS, KNEE SPACES, NICHES AND CUBBIES. (U.N.O.)
7. WOODWORK INSTITUTE (WI) CASEWORK:
   (REFER TO THE WOODWORK INSTITUTE, MANUAL OF MILLWORK)

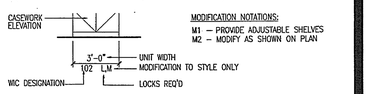

Key Plan

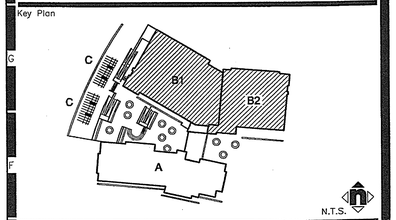

Consultant's Seal

Agency Approval

Project Title

CITY OF RIVERSIDE

ORANGE TERRACE LIBRARY / COMMUNITY CENTER
PLAN CHECK NO. 07-1397

20010 ORANGE TERRACE PARKWAY
RIVERSIDE, CA 92508

HMC ARCHITECTS

No.	Revisions/Submissions	Date:
	Design Development Submittal	12/18/06
	Building Department Submittal	03/29/07
1	Building Department Resubmittal	05/22/07
2	Building Department Resubmittal / QA QC Review	06/22/07

Drawing Title

BUILDING "B" INTERIOR ELEVATIONS

Architect's Seal

LICENSED ARCHITECT CHRISTOPHER RICHARD TAYLOR NO. C-18758 REN. 02-24-09 STATE OF CALIFORNIA

Designed: SS	Project No. 2340001
Drawn: SS	Scale: AS NOTED
Checked: LP	Drawing No.
Reviewed: RS	AB8.6
Date: 06-22-07	Sheet of #

File Name: N:\2005 Jobs\2340 City of Riverside – Diffenbaugh\001-000\18-CAD\Sheets\AB8.6 BUILDING B INTERIOR ELEVATIONS.dwg Jun 21,2007-12:59pm

PLEASE RECYCLE AB8.6 BUILDING B INTERIOR ELEVATIONS.DWG

DOOR SCHEDULE

DOOR NO.	DOOR NOMINAL SIZE WIDTH x HEIGHT	DOOR TYPE	DOOR MAT.	DOOR FINISH	DOOR GLASS	FRAME TYPE	FRAME MAT.	FRAME FINISH	FIRE RATING MIN.	DETAILS HEAD	DETAILS JAMB HINGE	DETAILS JAMB LOCK	DETAILS SILL	HARDWARE GROUP	HARDWARE EXIT DEVICE	SIGN REFER TO SHEET A10.4.1 U.N.O.	REMARKS
B101A	6'-0" x 7'-0"	F	AL	CA	--	F2	AL	BA	--	A11/A10.8.2	A11/A10.8.2	--	A7/A10.8.1	17A	PH	E7 / *A11	* SEE FLOOR PLAN FOR LOCATION (OCCUPANT LOAD = 247)
B101B	7'-0" x 7'-0"	E	HM	P	--	F2	HM	P	20	J4/A10.8.2	J4/A10.8.2	--	A1/A10.8.1	11A	PH	A7	
B103A	3'-0" x 7'-0"	A	PC	HV	--	F1	HM	P	--	J4/A10.8.2	J4/A10.8.2	--	A1/A10.8.1	03	--	--	
B103B	3'-0" x 7'-0"	J2	STL	FF	--	G1	STL	FF	90	J7/A10.8.1	E7/A10.8.1	E7/A10.8.1	J7/A10.8.1	--	--	--	RFI # 30
B103C	3'-0" x 7'-0"	J2	STL	FF	--	G1	STL	FF	90	J7/A10.8.1	E7/A10.8.1	E7/A10.8.1	J7/A10.8.1	--	--	--	RFI # 30
B104A	3'-0" x 7'-0"	A	HM	P	--	F1	HM	P	90	J4/A10.8.2	J4/A10.8.2	--	N4/A10.8.1	08	--	E1 / E4 / N14	
B104B	3'-0" x 7'-0"	A	HM	P	--	F1	HM	P	90	J4/A10.8.2	J4/A10.8.2	--	N4/A10.8.1	08	--	J1 / J4 / N14	
B105A	6'-0" x 7'-0"	E	HM	P	--	F2	HM	P	--	N1/A10.8.2	N1/A10.8.2	--	E4/A10.8.1	18	PH	E7	
B105B	6'-0" x 7'-0"	E	HM	P	--	F2	HM	P	--	N4/A10.8.2	N7/A10.8.2	--	E4/A10.8.1	18	PH	E7	
B105C	6'-0" x 7'-0"	G	MC	HV	--	F2	HM	P	90	J4/A10.8.2	J4/A10.8.2	--	A4/A10.8.1	12	PH	A7 / *A11	* SEE FLOOR PLAN FOR LOCATION (OCCUPANT LOAD = 761)
B105D	6'-0" x 7'-0"	G	MC	HV	--	F2	HM	P	90	J4/A10.8.2	J4/A10.8.2	--	A4/A10.8.1	12	PH	A7	
B105E	4'-0" x 7'-0"	J2	STL	FF	--	G2	STL	FF	90	J7/A10.8.1	E7/A10.8.1	E7/A10.8.1	J7/A10.8.1	--	--	--	RFI #30
B106	6'-0" x 7'-0"	G	PC	HV	--	F2	HM	P	20	J4/A10.8.2	J4/A10.8.2	--	N4/A10.8.1	11	--	--	
B107	6'-0" x 7'-0"	G	PC	HV	--	F2	HM	P	20	J4/A10.8.2	J4/A10.8.2	--	N4/A10.8.1	11	--	--	
B108	7'-0" x 7'-0"	E	HM	P	--	F2	HM	P	20	J4/A10.8.2	J4/A10.8.2	--	A4/A10.8.1	11A	PH	E7	
B109	3'-0" x 7'-0"	B	PC	HV	--	F1	HM	P	--	J4/A10.8.2	J4/A10.8.2	--	J4/A10.8.3	08	--	--	
B110A	3'-0" x 7'-0"	B	PC	HV	--	F2	HM	P	20	J4/A10.8.2	J4/A10.8.2	--	N4/A10.8.1	09A	PH	A7 / *A11	* SEE FLOOR PLAN FOR LOCATION (OCCUPANT LOAD = 86)
B110B	3'-0" x 7'-0"	A	PC	HV	--	F1	HM	P	--	J4/A10.8.2	J4/A10.8.2	--	E1/A10.8.1	01	PH	A7	
B111	3'-0" x 7'-0"	A	PC	HV	--	F1	HM	P	20	J4/A10.8.2	J4/A10.8.2	--	N4/A10.8.3	09	--	--	
B112A	3'-0" x 7'-0"	B	PC	HV	--	F1	HM	P	20	J4/A10.8.2	J4/A10.8.2	--	N4/A10.8.1	09	--	--	
B112B	4'-0" x 7'-0"	J2	STL	FF	--	G2	STL	FF	45	J7/A10.8.1	E7/A10.8.1	E7/A10.8.1	J4/A10.8.3	--	--	--	RFI #30
B113A	3'-0" x 7'-0"	C	PC	HV	--	F1	HM	P	--	J4/A10.8.2	J4/A10.8.2	--	J1/A10.8.1	02	--	--	
B113B	3'-0" x 4'-0"	J1	STL	FF	--	G1	STL	FF	45	J11/A10.8.1	E11/A10.8.1	E11/A10.8.1	J4/A10.8.3	--	--	--	PROVIDE WINDOW TYPE "BR" WITH "RATED" STAINLESS STEEL COUNTERTOP
B114A	6'-0" x 7'-0"	E	HM	P	--	F2	HM	P	--	N1/A10.8.2	N1/A10.8.2	--	J4/A10.8.1	18	PH	E7	
B114B	3'-0" x 7'-0"	A	PC	HV	--	F1	HM	P	20	J4/A10.8.2	J4/A10.8.2	--	J1/A10.8.1	09	--	--	
B114C	3'-0" x 7'-0"	C	PC	HV	--	F1	HM	P	20	J4/A10.8.2	J4/A10.8.2	--	N1/A10.8.1	09	--	--	
B115A	6'-0" x 7'-0"	E	HM	P	--	F2	HM	P	--	N1/A10.8.2	N1/A10.8.2	--	J4/A10.8.1	18	PH	E7	
B115B	6'-0" x 7'-0"	E	HM	P	--	F2	HM	P	--	N4/A10.8.2	N7/A10.8.2	--	J4/A10.8.1	18	PH	E7	
B115C	6'-0" x 7'-0"	E	PC	HV	--	F2	HM	P	20	J4/A10.8.2	J4/A10.8.2	--	N4/A10.8.1	10	PH	A7 / *A11	* SEE FLOOR PLAN FOR LOCATION (OCCUPANT LOAD = 272)
B115D	6'-0" x 7'-0"	E	PC	HV	--	F2	HM	P	20	J4/A10.8.2	J4/A10.8.2	--	N4/A10.8.1	10	PH	A7/ *A11	* SEE FLOOR PLAN FOR LOCATION (OCCUPANT LOAD = 183)
B115E	ADA COMPLIANT FOLDING PANEL PARTITION PASS DOOR WITH EXIT SIGN AND PANIC HARDWARE PER MANUFACTURER														PH	A7	
B116	6'-0" x 7'-0"	E	PC	HV	--	F2	HM	P	20	J4/A10.8.2	J4/A10.8.2	--	N4/A10.8.3	11	--	--	
B118	6'-0" x 8'-0"	H	HM	P	--	F1	HM	P	--	N1/A10.8.2	N1/A10.8.2	--	J4/A10.8.1	19	PH	--	
B119	3'-0" x 7'-0"	A	PC	HV	--	F1	HM	P	--	J4/A10.8.2	J4/A10.8.2	--	J1/A10.8.1	02	--	--	PROVIDE 1" UNDERCUT DOOR
B120	3'-0" x 7'-0"	A	PC	HV	--	F1	HM	P	--	J4/A10.8.2	J4/A10.8.2	--	N4/A10.8.1	07	--	--	
B121	6'-0" x 7'-0"	E	PC	HV	--	F2	HM	P	20	J4/A10.8.2	J4/A10.8.2	--	N4/A10.8.1	11	--	--	
B122	3'-0" x 7'-0"	A	HM	P	--	F1	HM	P	--	N4/A10.8.2	N7/A10.8.2	--	A1/A10.8.1	15	--	--	
B123A	6'-0" x 7'-0"	F	AL	BA	--	F2	AL	BA	--	A11/A10.8.2	A11/A10.8.2	--	A7/A10.8.1	17B	PH	E7	
B123B	6'-0" x 7'-0"	F	AL	BA	--	F2	AL	BA	--	A11/A10.8.2	A11/A10.8.2	--	A7/A10.8.1	17B	PH	E7	
B124A	6'-0" x 7'-0"	F	AL	BA	--	F2	AL	BA	--	A11/A10.8.2	A11/A10.8.2	--	A7/A10.8.1	17	PH	E7	
B124B	6'-0" x 7'-0"	F	AL	BA	--	F2	AL	BA	--	A11/A10.8.2	A11/A10.8.2	--	A7/A10.8.1	17	PH	E7	

ROOM FINISH SCHEDULE

ROOM NO.	ROOM NAME	FLOOR MAT.	FLOOR COL.	BASE MAT.	BASE COL.	WAINSCOT MAT.	WAINSCOT COL.	WAINSCOT HEIGHT	WALLS NORTH MAT.	NORTH FIN.	NORTH COL.	EAST MAT.	EAST FIN.	EAST COL.	SOUTH MAT.	SOUTH FIN.	SOUTH COL.	WEST MAT.	WEST FIN.	WEST COL.	CEILING MAT.	CEILING FIN.	CEILING COL.	CEILING HEIGHT	REMARKS
B101	LOBBY	CF	CF*	B					GB	PE	P1	GB	PE	P1	GB	PE	P1	GB	PE	P1	GB	--	--		* SEE FLOOR PATTERN PLAN AB9.3
B102	RECEPTION	C/CF	C2/CF*	B					GB	PE	P1	GB	PE	P1	GB	PE	P1	GB	PE	P1	OTS	--	--		* SEE FLOOR PATTERN PLAN AB9.3
B103	OFFICE	C	C2	B					GB	PE	P1	GB	PE	P1	GB	PE	P1	GB	PE	P1	AC	FF	AC1	9'-6" AFF	
B104A	MEN'S	CT	CT*	CTB	CTB1	CT	CT1	82" AFF	GB	CT/PS	CT1/P1	GB	CT/PS	CT1/P1	GB	CT/PS	CT1/P1	GB	CT/PS	CT1/P1	GB	PS	P1	10'-0" AFF	* SEE FLOOR PATTERN PLAN AB9.3
B104B	WOMEN'S	CT	CT*	CTB	CTB1	CT	CT1	82" AFF	GB	CT/PS	CT1/P1	GB	CT/PS	CT1/P1	GB	CT/PS	CT1/P1	GB	CT/PS	CT1/P1	GB	PS	P1	10'-0" AFF	* SEE FLOOR PATTERN PLAN AB9.3
B105	GYMNASIUM	SF	SF1	B					GB			GB			GB			GB			TM	--	--	VARIES	
B106	STORAGE	VCT	VCT2	B					GB	PE	P1	GB	PE	P1	GB	PE	P1	GB	PE	P1	OTS	--	--		
B107	STORAGE	VCT	VCT2	B					GB	PE	P1	GB	PE	P1	GB	PE	P1	GB	PE	P1	OTS	--	--		
B108	TEEN	RS	RS *	B					GB	PE	P1	GB	PE	P1	GB	PE	P1	GB	PE	P1	GB	PS	P1	VARIES	* SEE FLOOR PATTERN PLAN AB9.3, SEE RCP FOR CEILING HEIGHT
B109	MULTI-PURPOSE	C	C2	B					GB	PE	P1	GB	PE	P1	GB	PE	P1	GB	PE	P1	AC	FF	AC1	9'-6" AFF	
B110	MEETING / DANCE / MARTIAL ARTS / ACTIVITY ROOM	SF	SF1	B					GB	PE	P1	GB	PE	P1	GB	PE	P1	GB	PE	P1	AC	FF	AC1	9'-6" AFF	* SEE FLOOR PATTERN PLAN AB9.3
B111	STORAGE	VCT	VCT2	B					GB	PE	P1	GB	PE	P1	GB	PE	P1	GB	PE	P1	AC	FF	AC1	9'-6" AFF	
B112	OFFICE	C	C2	B					GB	PE	P1	GB	PE	P1	GB	PE	P1	GB	PE	P1	AC	FF	AC1	9'-6" AFF	
B113	CONCESSION	QT	QT1	QTB	QTB1				GB	PE	P1	GB	PE	P1	GB	PE	P1	GB	PE	P1	GB	PS	P1	9'-6" AFF	
B114	WARMING KITCHEN	QT	QT1	QTB	QTB1				GB			GB			GB			GB			AC	FF	AC1	9'-0" AFF	
B115A	BANQUET ROOM	C	C*	B					GB	PE	P1	GB	PE	P1	GB	PE	P1	GB	PE	P1	AC/GB	FF/PS	AC1/P2	VARIES	* SEE FLOOR PATTERN PLAN AB9.3, SEE RCP FOR CLNG. HT. AC-2 RFI #111
B115B	BANQUET ROOM	C	C*	B					GB	PE	P1	GB	PE	P1	GB	PE	P1	GB	PE	P1	AC/GB	FF/PS	AC1/P2	VARIES	* SEE FLOOR PATTERN PLAN AB9.3, SEE RCP FOR CLNG. HT. AC-2 RFI #111
B116	STORAGE	VCT	VCT2	B					GB	PE	P1	GB	PE	P1	GB	PE	P1	GB	PE	P1	OTS	--	--		
B117	PV EQUIP.	CONC	--	B					GB	PE	P1	GB	PE	P1	GB	PE	P1	GB	PE	P1	OTS	--	--		
B118	ELEC / DATA	CONC	--	B					GB	PE	P1	GB	PE	P1	GB	PE	P1	GB	PE	P1	OTS	--	--		
B119	PANTRY	QT	QT1	QTB	QTB1				GB	PE	P1	GB	PE	P1	GB	PE	P1	GB	PE	P1	GB	PS	P1	9'-0" AFF	
B120	CUSTODIAN	VCT	VCT2	B					GB	PS	P1	GB	PS	P1	GB	PS	P1	GB	PS	P1	GB	PS	P1	9'-0" AFF	
B121	STORAGE	VCT	VCT2	B					GB	PS	P1	GB	PS	P1	GB	PS	P1	GB	PS	P1	OTS	--	--		
B122	FIRE RISER	CONC	--	B					GB	PE	P1	GB	PE	P1	GB	PE	P1	GB	PE	P1	OTS	--	--		
B123	CORRIDOR	CF	CF*	B					GB	PE	P1	GB	PE	P1	GB	PE	P1	GB	PE	P1	GB	--	--	VARIES	
B124	CORRIDOR	CF	CF*	B					GB	PE	P1	GB	PE	P1	GB	PE	P1	GB	PE	P1	GB	--	--	VARIES	

DOOR TYPES

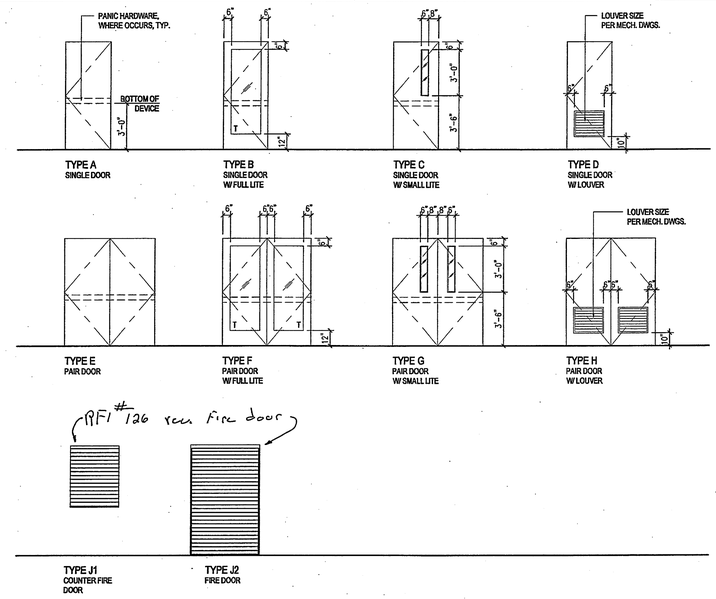

TYPE A SINGLE DOOR
TYPE B SINGLE DOOR W/ FULL LITE
TYPE C SINGLE DOOR W/ SMALL LITE
TYPE D SINGLE DOOR W/ LOUVER
TYPE E PAIR DOOR
TYPE F PAIR DOOR W/ FULL LITE
TYPE G PAIR DOOR W/ SMALL LITE
TYPE H PAIR DOOR W/ LOUVER
TYPE J1 COUNTER FIRE DOOR
TYPE J2 FIRE DOOR

DOOR FRAME TYPES

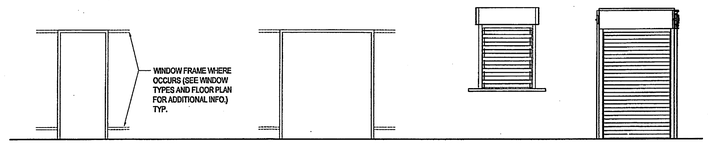

TYPE F1 TYPE F2 TYPE G1 TYPE G2

AS BUILT

WINDOW TYPES

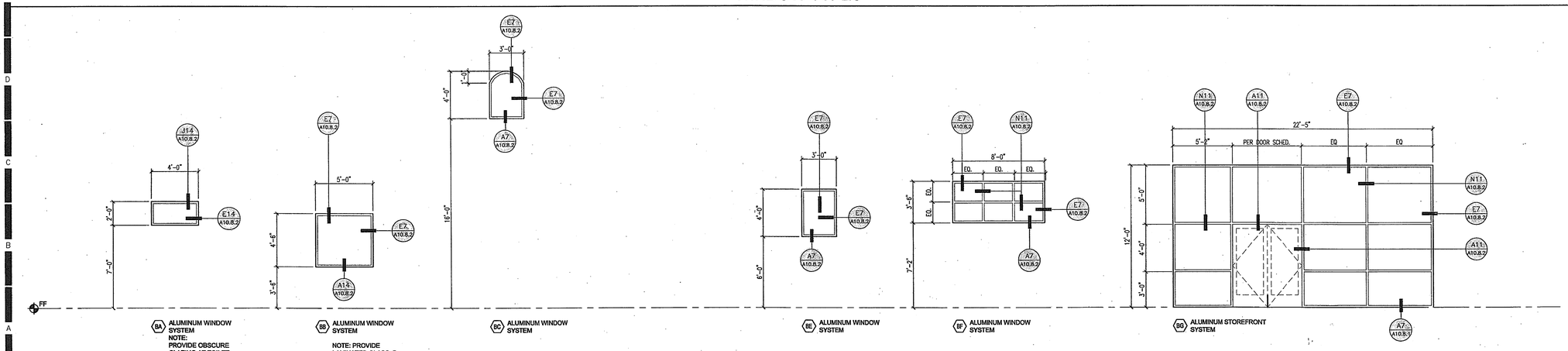

HMC ARCHITECTS
Architecture Interiors Planning
3546 CONCOURS STREET
ONTARIO, CALIFORNIA 91764
Telephone: 909 . 989 . 9979
Fax: 909 . 483 . 1400
www. hmcarchitects .com

FINISH SCHEDULE ABBREVIATIONS

AC	ACOUSTICAL CEILING TILE	QT	QUARRY TILE
B	4" TOP SET BASE	QTB	QUARRY TILE BASE
C	CARPET	TM	ACOUSTICAL CEILING TREATMENT (TECTUM)
CONC	SEALED CONCRETE		
CT	CERAMIC TILE	FF	FACTORY FINISH
EP	EXTERIOR PAINT	PE	PAINT-EGGSHELL FINISH
GB	GYPSUM BOARD	PS	PAINT-SEMI-GLOSSS FINISH
O.T.S.	OPEN TO STRUCTURE		
P	PAINT		
PR	PLASTER		

FINISH SCHEDULE NOTES

1. REFER TO 09050 FOR COLOR FINISH SPECIFICATIONS.
2. INTERIOR PAINT LOCATIONS TO BE SITE VERIFIED BY DESIGNER/ARCHITECT PRIOR TO PAINTING.
3. REFER TO SHEETS A9.3 AND A9.4 FOR FLOOR PATTERNS AND ACCENT PAINT/TILE COLOR LOCATIONS.
4. ALL EXPOSED DUCTWORK & STRUCTURAL ELEMENTS TO BE PRIMED & PAINTED.

DOOR SCHEDULE ABBREVIATIONS

AL	ALUMINUM	P	FIELD PAINT
BA	BRONZE ANODIZED	PC	PARTICLE BOARD CORE - WOOD
CG	CLEAR GLASS	PH	PANIC HARDWARE
HM	HOLLOW METAL		
HV	HARDWOOD VENEER FINISH		
MC	MINERAL CORE -WOOD		

DOOR SCHEDULE NOTES

1. THE LETTERS "PR" PRECEDING "DOOR SIZE" IN THE INDICATED DOOR SCHEDULE DIMENSIONS THE OVERALL WIDTH OF A PAIR OF DOORS. INDIVIDUAL DOOR LEAVES ARE TO BE EQUAL IN SIZE, UNLESS NOTED OTHERWISE.
2. DOORS SHALL BE 1 3/4" THICK U.N.O. OR SPECIFIED.
3. FIRE RATED DOOR ASSEMBLIES SHALL HAVE U.L. LABELED WIRE GLASS, BE POSITIVE LATCHING, AND BE SELF CLOSING, OR ACTIVATED BY SMOKE DETECTORS PER CBC 713.
4. GLAZING IN ALL FIRE RATED ASSEMBLIES SHALL BE U.L. LISTED 1/4" THICK WIRE GLASS INSTALLED IN STEEL FRAMES, U.N.O.
5. ALL DOORS W/O PANIC HARDWARE SHALL HAVE LEVER HARDWARE.
6. EXIT DOORS SHALL BE OPENABLE FROM THE INSIDE WITHOUT ANY USE OF A KEY ANY SPECIAL KNOWLEDGE OR FORCE.
7. CONTRACTOR IS TO FIELD MEASURE ALL OPENINGS PRIOR TO FABRICATION.
8. REFER TO SPECIFICATIONS AND SHEET A10.4 FOR SIGNAGE FABRICATION.
9. PROVIDE TEMPERED GLASS AT ALL DOOR LOCATIONS, U.N.O. (PER CBC 2406)
10. MAXIMUM EFFORT TO OPERATE DOOR SHALL NOT EXCEED THE FOLLOWING:
    A. INTERIOR DOORS: 5 POUNDS
    B. EXTERIOR DOORS: 8 POUNDS
    C. FIRE DOORS: 15 POUNDS (PER CBC 1133.B.2.5)
11. REFER TO MECHANICAL DRAWINGS FOR REQUIRED DOOR UNDERCUTS.

WINDOW SCHEDULE NOTES

1. WINDOW SCHEDULE DIMENSIONS INDICATE FRAME DIMENSIONS. CONTRACTOR SHALL FIELD VERIFY AND MEASURE ALL OPENINGS PRIOR TO FABRICATION.
2. PROVIDE 1/4" TEMPERED GLASS AT ALL INTERIOR WINDOW LOCATIONS, U.N.O.
3. PROVIDE 1" INSULATED GLASS AT ALL EXTERIOR WINDOW LOCATIONS, U.N.O.
4. PROVIDE TEMPERED GLASS AT ALL WINDOW/STOREFRONT LOCATIONS, U.N.O. (PER CBC 2406)

Key Plan

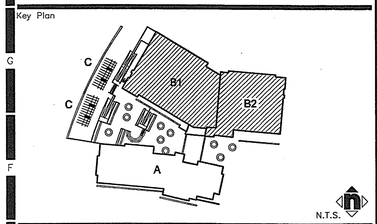

Consultant's Seal

Agency Approval

Project Title

CITY OF RIVERSIDE

ORANGE TERRACE LIBRARY / COMMUNITY CENTER
PLAN CHECK NO. 07-1397

20010 ORANGE TERRACE PARKWAY
RIVERSIDE, CA 92508

SM HMC ARCHITECTS

No.	Revisions/Submissions	Date:
	Design Development Submittal	12/18/06
	Building Department Submittal	03/29/07
1	Building Department Resubmittal	05/22/07
2	Building Department Resubmittal / QA QC Review	06/22/07

Drawing Title

BUILDING "B" - FINISH, DOOR & WIN. SCHEDULES

Architect's Seal

LICENSED ARCHITECT CHRISTOPHER RICHARD AYLWARD NO. C-19759 REN. 02-24-09 STATE OF CALIFORNIA

Designed: SS	Project No. 2340001
Drawn: XL/MM	Scale: AS NOTED
Checked: LP	Drawing No. AB9.1
Reviewed: RS	
Date: 06-22-07	Sheet 01 of 11

WINDOW TYPES

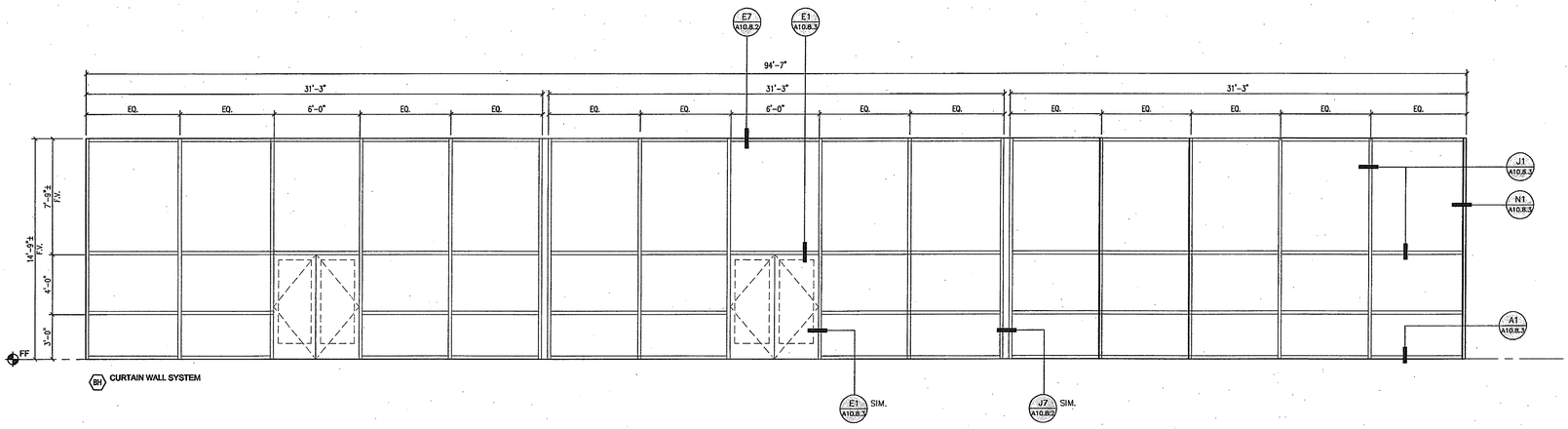

BH CURTAIN WALL SYSTEM

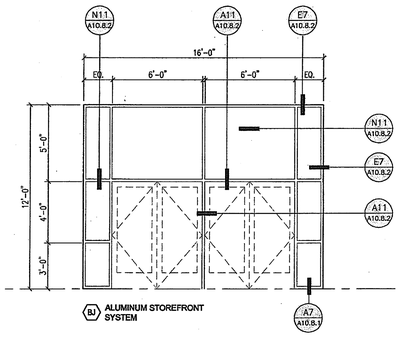

BJ ALUMINUM STOREFRONT SYSTEM

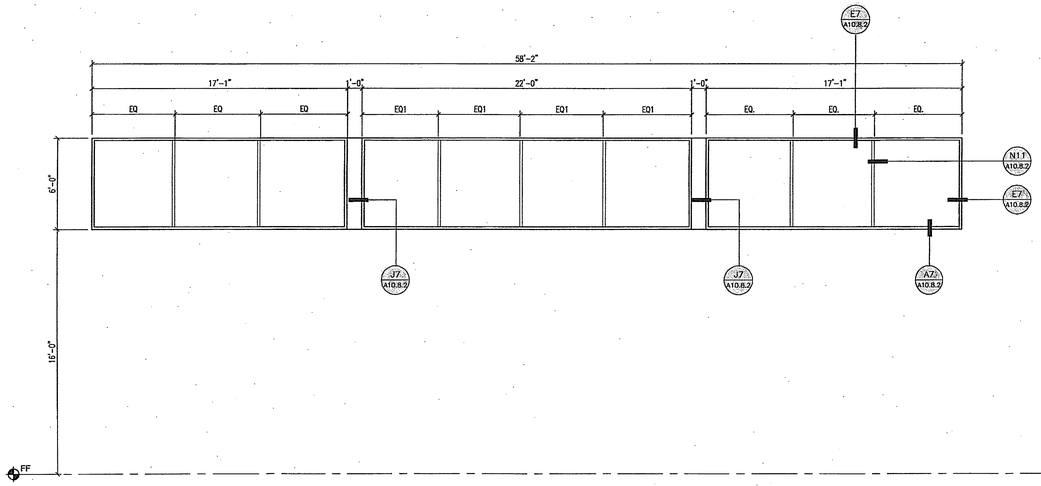

BK ALUMINUM WINDOW SYSTEM

BKO ALUMINUM WINDOW SYSTEM

BK ALUMINUM WINDOW SYSTEM

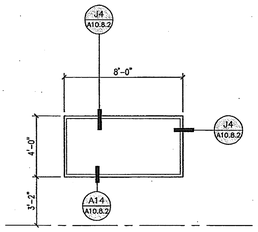

BL HOLLOW METAL WINDOW FRAMES INTERIOR

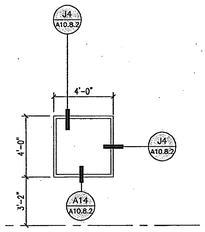

BM HOLLOW METAL WINDOW FRAMES INTERIOR

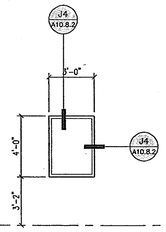

BN HOLLOW METAL WINDOW FRAMES INTERIOR

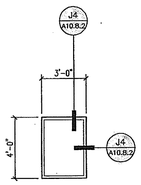

BP HOLLOW METAL WINDOW FRAMES INTERIOR

NOTE: PROVIDE LAMINATED GLASS AT GYMNASIUM WINDOWS

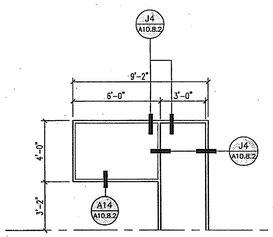

BQ HOLLOW METAL WINDOW FRAMES INTERIOR

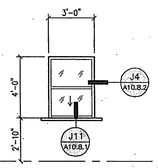

BR HOLLOW METAL WINDOW FRAMES INTERIOR

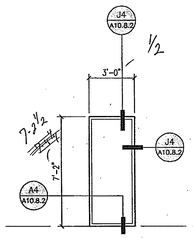

BS HOLLOW METAL WINDOW FRAMES INTERIOR

NOTE: PROVIDE LAMINATED GLASS AT GYMNASIUM WINDOWS

AS BUILT

HMC ARCHITECTS
Architecture Interiors Planning
3546 CONCOURS STREET
ONTARIO, CALIFORNIA 91764
Telephone: 909 . 989 . 9979
Fax: 909 . 483 . 1400
www. hmcarchitects .com

FINISH SCHEDULE ABBREVIATIONS

AC	ACOUSTICAL CEILING TILE	QT	QUARRY TILE
B	4" TOP SET BASE	QTB	QUARRY TILE BASE
C	CARPET	TM	ACOUSTICAL CEILING TREATMENT (TECTUM)
CONC	SEALED CONCRETE		
CT	CERAMIC TILE	FF	FACTORY FINISH
EP	EXTERIOR PAINT	PE	PAINT-EGGSHELL FINISH
GB	GYPSUM BOARD	PS	PAINT-SEMI-GLOSSS FINISH
O.T.S.	OPEN TO STRUCTURE		
P	PAINT		
PR	PLASTER		

FINISH SCHEDULE NOTES

1. REFER TO 09050 FOR COLOR FINISH SPECIFICATIONS.
2. INTERIOR PAINT LOCATIONS TO BE SITE VERIFIED BY DESIGNER/ARCHITECT PRIOR TO PAINTING.
3. REFER TO SHEETS A9.3 AND A9.4 FOR FLOOR PATTERNS AND ACCENT PAINT/TILE COLOR LOCATIONS.
4. ALL EXPOSED DUCTWORK & STRUCTURAL ELEMENTS TO BE PRIMED & PAINTED.

DOOR SCHEDULE ABBREVIATIONS

AL	ALUMINUM	P	FIELD PAINT
BA	BRONZE ANODIZED	PC	PARTICLE BOARD CORE - WOOD
CG	CLEAR GLASS	PH	PANIC HARDWARE
HM	HOLLOW METAL		
HV	HARDWOOD VENEER FINISH		
MC	MINERAL CORE -WOOD		

DOOR SCHEDULE NOTES

1. THE LETTERS "PR" PRECEDING "DOOR SIZE" IN THE INDICATED DOOR SCHEDULE DIMENSIONS THE OVERALL WIDTH OF A PAIR OF DOORS. INDIVIDUAL DOOR LEAVES ARE TO BE EQUAL IN SIZE, UNLESS NOTED OTHERWISE.
2. DOORS SHALL BE 1 3/4" THICK U.N.O. OR SPECIFIED.
3. FIRE RATED DOOR ASSEMBLIES SHALL HAVE U.L. LABELED WIRE GLASS, BE POSITIVE LATCHING, AND BE SELF CLOSING, OR ACTIVATED BY SMOKE DETECTORS PER CBC 713.
4. GLAZING IN ALL FIRE RATED ASSEMBLIES SHALL BE U.L. LISTED 1/4" THICK WIRE GLASS INSTALLED IN STEEL FRAMES, U.N.O.
5. ALL DOORS W/O PANIC HARDWARE SHALL HAVE LEVER HARDWARE.
6. EXIT DOORS SHALL BE OPENABLE FROM THE INSIDE WITHOUT ANY USE OF A KEY ANY SPECIAL KNOWLEDGE OR FORCE.
7. CONTRACTOR IS TO FIELD MEASURE ALL OPENINGS PRIOR TO FABRICATION.
8. REFER TO SPECIFICATIONS AND SHEET A10.4 FOR SIGNAGE FABRICATION.
9. PROVIDE TEMPERED GLASS AT ALL DOOR LOCATIONS, U.N.O. (PER CBC 2406)
10. MAXIMUM EFFORT TO OPERATE DOOR SHALL NOT EXCEED THE FOLLOWING:
    A. INTERIOR DOORS: 5 POUNDS
    B. EXTERIOR DOORS: 5 POUNDS
    C. FIRE DOORS: 15 POUNDS (PER CBC 1133.B.2.5)
11. REFER TO MECHANICAL DRAWINGS FOR REQUIRED DOOR UNDERCUTS.

WINDOW SCHEDULE NOTES

1. WINDOW SCHEDULE DIMENSIONS INDICATE FRAME DIMENSIONS. CONTRACTOR SHALL FIELD VERIFY AND MEASURE ALL OPENINGS PRIOR TO FABRICATION.
2. PROVIDE 1/4" TEMPERED GLASS AT ALL INTERIOR WINDOW LOCATIONS, U.N.O.
3. PROVIDE 1" INSULATED GLASS AT ALL EXTERIOR WINDOW LOCATIONS. U.N.O.
4. PROVIDE TEMPERED GLASS AT ALL WINDOW/STOREFRONT LOCATIONS, U.N.O. (PER CBC 2406)

Key Plan

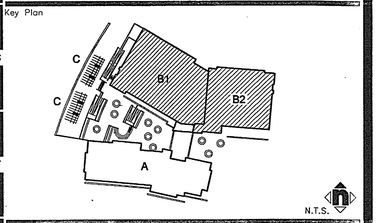

Consultant's Seal

Agency Approval

Project Title

ORANGE TERRACE LIBRARY / COMMUNITY CENTER
PLAN CHECK NO. 07-1397

20010 ORANGE TERRACE PARKWAY
RIVERSIDE, CA 92508

HMC ARCHITECTS

No.	Revisions/Submissions	Date:
	Design Development Submittal	12/18/06
	Building Department Submittal	03/29/07
1	Building Department Resubmittal	05/22/07
2	Building Department Resubmittal / OA QC Review	06/22/07

Drawing Title
BUILDING "B" WINDOW SCHEDULE

Architect's Seal

LICENSED ARCHITECT
CHRISTOPHER PAUL MILLER
NO. C-19159
REN. 02-24-09
STATE OF CALIFORNIA

Designed: SS	Project No. 2340001
Drawn: XL/MM	Scale: AS NOTED
Checked: LP	Drawing No.
Reviewed: RS	AB9.2
Date: 06-22-07	Sheet of ##

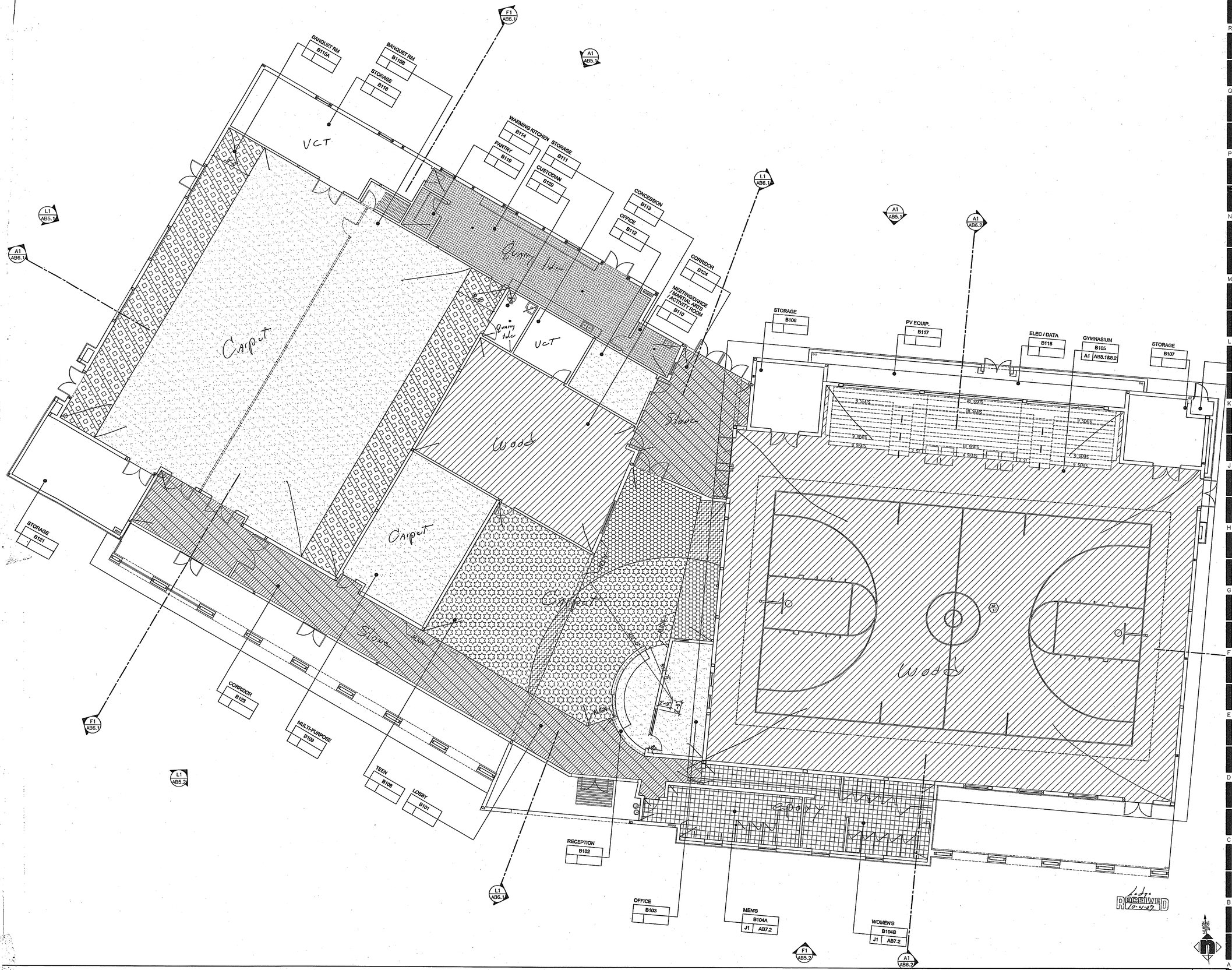

BUILDING 'B' FLOOR PATTERN PLAN | A1 | 1/8" = 1'-0"

Name: \\ONT-E2\projects\Projects\2340 City of Riverside – Diffenbaugh\001-000\18-CAD\Sheets\AB9.3 BUILDING B FLOOR PATTERN PLAN.dwg Oct 02,2007-2:31pm

HMC ARCHITECTS
Architecture Interiors Planning
3546 CONCOURS STREET
ONTARIO, CALIFORNIA 91764
Telephone: 909 . 989 . 9979
Fax: 909 . 483 . 1400
www. hmcarchitects .com

INTERIOR FINISH LEGEND

- C1 Field
- C2 Orange
- C3 Brown
- C4 Dk. Blue
- CF1 Grey
- CT3 - FIELD
- CT4 - REFER TO ENLARGED TOILET PLANS FOR PATTERNS
- RS1 Dk. Grey
- SV2 Blue Grey
- SV3 Gold
- SF1
- VCT1 Beige
- VCT2 Grey
- QT1

P# PAINT ACCENT COLOR

CT# ACCENT TILE COLOR

NOTE:

1. REFER TO 09050 / 09 06 00 FOR COLOR FINISH CODE
2. INTERIOR PAINT LOCATIONS TO BE SITE VERIFIED BY DESIGNER PRIOR TO PAINTING.
3. ROOMS WITHOUT PATTERNS REFER TO INTERIOR FINISH SCHEDULE

AS BUILT

Key Plan

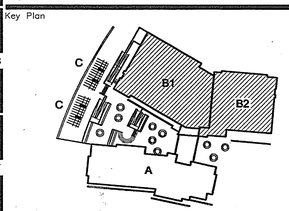

N.T.S.

Consultant's Seal

Agency Approval

Project Title

ORANGE TERRACE LIBRARY / COMMUNITY CENTER

PLAN CHECK NO. 07-1397

20010 ORANGE TERRACE PARKWAY
RIVERSIDE, CA 92508

HMC ARCHITECTS

No.	Revisions/Submissions	Date:
	Design Development Submittal	12/18/06
	Building Department Submittal	03/29/07
1	Building Department Resubmittal	05/22/07
2	Building Department Resubmittal / QA QC Review	06/22/07

Drawing Title

BUILDING 'B' FLOOR PATTERN PLAN

Architect's Seal: LICENSED ARCHITECT CHRISTOPHER RICHARD TAYLOR NO. C-19759 REN. 02-24-08 STATE OF CALIFORNIA

Designed: SS/JL	Project No. 2340001
Drawn: JL	Scale: AS NOTED
Checked: LP	Drawing No.
Reviewed: RS	AB9.3
Date: 06-22-07	Sheet 01 of ##

PLEASE RECYCLE AB9.3 BUILDING B FLOOR PATTERN PLAN.DWG