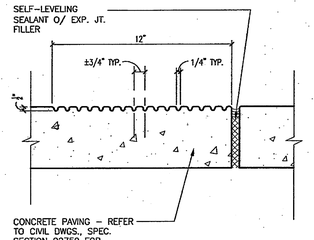

02770-16.DWG

CONCRETE GROOVING DETAIL — N14

3" = 1'-0"

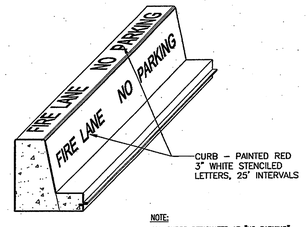

NOTE:
ALL CURBS DESIGNATED AS "NO PARKING" SHALL BE PAINTED BY ACCEPTABLE RED PAINT AS PREAPPROVED BY CITY OF RIVERSIDE FIRE DEPARTMENT.

02770-19.DWG

FIRE LANE CURB PAINTING — N11

3/4" = 1'-0"

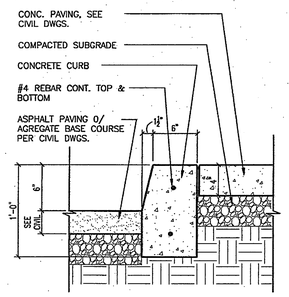

02770-12.DWG

CONC. CURB DETAIL — N7

1 1/2" = 1'-0"

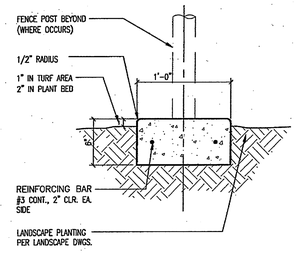

02770-06.DWG

MOW STRIP DETAIL — N4

1 1/2" = 1'-0"

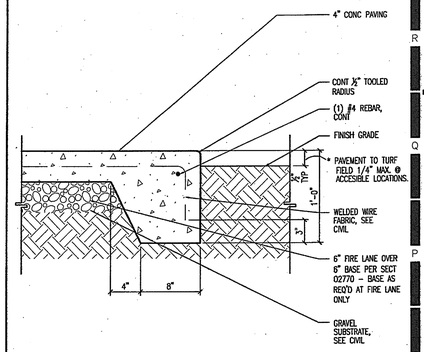

02770-4.DWG

EDGE OF CONC. PAVING — N1

1 1/2" = 1'-0"

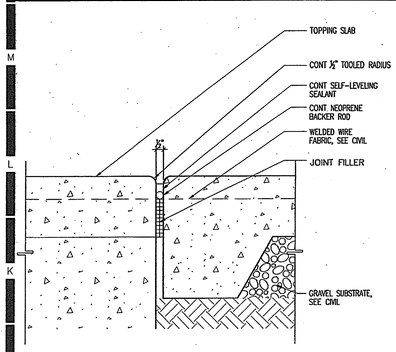

02770-07.DWG

CONC. PAVING EXPANSION JOINT — J14

3" = 1'-0"

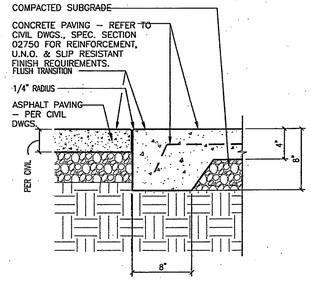

02770-43.DWG

ASPHALT AT CONCRETE PAVING — J11

3" = 1'-0"

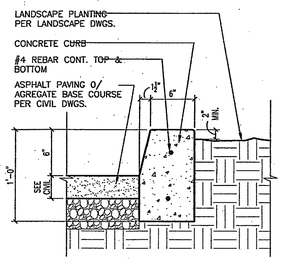

02770-17.DWG

CONCRETE CURB DETAIL — J7

1 1/2" = 1'-0"

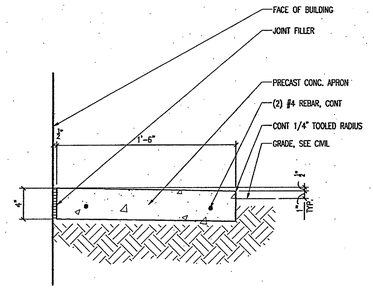

02770-13.DWG

CONCRETE APRON — J4

1 1/2" = 1'-0"

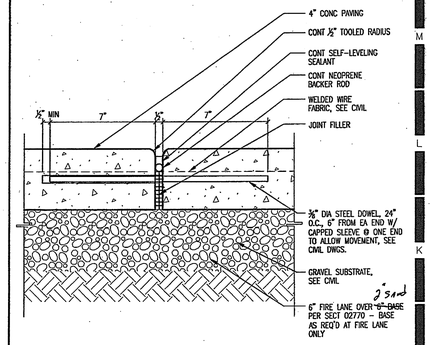

02770-03.DWG

CONC. PAVING EXPANSION JOINT — J1

3" = 1'-0"

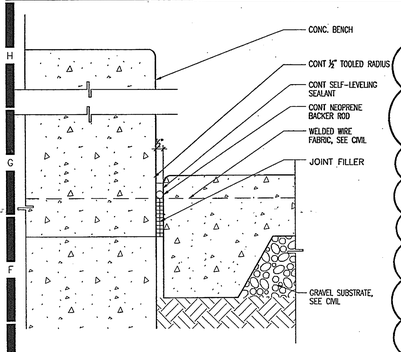

02770-28.DWG

CONC. EXPANSION JOINT @ BENCH — E14

3" = 1'-0"

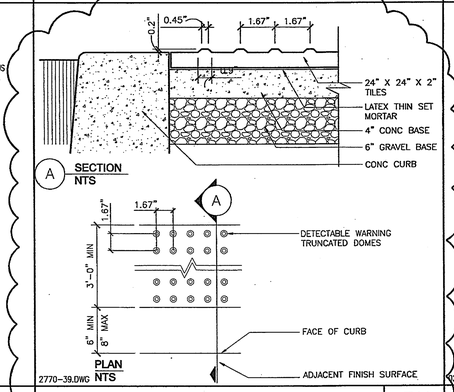

2770-39.DWG

TRUNCATED DOME PAVERS — E11

N.T.S.

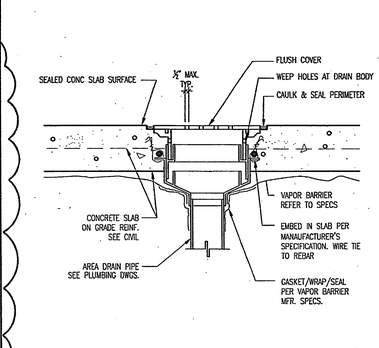

2510-01.DWG

AREA DRAIN AT CONC. SLAB — E7

1" = 1'-0"

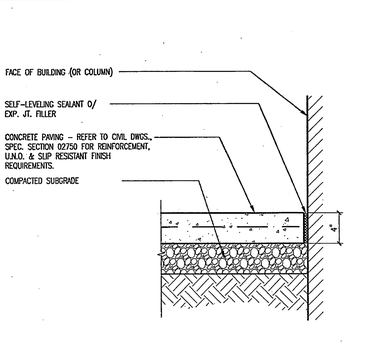

02770-05.DWG

CONC. PAVING AT BUILDING — E4

1 1/2" = 1'-0"

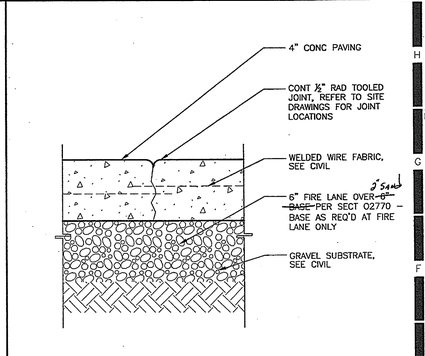

02770-02.DWG

CONC. PAVING CONTROL JOINT — E1

3" = 1'-0"

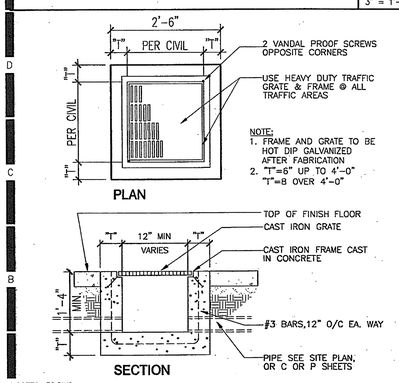

NOTE:
1. FRAME AND GRATE TO BE HOT DIP GALVANIZED AFTER FABRICATION
2. "T"=6" UP TO 4'-0"
"T"=8 OVER 4'-0"

02770-38.DWG

CATCH BASIN — A14

3/4" = 1'-0"

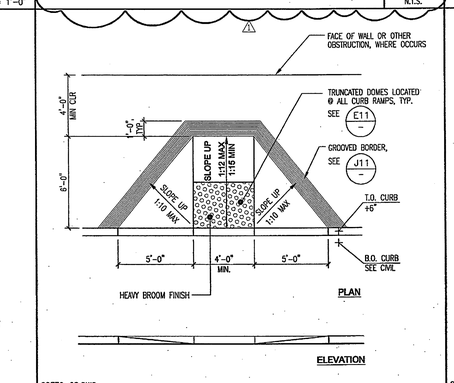

02770-08.DWG

CURB RAMP — A11

1/4" = 1'-0"

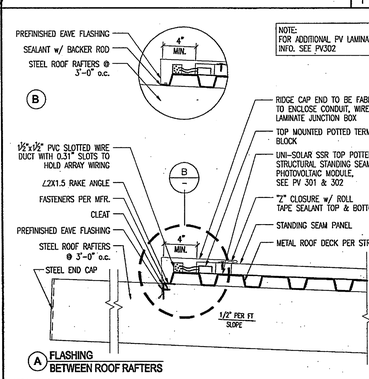

02770-30.DWG

LUNCH SHELTER CANOPY TOP EDGE — A7

1 1/2" = 1'-0"

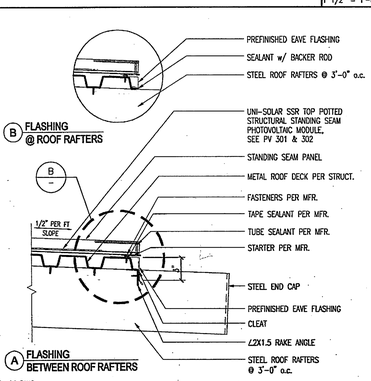

02770-29.DWG

LUNCH SHELTER CANOPY @ LOWER EDGE — A4

1 1/2" = 1'-0"

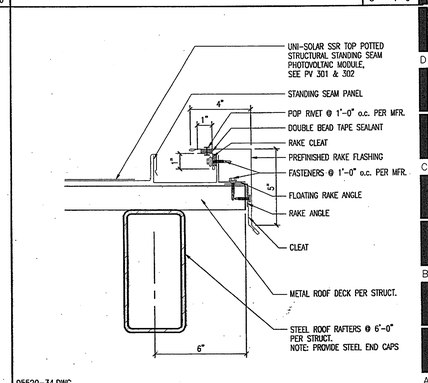

05520-34.DWG

LUNCH SHELTER CANOPY EDGE - OFF MODULE — A1

3" = 1'-0"

HMC ARCHITECTS
Architecture Interiors Planning
3546 CONCOURS STREET
ONTARIO, CALIFORNIA 91764
Telephone: 909 . 989 . 9979
Fax: 909 . 483 . 1400
www. hmcarchitects .com

AS BUILT

Key Plan

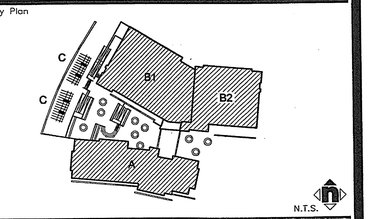

Consultant's Seal

Agency Approval

Project Title

CITY OF RIVERSIDE

ORANGE TERRACE LIBRARY / COMMUNITY CENTER
PLAN CHECK NO. 07-1397
20010 ORANGE TERRACE PARKWAY
RIVERSIDE, CA 92508

SM HMC ARCHITECTS

No.	Revisions/Submissions	Date:
	Design Development Submittal	12/18/06
	Building Department Submittal	03/29/07
1	Building Department Resubmittal	05/22/07
2	Building Department Resubmittal / QA QC Review	06/22/07

Drawing Title

SITE DETAILS

Architect's Seal

LICENSED ARCHITECT RICHARD L. TAYLOR LICENSE NO. C-19759 REN. 02-24-09 STATE OF CALIFORNIA

Designed: SS	Project No. 2340001
Drawn: XL	Scale: AS NOTED
Checked: LP	Drawing No.
Reviewed: RS	A10.2.1
Date: 06-22-07	Sheet 01 of #

File Name: N:\2005 Jobs\2340 City of Riverside – Diffenbaugh\001-000\18-CAD\Sheets\A10.2.1 SITE DETAILS.dwg Jun 21,2007-12:53pm

PLEASE RECYCLE A10.2.1 SITE DETAILS.DWG

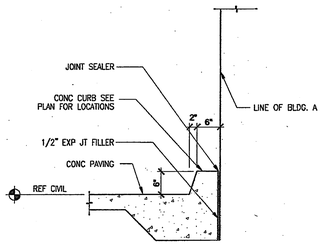

N14

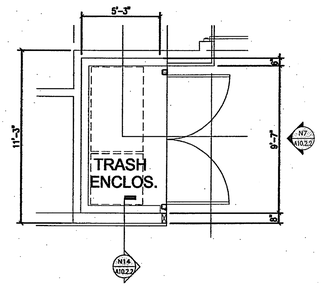

05520-36.DWG

TRASH ENCLOSURE — N11 — 1/4" = 1'-0"

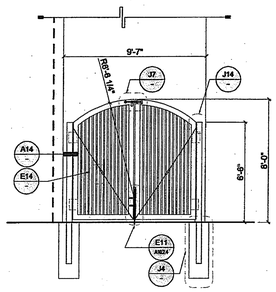

05520-29.DWG

TRASH ENCLOSURE GATE — N7 — 1/4" = 1'-0"

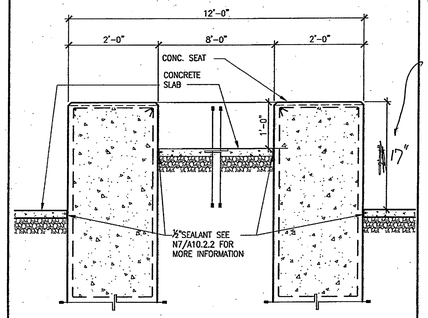

N4

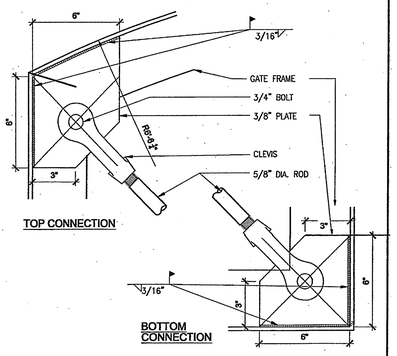

J05520-31.DWG

CLEVIS DETAIL — J14 — 3" = 1'-0"

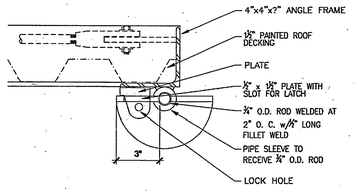

05520-31.DWG

CLEVIS DETAIL — J11 — 3" = 1'-0"

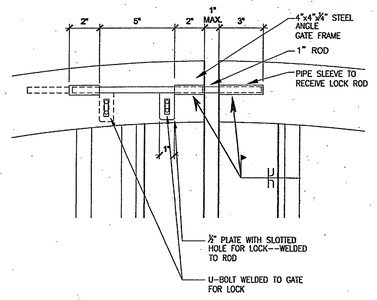

05520-33.DWG

GATE LATCH ELEVATION — J7 — 3" = 1'-0"

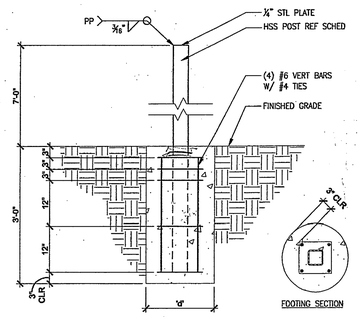

05520-28.DWG

STEEL COLUMN AT METAL GATES/FENCE — J4 — 3/4" = 1'-0"

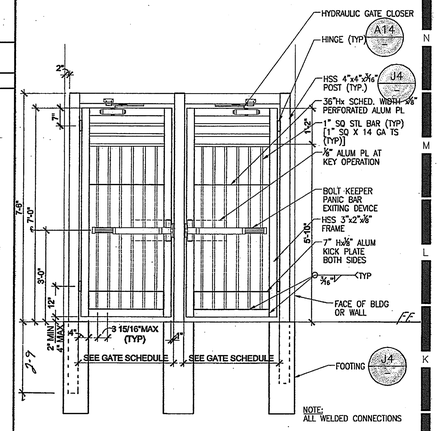

05520-26A.DWG

ORNAMENTAL FENCE GATE — J1 — 1/2" = 1'-0"

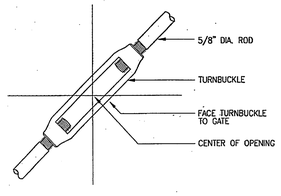

E05520-30.DWG

TENSION ROD TURNBUCKLE — E14 — 3" = 1'-0"

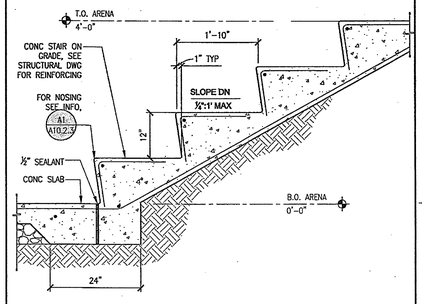

03300-03.DWG

CONC. ARENA — E11 — 3/4" = 1'-0"

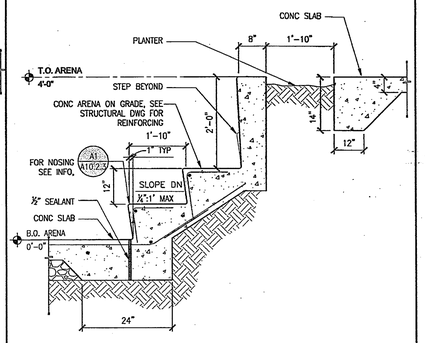

E7

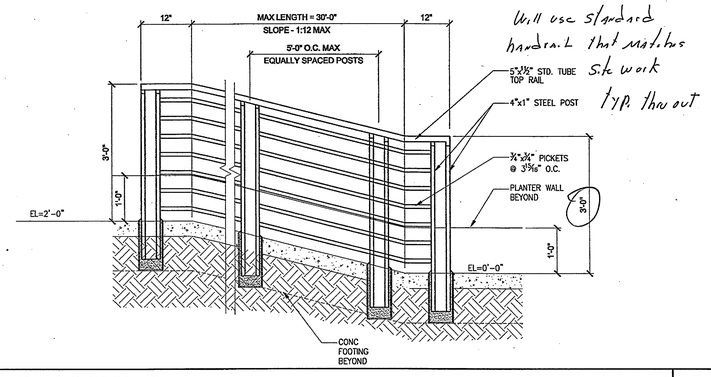

Will use standard handrail that matches site work typ. thru out

05500-06.DWG

HANDRAIL / RAILING AT RAMP — E1 — 3/4" = 1'-0"

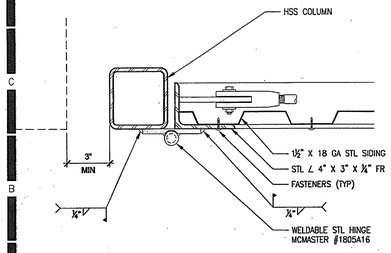

A05520-27.DWG

HINGE AT METAL GATE (VERTICAL SIDING) — A14 — 3" = 1'-0"

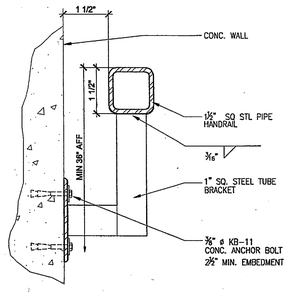

05520-35.DWG

WALL MOUNTED SQ. HANDRAIL — A11 — 1/2" = 1'-0"

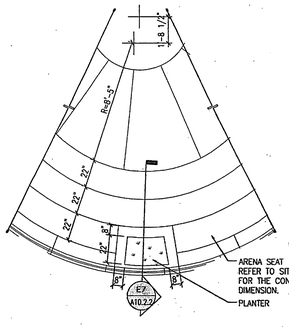

02770-31.DWG

TREE WELL — A7 — 1/4" = 1'-0"

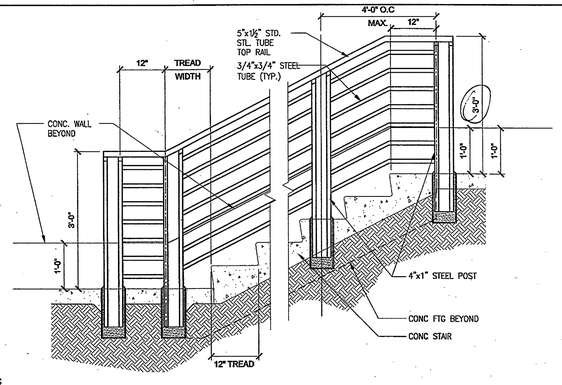

05500-05.DWG

HANDRAIL / RAILING AT STAIR — A1 — 3/4" = 1'-0"

HMC ARCHITECTS
Architecture Interiors Planning
3546 CONCOURS STREET
ONTARIO, CALIFORNIA 91764
Telephone: 909 . 989 . 9979
Fax: 909 . 483 . 1400
www. hmcarchitects .com

AS BUILT

Key Plan

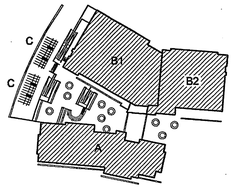

Consultant's Seal

Agency Approval

Project Title

CITY OF RIVERSIDE

ORANGE TERRACE LIBRARY / COMMUNITY CENTER

PLAN CHECK NO. 07-1397

20010 ORANGE TERRACE PARKWAY
RIVERSIDE, CA 92508

HMC ARCHITECTS

No.	Revisions/Submissions	Date:
	Design Development Submittal	12/18/06
	Building Department Submittal	03/29/07
1	Building Department Resubmittal	05/22/07
2	Building Department Resubmittal / QA QC Review	06/22/07

Drawing Title

SITE DETAILS

Architect's Seal

LICENSED ARCHITECT — CHRISTOPHER PACHECO LAYTON — LICENSE NO. C-19759 — REN. 02-24-09 — STATE OF CALIFORNIA

Designed: SS	Project No. 2340001
Drawn: LT	Scale: AS NOTED
Checked: LP	Drawing No.
Reviewed: RS	A10.2.2
Date: 08-22-07	Sheet 01 of ##

File Name: N:\2005 Jobs\2340 City of Riverside - Diffenbaugh\001-000\18-CAD\Sheets\A10.2.2 SITE DETAILS.dwg Jun 21,2007-12:53pm

PLEASE RECYCLE A10.2.2 SITE DETAILS.DWG

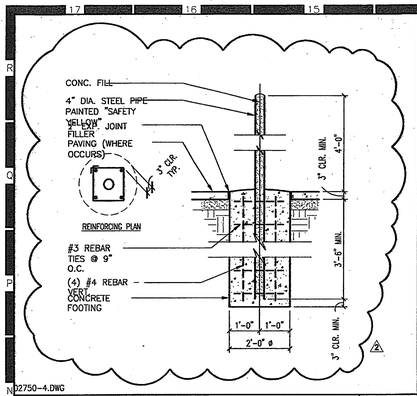

02750-4.DWG

PIPE BOLLARD — N14

1/2" = 1'-0"

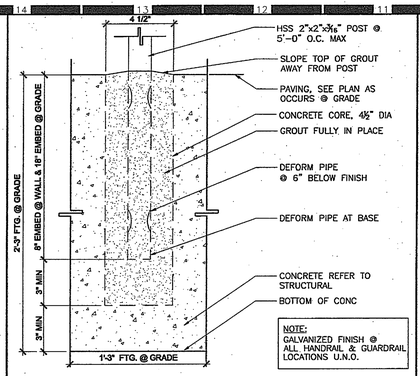

02770-01.DWG

POST EMBED — N11

3" = 1'-0"

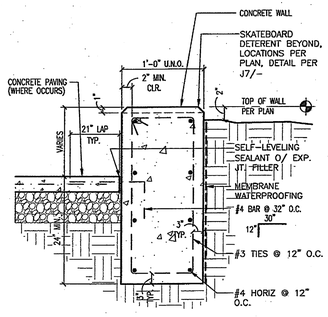

02770-18.DWG

PLANTER WALL DETAIL — N7

1 1/2" = 1'-0"

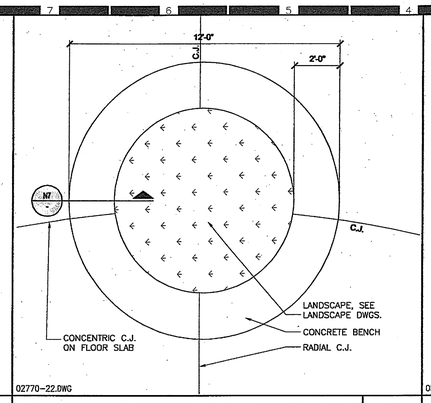

02770-22.DWG

RAISED ON FLOOR SLAB PLANTER/SEAT — N4

3/8" = 1'-0"

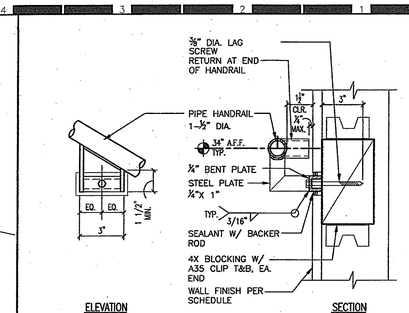

05500-21.DWG

HANDRAIL ATTACHMENT — N1

3" = 1'-0"

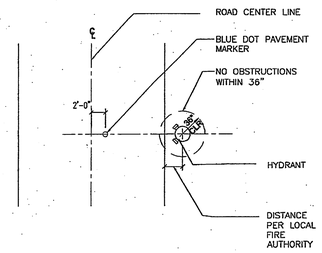

02750-03.DWG

HYDRANT LOCATOR: BLUE DOT — J14

1/8" = 1'-0"

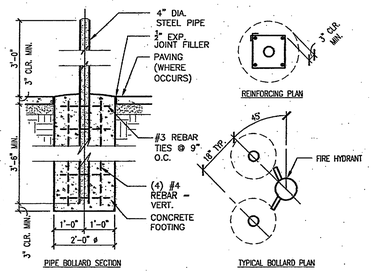

02750-1.DWG

FIRE HYDRANT BOLLARD DETAIL — J11

1/2" = 1'-0"

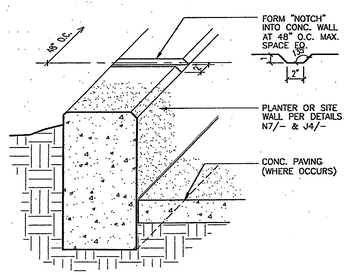

02770-20.DWG

SKATEBOARD DETERRENT — J7

3/4" = 1'-0"

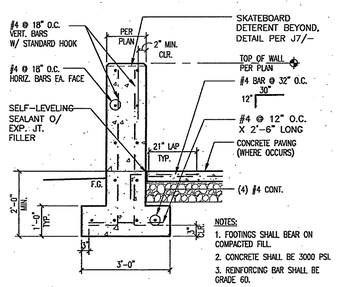

02770-21.DWG

RETAINING WALL DETAIL — J4

1/2" = 1'-0"

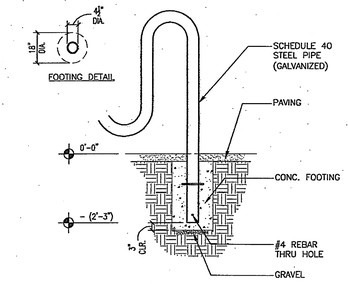

05500-01.DWG

BIKE RACK — J1

1/2" = 1'-0"

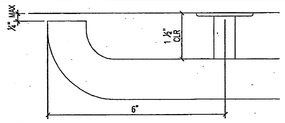

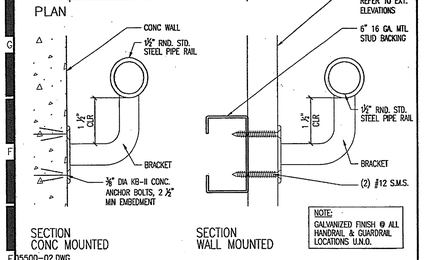

05500-02.DWG

WALL MOUNTED HANDRAIL — E14

HALF

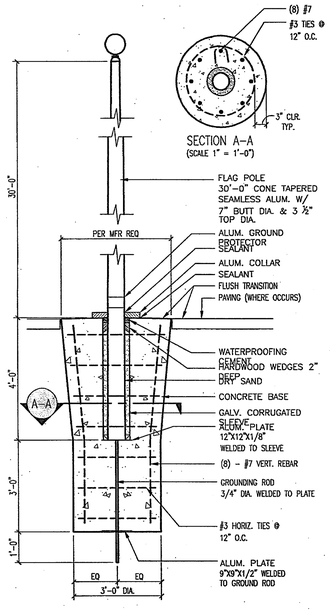

10400-06.DWG

ALUMINUM FLAG POLE — A11

1/2" = 1'-0"

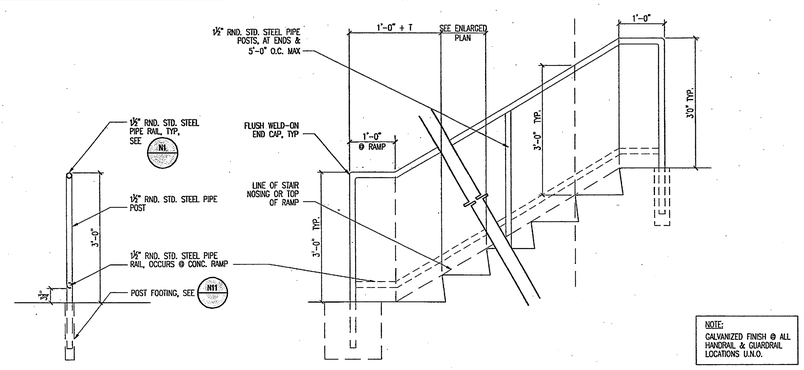

05500-04.DWG

HANDRAIL — E4

3/4" = 1'-0"

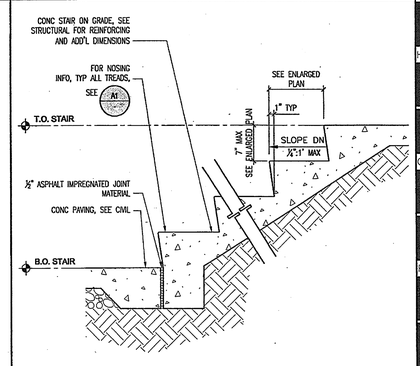

03300-02.DWG

CONC. STAIR — E1

3/4" = 1'-0"

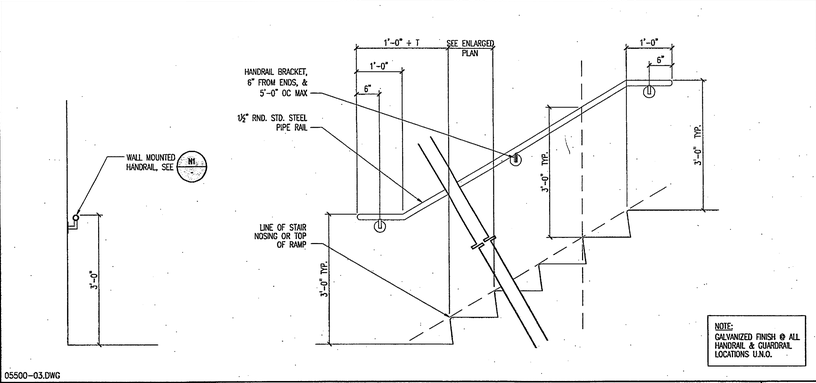

05500-03.DWG

HANDRAIL — A4

3/4" = 1'-0"

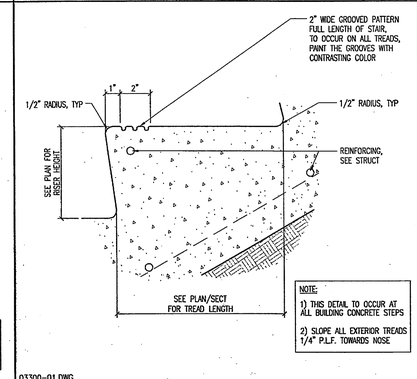

03300-01.DWG

CONC. STAIR NOSING — A1

3" = 1'-0"

HMC ARCHITECTS
Architecture Interiors Planning
3546 CONCOURS STREET
ONTARIO, CALIFORNIA 91764
Telephone: 909 . 989 . 9979
Fax: 909 . 483 . 1400
www. hmcarchitects .com

AS BUILT

Key Plan

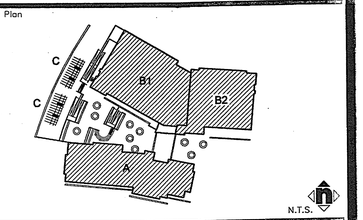

Consultant's Seal

Agency Approval

Project Title

CITY OF RIVERSIDE

ORANGE TERRACE LIBRARY / COMMUNITY CENTER

PLAN CHECK NO. 07-1397

20010 ORANGE TERRACE PARKWAY
RIVERSIDE, CA 92508

SMHMC ARCHITECTS

No.	Revisions/Submissions	Date:
	Design Development Submittal	12/18/06
	Building Department Submittal	03/29/07
1	Building Department Resubmittal	05/22/07
2	Building Department Resubmittal / OA QC Review	06/22/07

Drawing Title

SITE DETAILS

Architect's Seal

LICENSED ARCHITECT CONSTANCE RICHARD TAYLOR NO. C-17750 REN. 02-24-08 STATE OF CALIFORNIA

Designed: SS	Project No. 2340001
Drawn: XL	Scale: AS NOTED
Checked: LP	Drawing No.
Reviewed: RS	A10.2.3
Date: 06-22-07	Sheet of ##

File Name: N:\2005 Jobs\2340 City of Riverside – Diffenbaugh\001-000\18-CAD\Sheets\A10.2.3 SITE STAIR & RAILING DETAILS.dwg Jun 21,2007-12:52pm

PLEASE RECYCLE A10.2.3 SITE STAIR & RAILING DETAILS.DWG

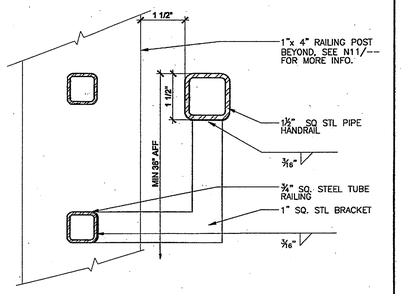

05520-11.DWG

GUARDRAIL W/HANDRAIL — N14

3" = 1'-0"

Will use standard hand rail thru out

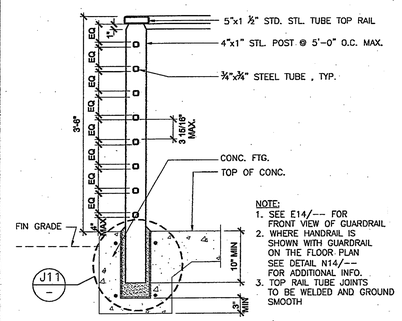

NOTE:
1. SEE E14/-- FOR FRONT VIEW OF GUARDRAIL
2. WHERE HANDRAIL IS SHOWN WITH GUARDRAIL ON THE FLOOR PLAN SEE DETAIL N14/-- FOR ADDITIONAL INFO.
3. TOP RAIL TUBE JOINTS TO BE WELDED AND GROUND SMOOTH

05520-10.DWG

GUARDRAIL — N11

1" = 1'-0"

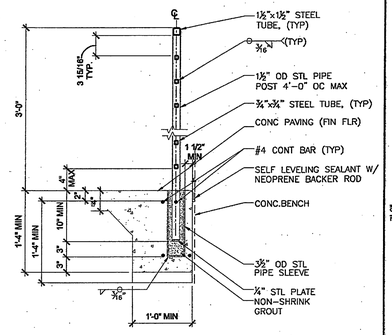

05520-37.DWG

RAILING @ CONC. BENCH — N7

1" = 1'-0"

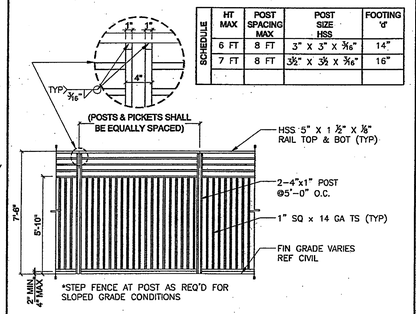

SCHEDULE	HT MAX	POST SPACING MAX	POST SIZE HSS	FOOTING 'd'
	6 FT	8 FT	3" X 3" X ⅜"	14"
	7 FT	8 FT	3½" X 3½ X ⅜"	16"

05520-08A.DWG

ORNAMENTAL PICKET FENCE — N4

1/4" = 1'-0"

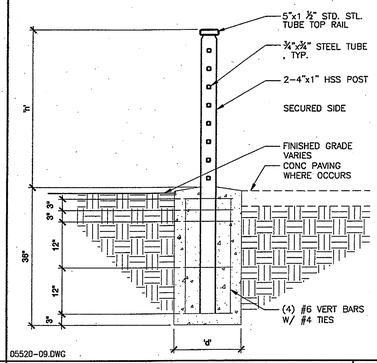

05520-09.DWG

ORNAMENTAL FENCE STEEL POST — N1

3/4" = 1'-0"

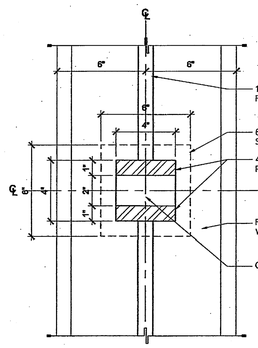

05520-16.DWG

STEEL POST DETAIL — J14

3" = 1'-0"

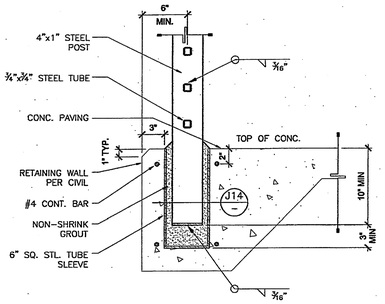

05520-15.DWG

RAILING POST IN CONC WALL — J11

1-1/2" = 1'-0"

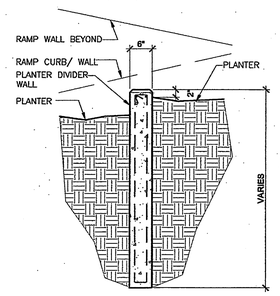

02770-8.DWG

PLANTER DIVIDER WALL — J7

3/4" = 1'-0"

Will use standard hand rail design thru out.

J4

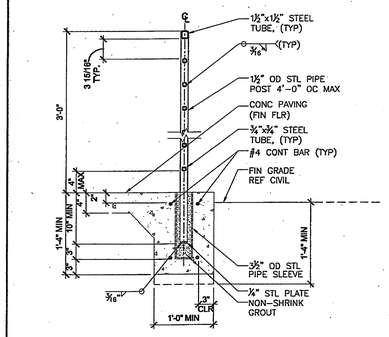

05520-14.DWG

RAILING POST FOOTING — J1

1" = 1'-0"

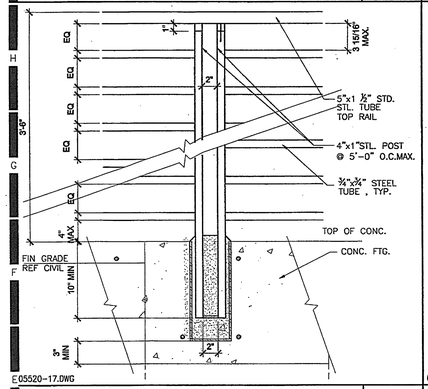

05520-17.DWG

GUARDRAIL-FRONT VIEW — E14

1-1/2" = 1'-0"

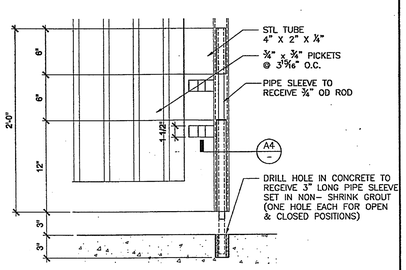

05520-24.DWG

CANE BOLT ELEVATION AT METAL GATES — E11

1-1/2" = 1'-0"

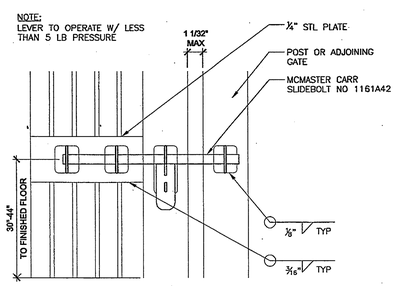

05520-25.DWG

METAL GATE LATCH — E7

3" = 1'-0"

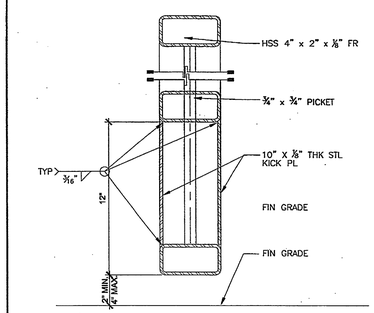

05520-22.DWG

ORNAMENTAL GATE SECTION — E4

3" = 1'-0"

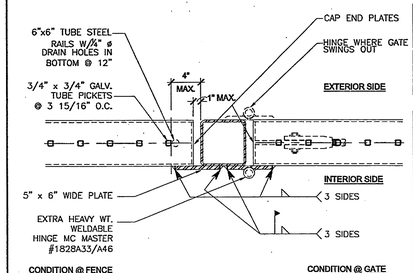

05520-20.DWG

ORNAMENTAL FENCE AT STEEL POST — E1

1-1/2" = 1'-0"

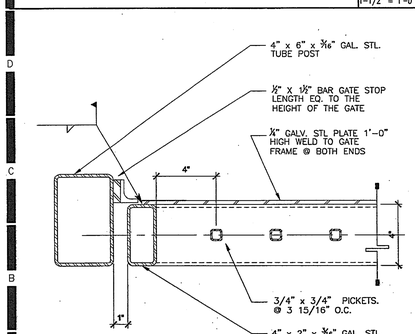

A05520-23.DWG

GATE JAMB - LOCK DETAIL — A14

3" = 1'-0"

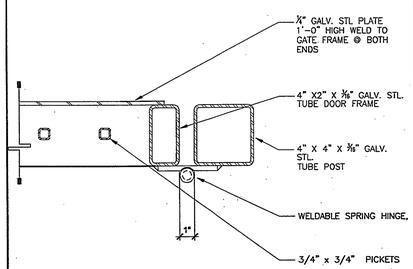

05520-19.DWG

GATE JAMB - HINGE DETAIL — A11

3" = 1'-0"

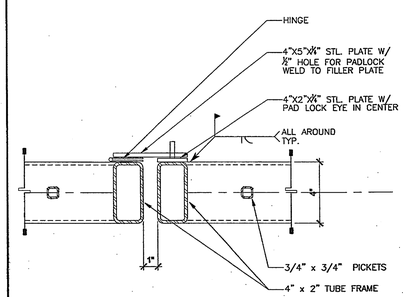

05520-21.DWG

GATE JAMB - HINGE DETAIL — A7

3" = 1'-0"

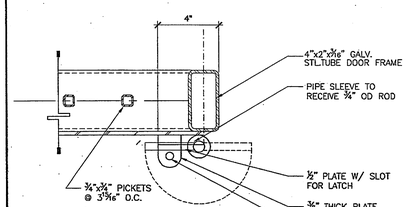

05520-13.DWG

CANE BOLT PLAN AT METAL GATE — A4

3" = 1'-0"

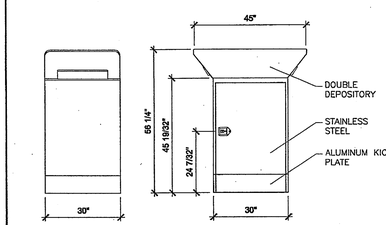

06550-01.DWG

DOUBLE DROP BOOK DEPOSITORY — A1

1/2" = 1'-0"

HMC ARCHITECTS
Architecture Interiors Planning
3546 CONCOURS STREET
ONTARIO, CALIFORNIA 91764
Telephone: 909 . 989 . 9979
Fax: 909 . 483 . 1400
www. hmcarchitects .com

AS BUILT

Key Plan

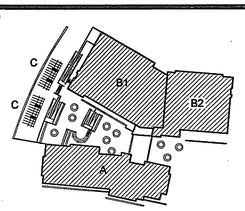

Consultant's Seal

Agency Approval

Project Title

CITY OF RIVERSIDE

ORANGE TERRACE LIBRARY / COMMUNITY CENTER

PLAN CHECK NO. 07-1397

20010 ORANGE TERRACE PARKWAY
RIVERSIDE, CA 92508

HMC ARCHITECTS

No.	Revisions/Submissions	Date:
	Design Development Submittal	12/18/06
	Building Department Submittal	03/29/07
1	Building Department Resubmittal	05/22/07
2	Building Department Resubmittal / QA QC Review	06/22/07

Drawing Title

SITE DETAILS

Architect's Seal

LICENSED ARCHITECT — CHRISTOPHER A. RUPPRECHT — LICENSE NO. C-19759 — REN. 02-24-09 — STATE OF CALIFORNIA

Designed: SS	Project No. 2340001
Drawn: LT	Scale: AS NOTED
Checked: LP	Drawing No.
Reviewed: RS	A10.2.4
Date: 06-22-07	Sheet 01 of ##

File Name: N:\2005 Jobs\2340 City of Riverside - Diffenbaugh\001-000\18-CAD\Sheets\A10.2.4 SITE SECTIONS.dwg Jun 21,2007-12:52pm

PLEASE RECYCLE A10.2.4 SITE SECTIONS.DWG

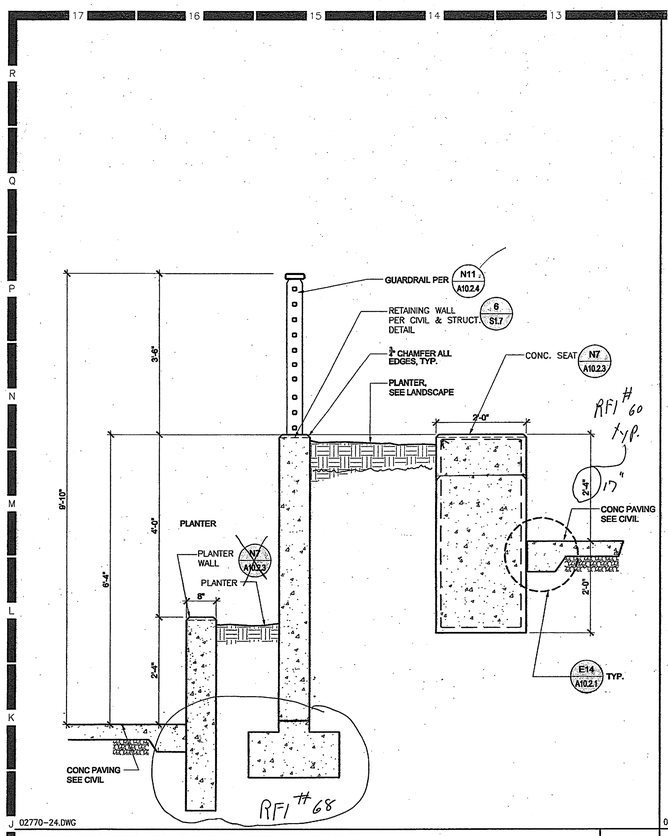

J 02770-24.DWG

SECTION THRU PLANTER / RETAINING WALL | J12 | 3/4" = 1'-0"

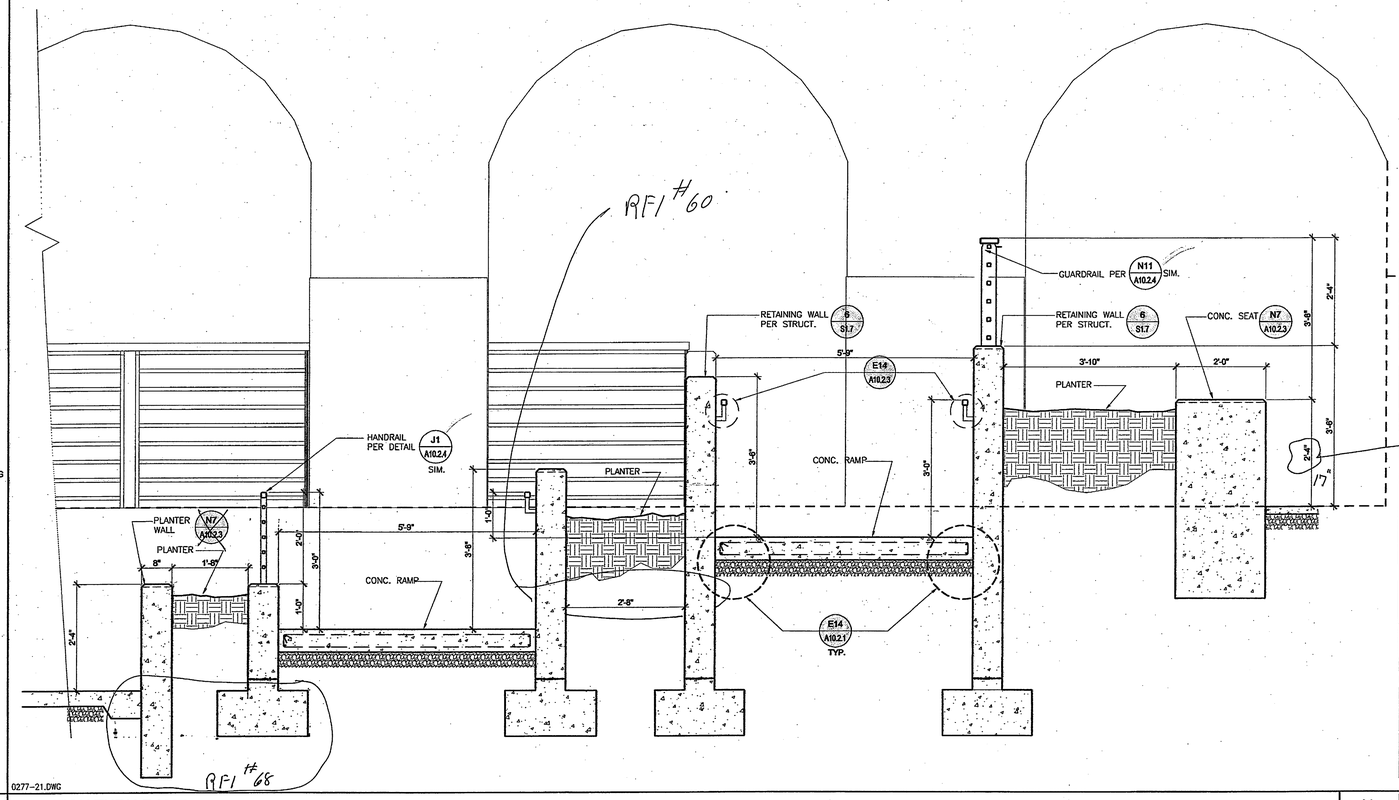

0277-21.DWG

SECTION THRU RAMP | J1 | 3/4" = 1'-0"

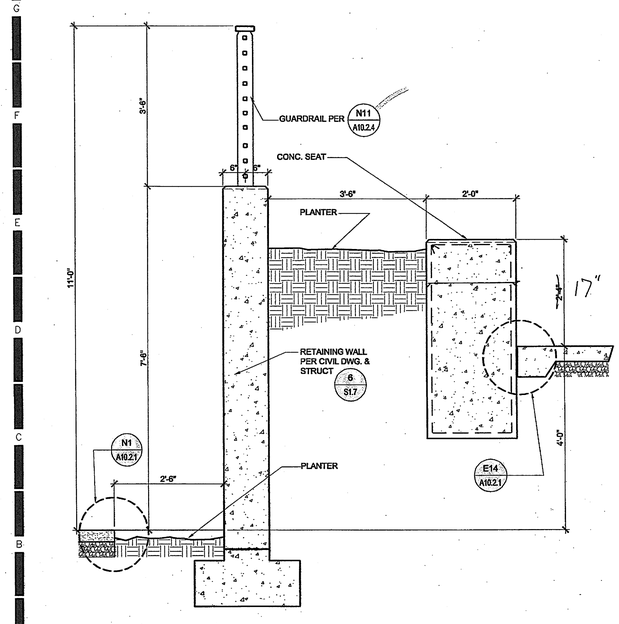

A 02770-23.DWG

SECTION THRU RETAINING WALL | A12 | 3/4" = 1'-0"

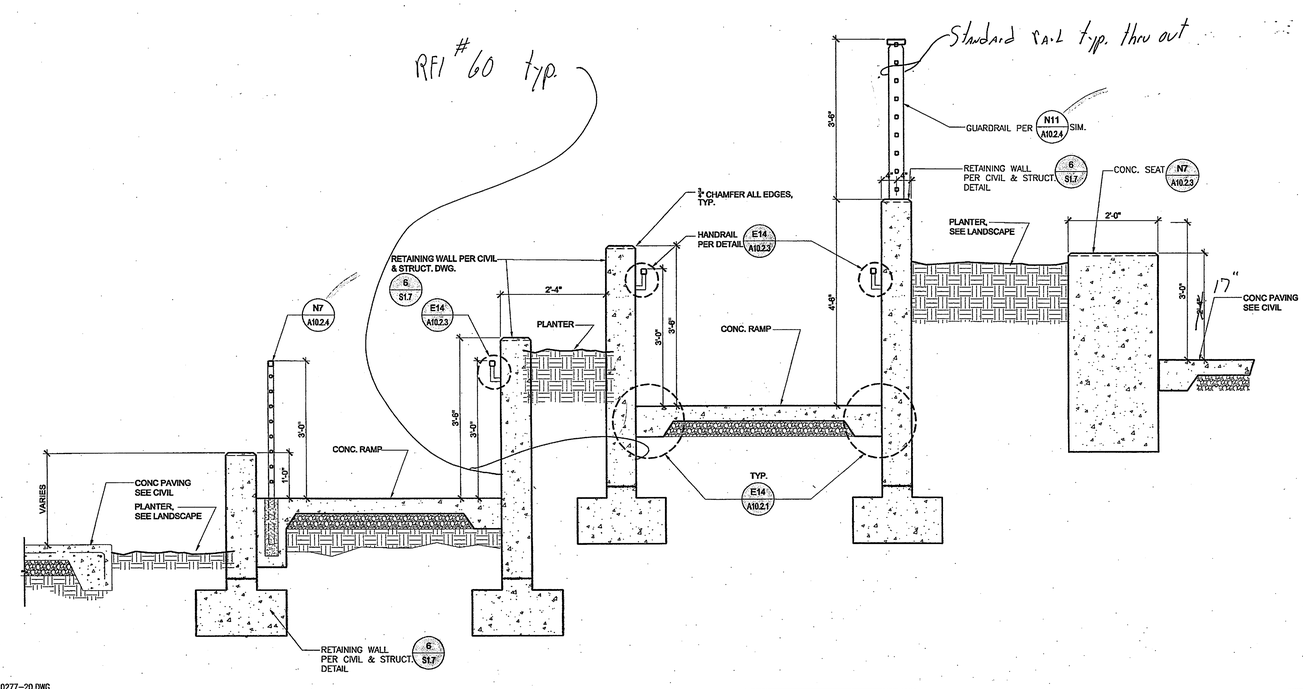

0277-20.DWG

A1

HMC ARCHITECTS
Architecture Interiors Planning
3546 CONCOURS STREET
ONTARIO, CALIFORNIA 91764
Telephone: 909 . 989 . 9979
Fax: 909 . 483 . 1400
www. hmcarchitects .com

AS BUILT

Key Plan

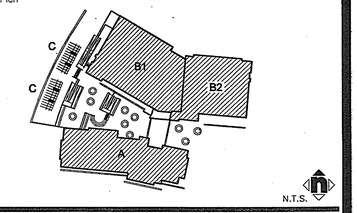

Consultant's Seal | Agency Approval

Project Title

CITY OF RIVERSIDE

ORANGE TERRACE LIBRARY / COMMUNITY CENTER
PLAN CHECK NO. 07-1397
20010 ORANGE TERRACE PARKWAY
RIVERSIDE, CA 92508

HMC ARCHITECTS

No.	Revisions/Submissions	Date:
	Design Development Submittal	12/18/06
	Building Department Submittal	03/29/07
1	Building Department Resubmittal	05/22/07
2	Building Department Resubmittal / QA QC Review	08/22/07

Drawing Title

SITE SECTIONS

Architect's Seal

LICENSED ARCHITECT CHRISTOPHER RICHARD TAYLOR NO. C-19759 REN. 02-24-09 STATE OF CALIFORNIA

Designed: SS	Project No. 2340001
Drawn: LT	Scale: AS NOTED
Checked: LP	Drawing No.
Reviewed: RS	A10.2.5
Date: 06-22-07	Sheet 01 of ##

File Name: N:\2005 Jobs\2340 City of Riverside - Diffenbaugh\001-000\18-CAD\Sheets\A10.2.5 SITE SECTION.dwg Jun 21,2007-12:52pm

PLEASE RECYCLE A10.2.5 SITE SECTION.DWG

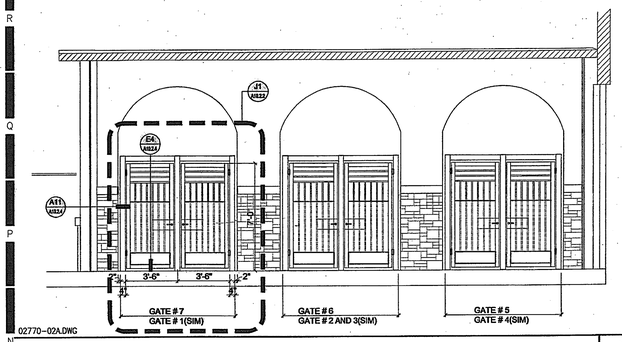

02770-02A.DWG

ORNAMENTAL FENCE ELEVATION — N12

1/4" = 1'-0"

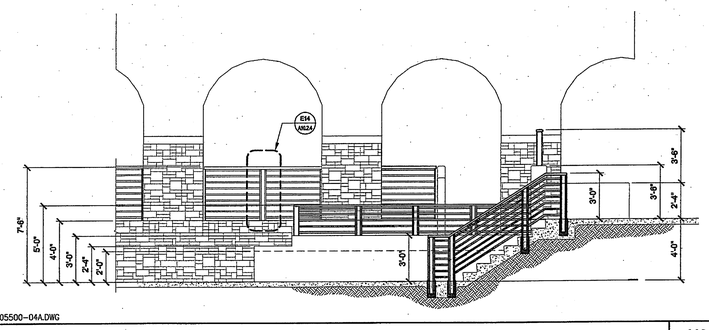

05500-04A.DWG

STAIR FENCE ELEVATION — N6

1/4" = 1'-0"

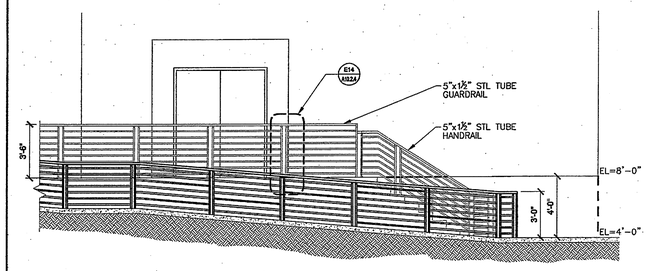

02770-04.DWG

FENCE — N1

1/4" = 1'-0"

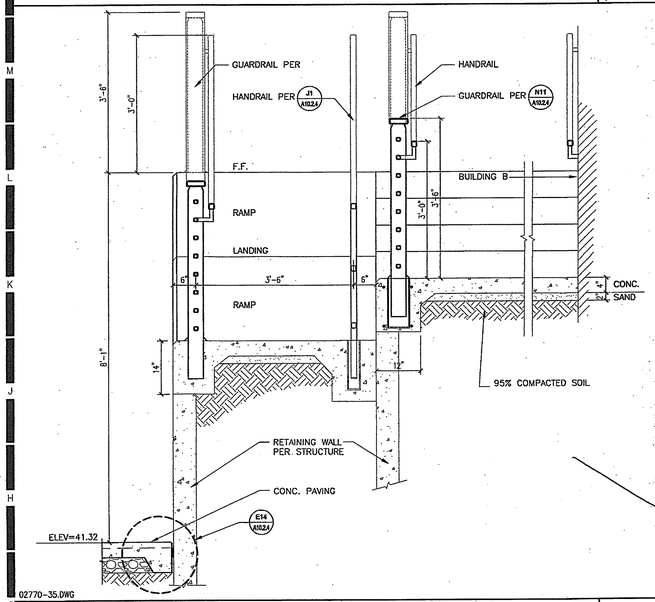

02770-35.DWG

SECTION THRU RAMP — J12

3/4" = 1'-0"

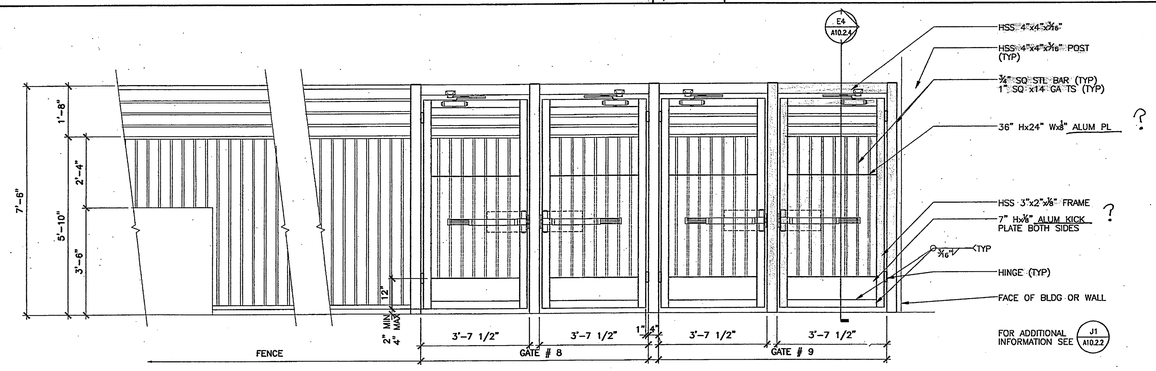

02770-9.DWG

FENCE AND GATE ELEVATION — J1

1/2" = 1'-0"

RFI #138 relocate handrail to t.o.w.

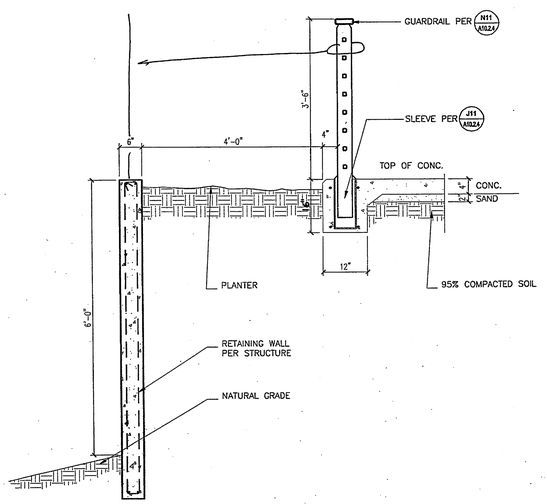

02770-34.DWG

SECTION THRU RETAINING WALL — A12

3/4" = 1'-0"

Standard guard rail thru out

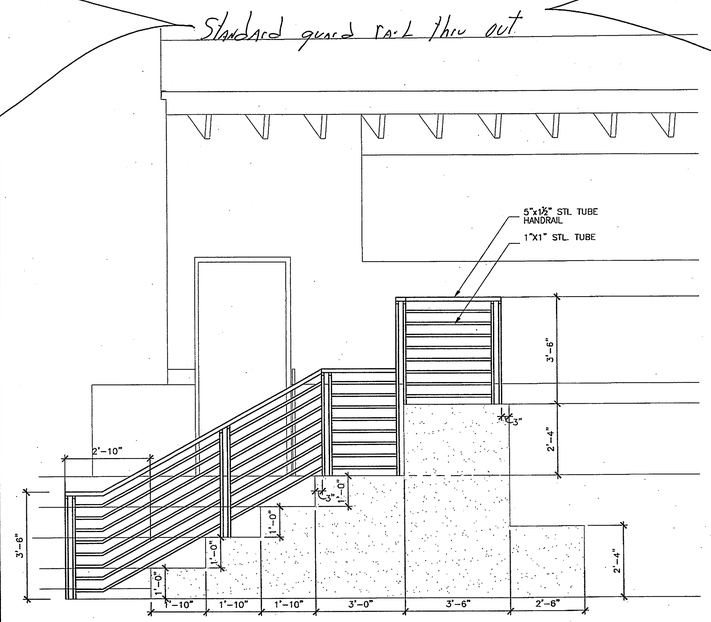

02770-01.DWG

ELEVATION AT ARENA — A12

1/2" = 1'-0"

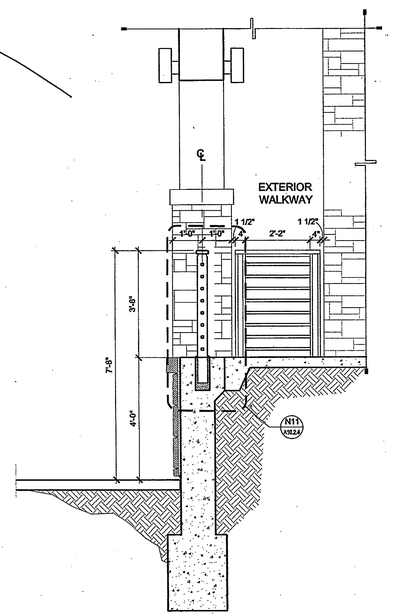

05520-18.DWG

SECTION AT ARCH — A1

1/2" = 1'-0"

HMC ARCHITECTS
Architecture Interiors Planning
3546 CONCOURS STREET
ONTARIO, CALIFORNIA 91764
Telephone: 909 . 989 . 9979
Fax: 909 . 483 . 1400
www. hmcarchitects .com

AS BUILT

Key Plan

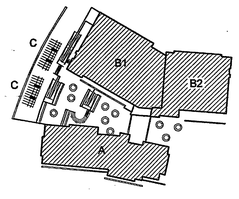

Consultant's Seal

Agency Approval

Project Title

CITY OF RIVERSIDE

ORANGE TERRACE LIBRARY / COMMUNITY CENTER

PLAN CHECK NO. 07-1397

20010 ORANGE TERRACE PARKWAY
RIVERSIDE, CA 92508

HMC ARCHITECTS

No.	Revisions/Submissions	Date:
	Design Development Submittal	12/18/06
	Building Department Submittal	03/29/07
1	Building Department Resubmittal	05/22/07
2	Building Department Resubmittal / QA QC Review	06/22/07

Drawing Title

SITE SECTIONS AND ELEVATIONS

Architect's Seal

LICENSED ARCHITECT — CHRISTOPHER R. TAYLOR — LICENSE NO. C-19759 — REN. 02-24-09 — STATE OF CALIFORNIA

Designed:	SS	Project No.	2340001
Drawn:	LT	Scale:	AS NOTED
Checked:	LP	Drawing No.	
Reviewed:	RS		A10.2.6
Date:	06-22-07	Sheet	01 of ##

File Name: N:\2005 Jobs\2340 City of Riverside – Diffenbaugh\001-000\18-CAD\Sheets\A10.2.6 SITE SECTIONS.dwg Jun 21,2007-12:52pm

PLEASE RECYCLE A10.2.6 SITE SECTIONS.DWG

HMC ARCHITECTS
Architecture Interiors Planning
3546 CONCOURS STREET
ONTARIO, CALIFORNIA 91764
Telephone: 909 . 989 . 9979
Fax: 909 . 483 . 1400
www. hmcarchitects .com

NOTES:
SIGNS SHALL BE INSTALLED CENTERED ON THE DOOR. MOUNTING HEIGHT SHALL BE 60" ABOVE THE FINISH FLOOR TO THE CENTERLINE OF THE SIGN. THE COLOR AND CONTRAST OF THE SIGN SHALL BE DISTINCTLY DIFFERENT FROM THE COLOR AND CONTRAST OF THE DOOR.

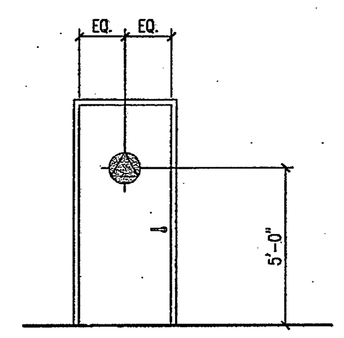

10441-08.DWG

DOOR SIGNAGE LOCATIONS — N14
N.T.S.

FINISH:

CHARACTERS, SYMBOLS, PICTOGRAMS AND THEIR BACKGROUNDS SHALL HAVE A NON-GLARE FINISH, SUCH AS MATTE, SATIN OR EGGSHELL.

CONTRAST:

CHARACTERS, SYMBOLS AND PICTOGRAMS SHALL CONTRAST WITH THEIR BACKGROUND, EITHER LIGHT CHARACTERS, SYMBOLS AND PICTOGRAMS ON A DARK BACKGROUND OR DARK CHARACTERS, SYMBOLS AND PICTOGRAMS ON A LIGHT BACKGROUND. A CONTRAST BETWEEN THE COLOR OF THE BACKGROUND AND THE COLOR OF THE CHARACTERS, SYMBOLS AND PICTOGRAMS OF AT LEAST 70% BASED ON THE LIGHT REFLECTANCE VALUE IS RECOMMENDED. A CONTRAST BETWEEN THE BACKGROUND COLOR OF THE DOOR MOUNTED TOILET ROOM SIGN AND THE COLOR OF THE DOOR OF AT LEAST 70% BASED ON THE LIGHT REFLECTANCE VALUE IS RECOMMENDED.

10441-04.DWG

SIGN COLORS & FINISH NOTES — N11
N.T.S.

TEXT:

LETTERS AND NUMBERS SHALL HAVE A WIDTH TO HEIGHT RATIO BETWEEN 3:5 AND 1:1 AND A STROKE WIDTH TO HEIGHT RATIO BETWEEN 1:5 AND 1:10. LETTERS AND NUMBERS ON SIGNS SHALL BE RAISED 1/32" MINIMUM AND SHALL BE SANS-SERIF UPPERCASE CHARACTERS ACCOMPANIED BY GRADE 2 BRAILLE. RAISED CHARACTERS OR SYMBOLS SHALL BE A MINIMUM OF 5/8" HIGH AND A MAXIMUM OF 2" HIGH. THE MINIMUM AND MAXIMUM HEIGHT IS MEASURED USING AN UPPERCASE X. VERIFY TEXT WITH DOOR SCHEDULE.

BRAILLE SYMBOLS:

CALIFORNINA CONTRACTED GRADE 2 BRAILLE SHALL BE USED WHEREVER BRAILLE SYMBOLS ARE REQUIRED BY EITHER THE CALIFORNIA BUILDING CODE OR THE AMERICANS WITH DISABILITIES ACT ACCESSIBILITY GUIDELINES. BRAILLE SHALL BE LOCATED A MINIMUM OF 1/2" FROM TACTILE CHARACTERS. BRAILLE DOTS SHALL BE 1/10" ON CENTERS IN EACH CELL WITH 2/10" SPACE BETWEEN CELLS. BRAILLE DOTS SHALL BE RAISED 1/40" MINIMUM ABOVE THE BACKGROUND. BRAILLE DOTS TO HAVE DOMED TOPS.

10441-04.DWG

TEXT AND BRAILLE NOTES — N7
N.T.S.

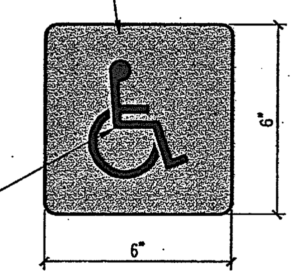

LOCATE PER DETAIL J11/-
REFER TO SPEC. SECTION 10441 FOR ADDITIONAL INFORMATION
PROVIDE SIGN AT ALL ACCESSIBLE ENTRANCE DOORS U.N.O.
FOR PICTOGRAM STANDARDS SEE DETAIL N1/-

10441-01.DWG

ACCESSIBLE ENTRANCE SIGNAGE — N4
3"=1'-0"

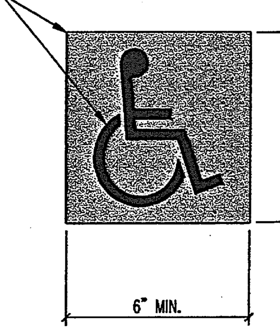

U.N.O. PICTOGRAMS (PICTORIAL SYMBOL SIGNS) SHALL BE ACCOMPANIED BY THE EQUIVALENT VERBAL DESCRIPTION PLACED DIRECTLY BELOW THE PICTOGRAM. THE BORDER DIMENSION OF THE PICTOGRAM SHALL BE A MINIMUM OF 6" IN HEIGHT.

10440-02.DWG

PICTOGRAM STANDARDS — N1
3"=1'-0"

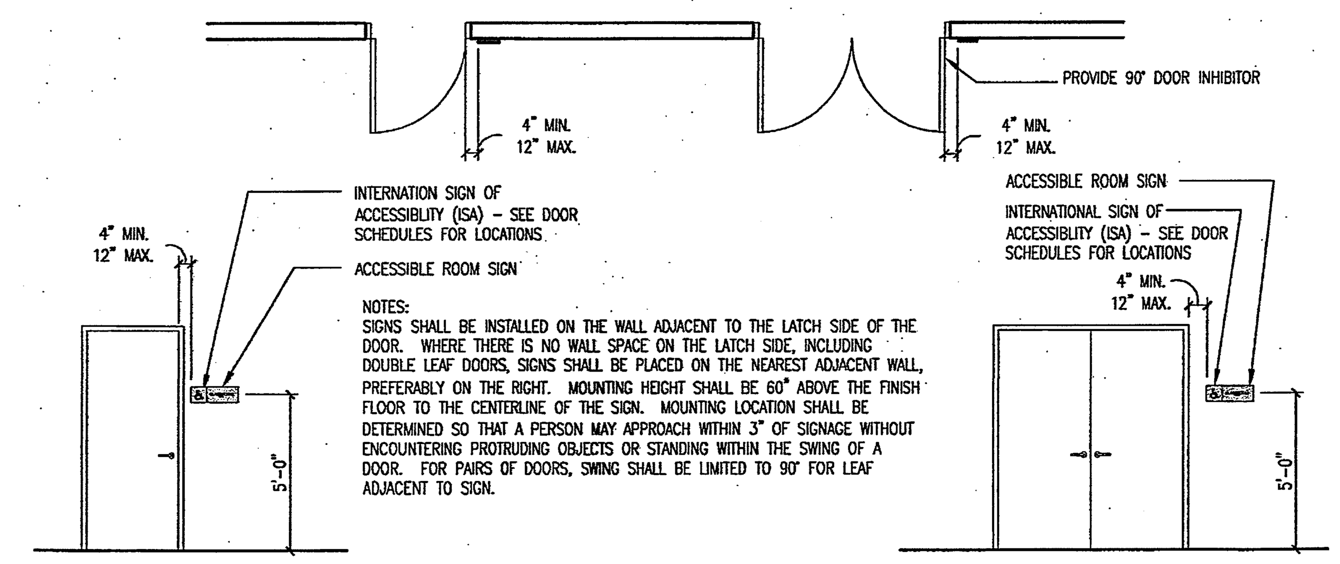

NOTES:
SIGNS SHALL BE INSTALLED ON THE WALL ADJACENT TO THE LATCH SIDE OF THE DOOR. WHERE THERE IS NO WALL SPACE ON THE LATCH SIDE, INCLUDING DOUBLE LEAF DOORS, SIGNS SHALL BE PLACED ON THE NEAREST ADJACENT WALL, PREFERABLY ON THE RIGHT. MOUNTING HEIGHT SHALL BE 60" ABOVE THE FINISH FLOOR TO THE CENTERLINE OF THE SIGN. MOUNTING LOCATION SHALL BE DETERMINED SO THAT A PERSON MAY APPROACH WITHIN 3" OF SIGNAGE WITHOUT ENCOUNTERING PROTRUDING OBJECTS OR STANDING WITHIN THE SWING OF A DOOR. FOR PAIRS OF DOORS, SWING SHALL BE LIMITED TO 90° FOR LEAF ADJACENT TO SIGN.

10441-07.DWG

WALL MOUNTED DOOR SIGNAGE LOCATIONS — J11
N.T.S.

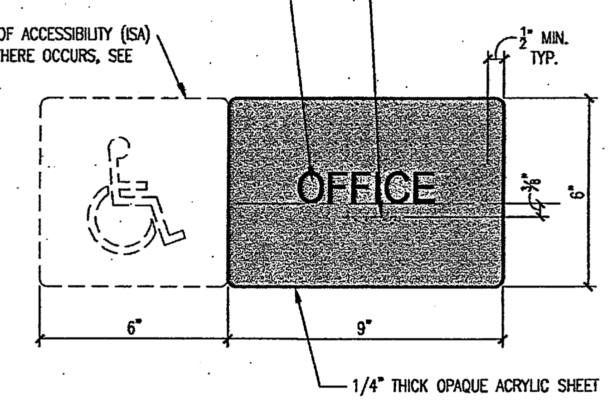

LOCATE PER DETAIL J11/-
REFER TO SPEC. SECTION 10440 FOR ADDITIONAL INFORMATION
PROVIDE SIGN AT ALL DOORS U.N.O.
FOR ADDITIONAL TEXT, BRAILLE & COLOR NOTES SEE DETAILS N7/- & N11/-

10441-03.DWG

ROOM SIGNAGE — J7
N.T.S.

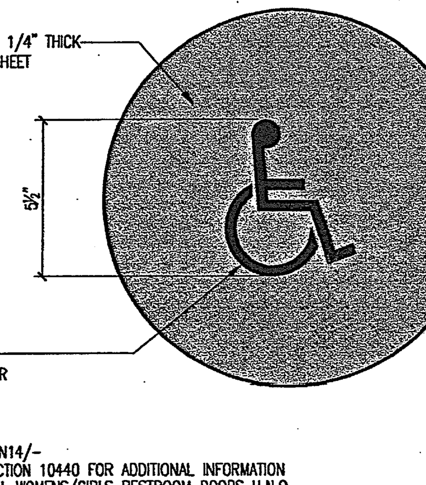

LOCATE PER DETAIL N14/-
REFER TO SPEC. SECTION 10440 FOR ADDITIONAL INFORMATION
PROVIDE SIGN ON ALL WOMENS/GIRLS RESTROOM DOORS U.N.O.
FOR PICTOGRAM STANDARDS SEE DETAIL N1/-
SIGN COLOR SHALL DISTINCTLY CONTRAST WITH DOOR COLOR SEE DETAIL N11/-

10440-04.DWG

RESTROOM SIGNAGE — J4
3"=1'-0"

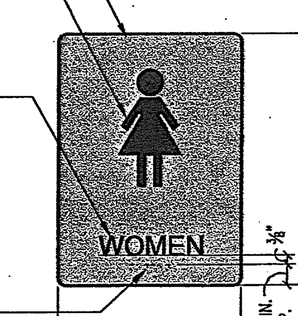

LOCATE PER DETAIL J11/-
REFER TO SPEC. SECTION 10440 FOR ADDITIONAL INFORMATION
PROVIDE SIGN AT ALL WOMENS/GIRLS RESTROOM DOORS U.N.O.
FOR PICTOGRAM STANDARDS SEE DETAIL N1/-
FOR ADDITIONAL TEXT, BRAILLE & COLOR NOTES SEE DETAILS N7/- & N11/-

10440-01.DWG

RESTROOM SIGNAGE — J1
3"=1'-0"

AS BUILT

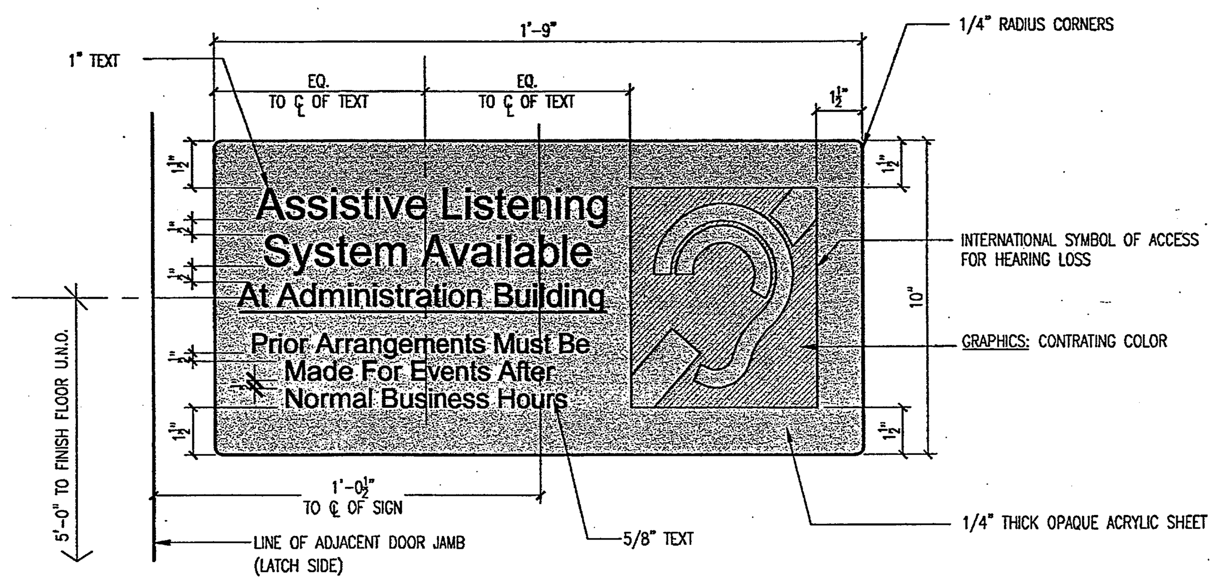

10475-01.DWG

ASSISTIVE LISTENING SIGNAGE DETAIL — E11
N.T.S.

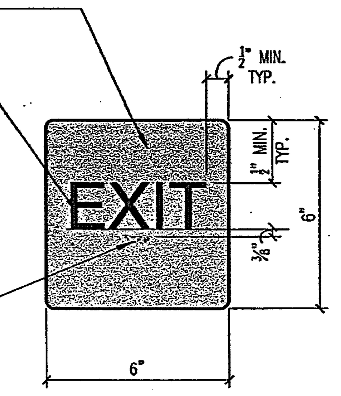

LOCATE PER DETAIL J11/-
PROVIDE SIGN AT INTERIOR OF EXIT DOORS PER SCHEDULE.
REFER TO SPEC. SECTION 10431 FOR ADDITIONAL INFORMATION
FOR ADDITIONAL TEXT, BRAILLE & COLOR NOTES SEE DETAILS N7/- & N11/-

10441-05.DWG

EXIT SIGNAGE — E7
3"=1'-0"

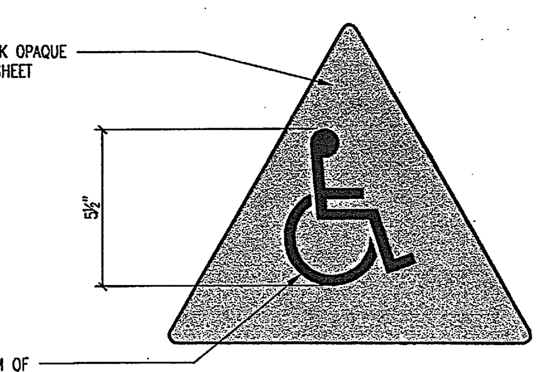

LOCATE PER DETAIL N14/-
REFER TO SPEC. SECTION 10440 FOR ADDITIONAL INFORMATION
PROVIDE SIGN ON ALL MENS/BOYS RESTROOM DOORS U.N.O.
FOR PICTOGRAM STANDARDS SEE DETAIL N1/-
SIGN COLOR SHALL DISTINCTLY CONTRAST WITH DOOR COLOR SEE DETAIL N11/-

10440-05.DWG

RESTROOM SIGNAGE — E4
3"=1'-0"

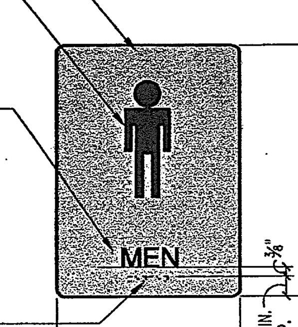

LOCATE PER DETAIL J11/-
REFER TO SPEC. SECTION 10440 FOR ADDITIONAL INFORMATION
PROVIDE SIGN AT ALL MENS/BOYS RESTROOM DOORS U.N.O.
FOR PICTOGRAM STANDARDS SEE DETAIL N1/-
FOR ADDITIONAL TEXT, BRAILLE & COLOR NOTES SEE DETAILS N7/- & N11/-

10440-02.DWG

RESTROOM SIGNAGE — E1
3"=1'-0"

A14

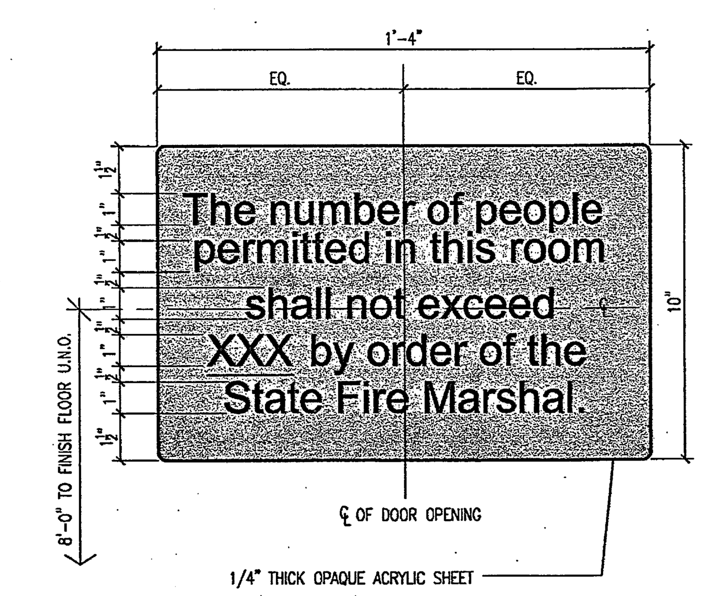

10441-06.DWG

ROOM CAPACITY SIGNAGE — A11
3"=1'-0"

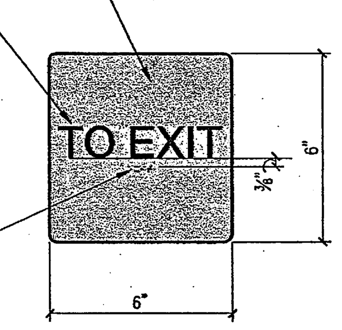

LOCATE PER DETAIL J11/-
PROVIDE SIGN AT INTERIOR OF EXIT DOORS PER SCHEDULE.
REFER TO SPEC. SECTION 10431 FOR ADDITIONAL INFORMATION
FOR ADDITIONAL TEXT & BRAILLE NOTES SEE DETAIL N7/-

10441-09.DWG

EXIT ROUTE SIGNAGE — A7
3"=1'-0"

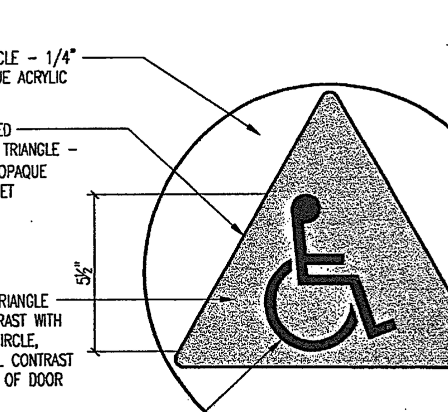

LOCATE PER DETAIL N14/-
REFER TO SPEC. SECTION 10440 FOR ADDITIONAL INFORMATION
PROVIDE SIGN ON ALL UNISEX RESTROOM DOORS U.N.O.
FOR PICTOGRAM STANDARDS SEE DETAIL N1/-
SIGN COLOR SHALL DISTINCTLY CONTRAST WITH DOOR COLOR SEE DETAIL N11/-

10440-06.DWG

RESTROOM SIGNAGE — A4
3"=1'-0"

LOCATE PER DETAIL J11/-
REFER TO SPEC. SECTION 10440 FOR ADDITIONAL INFORMATION
PROVIDE SIGN AT ALL UNISEX RESTROOM DOORS U.N.O.
FOR PICTOGRAM STANDARDS SEE DETAIL N1/-
FOR ADDITIONAL TEXT, BRAILLE & COLOR NOTES SEE DETAILS N7/- & N11/-

10440-03.DWG

RESTROOM SIGNAGE — A1
3"=1'-0"

Key Plan

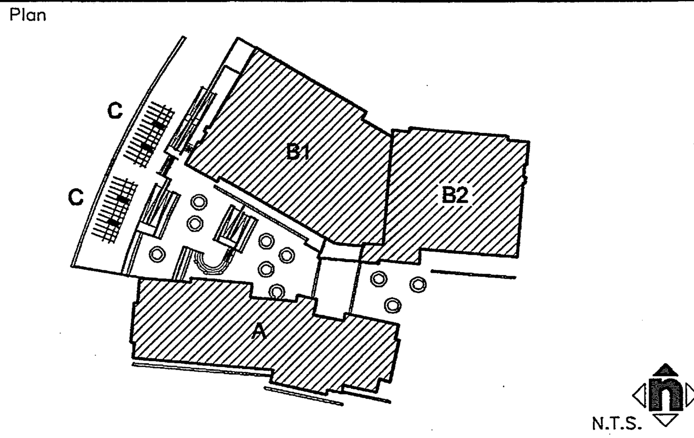

Consultant's Seal

Agency Approval

Project Title

CITY OF RIVERSIDE

ORANGE TERRACE LIBRARY / COMMUNITY CENTER
PLAN CHECK NO. 07-1397

20010 ORANGE TERRACE PARKWAY
RIVERSIDE, CA 92508

HMC ARCHITECTS

No.	Revisions/Submissions	Date:
	Design Development Submittal	12/18/06
	Building Department Submittal	03/29/07
1	Building Department Resubmittal	05/22/07
2	Building Department Resubmittal / QA QC Review	06/22/07

Drawing Title

SIGNAGE DETAILS

Architect's Seal: LICENSED ARCHITECT CHRISTOPHER RICHARD TAYLOR NO. C-19759 REN. 02-24-09 STATE OF CALIFORNIA

Designed:	SS	Project No.	2340001
Drawn:	MM	Scale:	AS NOTED
Checked:	LP	Drawing No.	
Reviewed:	RS	A10.4.1	
Date:	06-22-07	Sheet	of ##

FIRE LANE LAW SIGN | N14 | 3" = 1'-0"

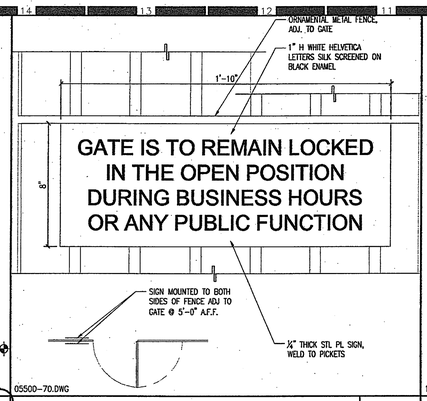

GATE SIGNAGE | N11 | 3" = 1'-0"

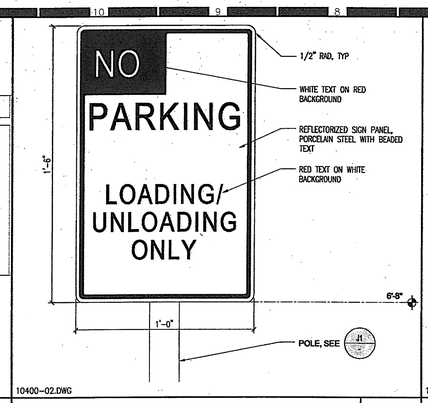

LOADING / UNLOADING ONLY SIGN | N7 | 3" = 1'-0"

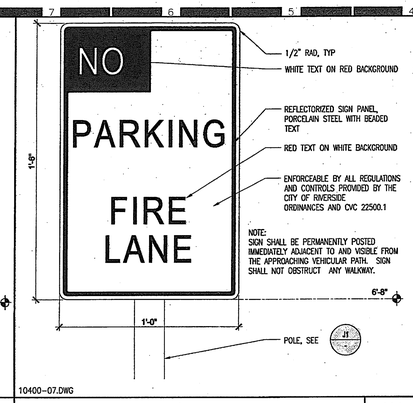

FIRE LANE SIGN | N4 | 3" = 1'-0"

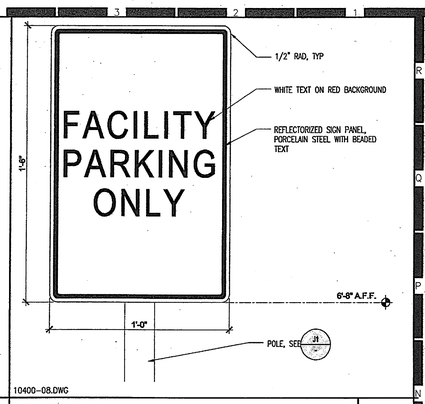

FACILITY PARKING ONLY SIGN | N1 | 3" = 1'-0"

J14

J11

J7

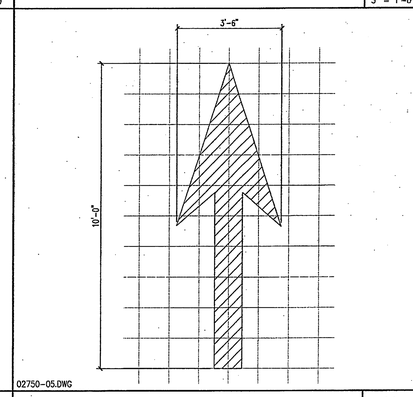

PAINTED DIRECTIONAL ARROW | J4 | 1"=1'-0"

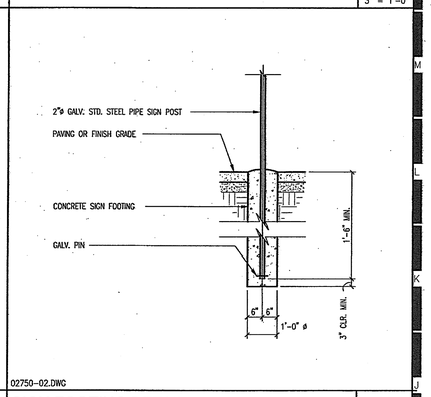

SIGN FOOTING DETAIL | J1 | 1/2"=1'-0"

E14

E11

E7

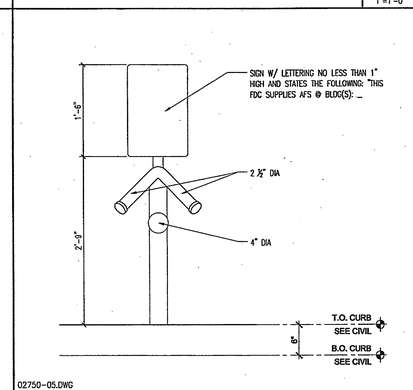

(FDC) FIRE DEPARTMENT CONNECTION | E4 | 1"=1'-0"

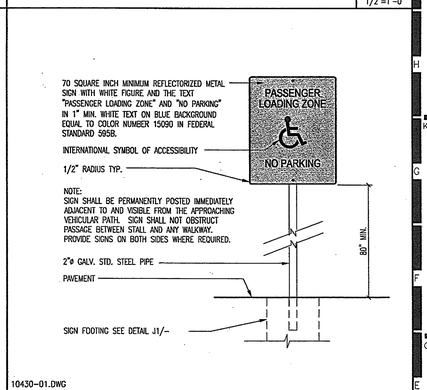

PASENGER LOADING ZONE SIGN | E1 | 1 1/2"=1'-0"

A14

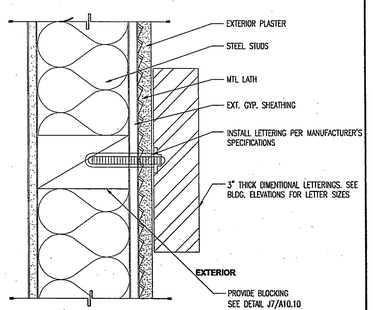

DIMENSIONAL LETTER MOUNTING DETAIL | A11 | 3" = 1'-0"

SIGN NOTES:

A REFLECTORIZED SIGN SHALL BE PERMANENTLY POSTED IN A CONSPICUOUS PLACE AT EACH ENTRANCE TO OFF-STREET PARKING FACILITIES, OR IMMEDIATELY ADJACENT TO TO AND VISIBLE FROM EACH STALL OR SPACE. THE SIGN SHALL NOT BE LESS THAN 17" BY 22" IN SIZE WITH WHITE LETTERING NOT LESS THAN 1" IN HEIGHT ON A DARK BLUE BACKGROUND, WHICH CLEARLY AND CONSPICUOUSLY STATES THE FOLLOWING:

"UNAUTHORIZED VEHICLES PARKED IN DESIGNATED ACCESSIBLE SPACES NOT DISPLAYING DISTINGUISHING PLACARDS OR LICENSE PLATES ISSUED FOR PERSONS WITH DISABILITIES MAY BE TOWED AWAY AT OWNER'S EXPENSE. TOWED VEHICLES MAY BE RECLAIMED AT: RIVERSIDE POLICE DEPARTMENT, 4102 ORANGE ST., RIVERSIDE, OR BY TELEPHONING (951) 826-5700"

RECLAMATION ADDRESS AND TELEPHONE NUMBER SHALL BE PROVIDED BY OWNER AND INCLUDED BY CONTRACTOR AS A PERMANENT PART OF THIS SIGN. DARK BLUE BACKGROUND COLOR SHALL BE EQUAL TO COLOR NUMBER 15090 IN FEDERAL STANDARD 595B. SIGN SHALL NOT OBSTRUCT PASSAGE BETWEEN STALL AND ANY ACCESSIBLE WALKWAY. SEE SITE PLAN FOR LOCATIONS.

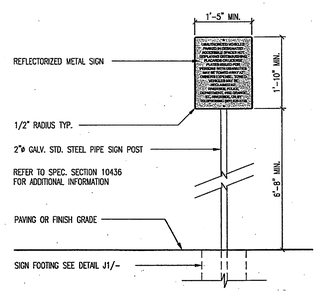

TOW AWAY SIGN | A4 | 1/2" = 1'-0"

THE SURFACE OF EACH ACCESSIBLE PARKING SPACE OR STALL SHALL HAVE A SURFACE IDENTIFICATION. THE PAVEMENT SYMBOL SHALL CONSIST OF A PROFILE VIEW OF A WHEELCHAIR WITH OCCUPANT IN WHITE ON A BLUE BACKGROUND. THE PROFILE VIEW SHALL BE LOCATED SO THAT IT IS VISIBLE TO A TRAFFIC ENFORCEMENT OFFICER WHEN A VEHICLE IS PROPERLY PARKED IN THE SPACE AND SHALL BE 36" HIGH BY 36" WIDE.

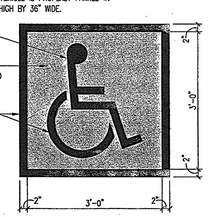

NOTE: SYMBOL SHALL COMPLY WITH SECTION 3107 CBC.

ACCESSIBLE PARKING SYMBOL | A1 | 3/4"=1'-0"

HMC ARCHITECTS
Architecture Interiors Planning
3546 CONCOURS STREET
ONTARIO, CALIFORNIA 91764
Telephone: 909 . 989 . 9979
Fax: 909 . 483 . 1400
www. hmcarchitects .com

AS BUILT

Key Plan

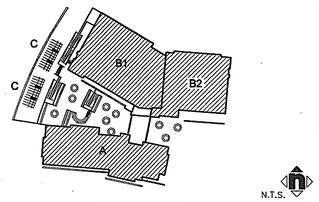

Consultant's Seal

Agency Approval

Project Title

ORANGE TERRACE LIBRARY / COMMUNITY CENTER
PLAN CHECK NO. 07-1397

20010 ORANGE TERRACE PARKWAY
RIVERSIDE, CA 92508

CITY OF RIVERSIDE

SM HMC ARCHITECTS

No.	Revisions/Submissions	Date:
	Design Development Submittal	12/18/06
	Building Department Submittal	03/29/07
1	Building Department Resubmittal	05/22/07
2	Building Department Resubmittal / QA QC Review	06/22/07

Drawing Title

SIGNAGE DETAILS

Architect's Seal

LICENSED ARCHITECT CHRISTOPHER L. BUDNAY NO. C-19759 REN. 02-24-10 STATE OF CALIFORNIA

Designed: SS	Project No. 2340001
Drawn: XL	Scale: AS NOTED
Checked: LP	Drawing No.
Reviewed: RS	A10.4.2
Date: 06-22-07	Sheet of ##

File Name: N:\2005 Jobs\2340 City of Riverside – Diffenbough\001-000\18-CAD\Sheets\A10.4.2 SIGNAGE DETAILS.dwg Jun 21,2007-12:51pm

PLEASE RECYCLE A10.4.2 SIGNAGE DETAILS.DWG

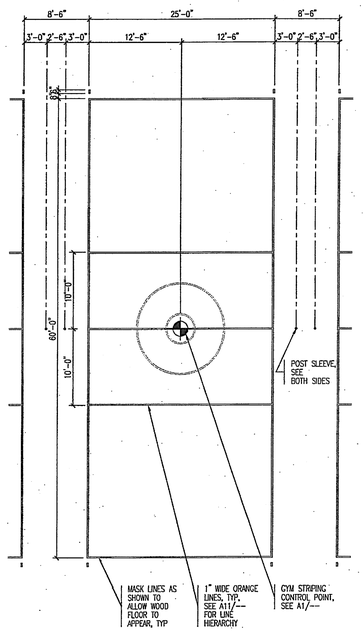

114-04.DWG

PRACTICE VOLLEYBALL COURT — J7

1/8" = 1'-0"

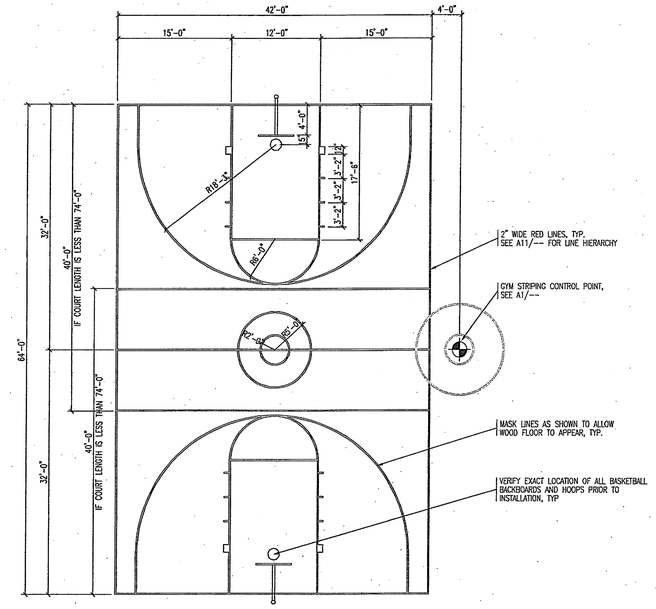

114-02.DWG

PRACTICE BASKETBALL COURT — J1

1/8" = 1'-0"

LINES AT THE BOTTOM OF THE FOLLOWING LISTS ARE BROKEN AND HAVE A 2" SPACE (SEE DETAIL BELOW) WHEN INTERSECTING ANY LINE LISTED ABOVE THEM IN THE FOLLOWING ORDER:

MAIN GYM:
1. MAIN BASKETBALL COURT, 2" BLACK LINES, SEE A1/--
2. MAIN VOLLEYBALL COURT, 2" WHITE LINES, SEE A7/--
3. SECONDARY BASKETBALL COURTS, 2" RED LINES, SEE J1/--, TYP OF 2
4. SECONDARY VOLLEYBALL COURTS, 1" ORANGE LINES, SEE J7/--, TYP OF 3

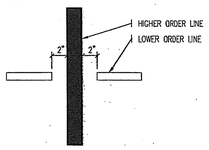

104-05.DWG

COURTLINE HIERARCHY — A11

1/8" = 1'-0"

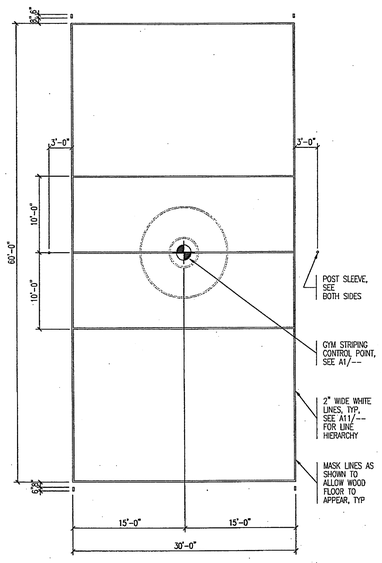

114-03.DWG

MAIN VOLLEYBALL COURT — A7

1/8" = 1'-0"

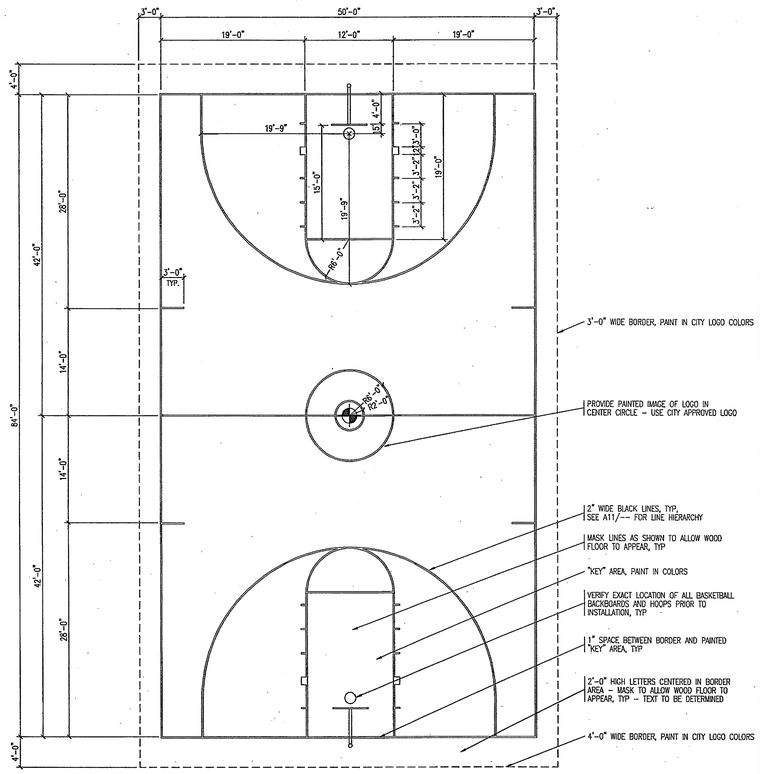

114-01.DWG

MAIN BASKETBALL COURT — A1

1/8" = 1'-0"

HMC ARCHITECTS
Architecture Interiors Planning
3546 CONCOURS STREET
ONTARIO, CALIFORNIA 91764
Telephone: 909 . 989 . 9979
Fax: 909 . 483 . 1400
www. hmcarchitects .com

AS BUILT

Key Plan

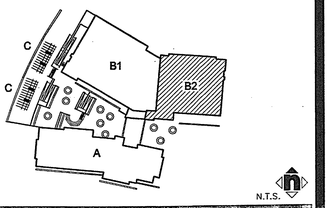

Consultant's Seal

Agency Approval

Project Title

ORANGE TERRACE LIBRARY / COMMUNITY CENTER
PLAN CHECK NO. 07-1397

20010 ORANGE TERRACE PARKWAY
RIVERSIDE, CA 92508

CITY OF RIVERSIDE

HMC ARCHITECTS

No.	Revisions/Submissions	Date:
	Design Development Submittal	12/18/06
	Building Department Submittal	03/29/07
1	Building Department Resubmittal	05/22/07
2	Building Department Resubmittal / QA QC Review	06/22/07

Drawing Title

GYMNASIUM COURT STRIPING DETAILS

Architect's Seal

LICENSED ARCHITECT — RICHARD PAYNE — REG. NO. C-19759 — REN. 02-24-09 — STATE OF CALIFORNIA

Designed: SS	Project No. 2340001
Drawn: XL	Scale: AS NOTED
Checked: LP	Drawing No.
Reviewed: RS	A10.4.3
Date: 06-22-07	Sheet 01 of ##

File Name: N:\2005 Jobs\2340 City of Riverside - Diffenbaugh\001-000\18-CAD\Sheets\A10.4.3 GYM. COURT STRIPING DETAILS.dwg Jun 21,2007-12:51pm

PLEASE RECYCLE A10.4.3 GYM. COURT STRIPING DETAILS.DWG

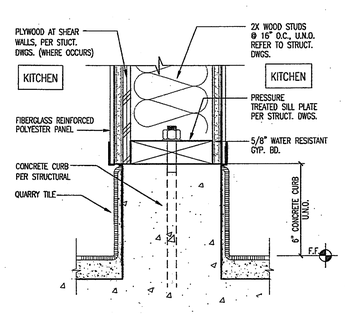

09000-91.DWG

KITCHEN WALL BASE DETAIL	N14
	3"=1'-0"

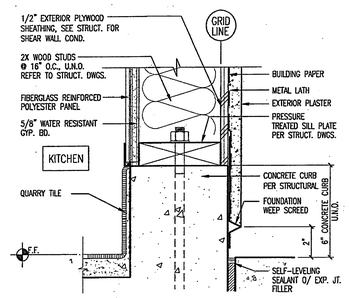

09000-08.DWG

KITCHEN WALL BASE DETAIL	N11
	3"=1'-0"

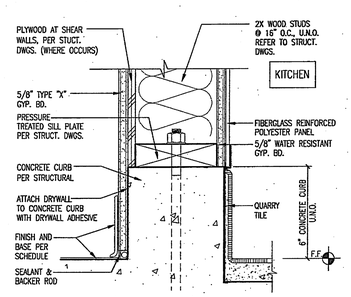

09000-07.DWG

KITCHEN WALL BASE DETAIL	N7
	3"=1'-0"

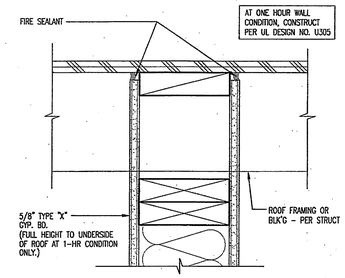

09000-04.DWG

TYP. 1-HR HEAD OF WALL DETAIL	N4
	3" = 1'-0"

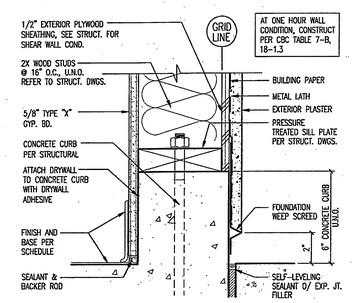

09000-01.DWG

EXTERIOR WALL BASE DETAIL	N1
	3"=1'-0"

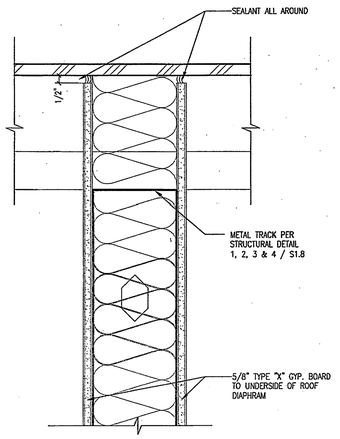

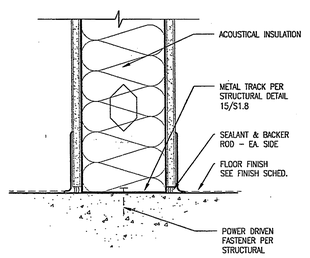

09000-24.DWG

METAL STUD INTERIOR WALL	E14
NON-BEARING AND NON-RATED	3" = 1'-0"

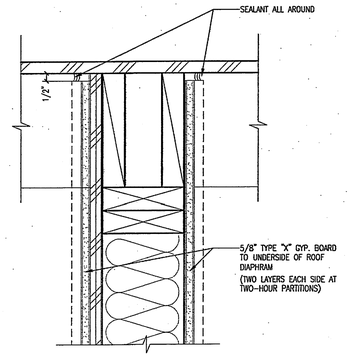

ONE LAYER 5/8" TYPE "X" GYP. BD. EACH SIDE
U.L DESIGN NO. U305 @ ONE-HOUR PARTITIONS

TWO LAYERS 5/8" TYPE "X" GYP. BD. EACH SIDE
U.L DESIGN NO. U301 @ TWO-HOUR PARTITIONS

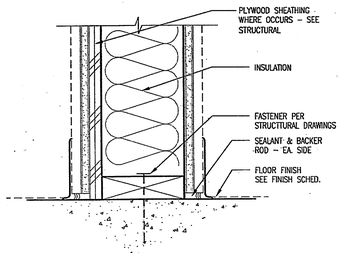

09000-23.DWG

1-HOUR & 2-HOUR WALL DETAIL	E11
	3" = 1'-0"

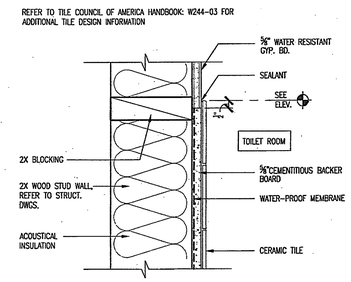

09000-21.DWG

CERAMIC TILE WAINSCOT DETAIL	J7
	3"=1'-0"

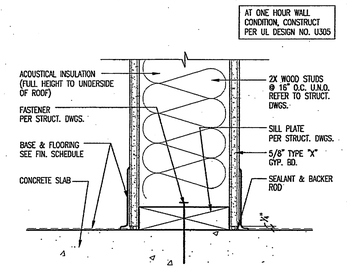

09000-04.DWG

INTERIOR WALL BASE DETAIL	J4
	3" = 1'-0"

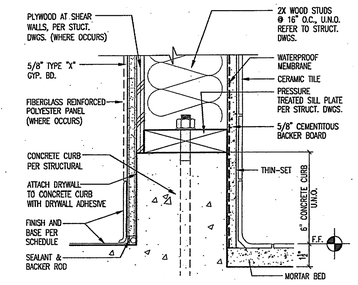

09000-02.DWG

INTERIOR WALL BASE DETAIL	J1
	3" = 1'-0"

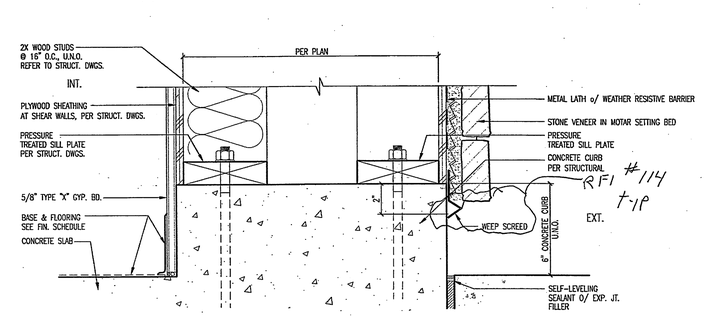

09000-06.DWG

EXTERIOR FURRING WALL BASE DETAIL	E4
	3" = 1'-0"

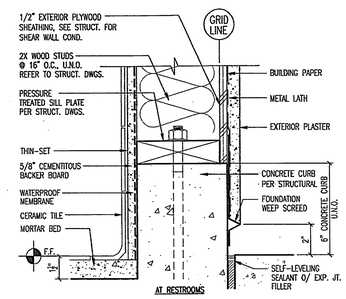

09000-03.DWG

EXTERIOR WALL BASE DETAIL	E1
	3" = 1'-0"

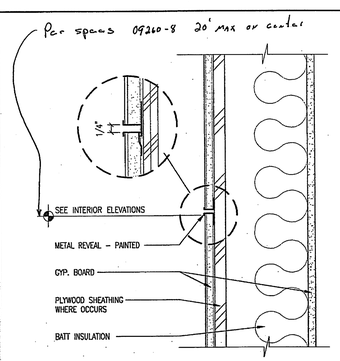

09000-25.DWG

INTERIOR GYP. BOARD REVEAL DETAIL	A11
	3" = 1'-0"

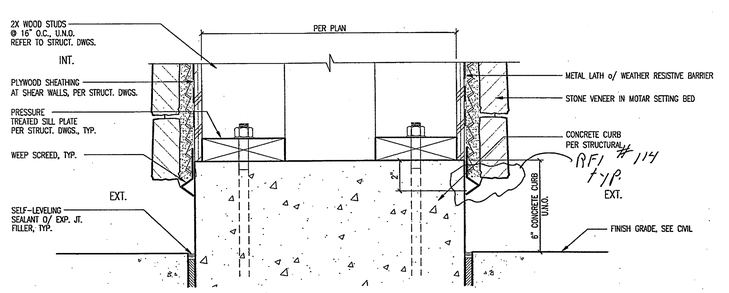

09000-11.DWG

EXTERIOR FURRING WALL BASE DETAIL	A4
	3" = 1'-0"

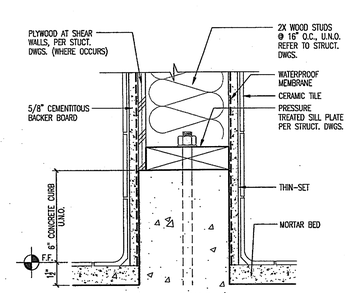

09000-05.DWG

INTERIOR WALL BASE DETAIL	A1
	3" = 1'-0"

HMC ARCHITECTS
Architecture Interiors Planning
3546 CONCOURS STREET
ONTARIO, CALIFORNIA 91764
Telephone: 909 . 989 . 9979
Fax: 909 . 483 . 1400
www. hmcarchitects .com

AS BUILT

Key Plan

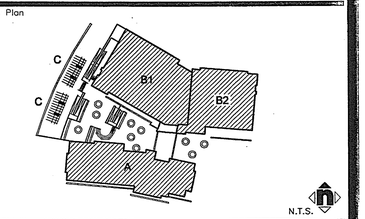

Consultant's Seal

Agency Approval

Project Title

CITY OF RIVERSIDE

ORANGE TERRACE LIBRARY / COMMUNITY CENTER

PLAN CHECK NO. 07-1397

20010 ORANGE TERRACE PARKWAY
RIVERSIDE, CA 92508

HMC ARCHITECTS

No.	Revisions/Submissions	Date:
	Design Development Submittal	12/18/06
	Building Department Submittal	03/29/07
1	Building Department Resubmittal	05/22/07
2	Building Department Resubmittal / QA QC Review	06/22/07

Drawing Title

WALL DETAILS

Architect's Seal

LICENSED ARCHITECT CHRISTOPHER R. BROWN LICENSE NO. C-19759 REN. 02-24-09 STATE OF CALIFORNIA

Designed: SS	Project No. 2340001
Drawn: XL	Scale: AS NOTED
Checked: LP	Drawing No.
Reviewed: RS	A10.5.1
Date: 06-22-07	Sheet of #

File Name: N:\2005 Jobs\2340 City of Riverside - Diffenbaugh\001-000\18-CAD\Sheets\A10.5.1 WALL DETAILS.dwg Jun 21,2007-12:51pm

PLEASE RECYCLE A10.5.1 WALL DETAILS.DWG

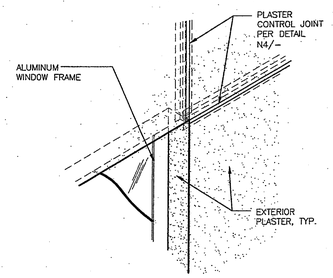

09200–16.DWG NA @ bld "A"

CONTROL JOINT AT WINDOW HEAD N11 — N.T.S.

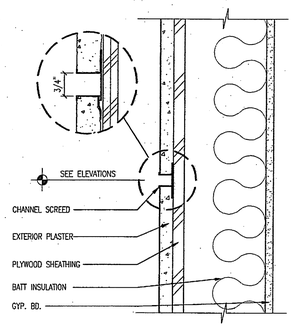

09200–15.DWG

EXTERIOR PLASTER REVEAL N7 — 3" = 1'–0"

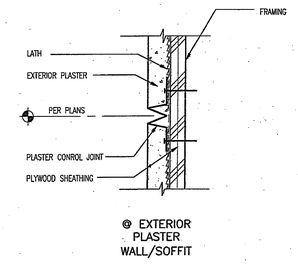

09200–13.DWG

TYPICAL CONTROL JOINT DETAIL N4 — 6"=1'–0"

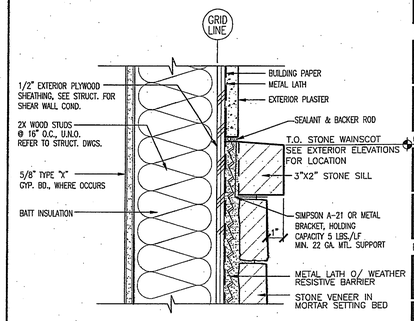

09000–19.DWG

STONE WAINSCOT AT EXT. PLASTER WALL N1 — 3"=1'–0"

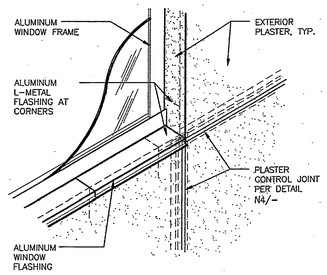

09200–17.DWG NA. @ bld "A"

CONTROL JOINT AT WINDOW SILL J11 — N.T.S.

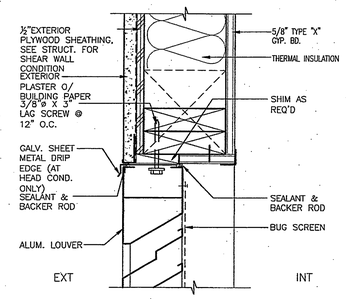

10200–01.DWG

ALUMINUM LOUVER HEAD/JAMB J7 — 3" = 1'–0"

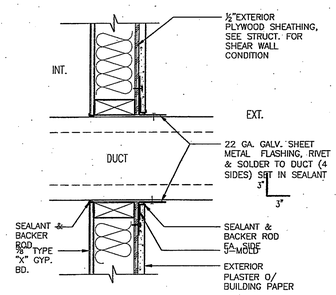

09200–14.DWG

TYP. DUCT THRU EXTERIOR WALL J4 — 1-1/2" = 1'–0"

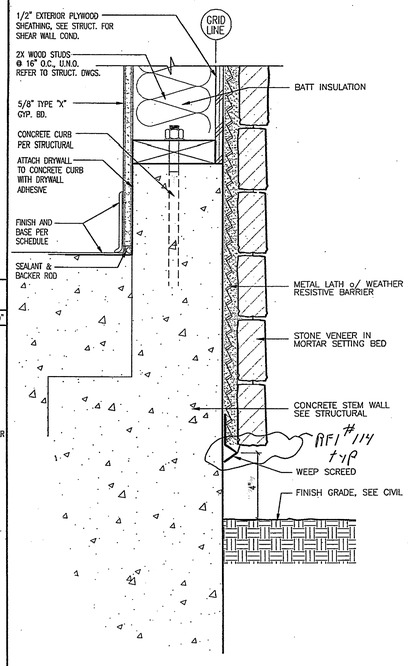

09000–18.DWG

STONE WALL @ STEM WALL E1 — 3" = 1'–0"

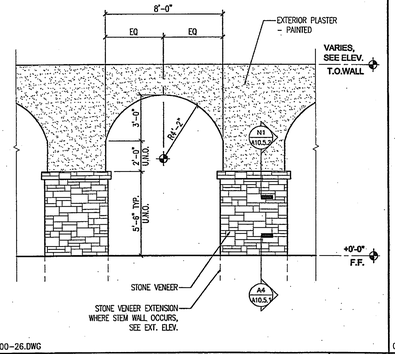

A09000–26.DWG

ENLARGED ARCH COLONADE ELEVATION A14 — 1/4" = 1'–0"

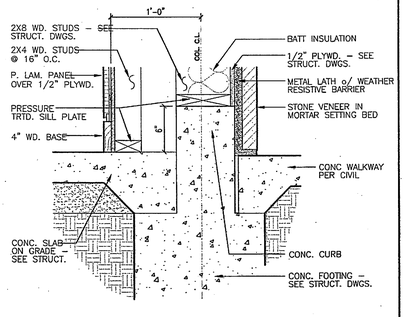

09000–15.DWG

EXTERIOR WALL BASE DETAIL A11 — 1 1/2"=1'–0"

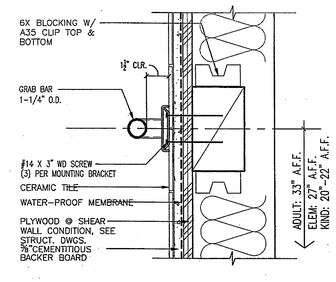

10800–03.DWG

GRAB BAR DETAIL A7 — 3" = 1'–0"

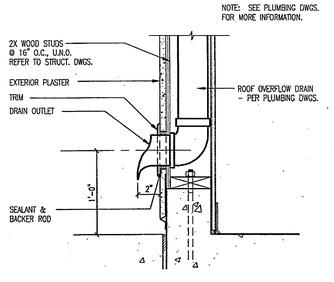

07600–02.DWG

OVERFLOW DRAIN OUTLET A4 — 1-1/2" = 1'–0"

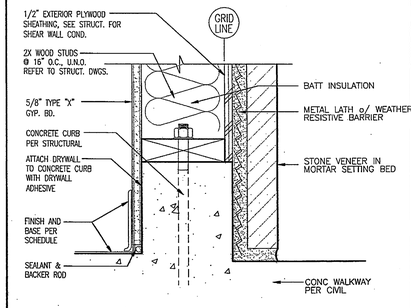

09000–17.DWG

EXTERIOR WALL AT STONE WALL A1 — 3"=1'–0"

HMC ARCHITECTS
Architecture Interiors Planning
3546 CONCOURS STREET
ONTARIO, CALIFORNIA 91764
Telephone: 909 . 989 . 9979
Fax: 909 . 483 . 1400
www. hmcarchitects .com

AS BUILT

Key Plan

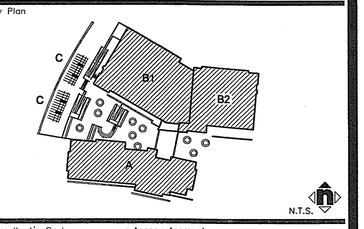

Consultant's Seal

Agency Approval

Project Title

CITY OF RIVERSIDE

ORANGE TERRACE LIBRARY / COMMUNITY CENTER

PLAN CHECK NO. 07–1397

20010 ORANGE TERRACE PARKWAY
RIVERSIDE, CA 92508

HMC ARCHITECTS

No.	Revisions/Submissions	Date:
	Design Development Submittal	12/18/06
	Building Department Submittal	03/29/07
1	Building Department Resubmittal	05/22/07
2	Building Department Resubmittal / QA QC Review	06/22/07

Drawing Title

WALL DETAILS

Architect's Seal: LICENSED ARCHITECT — CHRISTOPHER PAGANI — LICENSE NO. C–19759 — REN. 02–24–09 — STATE OF CALIFORNIA

Designed: SS	Project No. 2340001
Drawn: XL	Scale: AS NOTED
Checked: LP	Drawing No. A10.5.2
Reviewed: RS	
Date: 06-22-07	Sheet 01 of ##

File Name: N:\2005 Jobs\2340 City of Riverside – Diffenbaugh\001–000\18–CAD\Sheets\A10.5.2 WALL DETAILS.dwg Jun 21,2007–12:51pm

PLEASE RECYCLE A10.5.2 WALL DETAILS.DWG

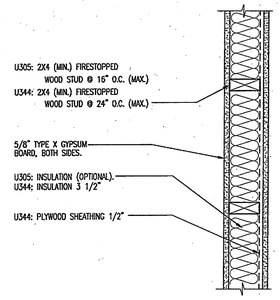

07200-09.DWG

N14 | N11 | FIRE RATED BEARING WALL | N7

UL DESIGN NO. U305 AND U344 (1 HOUR.) | 1-1/2" = 1'-0"

PENETRATION FIRESTOP FOR INSULATED CIRCULAR STL. HVAC DUCT THROUGH A SLEEVED OPENING IN A GYPSUM WALLBOARD ASSEMBLY – ELEVATION

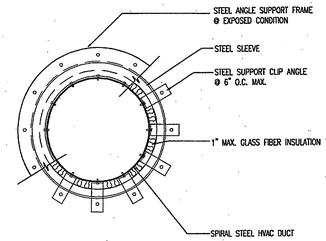

07200-05.DWG

DUCT PENET. THRU GYP. WALL ASSEMBLY | N4 | 1-1/2" = 1'-0"

PENETRATION FIRESTOP FOR A 12" MAX. DIA. INSULATED STEEL PIPE THROUGH A GYPSUM WALLBOARD ASSEMBLY – SECTION

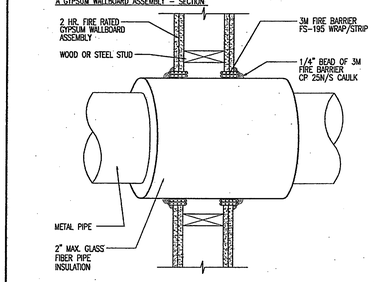

07200-01.DWG

FIRESTOPPING - GYP. WALL ASSEMBLY | N1 | 1-1/2" = 1'-0"

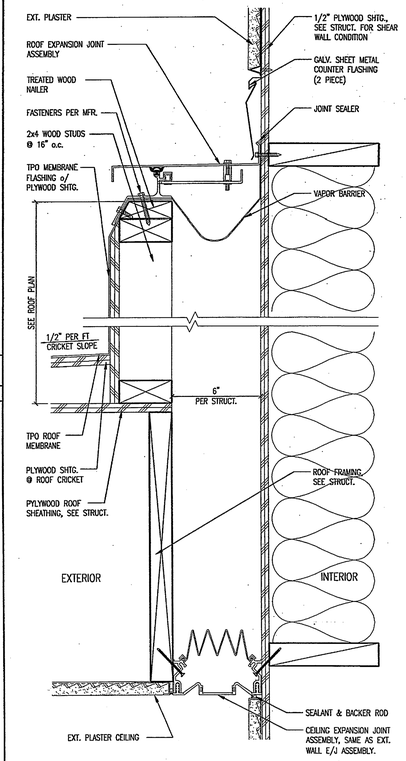

05800-02.DWG

J14 | J11 | CONDUIT PENETRATION | J4

UL SYSTEM NO. W-L-1017 (1 AND 2 HOUR.) | 1-1/2" = 1'-0"

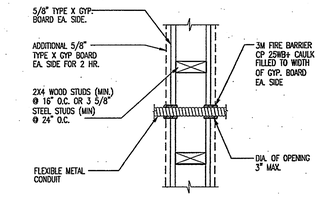

07200-06.DWG

PENETRATION FIRESTOP FOR 12" MAX. DIA. STEEL PIPE/CONDUIT THROUGH A GYPSUM WALLBOARD ASSEMBLY

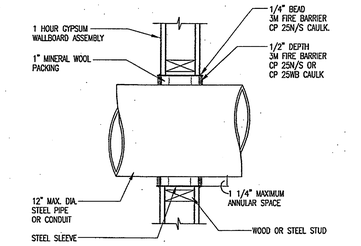

07200-02.DWG

PIPE PEN. @ GYP. WALL ASSEMBLY | J1 | 1-1/2" = 1'-0"

CABLE TRAY PENETRATION SEAL THROUGH A GYPSUM WALLBOARD ASSEMBLY – SECTION

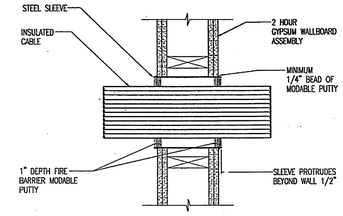

07200-07.DWG

PENETRATION FIRESTOP FOR 3" MAX. DIA. MULTIPLE METAL PIPE THROUGH A GYPSUM WALLBOARD ASSEMBLY

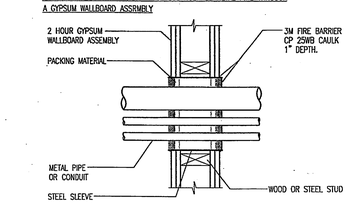

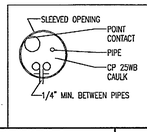

UL SYSTEM #322

07200-03.DWG

E14 | E11 | ROOF & CEILING EXPANSION JOINT | E7

3" = 1'-0"

CABLE PEN. THRU GYP. WALL ASSEMBLY | E4 | 1-1/2" = 1'-0"

MULT. PIPE PEN. @ GYP. WALL ASSEMBLY | E1 | 1-1/2" = 1'-0"

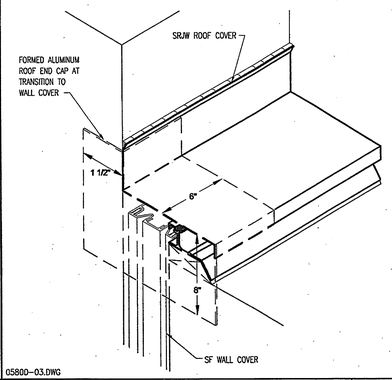

05800-03.DWG

A14 | ROOF/WALL EXPANSION / SEISMIC JOINT | A11

N.T.S.

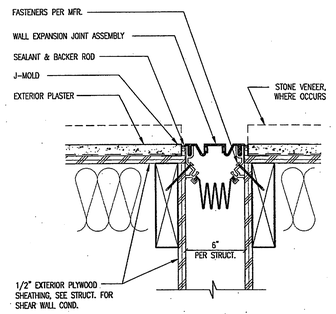

05800-01.DWG

EXT. WALL EXPANSION JOINT | A7

3" = 1'-0"

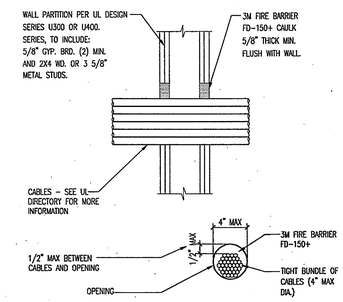

07200-07.DWG

CABLE PEN. THRU GYP. WALL ASSEMBLY | A4 | 1-1/2" = 1'-0"

UL SYSTEM NO. W-L-3148 (1 AND 2 HOUR.)

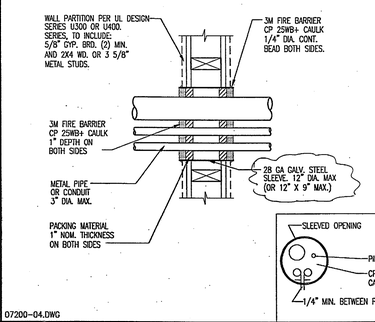

07200-04.DWG

MULT. PIPE OR CONDUIT PENETRATION | A1 | 1-1/2" = 1'-0"

HMC ARCHITECTS
Architecture Interiors Planning
3546 CONCOURS STREET
ONTARIO, CALIFORNIA 91764
Telephone: 909 . 989 . 9979
Fax: 909 . 483 . 1400
www. hmcarchitects .com

AS BUILT

Key Plan

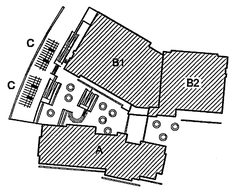

Consultant's Seal

Agency Approval

Project Title

CITY OF RIVERSIDE

ORANGE TERRACE LIBRARY / COMMUNITY CENTER

PLAN CHECK NO. 07-1397

20010 ORANGE TERRACE PARKWAY
RIVERSIDE, CA 92508

HMC ARCHITECTS

No.	Revisions/Submissions	Date:
	Design Development Submittal	12/18/06
	Building Department Submittal	03/29/07
1	Building Department Resubmittal	05/22/07
2	Building Department Resubmittal / QA QC Review	06/22/07

Drawing Title

WALL DETAILS

Architect's Seal

LICENSED ARCHITECT CHRISTOPHER RICHARD TAYLOR NO. C-19759 REN. 02-24-09 STATE OF CALIFORNIA

Designed: SS	Project No. 2340001
Drawn: XL	Scale: AS NOTED
Checked: LP	Drawing No.
Reviewed: RS	A10.5.3
Date: 06-22-07	Sheet of ##

File Name: N:\2005 Jobs\2340 City of Riverside – Diffenbaugh\001-000\18-CAD\Sheets\A10.5.3 WALL DETAILS.dwg Jun 21,2007-12:51pm

PLEASE RECYCLE A10.5.3 WALL DETAILS.DWG

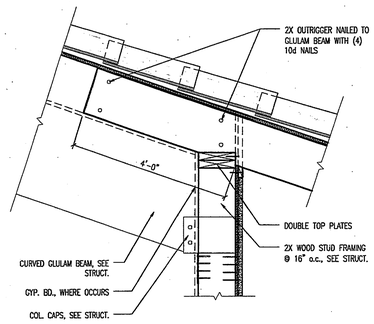

07320-17.DWG

GLULAM BEAM EAVE ENDS DETAIL — N14

1" = 1'-0"

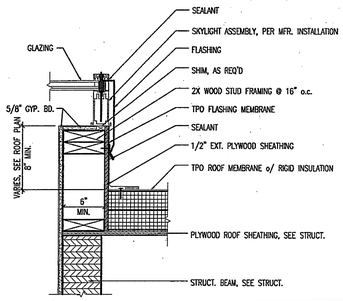

NOTE:
FOR ADDITIONAL INFO. ON TPO ROOF MEMBRANE, SEE SHEET A10.7.3

08630-03.DWG

SKYLIGHT END RAFTER DETAIL — N11

1 1/2" = 1'-0"

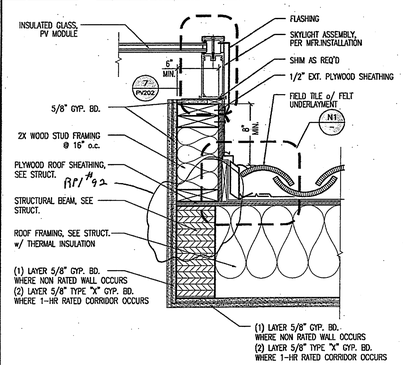

08960-04.DWG

SLOPED SKYLIGHT CURB DETAIL — N7

1 1/2" = 1'-0"

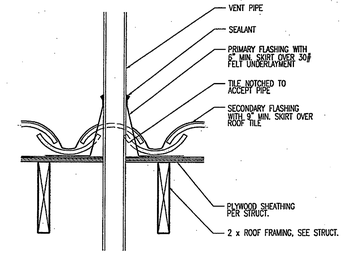

07320-12.DWG

VENT PIPE PENETRATION — N4

1 1/2" = 1'-0"

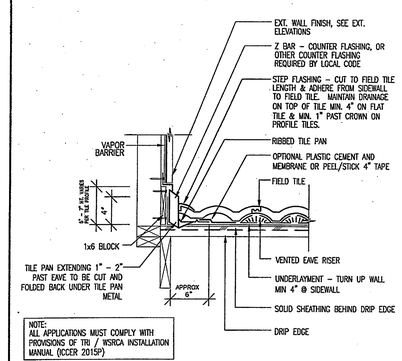

NOTE:
ALL APPLICATIONS MUST COMPLY WITH PROVISIONS OF TRI / WSRCA INSTALLATION MANUAL (ICCER 2015P)

07320-04.DWG

STEP FLASHING @ ROOF-TO-SIDEWALL — N1

1 1/2" = 1'-0"

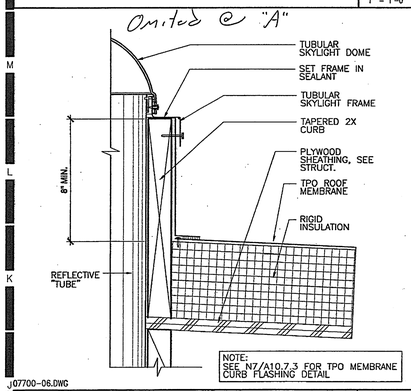

NOTE:
SEE N7/A10.7.3 FOR TPO MEMBRANE CURB FLASHING DETAIL

J07700-06.DWG

TUBULAR SKYLIGHT — J14

3" = 1'-0"

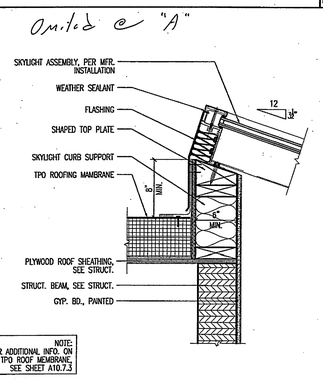

NOTE:
FOR ADDITIONAL INFO. ON TPO ROOF MEMBRANE, SEE SHEET A10.7.3

08630-04.DWG

SLOPED SKYLIGHT HEAD DETAIL — J11

1 1/2" = 1'-0"

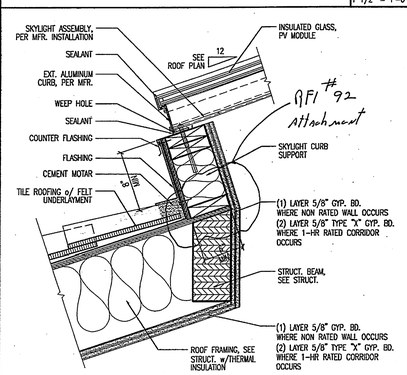

08960-04.DWG

SLOPED SKYLIGHT CURB DETAIL- LOW END — J7

1 1/2" = 1'-0"

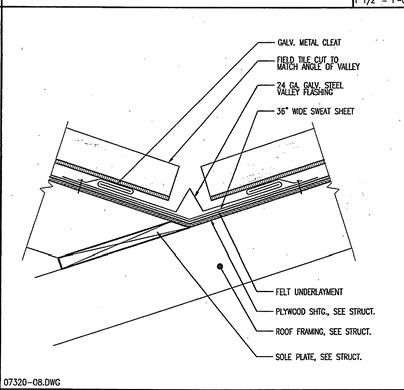

07320-08.DWG

TILE ROOF VALLEY FLASHING — J4

1 1/2" = 1'-0"

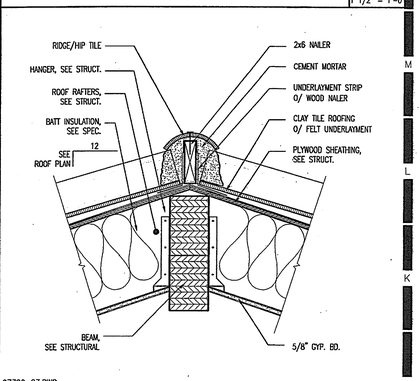

07320-03.DWG

TILE ROOF RIDGE DETAIL — J1

1 1/2" = 1'-0"

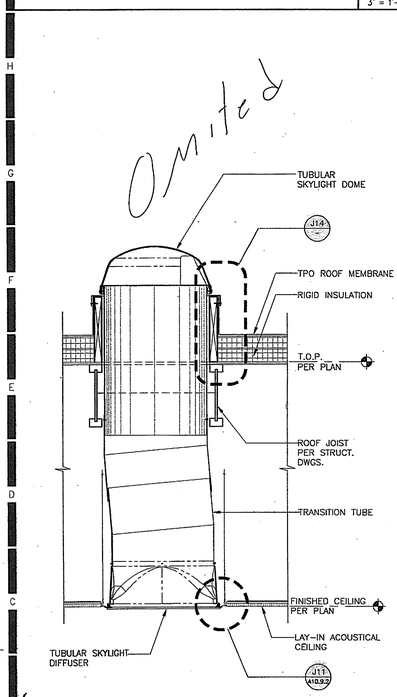

A07700-08.DWG

TYP. TUBULAR SKYLIGHT DETAIL — A14

1" = 1'-0"

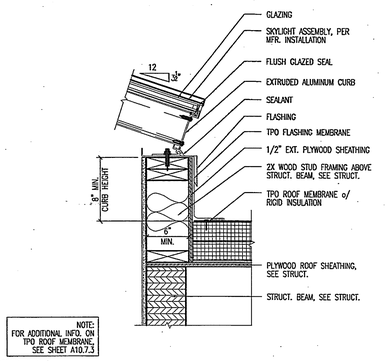

NOTE:
FOR ADDITIONAL INFO. ON TPO ROOF MEMBRANE, SEE SHEET A10.7.3

08630-02.DWG

SKYLIGHT CURB DETAIL — E11

1 1/2" = 1'-0"

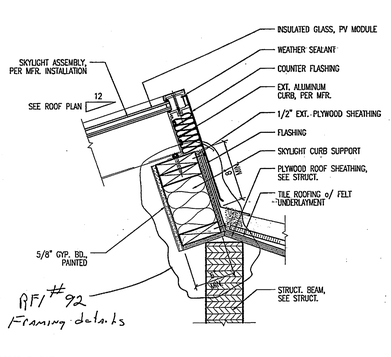

08960-01.DWG

SLOPED SKYLIGHT HEAD DETAIL @ RIDGE — E7

1 1/2" = 1'-0"

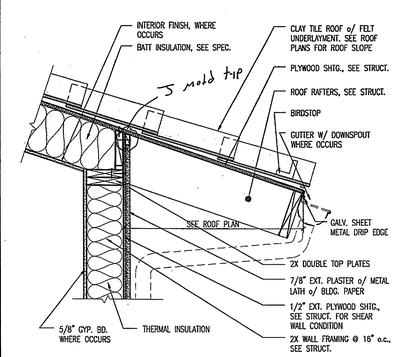

07320-06.DWG

TILE EAVE DETAIL W/ GUTTER — E4

1" = 1'-0"

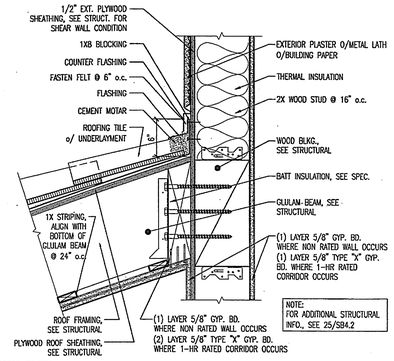

NOTE:
FOR ADDITIONAL STRUCTURAL INFO., SEE 25/S8.2

07320-02.DWG

TILE ROOF FLASHING @ WALL — E1

1 1/2" = 1'-0"

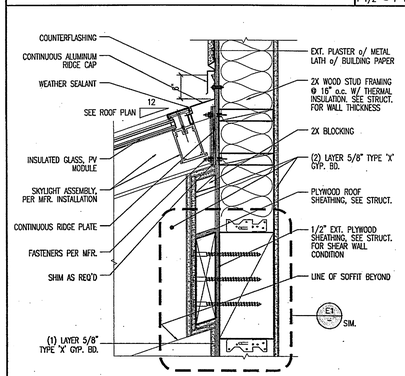

08960-02.DWG

SLOPED SKYLIGHT HEAD DETAIL @ WALL — A11

1 1/2" = 1'-0"

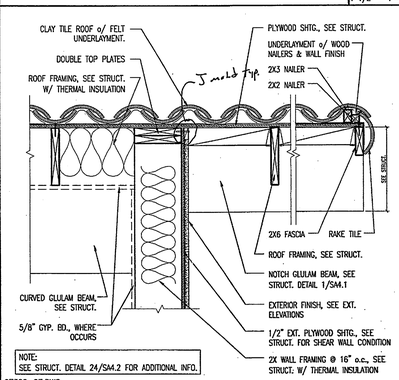

NOTE:
SEE STRUCT. DETAIL 24/SM.2 FOR ADDITIONAL INFO.

07320-07.DWG

RAKE DETAIL — A7

1 1/2" = 1'-0"

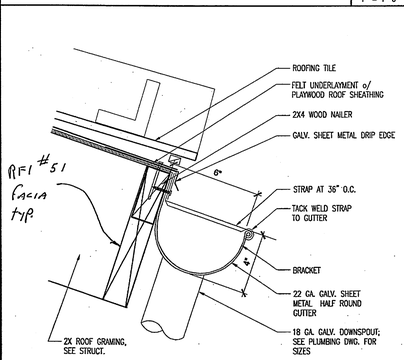

07320-15.DWG

GUTTER AND DOWNSPOUT — A4

3" = 1'-0"

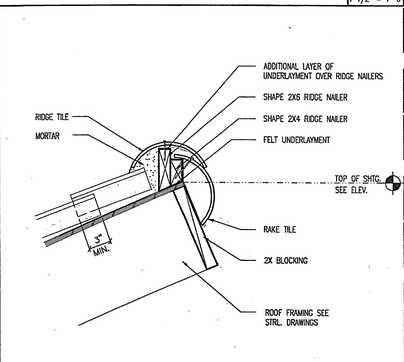

07320-16.DWG

TILE ROOF RIDGE DETAIL — A1

1 1/2" = 1'-0"

HMC ARCHITECTS
Architecture Interiors Planning
3546 CONCOURS STREET
ONTARIO, CALIFORNIA 91764
Telephone: 909 . 989 . 9979
Fax: 909 . 483 . 1400
www. hmcarchitects .com

AS BUILT

Key Plan

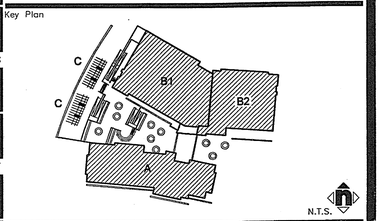

Consultant's Seal

Agency Approval

Project Title

CITY OF RIVERSIDE

ORANGE TERRACE LIBRARY / COMMUNITY CENTER

PLAN CHECK NO. 07-1397

20010 ORANGE TERRACE PARKWAY
RIVERSIDE, CA 92508

HMC ARCHITECTS

No.	Revisions/Submissions	Date:
	Design Development Submittal	12/18/06
	Building Department Submittal	03/29/07
1	Building Department Resubmittal	05/22/07
2	Building Department Resubmittal / QA QC Review	06/22/07

Drawing Title

ROOF DETAILS

Architect's Seal

LICENSED ARCHITECT CHRISTOPHER RICHARD TAYLOR NO. C-19759 REN. 02-24-09 STATE OF CALIFORNIA

Designed: SS	Project No. 2340001
Drawn: XL	Scale: AS NOTED
Checked: LP	Drawing No.
Reviewed: RS	A10.7.2
Date: 06-22-07	Sheet 01 of ##

File Name: N:\2005 Jobs\2340 City of Riverside – Diffenbaugh\001-000\18-CAD\Sheets\A10.7.2 ROOF DETAILS.dwg Jun 21,2007-12:51pm

PLEASE RECYCLE A10.7.2 ROOF DETAILS.DWG

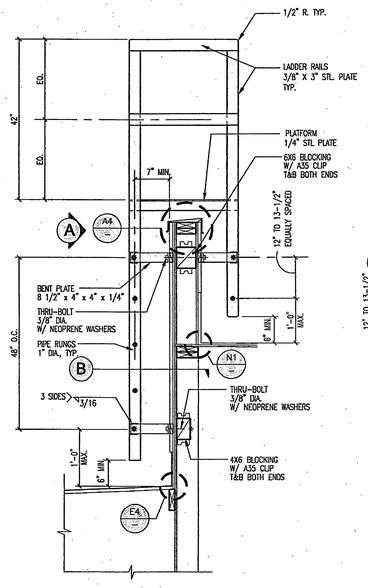

NOTES:
1. ALL EXPOSED SURFACES TO BE GALVANIZED & PAINTED.
2. REFER TO STRUCTURAL FOR PARAPET FRAMING DETAIL.

J07700-03.DWG

ROOF LADDER AT PARAPET — J11

3/4" = 1'-0"

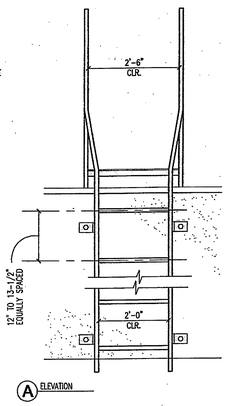

A ELEVATION

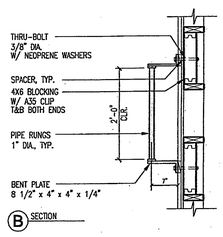

B SECTION

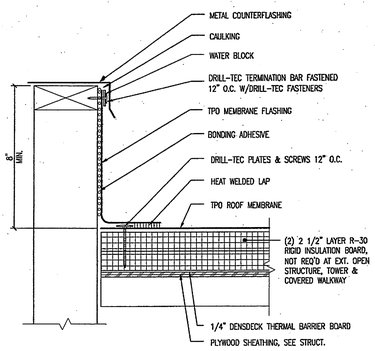

07542-11.DWG

CURB FLASHING W/ COUNTERFLASHING — N7

1 1/2" = 1'-0"

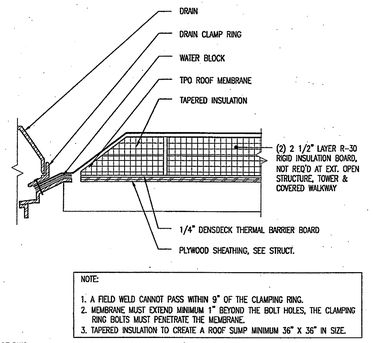

NOTE:
1. A FIELD WELD CANNOT PASS WITHIN 9" OF THE CLAMPING RING.
2. MEMBRANE MUST EXTEND MINIMUM 1" BEYOND THE BOLT HOLES, THE CLAMPING RING BOLTS MUST PENETRATE THE MEMBRANE.
3. TAPERED INSULATION TO CREATE A ROOF SUMP MINIMUM 36" X 36" IN SIZE.

07542-07.DWG

ROOF DRAIN FLASHING — N4

1 1/2" = 1'-0"

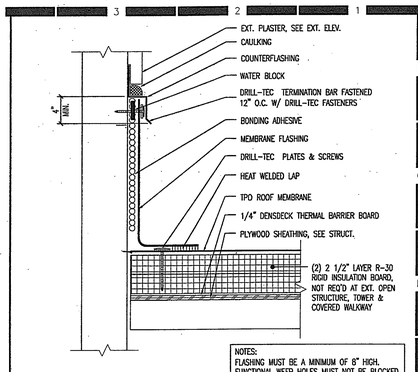

NOTES:
FLASHING MUST BE A MINIMUM OF 8" HIGH.
FUNCTIONAL WEEP HOLES MUST NOT BE BLOCKED.

07542-03.DWG

WALL FLASHING W/ COUNTER FLASHING — N1

1 1/2" = 1'-0"

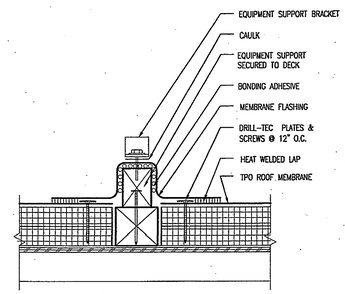

* FOR ADDITIONAL INFO., REFER TO DETAIL A7/-

NOTES:
EQUIPMENT SUPPORT HEIGHT SHOULD BE SUFFICIENT TO ELEVATE THE EQUIPMENT SUPPORT BRACKET ABOVE THE PONDING WATER LEVEL.

07542-10.DWG

CONCEALED WOOD EQUIPMENT SUPPORT — J7

1 1/2" = 1'-0"

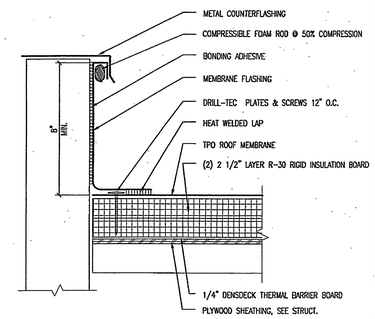

07542-06.DWG

ROOF HATCH CURB FLASHING — J4

1 1/2" = 1'-0"

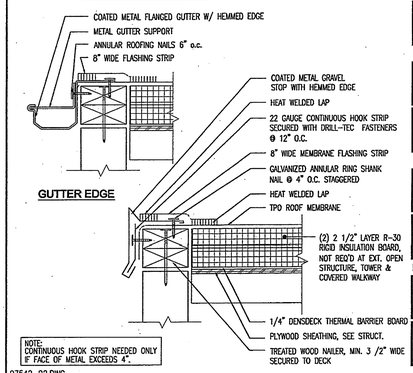

NOTE:
CONTINUOUS HOOK STRIP NEEDED ONLY IF FACE OF METAL EXCEEDS 4".

07542-02.DWG

COATED METAL ROOF EDGE — J1

1 1/2" = 1'-0"

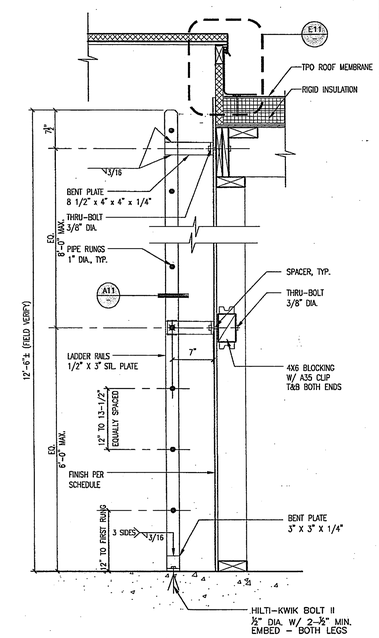

A 07700-01.DWG

ROOF ACCESS LADDER — A14

1" = 1'-0"

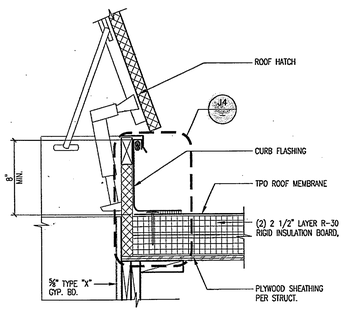

07700-04.DWG

ROOF HATCH DETAIL — E11

1-1/2" = 1'-0"

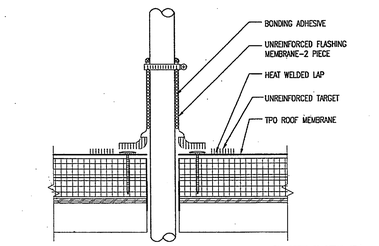

* FOR ADDITIONAL INFO., REFER TO DETAIL A7/-

NOTE:
1. IF BOTTOM LAYER OF UNREINFORCED FLASHING MEMBRANE MUST BE SPLIT TO FIT AROUND STACK, A 6" WIDE FLASHING STRIP MUST BE HEAT WELDED OVER SPLIT.
2. TARGET SIZE SHALL EXTEND 6" OUT PAST THE PENETRATION.

07542-09.DWG

FIELD-WRAPPED PENETRATION FLASHING — E7

1 1/2" = 1'-0"

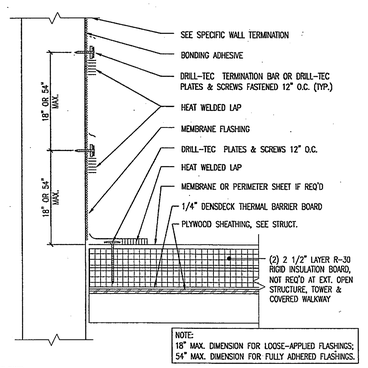

NOTE:
18" MAX. DIMENSION FOR LOOSE-APPLIED FLASHINGS;
54" MAX. DIMENSION FOR FULLY ADHERED FLASHINGS.

07542-05.DWG

HIGH WALL FLASHING — E4

1 1/2" = 1'-0"

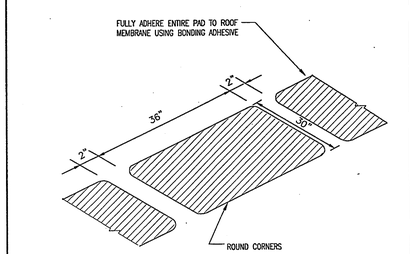

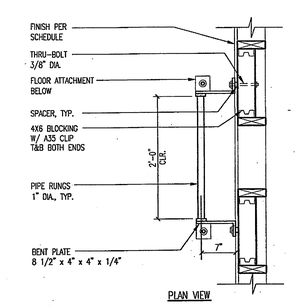

PLAN VIEW

07700-02.DWG

ROOF ACCESS LADDER — A11

1"=1'-0"

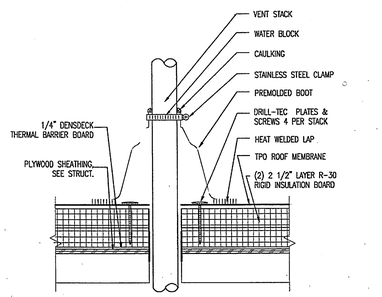

NOTE:
1. DO NOT CUT PREMOLDED BOOT. IT MUST BE PULLED OVER VENT PIPE.
2. PREMOLDED BOOTS ARE AVAILABLE IN SMALL AND LARGE SIZES AND SHOULD BE USED WHENEVER POSSIBLE TO FLASH PIPES 1/2" TO 8" IN DIAMETER.
3. IF A SELF-ADHERED PIPE BOOT IS USED AND THE FLANGE IS INSTALLED OVER A SEAM THEN A TARGET SHEET MUST FIRST BE INSTALLED.

07542-08.DWG

PREMOLDED PENETRATION FLASHING — A7

1 1/2" = 1'-0"

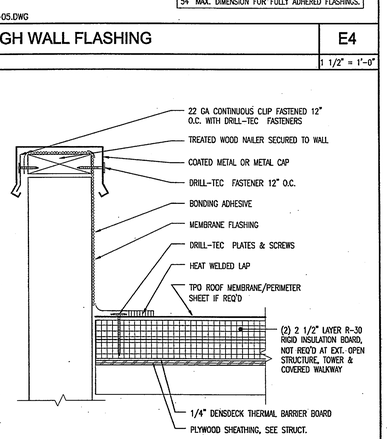

07542-04.DWG

WALL FLASHING W/ COPING — A4

1 1/2" = 1'-0"

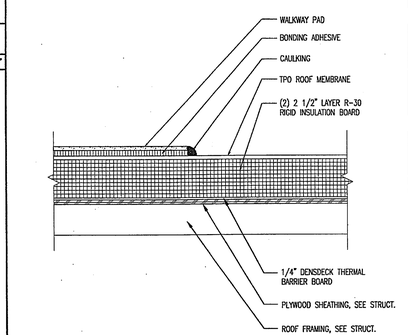

NOTE:
THIS DETAIL IS FOR TPO ONLY AND ALL EDGES OF WALKWAY PAD MUST BE SEALED WITH A HEAVY BEAD OF CAULKING. REMEMBER DO NOT CROSS SEAMS WITH WALKWAY PADS.

07542-01.DWG

ADHERED WALKWAY DETAIL — A1

1 1/2" = 1'-0"

HMC ARCHITECTS
Architecture Interiors Planning
3546 CONCOURS STREET
ONTARIO, CALIFORNIA 91764
Telephone: 909 . 989 . 9979
Fax: 909 . 483 . 1400
www. hmcarchitects .com

AS BUILT

Key Plan

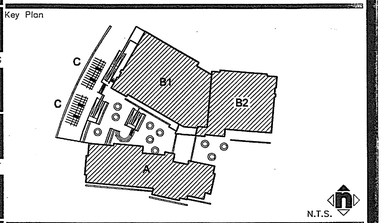

Consultant's Seal

Agency Approval

Project Title

CITY OF RIVERSIDE

ORANGE TERRACE LIBRARY / COMMUNITY CENTER

PLAN CHECK NO. 07-1397

20010 ORANGE TERRACE PARKWAY
RIVERSIDE, CA 92508

HMC ARCHITECTS

No.	Revisions/Submissions	Date:
	Design Development Submittal	12/18/06
	Building Department Submittal	03/29/07
1	Building Department Resubmittal	05/22/07
2	Building Department Resubmittal / QA QC Review	06/22/07

Drawing Title

ROOF DETAILS

Architect's Seal

LICENSED ARCHITECT — CHRISTOPHER A. HIGHLAND — No. C-19759 — REN. 02-24-08 — STATE OF CALIFORNIA

Designed: SS	Project No. 2340001
Drawn: XL	Scale: AS NOTED
Checked: LP	Drawing No. A10.7.3
Reviewed: RS	
Date: 06-22-07	Sheet 01 of ##

File Name: N:\2005 Jobs\2340 City of Riverside - Diffenbaugh\001-000\18-CAD\Sheets\A10.7.3 ROOF DETAILS.dwg Jun 21,2007-12:51pm

PLEASE RECYCLE A10.7.3 ROOF DETAILS.DWG

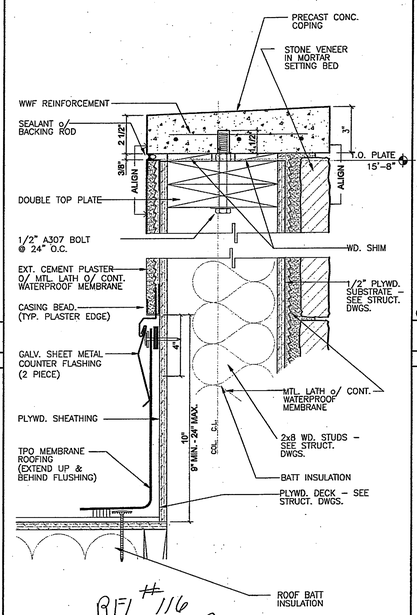

NOTE: FOR ADDITIONAL INFO., SEE DETAIL N1/A10.7.3

07600-01.DWG

PARAPET DETAIL — J8

3" = 1'-0"

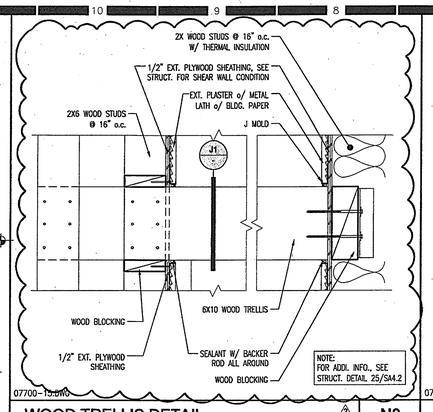

NOTE: FOR ADDIL INFO., SEE STRUCT. DETAIL 25/SA4.2

07700-15.DWG

WOOD TRELLIS DETAIL — N8

1 1/2" = 1'-0"

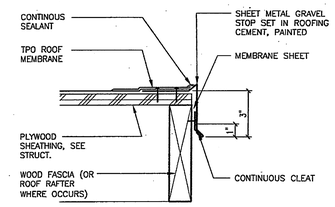

NOTE: FOR ADDITIONAL INFO., SEE DETAIL J1/A10.7.3

07700-09.DWG

EAVE DETAIL — N4

3" = 1'-0"

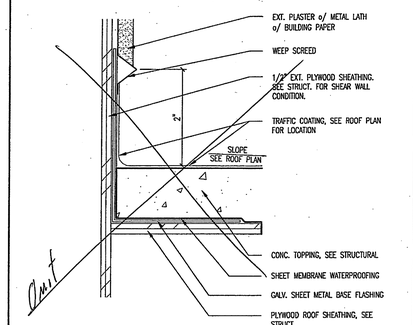

NOTE: DO NOT COVER WEEP HOLES

07700-17.DWG

TOWER CONC. FLOOR TOPPING DETAIL — N1

3" = 1'-0"

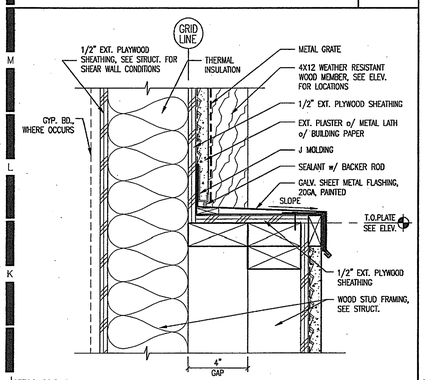

07700-20.DWG

FLASHING DETAIL AT WALL — J14

3" = 1'-0"

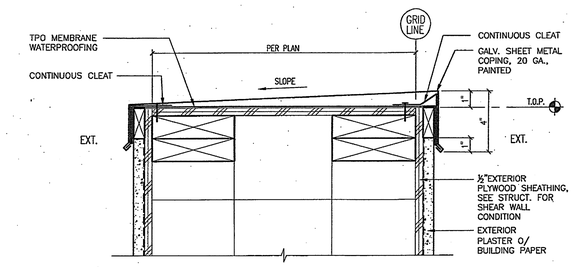

NOTE: FOR ADDITIONAL INFO., SEE DETAIL A4/A10.7.3

07700-13.DWG

COPING @ PARAPET — J4

3" = 1'-0"

NOTES:
1. PROVIDE AT ALL EXPOSED BEAMS AND TRELLIS MEMBERS.
2. ALL SEAMS AND JOINTS SHALL BE MITERED AND SOLDERED.

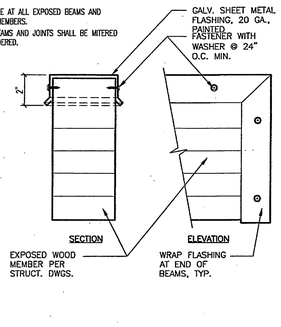

07700-12.DWG

TYP. EXPOSED BEAM FLASHING — J1

3" = 1'-0"

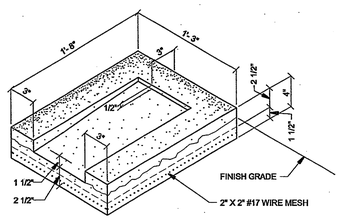

07700-19.DWG

CONCRETE SPLASH BOX — E14

1 1/2" = 1'-0"

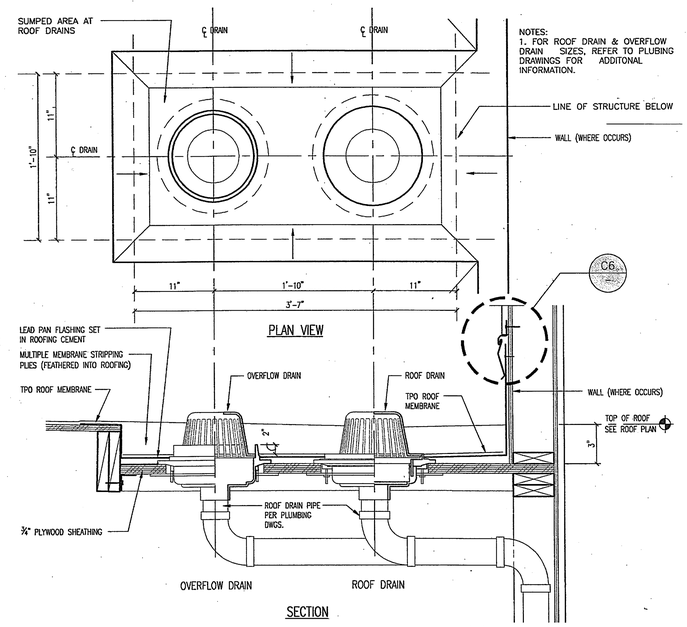

NOTE: FOR ADDITIONAL INFO., SEE DETAIL N4/A10.7.3

07700-11.DWG

ROOF & OVERFLOW DRAIN DETAIL — A8

1 1/2" = 1'-0"

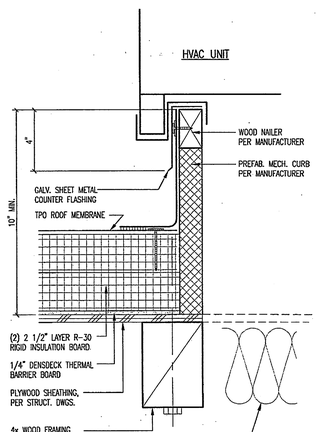

NOTE: FOR ADDITIONAL INFO., SEE DETAIL N7/A10.7.3

07700-10.DWG

MECHANICAL CURB DETAIL — A4

3" = 1'-0"

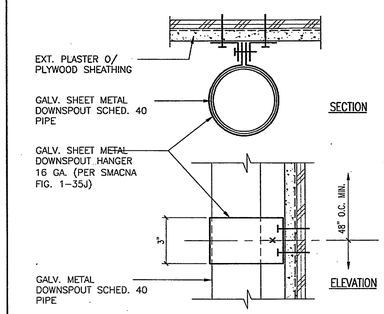

07700-07.DWG

DOWNSPOUT ATTACHMENT — E1

3" = 1'-0"

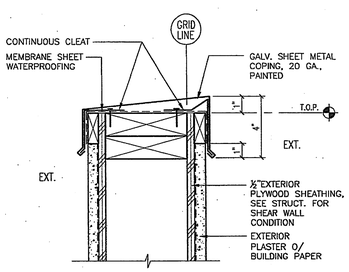

07600-03.DWG

COPING @ PARAPET — A14

3" = 1'-0"

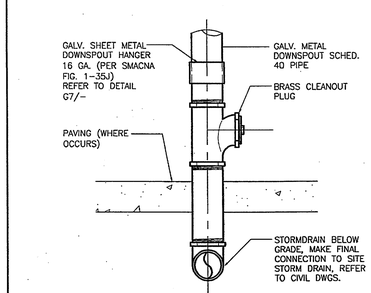

07700-05.DWG

EXTERIOR DOWNSPOUT — A1

1 1/2" = 1'-0"

HMC ARCHITECTS
Architecture Interiors Planning
3546 CONCOURS STREET
ONTARIO, CALIFORNIA 91764
Telephone: 909 . 989 . 9979
Fax: 909 . 483 . 1400
www. hmcarchitects .com

AS BUILT

Key Plan

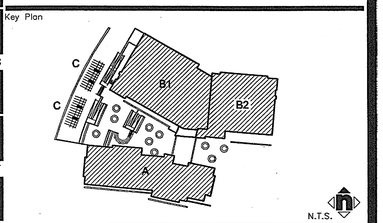

Consultant's Seal

Agency Approval

Project Title

CITY OF RIVERSIDE

ORANGE TERRACE LIBRARY / COMMUNITY CENTER

PLAN CHECK NO. 07-1397

20010 ORANGE TERRACE PARKWAY
RIVERSIDE, CA 92508

SM HMC ARCHITECTS

No.	Revisions/Submissions	Date:
	Design Development Submittal	12/18/06
	Building Department Submittal	03/29/07
1	Building Department Resubmittal	05/22/07
2	Building Department Resubmittal / QA QC Review	06/22/07

Drawing Title

ROOF DETAILS

Architect's Seal

LICENSED ARCHITECT CHRISTOPHER R. CHADBOURNE TAYLOR LICENSE NO. C-19759 REN. 02-24-09 STATE OF CALIFORNIA

Designed: SS	Project No. 2340001
Drawn: XL	Scale: AS NOTED
Checked: LP	Drawing No.
Reviewed: RS	A10.7.4
Date: 06-22-07	Sheet of ##

File Name: \\ont-e2\projects\2005 Jobs\2340 City of Riverside - Diffenbaugh\001-000\18-CAD\Sheets\A10.7.4 ROOF DETAILS.dwg Jun 21,2007-5:19pm

PLEASE RECYCLE A10.7.4 ROOF DETAILS.DWG

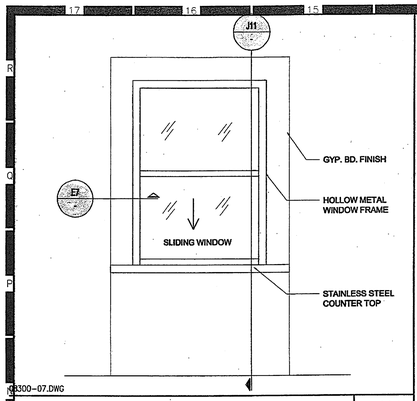

CONCESSION STAND WINDOW	N14
ONE-HOUR CORRIDOR SIDE	3/4" = 1'-0"

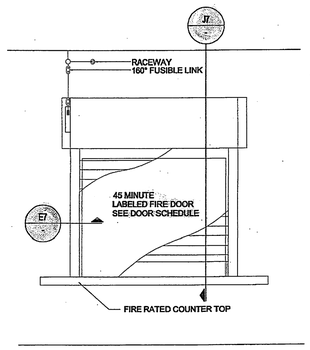

COUNTER FIRE DOOR - ELEVATION	J14
CONCESSION ROOM SIDE	3/4" = 1'-0"

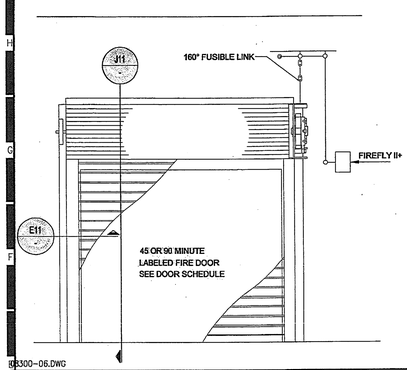

OVERHEAD FIRE DOOR - ELEVATION	E14
	3/4" = 1'-0"

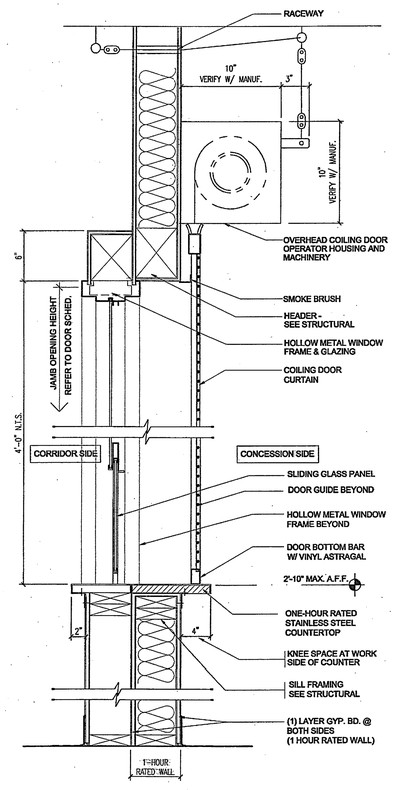

OVERHEAD COUNTER FIRE DOOR	J11
SERVING WINDOW @ ONE-HOUR RATED WALL (CONCESSION ROOM B113)	1-1/2" = 1'-0"

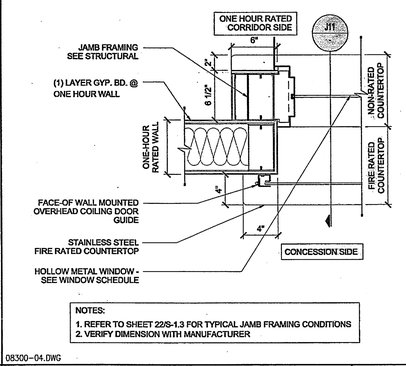

OVERHEAD COUNTER FIRE DOOR - JAMB	E11
CONCESSION STAND WINDOW AT ONE HOUR RATED WALL	1-1/2" = 1'-0"

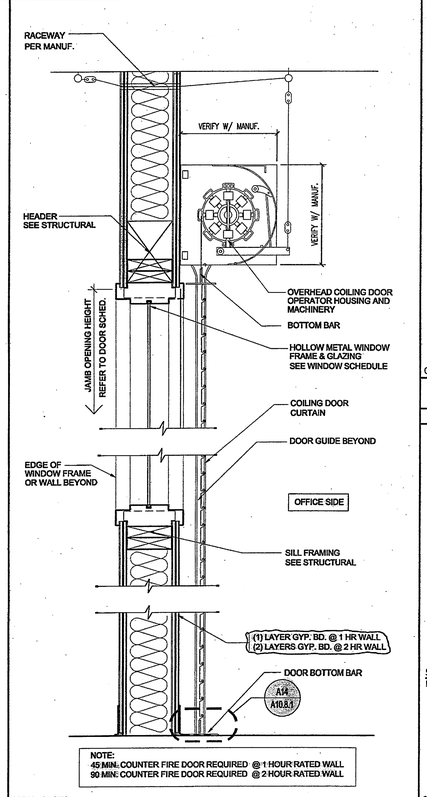

OVERHEAD FIRE DOOR	J7
	1-1/2" = 1'-0"

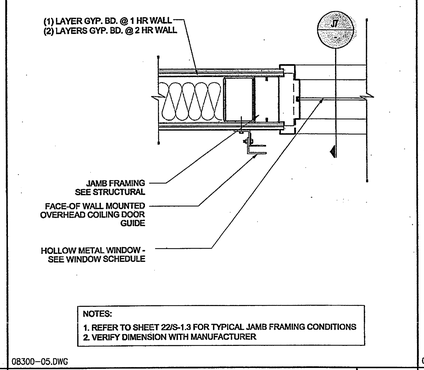

OVERHEAD FIRE DOOR - JAMB	E7
	1-1/2" = 1'-0"

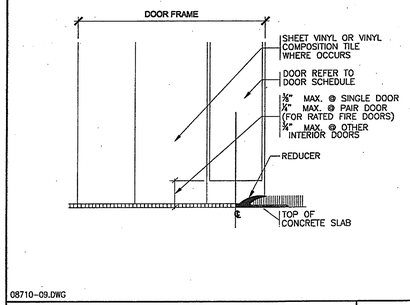

DOOR SILL -CARPET / VCT	N4
	3" = 1'-0"

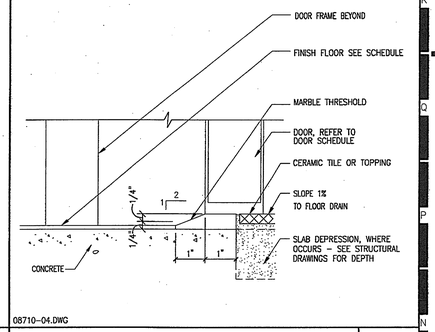

DOOR SILL - CONCRETE / CERAMIC TILE	N1
	HALF

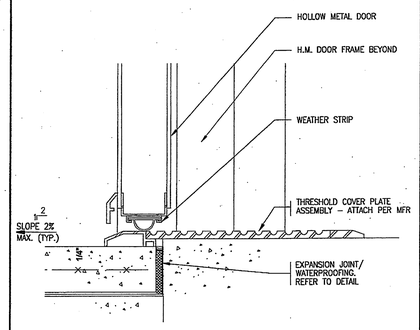

EXTERIOR HOLLOW METAL DOOR SILL	J4
	HALF

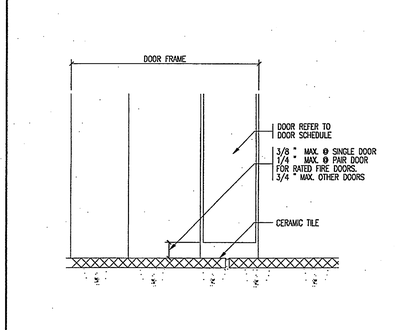

DOOR SILL - TILE / TILE	J1
	HALF

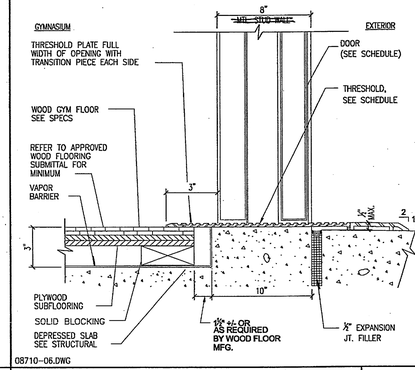

EXTERIOR HOLLOW METAL DOOR SILL	J4
	HALF

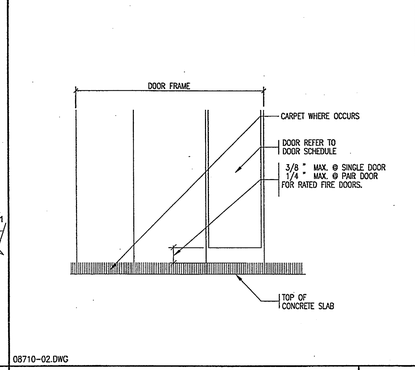

DOOR SILL - CARPET / CARPET	E1
	HALF

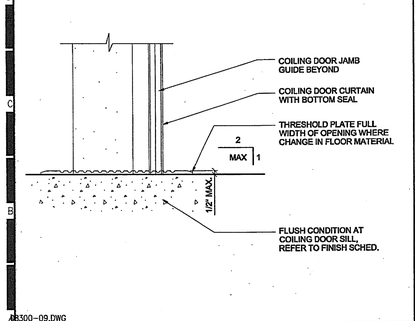

OVERHEAD FIRE DOOR - FLUSH SILL	A14
	1-1/2" = 1'-0"

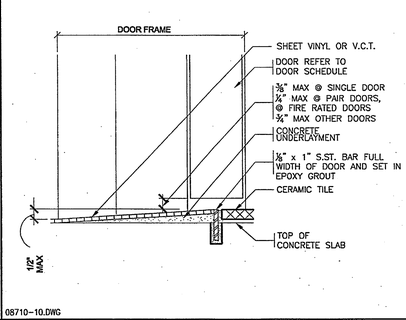

DOOR SILL -VINYL OR VCT / TILE	A11
	3" = 1'-0"

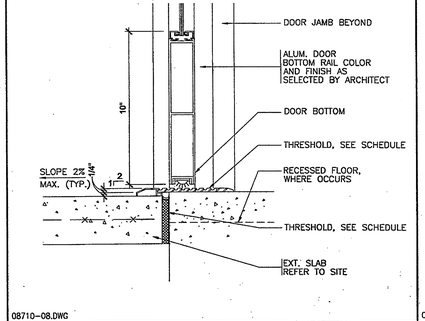

ALUMINUM STOREFRONT DOOR SILL	A7
	3" = 1'-0"

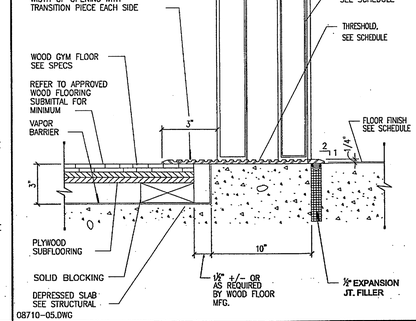

DOOR SILL @ LOBBY	A4
	3" = 1'-0"

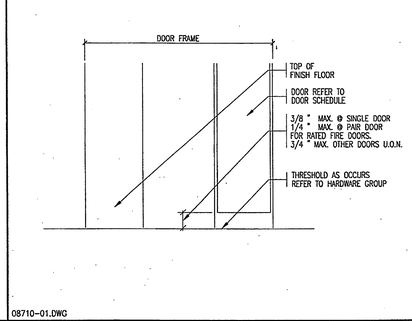

DOOR SILL - CONCRETE / CONCRETE	A1
	HALF

HMC ARCHITECTS
Architecture Interiors Planning
3546 CONCOURS STREET
ONTARIO, CALIFORNIA 91764
Telephone: 909 . 989 . 9979
Fax: 909 . 483 . 1400
www. hmcarchitects .com

AS BUILT

Key Plan

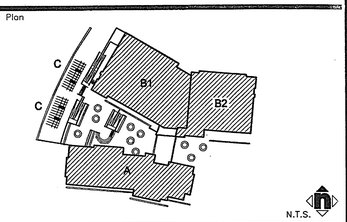

Consultant's Seal

Agency Approval

Project Title

CITY OF RIVERSIDE

ORANGE TERRACE LIBRARY / COMMUNITY CENTER

PLAN CHECK NO. 07-1397

20010 ORANGE TERRACE PARKWAY
RIVERSIDE, CA 92508

HMC ARCHITECTS

No.	Revisions/Submissions	Date:
	Design Development Submittal	12/18/06
	Building Department Submittal	03/29/07
1	Building Department Resubmittal	05/22/07
2	Building Department Resubmittal / QA QC Review	06/22/07

Drawing Title

DOOR AND WINDOW DETAILS

Architect's Seal

LICENSED ARCHITECT CHRISTOPHER PAUL LAYLOR NO. C-19759 REN. 02-24-09 STATE OF CALIFORNIA

Designed: SS	Project No. 2340001
Drawn: XL	Scale: AS NOTED
Checked: LP	Drawing No.
Reviewed: RS	A10.8.1
Date: 06-22-07	Sheet of ##

File Name: N:\2005 Jobs\2340 City of Riverside - Diffenbaugh\001-000\18-CAD\Sheets\A10.8.1 DOOR THRESHOLD DETAILS.dwg Jun 21,2007-12:50pm

PLEASE RECYCLE A10.8.1 DOOR THRESHOLD DETAILS.DWG

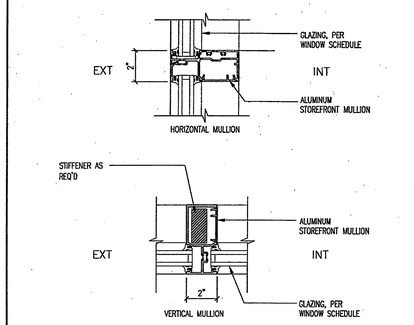

08400-12.DWG

ALUM. STOREFRONT MULLION	N11
	3" = 1'-0"

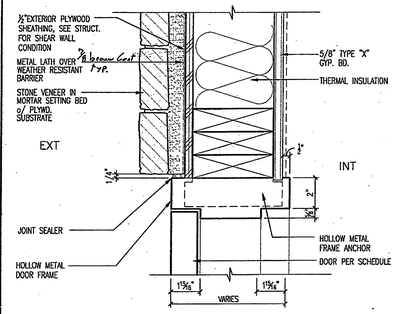

08110-09.DWG

STL. FRAME DOOR JAMB AT STONE VENEER	N7
	3" = 1'-0"

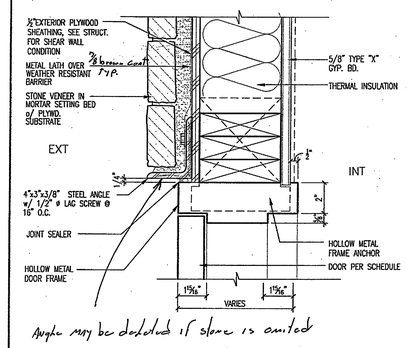

08110-08.DWG

STL. FRAME DOOR HEAD AT STONE VENEER	N4
	3" = 1'-0"

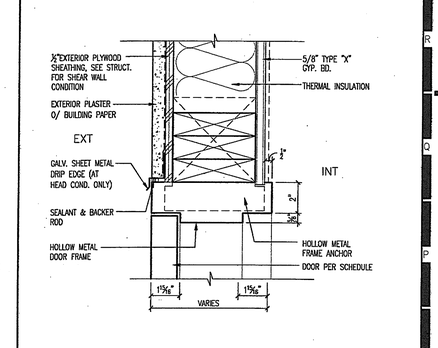

08101-01.DWG

EXTERIOR H.M. DOOR HEAD/JAMB	N1
	3" = 1'-0"

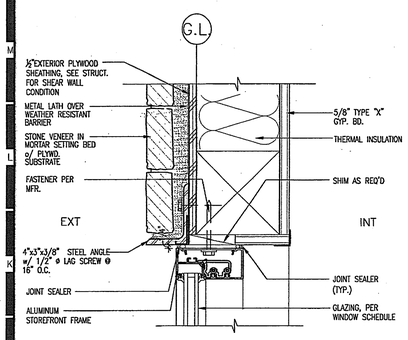

08400-04.DWG

ALUM. FRAME HEAD AT STONE VENEER	J14
	3" = 1'-0"

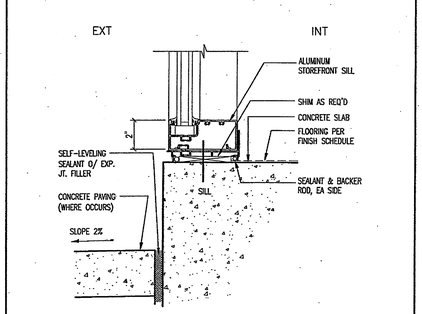

08400-11.DWG

ALUM. STOREFRONT SILL	J11
	3" = 1'-0"

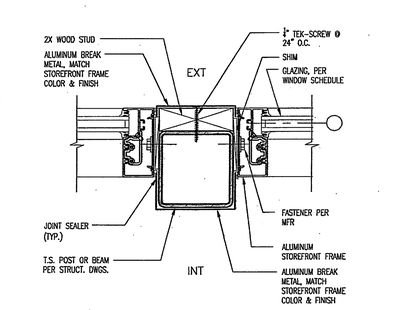

HEAD/SILL CONDITION SIMILAR

08400-08.DWG

ALUM. STOREFRONT JAMB	J7
	3" = 1'-0"

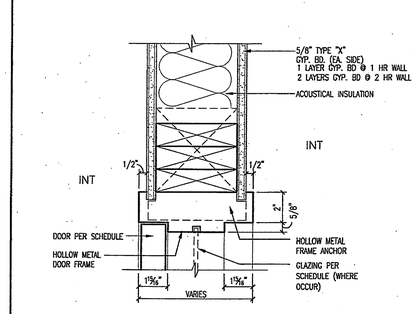

08110-02.DWG

INTERIOR H.M. DOOR HEAD/JAMB	J4
	3" = 1'-0"

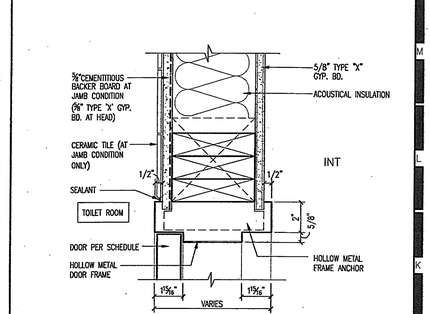

08110-06.DWG

H.M. DOOR HEAD/JAMB AT TILE	J1
	3" = 1'-0"

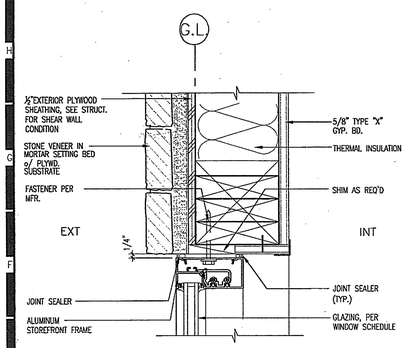

08400-05.DWG

ALUM. FRAME JAMB AT STONE VENEER	E14
	3" = 1'-0"

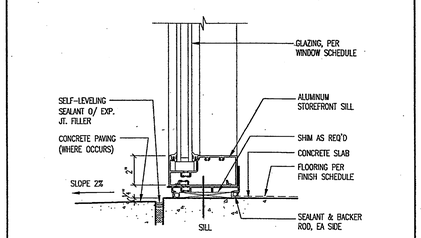

08400-03.DWG

ALUM. STOREFRONT SILL	E11
	3" = 1'-0"

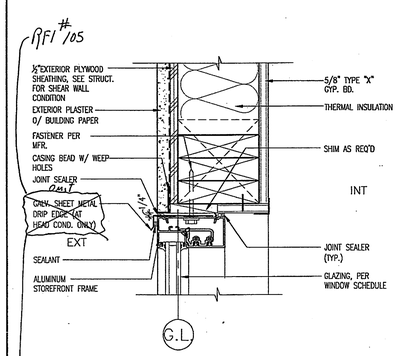

08400-02.DWG

ALUM. FRAME HEAD/JAMB AT EXT. PLASTER	E7
	3" = 1'-0"

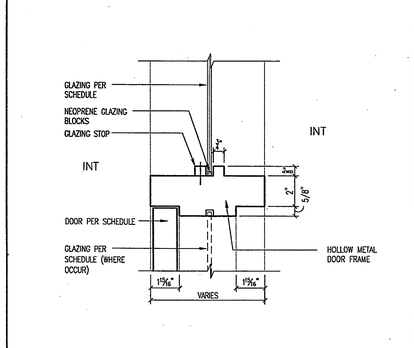

08110-03.DWG

H.M. DOOR HEAD/JAMB	E4
	3" = 1'-0"

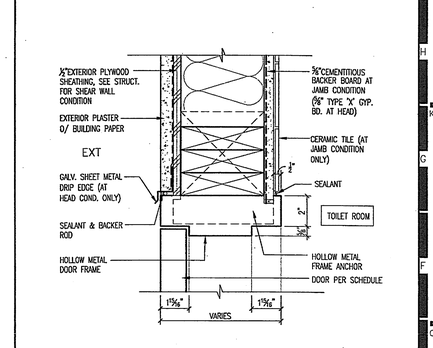

08110-07.DWG

H.M. DOOR HEAD/JAMB AT TILE	E1
	3" = 1'-0"

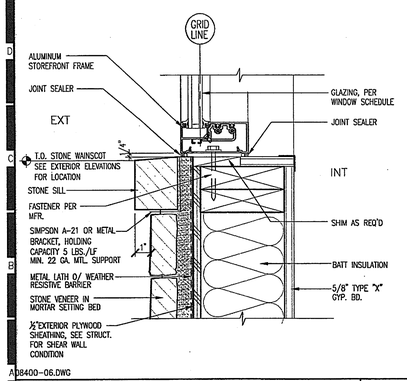

08400-06.DWG

ALUM. FRAME SILL AT STONE VENEER	A14
	3" = 1'-0"

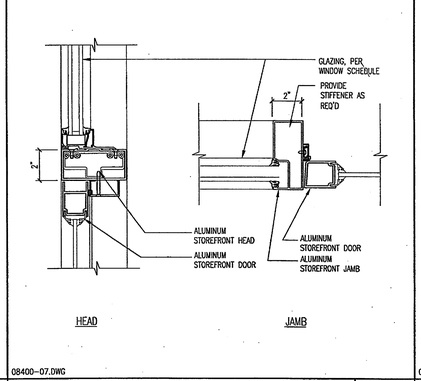

08400-07.DWG

STOREFRONT DOOR HEAD / JAMB	A11
	3" = 1'-0"

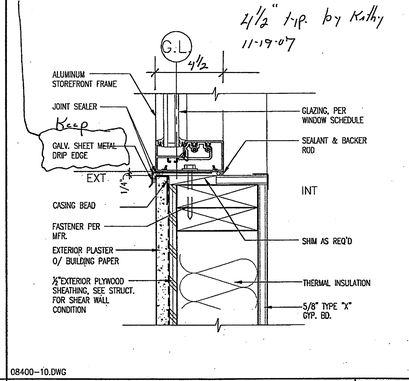

08400-10.DWG

ALUM. STOREFRONT SILL	A7
	3" = 1'-0"

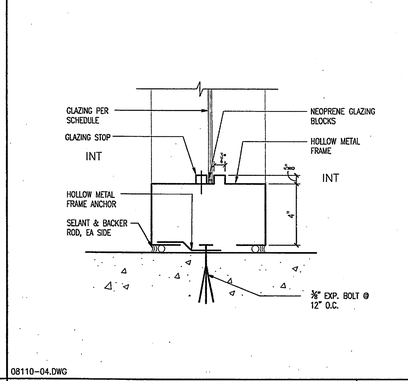

08110-04.DWG

H.M. STOREFRONT SILL	A4
	3" = 1'-0"

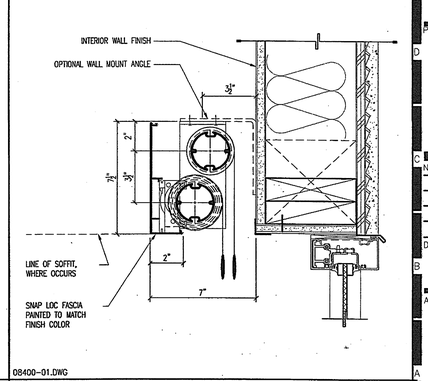

08400-01.DWG

MOTORIZED WINDOW TREATMENT	A1
	3" = 1'-0"

HMC ARCHITECTS
Architecture Interiors Planning
3546 CONCOURS STREET
ONTARIO, CALIFORNIA 91764
Telephone: 909 . 989 . 9979
Fax: 909 . 483 . 1400
www. hmcarchitects .com

AS BUILT

Key Plan

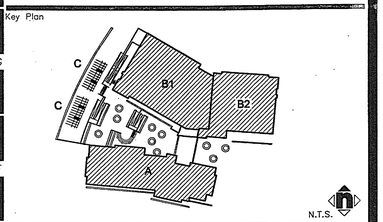

Consultant's Seal

Agency Approval

Project Title

CITY OF RIVERSIDE

ORANGE TERRACE LIBRARY / COMMUNITY CENTER

PLAN CHECK NO. 07-1397

20010 ORANGE TERRACE PARKWAY
RIVERSIDE, CA 92508

SMHMC ARCHITECTS

No.	Revisions/Submissions	Date:
	Design Development Submittal	12/18/06
	Building Department Submittal	03/29/07
1	Building Department Resubmittal	05/22/07
2	Building Department Resubmittal / QA QC Review	06/22/07

Drawing Title

DOOR AND WINDOW DETAILS

Architect's Seal

LICENSED ARCHITECT CHRISTOPHER A. HAYES TAYLOR CAL. NO. C-19259 REN. 02-31-09 STATE OF CALIFORNIA

Designed: SS	Project No. 2340001
Drawn: MM	Scale: AS NOTED
Checked: LP	Drawing No.
Reviewed: RS	A10.8.2
Date: 06-22-07	Sheet of #

File Name: N:\2005 Jobs\2340 City of Riverside - Diffenbaugh\001-000\18-CAD\Sheets\A10.8.2 WINDOW DETAILS.dwg Jun 21,2007-12:50pm

PLEASE RECYCLE A10.8.2 WINDOW DETAILS.DWG

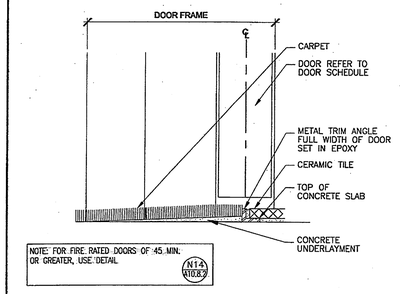

08710-12.DWG

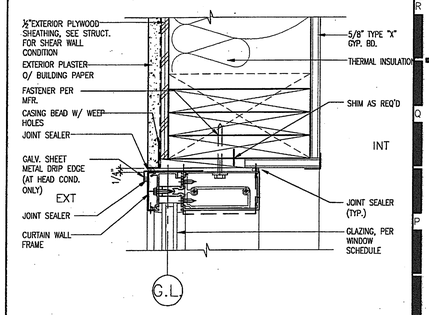

08400-15.DWG

	N14		N11		N7	DOOR SILL - CARPET / CERAMIC TILE	N4	CURTAIN WALL HEAD/JAMB AT EXT. PLASTER	N1
							6" = 1'-0"		3" = 1'-0"

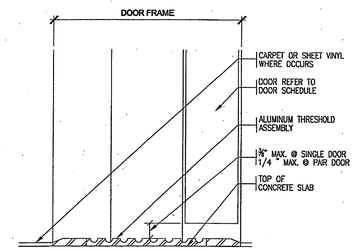

08710-11.DWG

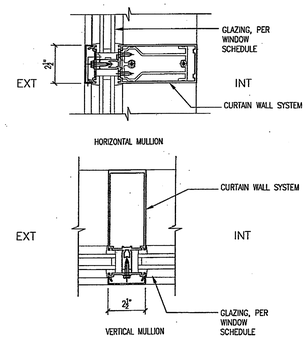

08400-14.DWG

	J14		J11		J7	DOOR SILL -RATED 45 MINUTES AND ABOVE	J4	CURTAIN WALL MULLION	J1
							6" = 1'-0"		3" = 1'-0"

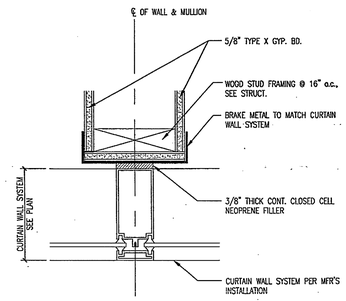

08400-21.DWG

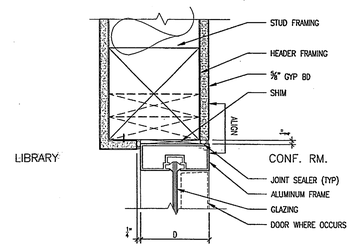

08400-17.DWG

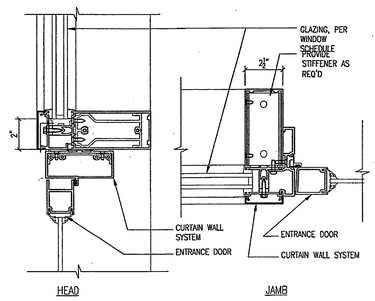

08400-13.DWG

	E14		E11	INTERIOR PARTITION AT WINDOW	E7	ALUM. FRAME HEAD/JAMB AT INT. WALL	E4	CURTAIN WALL DOOR HEAD / JAMB	E1
					3" = 1'-0"		3" = 1'-0"		3" = 1'-0"

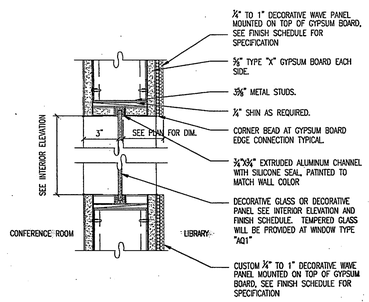

08400-19.DWG

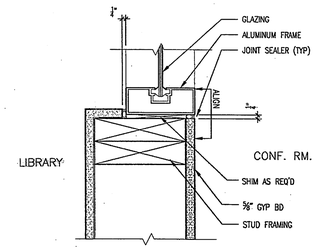

08400-17.DWG

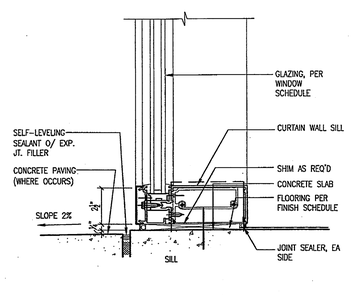

08400-15.DWG

	A14		A11	FRAMELESS WINDOW DETAIL	A7	ALUM. FRAME SILL AT INT. WALL	A4	CURTAIN WALL SILL	A1
					3" = 1'-0"		3" = 1'-0"		3" = 1'-0"

HMC ARCHITECTS
Architecture Interiors Planning
3546 CONCOURS STREET
ONTARIO, CALIFORNIA 91764
Telephone: 909 . 989 . 9979
Fax: 909 . 483 . 1400
www. hmcarchitects .com

AS BUILT

Key Plan

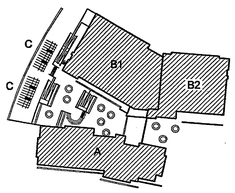

Consultant's Seal

Agency Approval

Project Title

CITY OF RIVERSIDE

ORANGE TERRACE LIBRARY / COMMUNITY CENTER
PLAN CHECK NO. 07-1397

20010 ORANGE TERRACE PARKWAY
RIVERSIDE, CA 92508

HMC ARCHITECTS

No.	Revisions/Submissions	Date:
	Design Development Submittal	12/18/06
	Building Department Submittal	03/29/07
1	Building Department Resubmittal	05/22/07
2	Building Department Resubmittal / QA QC Review	06/22/07

Drawing Title **DOOR AND WINDOW DETAILS**

Architect's Seal

LICENSED ARCHITECT CHRISTOPHER RICHARD TAYLOR NO. C-18759 REV. 02-24-09 STATE OF CALIFORNIA

Designed: SS		Project No. 2340001	
Drawn: MM		Scale: AS NOTED	
Checked: LP		Drawing No. A10.8.3	
Reviewed: RS			
Date: 06-22-07		Sheet	of #

File Name: N:\2005 Jobs\2340 City of Riverside - Dilfenbaugh\001-000\18-CAD\Sheets\A10.8.3 DOOR & WINDOW DETAILS.dwg Jun 21,2007-12:50pm

PLEASE RECYCLE A10.8.3 DOOR & WINDOW DETAILS.DWG

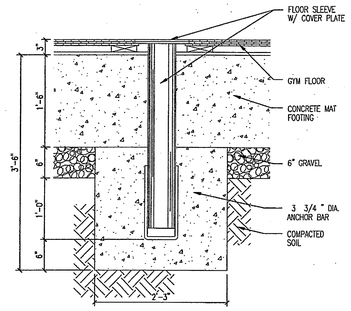

091-001.DWG

N11	TYPICAL SLEEVE IN WOOD FLOOR	N7
		1"=1'-0"

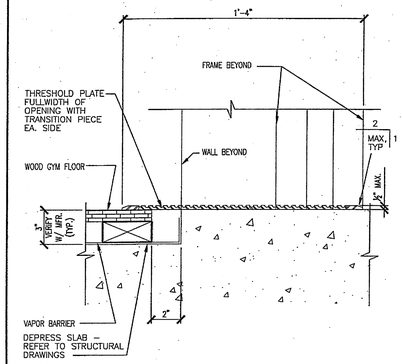

096-001.DWG

N4	GYMNASIUM FLOOR AT INTERIOR DOOR	N1
	3"=1'-0"	HALF

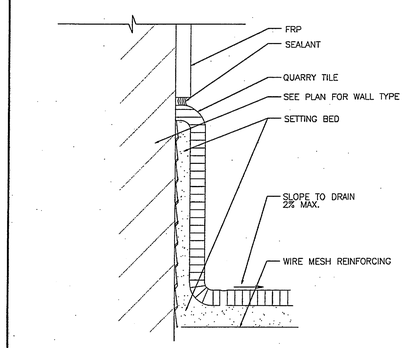

093-001.DWG

	QUARRY TILE BASE	

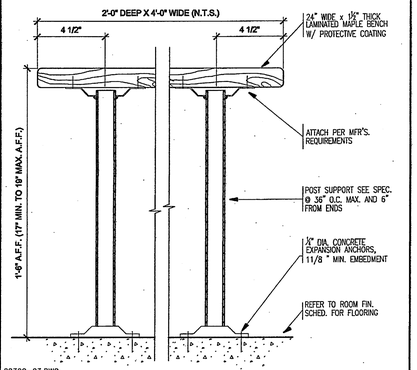

09300-03.DWG

J14	ACCESSIBLE LOCKER ROOM BENCH	J11
		3" = 1'-0"

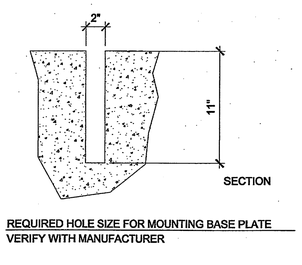

REQUIRED HOLE SIZE FOR MOUNTING BASE PLATE
VERIFY WITH MANUFACTURER

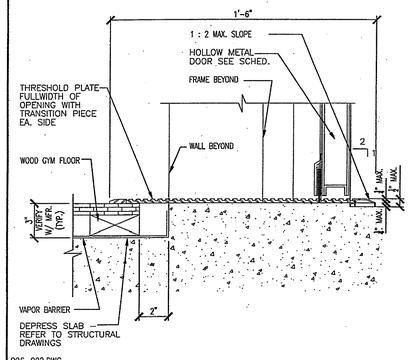

096-002.DWG

J4	GYMNASIUM FLOOR AT EXTERIOR DOOR	J1
	3"=1'-0"	3"=1'-0"

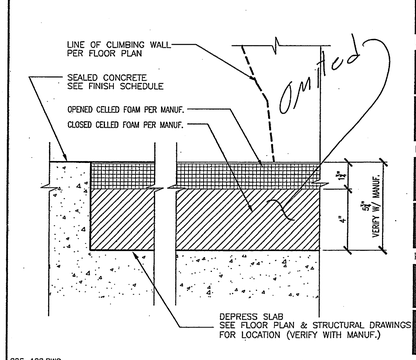

096-100.DWG

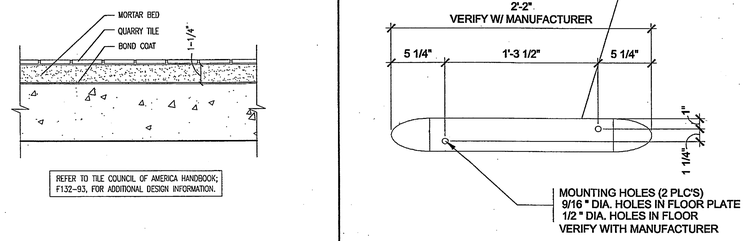

091-021.DWG

E11	BOOK THEFT DETECTION SYSTEM	E7
3" = 1'-0"	MOUNTING REQUIREMENTS	1/2" = 1'-0"

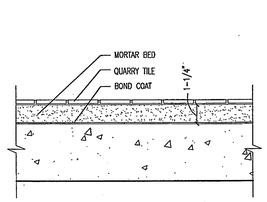

REFER TO TILE COUNCIL OF AMERICA HANDBOOK; F132-93, FOR ADDITIONAL DESIGN INFORMATION.

09300-01.DWG

E14	QUARRY TILE FLOOR ASSEMBLY	E11
		3" = 1'-0"

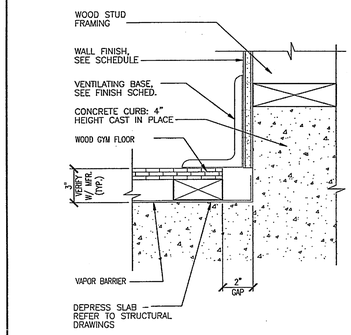

096-003.DWG

E4	GYMNASIUM FLOOR AT WALL	E1
	3"=1'-0"	N.T.S.

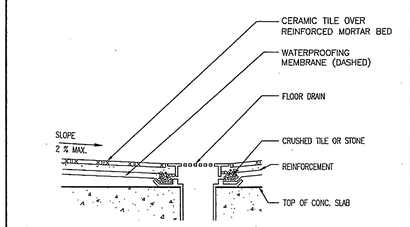

093-003.DWG

	FLOOR DRAIN AT CERAMIC TILE FLOOR	

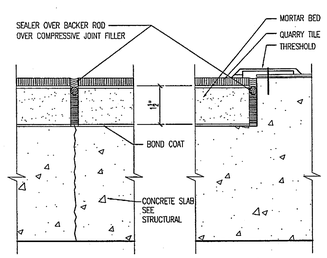

REFER TO TILE COUNCIL OF AMERICA HANDBOOK; EJ171-93 FOR ADDITIONAL DESIGN INFORMATION.

09300-02.DWG

A14	QUARRY TILE CONTROL JOINT	A11
		6" = 1'-0"

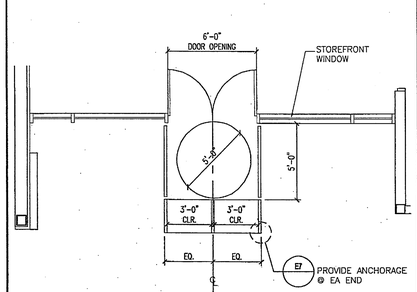

091-22.DWG

A7	BOOK THEFT DETECTION SYSTEM	
1/4"=1'-0"	LIBRARY MAIN ENTRANCE	

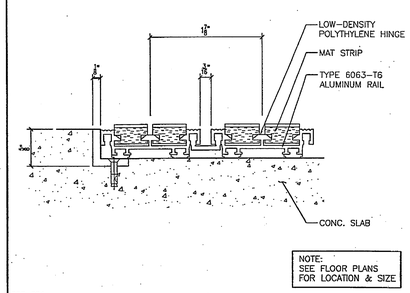

096-004

A4	ALUMINUM GRATE SYSTEM @ BUILDING MAIN ENTRY	
FULL		

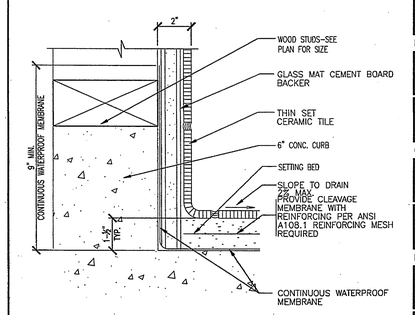

093-004.DWG

A1	CERAMIC TILE BASE	
N.T.S.		

HMC ARCHITECTS
Architecture Interiors Planning
3546 CONCOURS STREET
ONTARIO, CALIFORNIA 91764
Telephone: 909 . 989 . 9979
Fax: 909 . 483 . 1400
www. hmcarchitects .com

AS BUILT

Key Plan

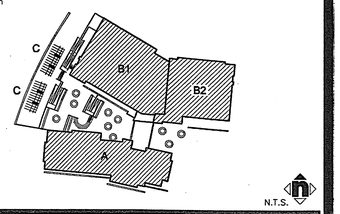

Consultant's Seal

Agency Approval

Project Title

ORANGE TERRACE LIBRARY / COMMUNITY CENTER
PLAN CHECK NO. 07-1397

20010 ORANGE TERRACE PARKWAY
RIVERSIDE, CA 92508

HMC ARCHITECTS

No.	Revisions/Submissions	Date:
	Design Development Submittal	12/18/06
	Building Department Submittal	03/29/07
1	Building Department Resubmittal	05/22/07
2	Building Department Resubmittal / QA QC Review	06/22/07

Drawing Title

FLOOR DETAILS

Architect's Seal

LICENSED ARCHITECT CHRISTOPHER BUCKLEY NAYLOR NO. C-19759 REN. 02-24-09 STATE OF CALIFORNIA

Designed: SS	Project No.	2340001
Drawn: XL	Scale:	AS NOTED
Checked: LP	Drawing No.	A10.9.1
Reviewed: RS		
Date: 06-22-07	Sheet 01 of ##	

File Name: N:\2005 Jobs\2340 City of Riverside – Diffenbaugh\001-000\18-CAD\Sheets\A10.9.1 FLOOR DETAILS.dwg Jun 21,2007-12:50pm

PLEASE RECYCLE A10.9.1 FLOOR DETAILS.DWG

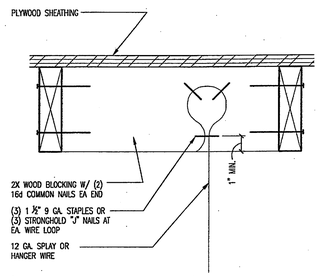

09500-06.DWG

HANGER WIRE (SPLAY WIRE SIM.) — N14

3"=1'-0"

NOTE:
FOR ADDITIONAL INFORMATION, REFER TO 20/S1.4

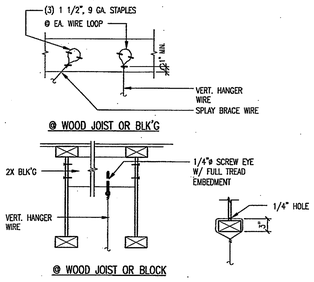

09500-07.DWG

TYPICAL HANGER WIRE ATTACHMENTS — N7

N.T.S.

THE TOTAL WEIGHT OF THE CEILING SYSTEM, INCLUDING AIR CONDITIONING GRILLES AND LIGHT FIXTURES, SHALL NOT EXCEED FOUR (4) POUNDS PER SQUARE FOOT. INSTALLATION SHALL COMPLY WITH D.S.A. I.R. M-3 AND THE FOLLOWING:

(1) 12 GAUGE MINIMUM HANGER WIRES MAY BE USED FOR UP TO AND INCLUDING 4'-0" X 4'-0" GRID SPACING AND SHALL BE ATTACHED TO MAIN RUNNERS.

(2) PROVIDE 12 GAUGE HANGER WIRES AT THE ENDS OF ALL MAIN AND CROSS RUNNERS WITHIN 8" OF THE SUPPORT OR WITHIN 1/4 OF THE LENGTH OF THE END TEE, WHICHEVER IS LEAST, FOR THE PERIMETER OF THE CEILING AREA.

(3) PROVIDE TRAPEZE OR OTHER SUPPLEMENTARY SUPPORT MEMBERS AT OBSTRUCTIONS TO TYPICAL HANGER SPACING. PROVIDE ADDITIONAL HANGERS, STRUTS OR BRACES AS REQUIRED AT ALL CEILING BREAKS, SOFFITS OR DISCONTINUOUS AREAS. HANGER WIRES THAT ARE MORE THAN 1 IN 6 OUT OF PLUMB ARE TO HAVE COUNTER-SLOPING WIRES.

(4) CEILING GRID MEMBERS MAY BE ATTACHED TO NOT MORE THAN TWO (2) ADJACENT WALLS. CEILING GRID MEMBERS SHALL BE FREE AND AT LEAST 1/2" CLEAR OF OTHER WALLS. IF WALLS RUN DIAGONALLY TO CEILING GRID SYSTEM RUNNERS, ONE END OF MAIN AND CROSS RUNNERS SHOULD BE FREE AND A MINIMUM OF 1/2 INCH CLEAR OF WALL.

(5) AT THE PERIMETER OF THE CEILING AREA WHERE MAIN OR CROSS RUNNERS ARE NOT CONNECTED TO THE ADJACENT WALL PROVIDE INTERCONNECTION BETWEEN THE RUNNERS AT THE FREE END TO PREVENT LATERAL SPREADING. A METAL STRUT OR A 16 GAUGE WIRE WITH A POSITIVE MECHANICAL CONNECTION TO THE RUNNER MAY BE USED. WHERE THE PERPINDICULAR DISTANCE FROM THE WALL TO THE FIRST PARALLEL RUNNER IS 12" OR LESS, THIS INTERLOCK IS NOT REQUIRED.

(6) PROVIDE BRACING ASSEMBLIES CONSISTING OF A COMPRESSION STRUT AND FOUR (4) 12 GAUGE SPLAYED BRACING WIRES ORIENTED 90 DEGREES FROM EACH OTHER AT THE FOLLOWING SPACING:

(A) FOR SCHOOL BUILDINGS, PLACE BRACING ASSEMBLIES AT A SPACING NOT MORE THAN 12'-0" X 12'-0" ON CENTER.

(B) FOR ESSENTIAL SERVICES BUILDINGS, PLACE BRACING ASSEMBLIES AT A SPACING NOT MORE THAN 8'-0" X 12'-0" ON CENTER.

(C) PROVIDE BRACING ASSEMBLIES AT LOCATIONS NOT MORE THAN ONE HALF (1/2) THE SPACINGS GIVEN ABOVE, FROM EACH PERIMETER WALL AND AT THE EDGE OF VERTICAL CEILING OFFSETS.

(D) THE SLOPE OF THESE WIRES SHALL NOT EXCEED 45 DEGREES FROM THE PLANE OF THE CEILING AND SHALL BE TAUT WITHOUT CAUSING THE CEILING TO LIFT. SPLICES IN BRACING WIRES ARE NOT TO BE PERMITTED.

(E) SUSPENDED ACOUSTICAL CEILING SYSTEMS WITH A CEILING AREA OF 144 SQUARE FEET OR LESS, AND FIRE RATED SUSPENDED ACOUSTICAL CEILING SYSTEMS WITH A CEILING AREA OF 96 SQUARE FEET OR LESS, SURROUNDED BY WALLS WHICH CONNECT DIRECTLY TO THE STRUCTURE ABOVE, DO NOT REQUIRE BRACING ASSEMBLIES WHEN ATTACHED TO TWO (2) ADJACENT WALLS.

(7) FASTEN HANGER WIRES WITH NOT LESS THAN THREE (3) TIGHT TURNS. FASTEN BRACING WIRES WITH NOT LESS THAN FOUR (4) TIGHT TURNS. MAKE ALL TIGHT TURNS WITHIN A DISTANCE OF 1-1/2". HANGER OR BRACING WIRE ANCHORS TO THE STRUCTURE SHOULD BE INSTALLED IN SUCH A MANNER THAT THE DIRECTION OF THE WIRE ALIGNS AS CLOSELY AS POSSIBLE WITH THE DIRECTION OF THE FORCES ACTING ON THE WIRE.

NOTE: WIRE TURNS MADE BY MACHINE WHERE BOTH STRANDS HAVE BEEN DEFORMED OR BENT IN WRAPPING CAN WAVE THE 1-1/2" REQUIREMENT, BUT THE NUMBER OF TURNS SHOULD BE MAINTAINED, AND BE AS TIGHT AS POSSIBLE.

(8) SEPARATE ALL CEILING HANGING AND BRACING WIRES AT LEAST 6" FROM ALL UNBRACED DUCTS, PIPES, CONDUIT, ETC. IT IS ACCEPTABLE TO ATTACH LIGHTWEIGHT ITEMS, SUCH AS SINGLE ELECTRICAL CONDUIT NOT EXCEEDING 3/4" NOMINAL DIAMETER, TO HANGER WIRES USING CONNECTORS ACCEPTABLE TO DSA.

(9) NOT USED.

(10) ATTACH ALL LIGHT FIXTURES AND CEILING MOUNTED AIR TERMINALS OR SERVICES, TO THE CEILING GRID RUNNERS TO RESIST A HORIZONTAL FORCE EQUAL TO THE WEIGHT OF THE FIXTURES. SCREWS OR APPROVED FASTENERS ARE REQUIRED.

(11) FLUSH OR RECESSED LIGHT FIXTURES AND AIR TERMINALS OR SERVICES, WEIGHING LESS THAN 56 POUNDS, MAY BE SUPPORTED DIRECTLY ON THE RUNNERS OF A HEAVY DUTY GRID SYSTEM BUT, IN ADDITION, THEY MUST HAVE A MINIMUM OF TWO (2) 12 GAUGE SLACK SAFETY WIRES ATTACHED TO THE FIXTURE AT DIAGONAL CORNERS AND ANCHORED TO THE STRUCTURE ABOVE. ALL 4'-0" X 4'-0" LIGHT FIXTURES MUST HAVE SLACK SAFETY WIRES AT EACH CORNER.

ALL FLUSH OR RECESSED LIGHT FIXTURES AND AIR TERMINALS OR SERVICES WEIGHING 56 POUNDS OR MORE MUST BE INDEPENDENTLY SUPPORTED BY NOT LESS THAN FOUR (4) TAUT 12 GAUGE WIRES EACH ATTACHED TO THE FIXTURE AND TO THE STRUCTURE ABOVE REGARDLESS OF THE TYPE OF CEILING GRID SYSTEM USED.

THE FOUR (4) TAUT 12 GAUGE WIRES INCLUDING THEIR ATTACHMENT TO THE STRUCTURE ABOVE MUST BE CAPABLE OF SUPPORTING FOUR (4) TIMES THE WEIGHT OF THE UNIT.

(12) NOT USED.

(13) SUPPORT SURFACE MOUNTED LIGHT FIXTURES BY AT LEAST TWO (2) POSITIVE DEVICES WHICH SURROUND THE CEILING RUNNER AND WHICH ARE EACH SUPPORTED FROM THE STRUCTURE ABOVE BY A 12 GAUGE WIRE. SPRING CLIPS OR CLAMPS THAT CONNECT ONLY TO THE RUNNER ARE NOT ACCEPTABLE.

PROVIDE ADDITIONAL SUPPORTS WHEN LIGHT FIXTURES ARE 8'-0" OR LONGER.

(14) SUPPORT PENDANT MOUNTED LIGHT FIXTURES DIRECTLY FROM THE STRUCTURE ABOVE WITH HANGER WIRES OR CABLES PASSING THROUGH EACH PENDANT HANGER AND CAPABLE OF SUPPORTING FOUR (4) TIMES THE WEIGHT OF THE FIXTURE. A BRACING ASSEMBLY, CONSISTING OF A COMPRESSION STRUT AND FOUR (4) 12 GAUGE SPLAYED BRACING WIRES ORIENTED 90 DEGREES FROM EACH OTHER, IS REQUIRED WHERE THE PENDANT HANGER PENETRATES THE CEILING. SPECIAL DETAILS ARE REQUIRED TO ATTACH THE PENDANT HANGER TO THE BRACING ASSEMBLY TO TRANSMIT HORIZONTAL FORCES.

(15) CEILING GRID SYSTEM DESIGN BASED ON ARMSTRONG PRELUDE XL SYSTEM. MAIN RUNNER SPLICES AND CROSS RUNNER INTERSECTIONS SHALL BE MECHANICAL INTERLOCKING CONNECTIONS. CLASSIFICATION OF CEILING GRID SYSTEM IS HEAVY DUTY (16 LBS./LIN. FT. MIN.).
MANUFACTURER'S CATALOG NUMBERS:
MAIN RUNNER - 200 (7301).
CROSS RUNNER - 4'-0" - 1204 (XL8341).
CROSS RUNNER - 2'-0" - 1229 (XL7328).

(16) PRIOR TO THE INSTALLATION OF MECHANICAL, PLUMBING, ELECTRICAL AND OTHER EQUIPMENT SHARING INTERSTITIAL OR ATTIC SPACE, THE GENERAL CONTRACTOR SHALL COORDINATE HIS WORK AND THE WORK OF ALL SUBCONTRACTORS USING THIS SPACE FOR THE INSTALLATION OF EQUIPMENT AND OTHER BUILDING COMPONENTS TO INSURE ALL COMPONENTS FIT IN THE SPACE AVAILABLE.

(17) ALL SUSPENDED LAY-IN ACOUSTICAL TILE CEILING GRID SYSTEMS SHALL BE CENTERED IN SPACES AS SHOWN UNLESS NOTED OTHERWISE BY DIMENSION.

(18) MECHANICAL GRILLES AND LIGHT FIXTURES ARE SHOWN FOR LOCATION ONLY. SEE MECHANICAL AND ELECTRICAL DRAWINGS AND SPECIFICATIONS FOR TYPES AND SIZES.

(19) ALL REQUIRED ACCESS PANELS MAY NOT BE SHOWN ON THE ARCHITECTURAL CEILING PLANS. PROVIDE ACCESS PANELS AT HARD CEILINGS WHERE REQUIRED TO ACCESS CONCEALED FIRE DAMPERS, PLUMBING CONTROLS, MECHANICAL CONTROLS, ELECTRICAL BOXES AND OTHER EQUIPMENT. THE CONTRACTOR SHALL COORDINATE THE QUANTITY, SIZE AND LOCATION OF REQUIRED ACCESS PANELS WITH ALL SUBCONTRACTORS.

(20) SMOKE DETECTOR LOCATIONS (WHERE REQUIRED) SHALL BE COORDINATED WITH THE ARCHITECT.

(21) PROVIDE SEISMIC SWAY BRACING IN TWO DIRECTIONS AT 90° FOR ANY SUSPENDED DUCTS, PIPE, CONDUIT OR PENDANT LIGHT FIXTURE THAT CAN NOT SWING FREE AND CLEAR TO 45° IN ANY DIRECTION. THE CONTRACTOR SHALL COORDINATE THE LOCATION OF ALL EXPOSED SWAY BRACING WITH THE ARCHITECT PRIOR TO INSTALLATION. EXCEPTIONS TO REQUIREMENT FOR SWAY BRACING INCLUDE RECTANGULAR AIR-HANDLING DUCTS LESS THAN 6 SQUARE FEET IN CROSS-SECTIONAL AREA, ROUND AIR-HANDLING DUCTS LESS THAN 28" IN DIAMETER, AND DUCTS SUSPENDED BY HANGERS 12" OR LESS. SEE 2001 CALIFORNIA BUILDING CODE CHAPTER 16 INCLUDING TABLE 16-O AND FOOTNOTES TO TABLE 16-O. REFER TO DETAIL A7/-.

09500-02.DWG

LAY-IN ACOUSTICAL TILE CEILING NOTES — J1

N.T.S.

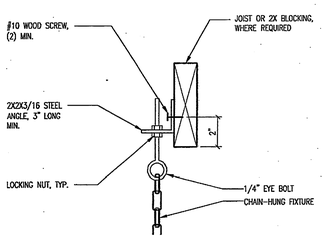

09500-15.DWG

CHAIN HUNG FIXTURE ATTACHMENT — J14

3"=1'-0"

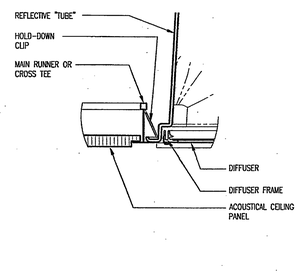

09500-13.DWG

TUBULAR SKYLIGHT DIFFUSER — J11

3"=1'-0"

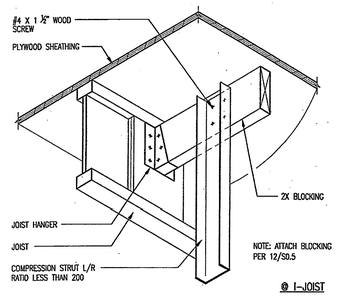

09500-09.DWG

COMPRESSION STRUT — J7

3"=1'-0"

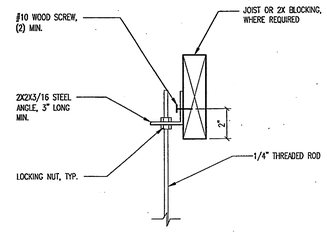

09500-14.DWG

ROD ATTACHMENT TO STRUCTURAL — E14

3"=1'-0"

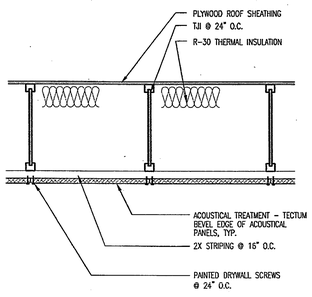

09500-12.DWG

ACOUSTICAL TREATMENT DETAIL — E11

1"=1'-0"

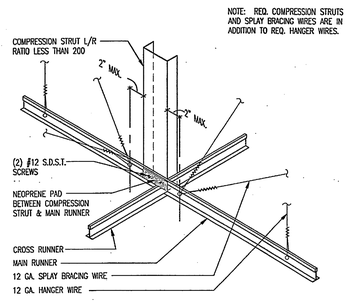

09500-03.DWG

COMPRESSION STRUT — E7

3"=1'-0"

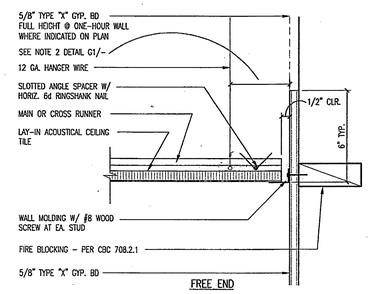

09500-05.DWG

LAY-IN CEILING AT WALL — E4

3"=1'-0"

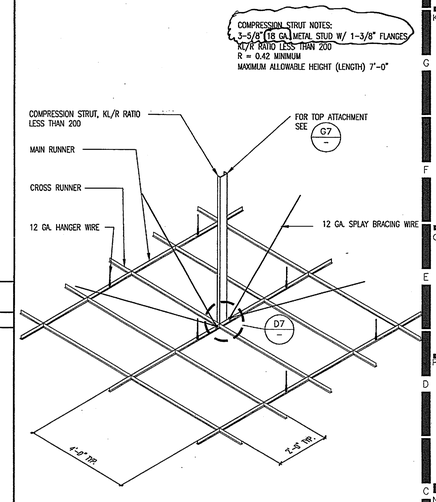

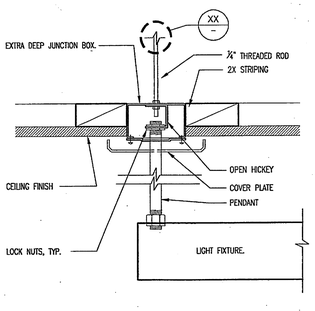

A09500-11.DWG

PENDANT LIGHT FIXTURE — A14

3"=1'-0"

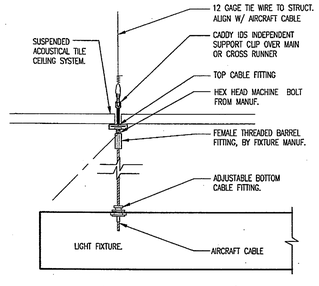

09500-10.DWG

PENDANT LIGHT FIXTURE — A11

3"=1'-0"

COMPRESSION STRUT — A7

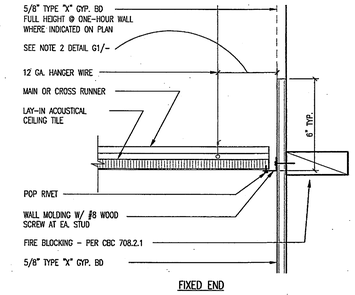

09500-04.DWG

LAY-IN CEILING AT WALL — A4

3"=1'-0"

NOTES:

1. FOR GENERAL SUSPENDED LAY-IN CEILING NOTES SEE DETAIL G1/-
2. PROVIDE SETS OF FOUR SPLAYED BRACING WIRES, ORIENTED 90 DEGREES FROM EACH OTHER, AND COMPRESSION STRUT AT A SPACING NOT MORE THAN 12'-0" X 12'-0" ON CENTER. PROVIDE 12 GAUGE MINIMUM SPLAYED BRACING WIRES FASTENED WITH NOT LESS THAN FOUR TIGHT TURNS IN 1-1/2 INCHES AT BOTH ENDS OF WIRE. SLOPE OF SPLAYED BRACING WIRES SHOULD NOT EXCEED 45 DEGREES FROM THE PLANE OF THE CEILING.
3. PROVIDE HANGER WIRES AT A SPACING NOT MORE THAN 4'-0" X 4'-0" ON CENTER. PROVIDE 12 GAUGE MINIMUM HANGER WIRES FASTENED WITH NOT LESS THAN THREE TIGHT TURNS IN 1-1/2 INCHES AT BOTH ENDS OF WIRE.

09500-01.DWG

2 X 4 SUSPENDED ACOUST. CEILING GRID — A1

N.T.S.

HMC ARCHITECTS
Architecture Interiors Planning
3546 CONCOURS STREET
ONTARIO, CALIFORNIA 91764
Telephone: 909 . 989 . 9979
Fax: 909 . 483 . 1400
www. hmcarchitects .com

AS BUILT

Key Plan

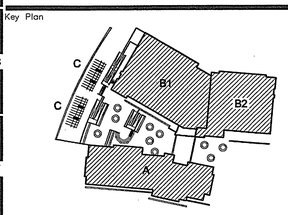

Consultant's Seal

Agency Approval

Project Title

CITY OF RIVERSIDE

ORANGE TERRACE LIBRARY / COMMUNITY CENTER
PLAN CHECK NO. 07-1397

20010 ORANGE TERRACE PARKWAY
RIVERSIDE, CA 92508

HMC ARCHITECTS

No.	Revisions/Submissions	Date:
	Design Development Submittal	12/18/06
	Building Department Submittal	03/29/07
1	Building Department Resubmittal	05/22/07
2	Building Department Resubmittal / QA QC Review	06/22/07

Drawing Title

CEILING DETAILS

Architect's Seal

LICENSED ARCHITECT CHRISTOPHER A. BUCHALO NO. C-19759 REN. 02-24-09 STATE OF CALIFORNIA

Designed: SS	Project No. 2340001
Drawn: MM	Scale: AS NOTED
Checked: LP	Drawing No.
Reviewed: RS	A10.9.2
Date: 06-22-07	Sheet 01 of 11

File Name: N:\2005 Jobs\2340 City of Riverside - Diffenbaugh\001-000\18-CAD\Sheets\A10.9.2 CEILING DETAILS ACOUSTICAL.dwg Jun 21,2007-12:50pm

PLEASE RECYCLE A10.9.2 CEILING DETAILS ACOUSTICAL.DWG

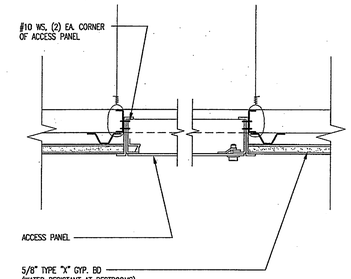

09200-34.DWG

N14	ACCESS PANEL AT SUSPENDED CEILING	N11
		3"=1'-0"

NOTE: REQ. COMPRESSION STRUTS AND SPLAY BRACING WIRES ARE IN ADDITION TO REQ. HANGER WIRES.

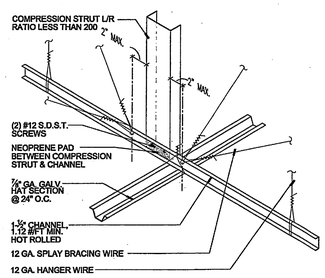

09200-32.DWG

N7	COMPRESSION STRUT	N7
		N.T.S.

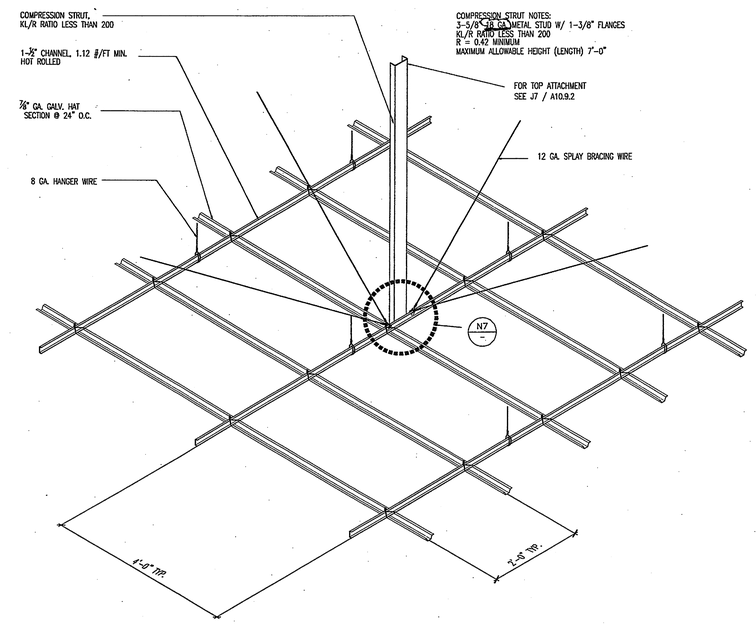

NOTE: FOR GENERAL SUSPENDED GYPSUM BOARD CEILING NOTES SEE DETAIL A1/ –

NOTE: PROVIDE SETS OF FOUR SPLAYED BRACING WIRES, ORIENTED 90 DEGREES FROM EACH OTHER, AND COMPRESSION STRUT AT A SPACING NOT MORE THAN 12'-0" X 12'-0" ON CENTER. PROVIDE 12 GAUGE MINIMUM SPLAYED BRACING WIRES FASTENED WITH NOT LESS THAN FOUR TIGHT TURNS IN 1-1/2 INCHES AT BOTH ENDS OF WIRE. SLOPE OF SPLAYED BRACING WIRES SHOULD NOT EXCEED 45 DEGREES FROM THE PLANE OF THE CEILING.

NOTE: PROVIDE HANGER WIRES AT A SPACING NOT MORE THAN 4'-0" X 4'-0" ON CENTER. PROVIDE 8 OR 12 GAUGE MINIMUM HANGER WIRES PER NOTE 3 DETAIL A1/–. FASTENED WITH NOT LESS THAN THREE TIGHT TURNS IN 1-1/2 INCHES AT BOTH ENDS OF WIRE.

09200-31.DWG

HMC ARCHITECTS
Architecture Interiors Planning
3546 CONCOURS STREET
ONTARIO, CALIFORNIA 91764
Telephone: 909 . 989 . 9979
Fax: 909 . 483 . 1400
www. hmcarchitects .com

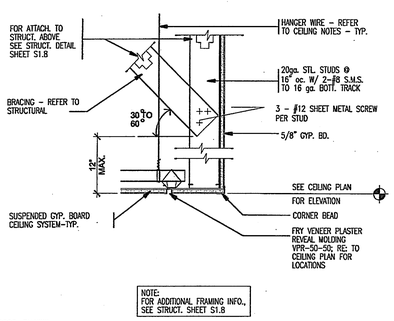

09200-35.DWG

J14	SUSPENDED GYP. BOARD CEILING	J11
		1 1/2"=1'-0"

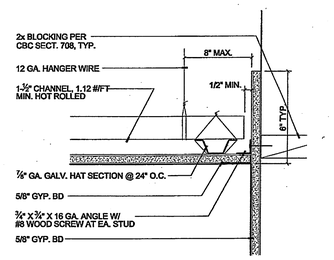

09200-33.DWG

J7	SUSPENDED GYPSUM BOARD CEILING	J7
		3"=1'-0"

J1	SUSPENDED GYSUM BOARD CEILING SYSTEM	J1
		3/4"=1'-0"

AS BUILT

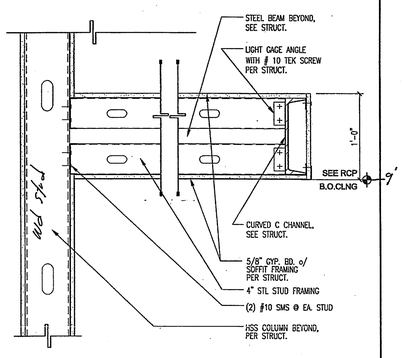

09200-11.DWG

E14	CANOPY DETAIL	E11
		1 1/2"=1'-0"

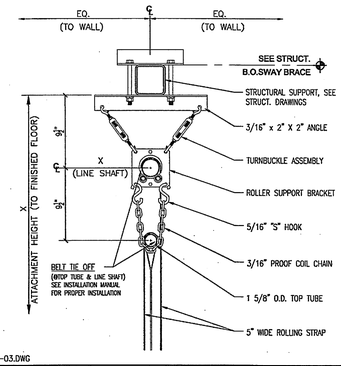

10650-03.DWG

A14	GYM. DIVIDER CURTAIN	A11
		1 1/2"=1'-0"

THE TOTAL WEIGHT OF THE CEILING SYSTEM, INCLUDING AIR CONDITIONING GRILLES AND LIGHT FIXTURES, SHALL NOT EXCEED FOUR (4) POUNDS PER SQUARE FOOT. INSTALLATION SHALL COMPLY WITH D.S.A. I.R. M-4 AND THE FOLLOWING:

(1) MATERIALS ARE TO COMPLY WITH APPLICABLE C.B.C. STANDARDS. GYPSUM BOARD SHALL BE ONE LAYER OF 5/8" GYPSUM BOARD UNLESS NOTED OTHERWISE.

(2) GYPSUM BOARD CEILINGS SHALL NOT SUPPORT MATERIALS OR BUILDING COMPONENTS OTHER THAN GRILLES, LIGHT FIXTURES, SMALL ELECTRICAL CONDUITS, SMALL DUCTS AND THE LIKE. ALL SUCH COMPONENTS SHALL BE SUPPORTED EITHER DIRECTLY FROM THE MAIN RUNNERS, OR BY SUPPLEMENTAL FRAMING WHICH IS SUPPORTED BY MAIN RUNNERS. NO VERTICAL LOADS OTHER THAN THE GYPSUM BOARD DEAD LOAD SHALL BE APPLIED TO CROSS-FURRING.

(3) VERTICAL HANGER WIRES ARE 8 GAUGE WIRE AT 4'-0" ON CENTER EACH WAY IF THE CEILING IS ACCESSIBLE, 12 GAUGE WIRE AT 4'-0" ON CENTER EACH WAY IF THE CEILING IS NOT ACCESSIBLE.

(4) CROSS-FURRING SHALL BE 7/8", 25 GAUGE GALVANIZED HAT SECTIONS AT 2'-0" ON CENTER MAXIMUM.

(5) MAIN RUNNERS SHALL BE 1-1/2", 1.12 LBS./FT. HOT ROLLED GALVANIZED CHANNELS AT 4'-0" ON CENTER MAXIMUM.

(6) VERTICAL HANGER WIRES SHALL BE SADDLE-TIED AROUND MAIN RUNNERS TO DEVELOP THE FULL STRENGTH OF THE HANGERS.

(7) CROSS-FURRING SHALL BE SADDLE-TIED TO THE MAIN RUNNERS WITH ONE STRAND OF 16 GAUGE OR TWO STRANDS OF 18 GAUGE TIE WIRE.

(8) MAIN RUNNERS SHALL BE SPLICED BY LAPPING AND INTERLOCKING FLANGES 1'-0" MINIMUM AND TYING NEAR EACH END WITH DOUBLE LOOPS OF 16 GAUGE WIRE.

(9) CROSS FURRING SHALL BE SPLICED BY LAPPING AND INTERLOCKING THE PIECES 8" MINIMUM AND TYING NEAR EACH END WITH DOUBLE LOOPS OF 16 GAUGE WIRE.

(10) FASTEN HANGER WIRES WITH NOT LESS THAN THREE (3) TIGHT TURNS. FASTEN BRACING WIRES WITH NOT LESS THAN FOUR (4) TIGHT TURNS. MAKE ALL TIGHT TURNS WITHIN A DISTANCE OF 1-1/2". HANGER OR BRACING WIRE ANCHORS TO THE STRUCTURE SHOULD BE INSTALLED IN SUCH A MANNER THAT THE DIRECTION OF THE WIRE ALIGNS AS CLOSELY AS POSSIBLE WITH THE DIRECTION OF THE FORCES ACTING ON THE WIRE.

NOTE: WIRE TURNS MADE BY MACHINE WHERE BOTH STRANDS HAVE BEEN DEFORMED OR BENT IN WRAPPING CAN WAIVE THE 1-1/2" REQUIREMENT, BUT THE NUMBER OF TURNS SHOULD BE MAINTAINED, AND BE AS TIGHT AS POSSIBLE.

(11) SEPARATE ALL CEILING HANGING AND BRACING WIRES AT LEAST 6" FROM ALL UNBRACED DUCTS, PIPES, CONDUIT, ETC. IT IS ACCEPTABLE TO ATTACH LIGHTWEIGHT ITEMS, SUCH AS SINGLE ELECTRICAL CONDUIT NOT EXCEEDING 3/4" NOMINAL DIAMETER, TO HANGER WIRES USING CONNECTORS ACCEPTABLE TO DSA.

(12) WHEN DRILLED-IN CONCRETE ANCHORS OR SHOT-IN ANCHORS ARE USED IN REINFORCED CONCRETE FOR HANGER WIRES, 1 OUT OF 10 MUST BE FIELD TESTED FOR 200 POUNDS IN TENSION. WHEN DRILLED-IN CONCRETE ANCHORS ARE USED FOR BRACING WIRES, 1 OUT OF 2 MUST BE FIELD TESTED FOR 440 POUNDS IN TENSION. SHOT-IN ANCHORS IN CONCRETE ARE NOT PERMITTED FOR BRACING WIRES. IF ANY SHOT-IN OR DRILLED-IN ANCHOR FAILS, SEE CBC SECTION 1923A.3.5.

NOTE: DRILLED-IN OR SHOT-IN ANCHORS REQUIRE SPECIAL AGENCY WHEN USED IN PRESTRESSED CONCRETE.

(13) PROVIDE TRAPEZE OR OTHER SUPPLEMENTARY SUPPORT MEMBERS AT OBSTRUCTIONS TO TYPICAL HANGER SPACING. PROVIDE ADDITIONAL HANGERS, STRUTS OR BRACES AS REQUIRED AT ALL CEILING BREAKS, SOFFITS OR DISCONTINUOUS AREAS. HANGER WIRES THAT ARE MORE THAN 1 IN 6 OUT OF PLUMB ARE TO HAVE COUNTER-SLOPING WIRES.

(14) ALL RECESSED OR DROP-IN LIGHT FIXTURES, AS WELL AS CEILING MOUNTED MECHANICAL AIR TERMINALS AND SERVICES, SHALL BE SUPPORTED DIRECTLY BY MAIN RUNNERS OR BY SUPPLEMENTAL FRAMING WHICH IS SUPPORTED BY MAIN RUNNERS AND POSITIVELY ATTACHED WITH SCREWS OR OTHER APPROVED CONNECTORS.

(15) SURFACE MOUNTED FIXTURES SHALL BE ATTACHED TO A MAIN RUNNER WITH A POSITIVE CLAMPING DEVICE MADE OF MATERIAL WITH A MINIMUM OF 14 GAUGE. ROTATIONAL SPRING CLAMPS DO NOT COMPLY.

(16) PROVIDE BRACING ASSEMBLIES CONSISTING OF A COMPRESSION STRUT AND FOUR (4) 12 GAUGE SPLAYED BRACING WIRES ORIENTED 90 DEGREES FROM EACH OTHER AT THE FOLLOWING SPACING:

(A) FOR SCHOOL BUILDINGS, PLACE BRACING ASSEMBLIES AT A SPACING NOT MORE THAN 12'-0" X 12'-0" ON CENTER.

(B) FOR ESSENTIAL SERVICES BUILDINGS, PLACE BRACING ASSEMBLIES AT A SPACING NOT MORE THAN 8'-0" X 12'-0" ON CENTER.

(C) PROVIDE BRACING ASSEMBLIES AT LOCATIONS NOT MORE THAN ONE HALF (1/2) THE SPACINGS GIVEN ABOVE, FROM EACH PERIMETER WALL AND AT THE EDGE OF VERTICAL CEILING OFFSETS.

(D) THE SLOPE OF THESE WIRES SHALL NOT EXCEED 45 DEGREES FROM THE PLANE OF THE CEILING AND SHALL BE TAUT WITHOUT CAUSING THE CEILING TO LIFT. SPLICES IN BRACING WIRES ARE NOT TO BE PERMITTED.

(E) CEILING GRID MEMBERS MAY BE ATTACHED TO NOT MORE THAN TWO (2) ADJACENT WALLS. CEILING GRID MEMBERS SHALL BE FREE AND AT LEAST 1/2" CLEAR OF OTHER WALLS. IF WALLS RUN DIAGONALLY TO CEILING GRID SYSTEM RUNNERS, ONE END OF MAIN AND CROSS RUNNERS SHOULD BE FREE AND A MINIMUM OF 1/2 INCH CLEAR OF WALL.

(F) SUSPENDED CEILING SYSTEMS WITH A CEILING AREA OF 144 SQUARE FEET OR LESS, AND FIRE RATED SUSPENDED CEILING SYSTEMS WITH A CEILING AREA OF 96 SQUARE FEET OR LESS, SURROUNDED BY WALLS WHICH CONNECT DIRECTLY TO THE STRUCTURE ABOVE, DO NOT REQUIRE BRACING ASSEMBLIES WHEN ATTACHED TO TWO (2) ADJACENT WALLS.

(17) SUPPORT PENDANT MOUNTED LIGHT FIXTURES DIRECTLY FROM THE STRUCTURE ABOVE WITH HANGER WIRES OR CABLES PASSING THROUGH EACH PENDANT HANGER AND CAPABLE OF SUPPORTING FOUR (4) TIMES THE WEIGHT OF THE FIXTURE. A BRACING ASSEMBLY, CONSISTING OF A COMPRESSION STRUT AND FOUR (4) 12 GAUGE SPLAYED BRACING WIRES ORIENTED 90 DEGREES FROM EACH OTHER, IS REQUIRED WHERE THE PENDANT HANGER PENETRATES THE CEILING. SPECIAL DETAILS ARE REQUIRED TO ATTACH THE PENDANT HANGER TO THE BRACING ASSEMBLY TO TRANSMIT HORIZONTAL FORCES.

(18) PRIOR TO THE INSTALLATION OF MECHANICAL, PLUMBING, ELECTRICAL AND OTHER EQUIPMENT SHARING INTERSTITIAL OR ATTIC SPACE, THE GENERAL CONTRACTOR SHALL COORDINATE HIS WORK AND THE WORK OF ALL SUBCONTRACTORS USING THIS SPACE FOR THE INSTALLATION OF EQUIPMENT AND OTHER BUILDING COMPONENTS TO INSURE ALL COMPONENTS FIT IN THE SPACE AVAILABLE.

(19) MECHANICAL GRILLES AND LIGHT FIXTURES ARE SHOWN FOR LOCATION ONLY. SEE MECHANICAL AND ELECTRICAL DRAWINGS AND SPECIFICATIONS FOR TYPES AND SIZES.

(20) ALL REQUIRED ACCESS PANELS MAY NOT BE SHOWN ON THE ARCHITECTURAL CEILING PLANS. PROVIDE ACCESS PANELS AT HARD CEILINGS WHERE REQUIRED TO ACCESS CONCEALED FIRE DAMPERS, PLUMBING CONTROLS, MECHANICAL CONTROLS, ELECTRICAL BOXES AND OTHER EQUIPMENT. THE CONTRACTOR SHALL COORDINATE THE QUANTITY, SIZE AND LOCATION OF REQUIRED ACCESS PANELS WITH ALL SUBCONTRACTORS.

(21) SMOKE DETECTOR LOCATIONS (WHERE REQUIRED) SHALL BE COORDINATED WITH THE ARCHITECT.

(22) PROVIDE SEISMIC SWAY BRACING IN TWO DIRECTIONS AT 90° FOR ANY SUSPENDED DUCTS, PIPE, CONDUIT OR PENDANT LIGHT FIXTURE THAT CAN NOT SWING FREE AND CLEAR TO 45° IN ANY DIRECTION. THE CONTRACTOR SHALL COORDINATE THE LOCATION OF ALL EXPOSED SWAY BRACING WITH THE ARCHITECT PRIOR TO INSTALLATION. EXCEPTIONS TO REQUIREMENT FOR SWAY BRACING INCLUDE RECTANGULAR AIR-HANDLING DUCTS LESS THAN 6 SQUARE FEET IN CROSS-SECTIONAL AREA, ROUND AIR-HANDLING DUCTS LESS THAN 28" IN DIAMETER, AND DUCTS SUSPENDED BY HANGERS 12" OR LESS. SEE 1998 CALIFORNIA BUILDING CODE CHAPTER 16 INCLUDING TABLE 16-O AND FOOTNOTES TO TABLE 16-O.

A1	SUSPENDED GYPSUM BOARD CEILING NOTES	A1
		N.T.S.

Key Plan

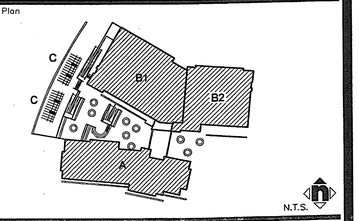

Consultant's Seal

Agency Approval

Project Title

CITY OF RIVERSIDE

ORANGE TERRACE LIBRARY / COMMUNITY CENTER

PLAN CHECK NO. 07-1397

20010 ORANGE TERRACE PARKWAY
RIVERSIDE, CA 92508

HMC ARCHITECTS

No.	Revisions/Submissions	Date:
	Design Development Submittal	12/18/06
	Building Department Submittal	03/29/07
1	Building Department Resubmittal	05/22/07
2	Building Department Resubmittal / QA QC Review	06/22/07

Drawing Title

CEILING DETAILS

Architect's Seal

LICENSED ARCHITECT CHRISTOPHER RICHARD TAYLOR LICENSE NO. C-13759 REN. 02-24-08 STATE OF CALIFORNIA

Designed: SS	Project No. 2340001
Drawn: XL	Scale: AS NOTED
Checked: LP	Drawing No.
Reviewed: RS	A10.9.3
Date: 06-22-07	Sheet 01 of ##

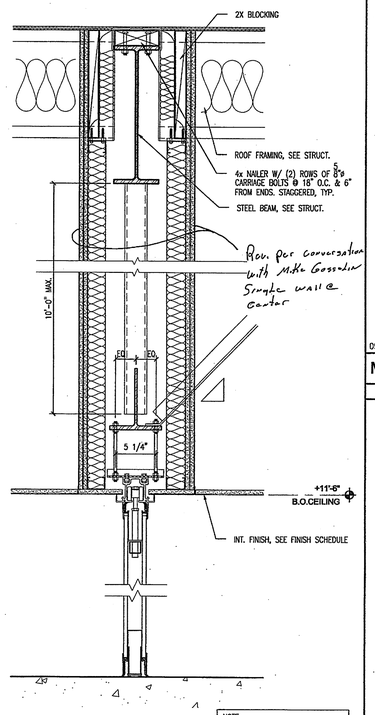

J10650-02.DWG

FOLDING PANEL PARTITION - HEAD & BASE @ BUILDING B BANQUET ROOMS — J14 — 1 1/2" = 1'-0"

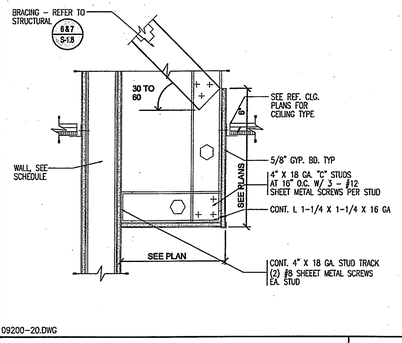

09200-20.DWG

METAL FRAMED SOFFIT @ RATED WALL — N11 — 3"=1'-0"

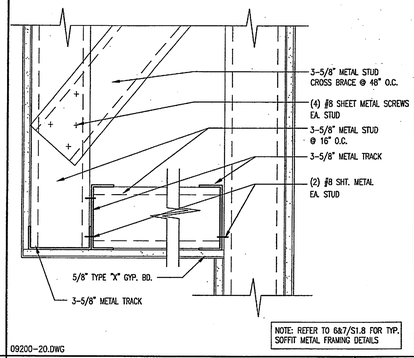

09200-20.DWG

GYP. BD. SOFFIT DETAIL -METAL STUDS — N7 — 3"=1'-0"

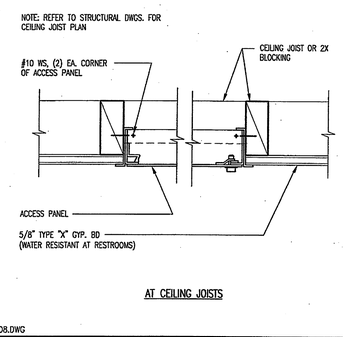

AT CEILING JOISTS

09200-08.DWG

ACCESS PANEL — N4 — 3"=1'-0"

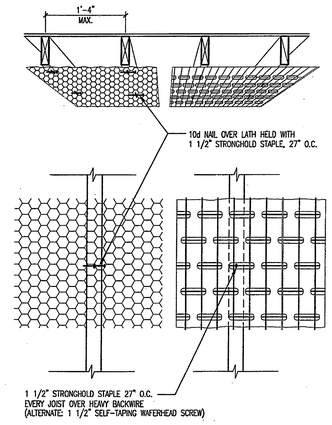

REFLECTED CEILING PLAN

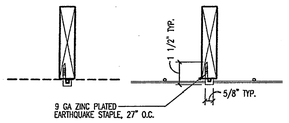

SECTION

NOTE:
HORIZONTAL LATH NAILING SHALL CONFORM TO TITLE 24 SECT. 2506A.5.2.

09200-05.DWG

HORIZONTAL LATH NAILING — J1 — N.T.S.

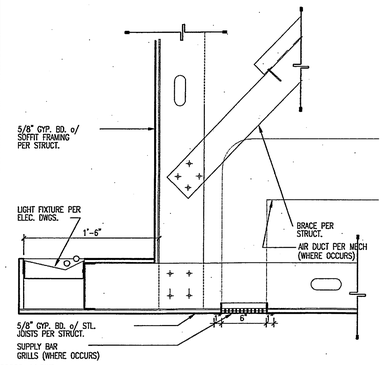

09200-11.DWG

SOFFIT DETAIL — J11 — 3"=1'-0"

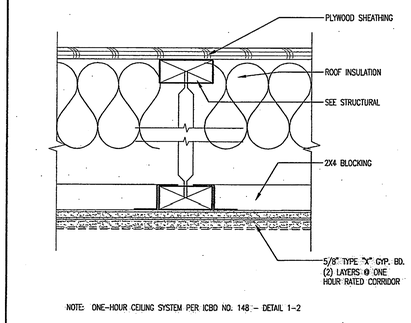

NOTE: ONE-HOUR CEILING SYSTEM PER ICBO NO. 148 - DETAIL 1-2

09200-21.DWG

GYP. BD CEILING - FRAMED — J7 — 3"=1'-0"

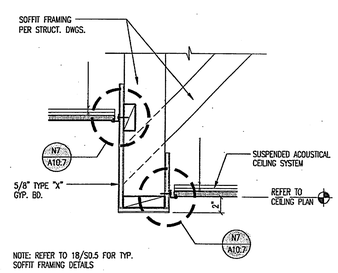

09200-02.DWG

CEILING DETAIL — J4 — 3"=1'-0"

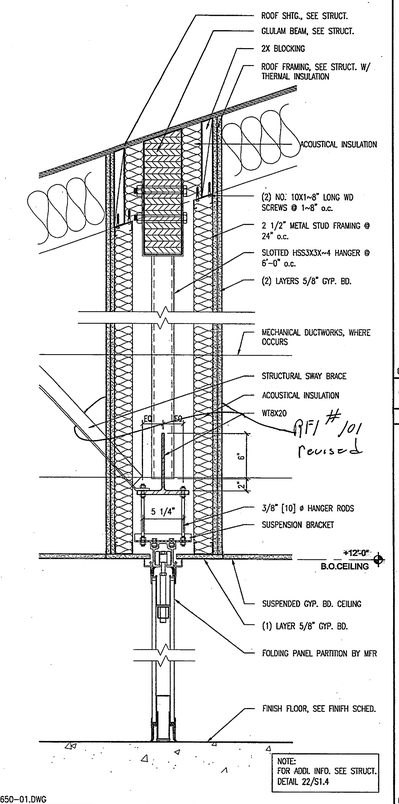

A10650-01.DWG

FOLDING PANEL PARTITION - HEAD & BASE @ BUILDING A CONFERENCE ROOMS — A14 — 1 1/2" = 1'-0"

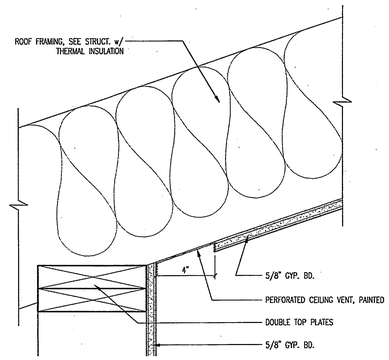

09200-36.DWG

CEILING VENT DETAIL — E11 — 3"=1'-0"

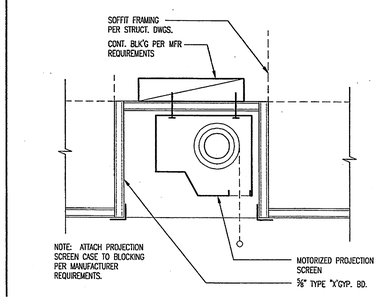

09200-07.DWG

RECESSED PROJECTION SCREEN — E7 — 3"=1'-0"

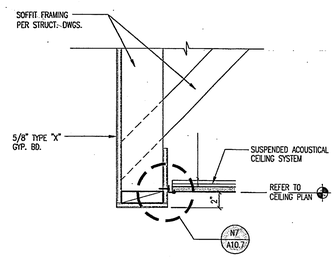

09200-06.DWG

CEILING DETAIL — E4 — 1 1/2"=1'-0"

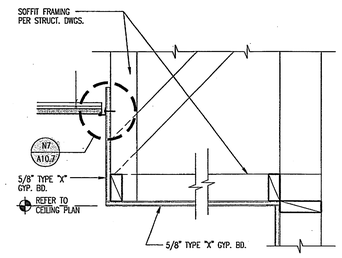

09200-03.DWG

GYP. BD. SOFFIT DETAIL — E1 — 1 1/2"=1'-0"

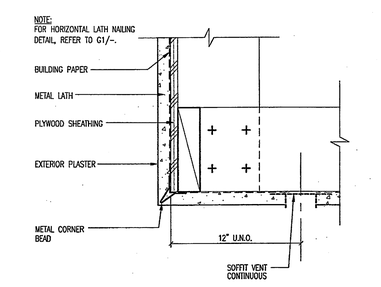

09200-01.DWG

TYPICAL PLASTER SOFFIT DETAIL — A11 — 3"=1'-0"

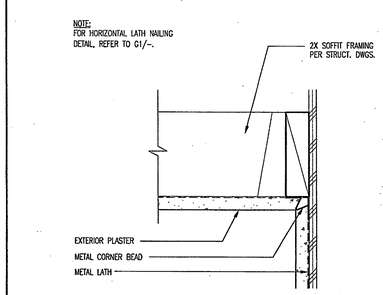

09200-01.DWG

TYPICAL PLASTER SOFFIT DETAIL — A7 — 3"=1'-0"

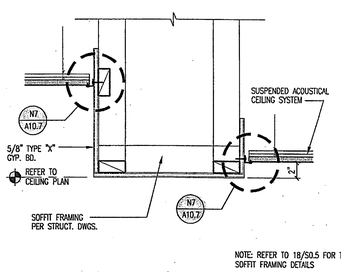

09200-04.DWG

CEILING DETAIL — A4 — 1 1/2"=1'-0"

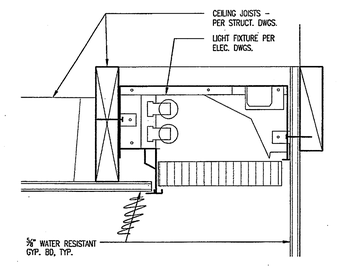

09200-09.DWG

LIGHT ALCOVE DETAIL — A1 — 3"=1'-0"

HMC ARCHITECTS
Architecture Interiors Planning
3546 CONCOURS STREET
ONTARIO, CALIFORNIA 91764
Telephone: 909 . 989 . 9979
Fax: 909 . 483 . 1400
www. hmcarchitects .com

AS BUILT

Key Plan

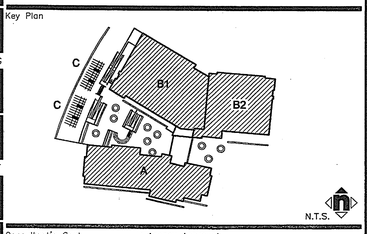

Consultant's Seal

Agency Approval

Project Title

CITY OF RIVERSIDE

ORANGE TERRACE LIBRARY / COMMUNITY CENTER
PLAN CHECK NO. 07-1397

20010 ORANGE TERRACE PARKWAY
RIVERSIDE, CA 92508

HMC ARCHITECTS

No.	Revisions/Submissions	Date:
	Design Development Submittal	12/18/06
	Building Department Submittal	03/29/07
1	Building Department Resubmittal	05/22/07
2	Building Department Resubmittal / QA QC Review	06/22/07

Drawing Title

CEILING DETAILS - MISC.

Architect's Seal

LICENSED ARCHITECT
CHRISTOPHER MICHAEL TAYLOR
LICENSE NO. C-19759
REN. 02-24-09
STATE OF CALIFORNIA

Designed:	SS	Project No.	2340001
Drawn:	XL	Scale:	AS NOTED
Checked:	LP	Drawing No.	A10.9.4
Reviewed:	RS		
Date:	06-22-07	Sheet 01	of ##

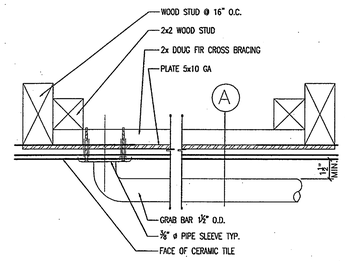

PLAN VIEW

06400-22.DWG

N14	N11	GRAB BAR MOUNTING BACKING	N7
			3" = 1'-0"

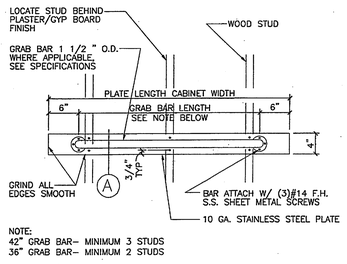

NOTE:
42" GRAB BAR– MINIMUM 3 STUDS
36" GRAB BAR– MINIMUM 2 STUDS

ELEVATION

06400-23.DWG

N4	GRAB BAR ELEVATION
1" = 1'-0"	

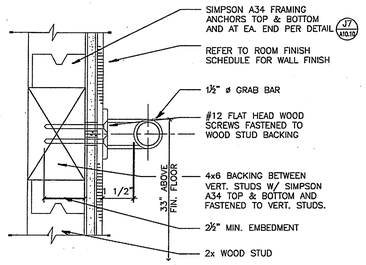

06400-19.DWG

N1	GRAB BAR DETAIL
3"=1'-0"	

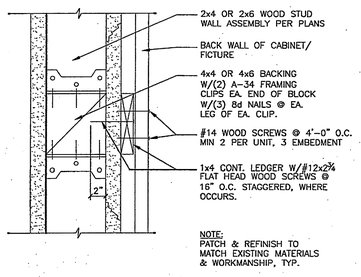

06400-20.DWG

J14	J11	TYPICAL BACKING	J7
			3"=1'-0"

J4	J1

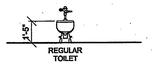

TOILET

NOTES:
1. FLUSH VALVE TO BE LOCATED TO THE WIDE SIDE OF COMPARTMENT.
2. GRAB BAR MOUNTING/BACKING PER DETAIL 7/A-916

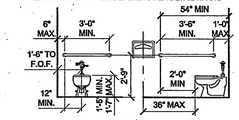

D.P. TOILET/GRAB BARS

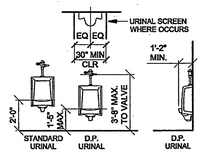

URINAL

NOTE: FIXTURES SHALL BE FULLY RECESSED OR SEMI-RECESSED WITH A MAX. 3" PROJECTION

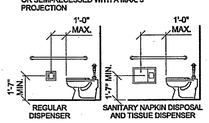

TOILET TISSUE DISPENSER

NOTE: PROVIDE MIN. 30" X 48" CLEAR FLOOR SPACE IN FRONT OF ACCESSORY TO ALLOW FORWARD OR PARALLEL APPROACH. HIGHEST OPERABLE PART AT MAX. 3'-4" A.F.F.

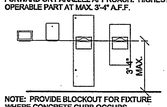

NOTE: PROVIDE BLOCKOUT FOR FIXTURE WHERE CONCRETE CURB OCCURS

PAPER TOWEL DISPENSER

NOTE: PROVIDE MIN. 30" X 48" CLEAR FLOOR SPACE IN FRONT OF ACCESSORY TO ALLOW FORWARD OR PARALLEL APPROACH. HIGHEST OPERABLE PART AT MAX. 3'-4" A.F.F.

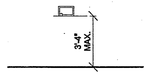

HAND DRYER

E14	E11		E7

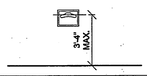

SEAT COVER DISP.

NOTE: PROVIDE MIN. 30" X 48" CLEAR FLOOR SPACE IN FRONT OF ACCESSORY TO ALLOW FORWARD OR PARALLEL APPROACH. HIGHEST OPERABLE PART AT MAX. 3'-4" A.F.F.

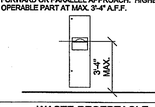

WASTE RECEPTACLE

NOTE: PROVIDE MIN. 30" X 48" CLEAR FLOOR SPACE IN FRONT OF ACCESSORY TO ALLOW FORWARD OR PARALLEL APPROACH. HIGHEST OPERABLE PART AT MAX. 3'-4" A.F.F.

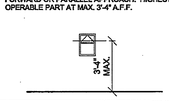

SANITARY NAPKIN DISPOSAL

NOTE: PROVIDE MIN. 30" X 48" CLEAR FLOOR SPACE IN FRONT OF ACCESSORY TO ALLOW FORWARD OR PARALLEL APPROACH. HIGHEST OPERABLE PART AT MAX. 3'-4" A.F.F.

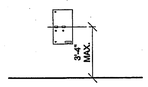

NAPKIN/TAMPON VENDOR

NOTE: DRAIN AND HOT WATER PIPING SHALL BE INSULATED AND THERE SHALL BE NO SHARP OR ABRASIVE ELEMENTS UNDER LAVATORY.

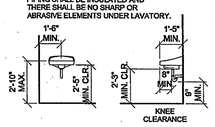

LAVATORY

NOTE: PROVIDE MIN. 30" X 48" CLEAR FLOOR SPACE IN FRONT OF ACCESSORY TO ALLOW FORWARD OR PARALLEL APPROACH. HIGHEST OPERABLE PART AT MAX. 3'-4" A.F.F.

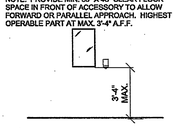

MIRROR / SOAP DISPENSER

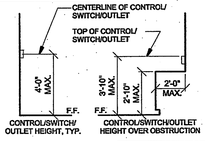

CONTROLS, SWITCHES & OUTLETS

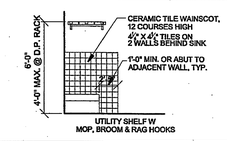

MOP RACK

NOTE: DRAIN AND HOT WATER PIPING SHALL BE INSULATED AND THERE SHALL BE NO SHARP OR ABRASIVE ELEMENTS UNDER SINK.

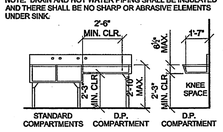

3-COMPARTMENT SINK

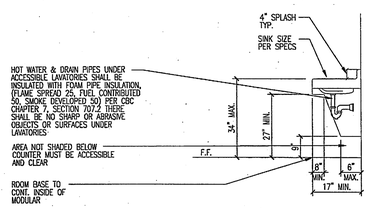

FAUCET CONTROLS & OPERATING MECHANISMS SHALL BE OPERABLE WITH ONE HAND AND SHALL NOT REQUIRE TIGHT GRASPING, PINCHING OR TWISTING OF THE WRIST. THE FORCE REQUIRED TO ACTIVATE CONTROLS SHALL BE NO MORE THAN 5 LBS. LEVER OPERATED, PUSH TYPE & ELECTRONICALLY CONTROLLED MECHANISMS ARE ACCEPTABLE. SELF CLOSING VALVES ARE ALLOWED IF THE FAUCET REMAINS OPEN FOR AT LEAST 10 SECONDS.

06400-13.DWG

A14	A11	LAVATORY/SINK	A7
			N.T.S.

FIXTURE AND ACCESSORY MOUNTING HEIGHTS	A1
15000-02.DWG	1/4" = 1'-0"

HMC ARCHITECTS
Architecture Interiors Planning
3546 CONCOURS STREET
ONTARIO, CALIFORNIA 91764
Telephone: 909 . 989 . 9979
Fax: 909 . 483 . 1400
www. hmcarchitects .com

AS BUILT

Key Plan

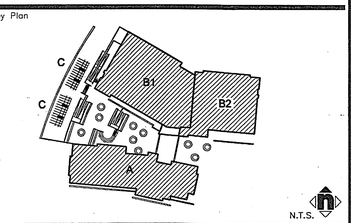

Consultant's Seal

Agency Approval

Project Title

CITY OF RIVERSIDE

ORANGE TERRACE LIBRARY / COMMUNITY CENTER
PLAN CHECK NO. 07-1397

20010 ORANGE TERRACE PARKWAY
RIVERSIDE, CA 92508

SM HMC ARCHITECTS

No.	Revisions/Submissions	Date:
	Design Development Submittal	12/18/06
	Building Department Submittal	03/29/07
1	Building Department Resubmittal	05/22/07
2	Building Department Resubmittal / OA QC Review	06/22/07

Drawing Title

BATHROOM DET'S & MOUNTING HEIGHTS

Architect's Seal

LICENSED ARCHITECT CLAYTON R. BACHMAN LOR CAL. NO. C-19129 REN. 02-24-09 STATE OF CALIFORNIA

Designed: SS		Project No. 2340001	
Drawn: MM		Scale: AS NOTED	
Checked: LP		Drawing No.	
Reviewed: RS		A10.10	
Date: 06-22-07		Sheet of ##	

File Name: N:\2005 Jobs\2340 City of Riverside – Diffenbaugh\001-000\18-CAD\Sheets\A10.10 BATHROOM DETAILS & TYP. MOUNTING HEIGHTS.dwg Jun 21,2007-12:50pm

PLEASE RECYCLE

A10.10 BATHROOM DETAILS & TYP. MOUNTING HEIGHTS.DWG

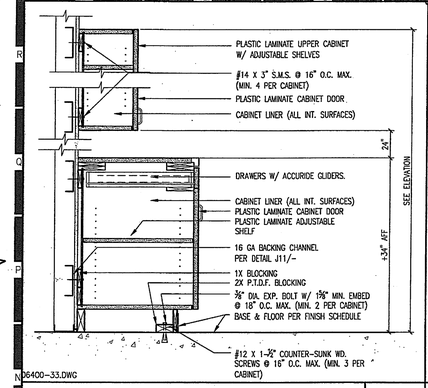

ACCESSIBLE BASE CABINET | N14 | 1"=1'-0"

NOT USED | N11

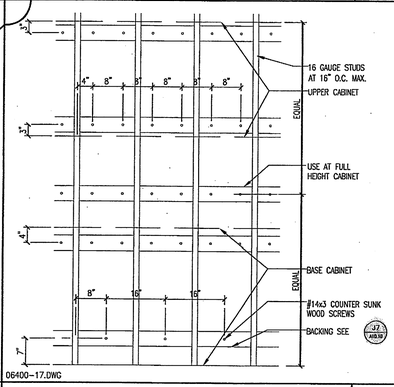

J14 | TOP & BASE CABINET SUPPORT | J11 | 3/4"=1'-0"

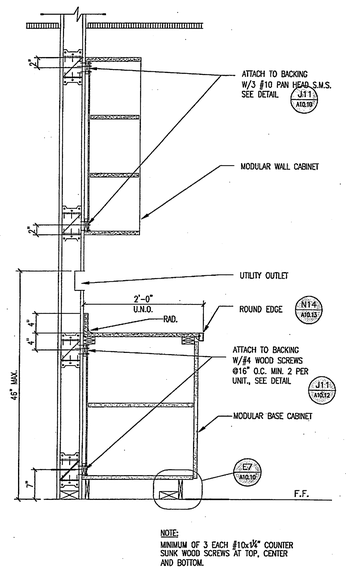

CASEWORK SECTION | J7 | 1" = 1'-0"

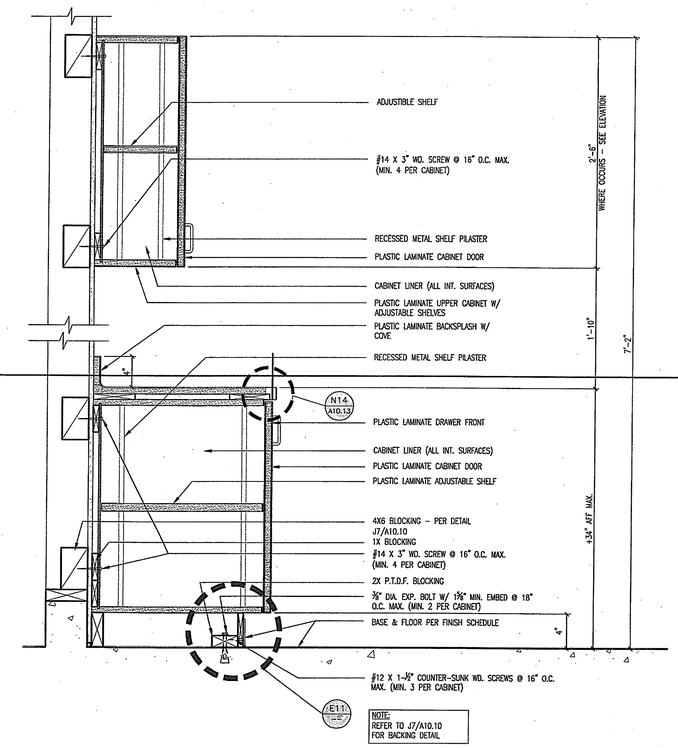

ACCESSIBLE BASE CABINET DETAIL | J1 | 1 1/2" = 1'-0"

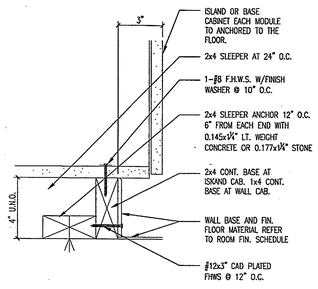

E14 | FLOOR ANCHORAGE | E11 | 3"=1'-0"

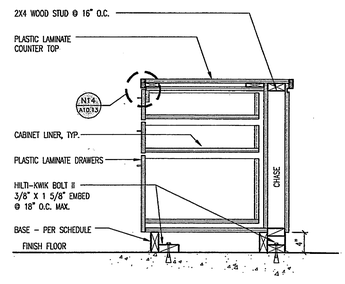

CASEWORK SECTION | E7 | 1"=1'-0"

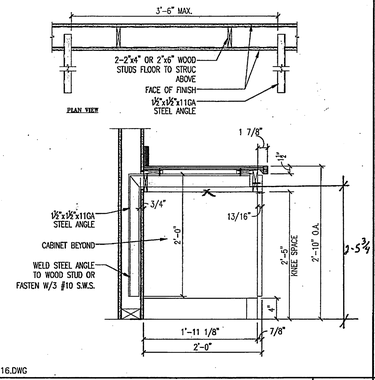

COUNTERTOP SUPPORT | A14 | 1" = 1'-0"

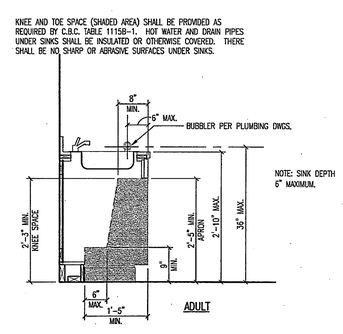

REQUIRED KNEE & TOE SPACE | A7 | 3/4"=1'-0"

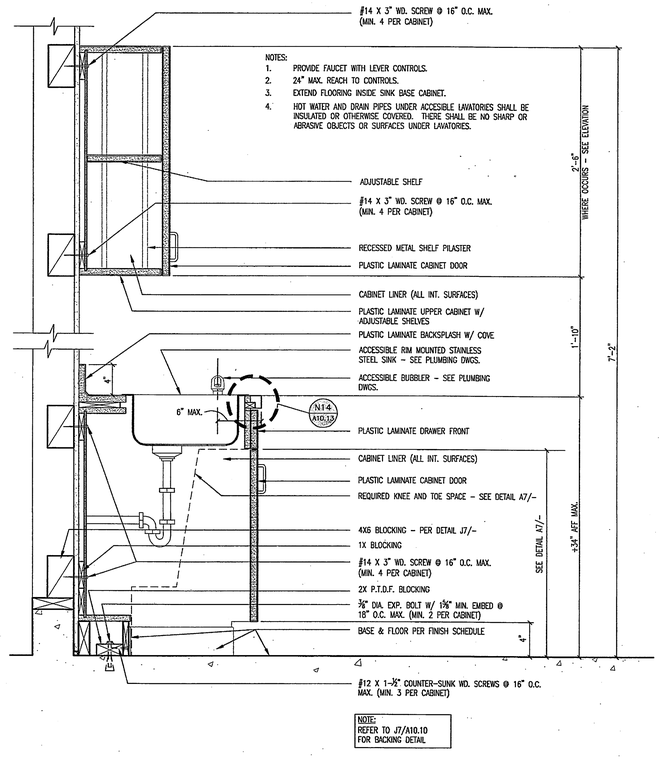

ACCESSIBLE SINK BASE CABINET DETAIL | A1 | 1 1/2" = 1'-0"

HMC ARCHITECTS
Architecture Interiors Planning
3546 CONCOURS STREET
ONTARIO, CALIFORNIA 91764
Telephone: 909 . 989 . 9979
Fax: 909 . 483 . 1400
www. hmcarchitects .com

AS BUILT

Key Plan

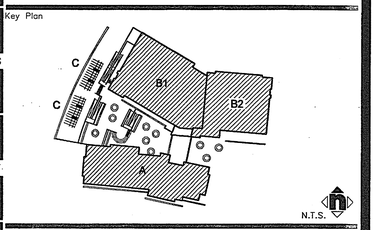

Consultant's Seal

Agency Approval

Project Title

CITY OF RIVERSIDE

ORANGE TERRACE LIBRARY / COMMUNITY CENTER

PLAN CHECK NO. 07-1397

20010 ORANGE TERRACE PARKWAY
RIVERSIDE, CA 92508

HMC ARCHITECTS

No.	Revisions/Submissions	Date:
	Design Development Submittal	12/18/06
	Building Department Submittal	03/29/07
1	Building Department Resubmittal	05/22/07
2	Building Department Resubmittal / QA QC Review	06/22/07

Drawing Title

CASEWORK DETAILS

Architect's Seal

LICENSED ARCHITECT LYNN PURCHIO LANTAGNE NO. C-17259 REN. 02-24-09 STATE OF CALIFORNIA

Designed: SS	Project No. 2340001
Drawn: MM	Scale: AS NOTED
Checked: LP	Drawing No.
Reviewed: RS	A10.12
Date: 06-22-07	Sheet of ##

File Name: N:\2005 Jobs\2340 City of Riverside – Diffenbaugh\001-000\18-CAD\Sheets\A10.12 CASEWORK DETAILS.dwg Jun 21,2007-12:50pm

PLEASE RECYCLE A10.12 CASEWORK DETAILS.DWG

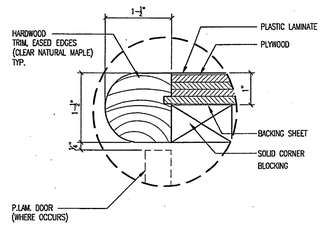

06400-11.DWG

COUNTERTOP EDGE DETAIL — N14

6"=1'-0"

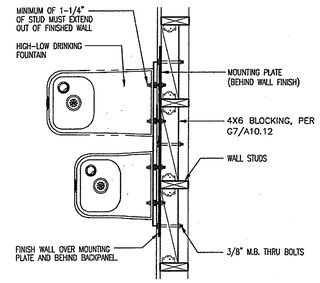

10800-02.DWG

DRINKING FOUNTAIN ATTACHMENT — N11

1"=1'-0"

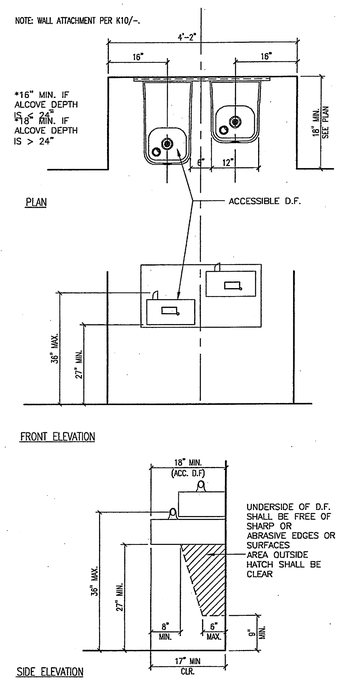

15000-01.DWG

DRINKING FOUNTAIN DETAIL — J7

N.T.S.

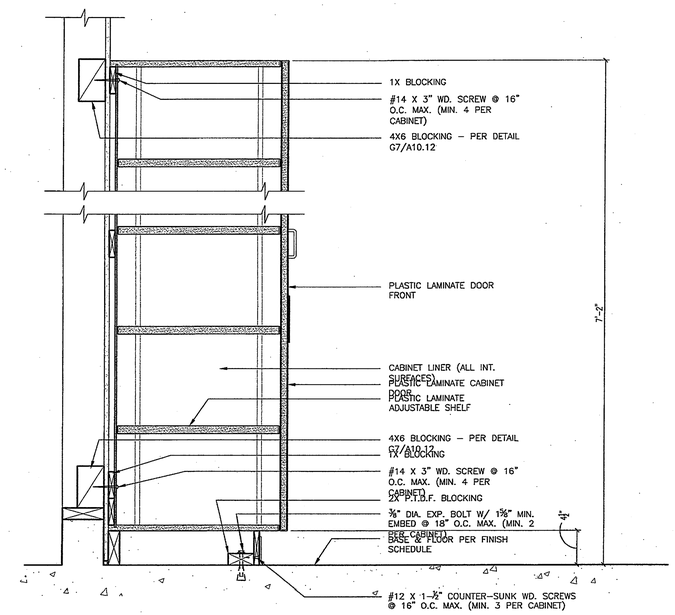

06400-08.DWG

TALL STORAGE CABINET DETAIL — J1

1 1/2" = 1'-0"

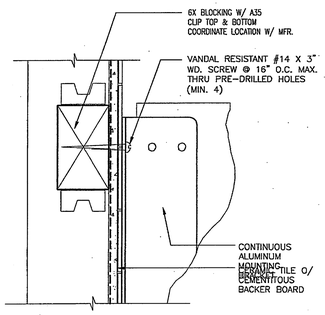

WALL ATTACHMENT

J14

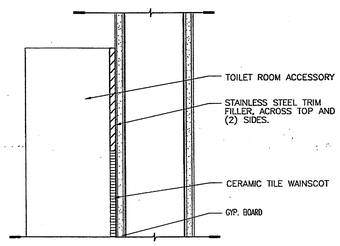

15400-01.DWG

WALL MIRROR DETAIL — E14

3" = 1'-0"

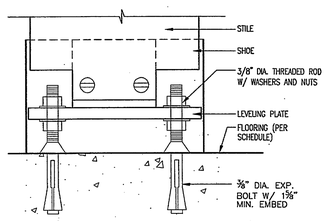

FLOOR ATTACHMENT

10800-01.DWG

TOILET PARTITION DETAILS — E11

3" = 1'-0"

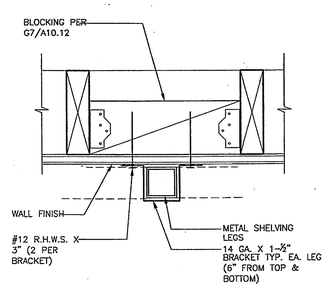

11000-02.DWG

METAL SHELVING ATTACHMENT — E7

1"=1'-0"

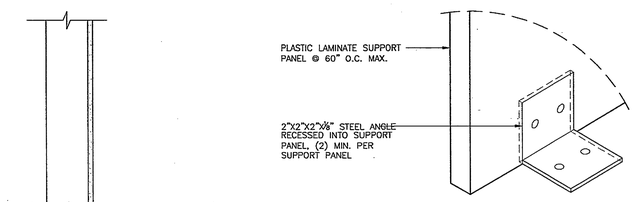

SUPPORT PANEL ATTACHMENT

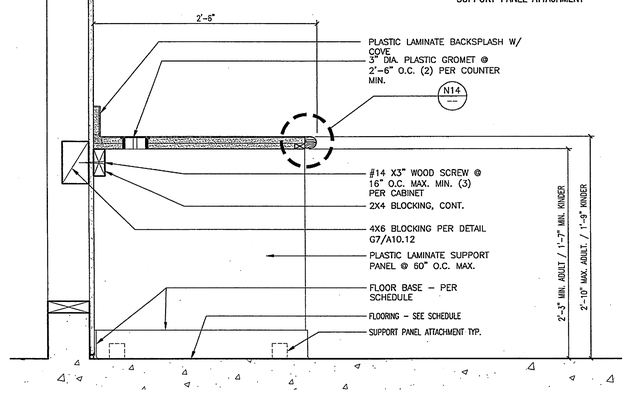

06400-09.DWG

ACCESSIBLE WORKSTATION DETAIL — A1

1 1/2" = 1'-0"

NOTE: PROVIDE BLOCKING PER DETAIL G7/A10.12

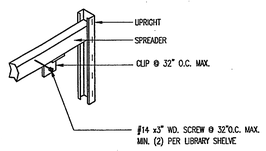

WALL CONDITION

A11000-01.DWG

LIBRARY CASEWORK ANCHORAGE — A14

N.T.S.

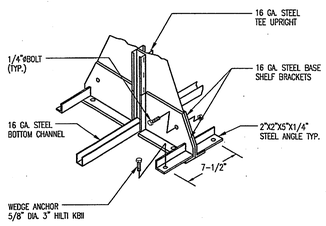

DOUBLE

11000-01.DWG

LIBRARY CASEWORK ANCHORAGE — A11

N.T.S.

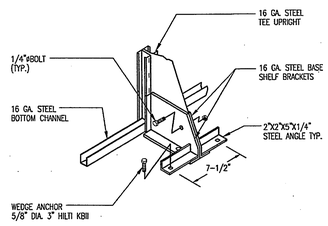

SINGLE

11000-01.DWG

LIBRARY CASEWORK ANCHORAGE — A7

N.T.S.

HMC ARCHITECTS
Architecture Interiors Planning
3546 CONCOURS STREET
ONTARIO, CALIFORNIA 91764
Telephone: 909 . 989 . 9979
Fax: 909 . 483 . 1400
www. hmcarchitects .com

AS BUILT

Key Plan

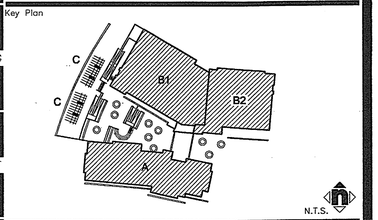

Consultant's Seal

Agency Approval

Project Title

CITY OF RIVERSIDE

ORANGE TERRACE LIBRARY / COMMUNITY CENTER

PLAN CHECK NO. 07-1397

20010 ORANGE TERRACE PARKWAY
RIVERSIDE, CA 92508

HMC ARCHITECTS

No.	Revisions/Submissions	Date:
	Design Development Submittal	12/18/06
	Building Department Submittal	03/29/07
1	Building Department Resubmittal	05/22/07
2	Building Department Resubmittal / QA QC Review	06/22/07

Drawing Title

CASEWORK DETAILS

Architect's Seal

LICENSED ARCHITECT — CHRISTOPHER A. JOHNSON TAYLOR — NO. C-19759 — REN. 02-31-09 — STATE OF CALIFORNIA

Designed: SS	Project No. 2340001
Drawn: MM	Scale: AS NOTED
Checked: LP	Drawing No.
Reviewed: RS	A10.13
Date: 06-22-07	Sheet of ##

File Name: C:\Documents and Settings\xliu\Local Settings\Temp\AcPublish_3956\A10.13 CASEWORK DETAILS.dwg Jun 21,2007-12:49pm

PLEASE RECYCLE A10.13 CASEWORK DETAILS.DWG