DRAWING NUMBER OCTP 9

PLAN HOLD CORPORATION • IRVINE, CALIFORNIA
REORDER BY NUMBER 075AR

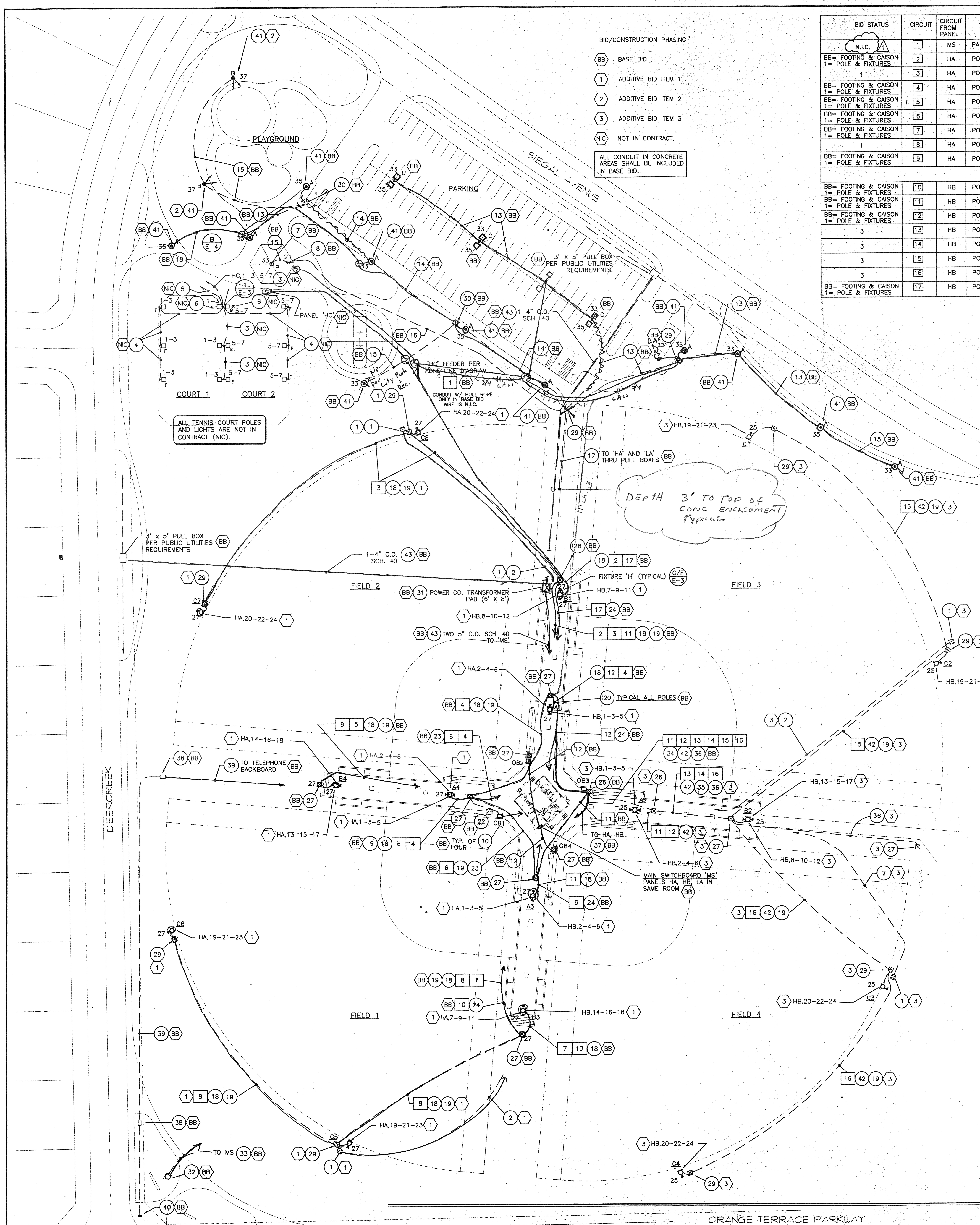

BID/CONSTRUCTION PHASING

- (BB) BASE BID
- (1) ADDITIVE BID ITEM 1
- (2) ADDITIVE BID ITEM 2
- (3) ADDITIVE BID ITEM 3
- (NIC) NOT IN CONTRACT.

ALL CONDUIT IN CONCRETE AREAS SHALL BE INCLUDED IN BASE BID.

BID STATUS	CIRCUIT	CIRCUIT FROM PANEL	ITEM	LOAD (amps)	OCP (amps)	CONDUIT (inches)	WIRE (copper)	GROUND	LENGTH	V.D. (%)
N.I.C. ⚠1	1	MS	PANEL 'HC'	40	60	2	4 #4	8	660	.35
BB= FOOTING & CAISON 1= POLE & FIXTURES	2	HA	POLE B1 (FLD 2)	24	30	1 1/2	3 #6	8	280	.1
1	3	HA	POLE C7/C8 (FLD 2)	30	40	1 1/2	3 #4	6	440	1.2
BB= FOOTING & CAISON 1= POLE & FIXTURES	4	HA	POLE A1/A4 (FLD 2)	18	30	1 1/2	3 #8	10	130	<1
BB= FOOTING & CAISON 1= POLE & FIXTURES	5	HA	POLE B4 (FLD 2)	24	30	1 1/2	3 #6	8	220	<1
BB= FOOTING & CAISON 1= POLE & FIXTURES	6	HA	POLE A3/A4 (FLD 1)	18	30	1 1/2	3 #10	10	70	<1
BB= FOOTING & CAISON 1= POLE & FIXTURES	7	HA	POLE B3 (FLD 1)	24	40	1 1/2	3 #6	8	190	<1
1	8	HA	POLE C5/C6 (FLD 1)	30	50	1 1/2	3 #4	6	400	<1
BB= FOOTING & CAISON 1= POLE & FIXTURES	9	HA	POLE B4 (FLD 1)	24	40	1 1/2	3 #6	8	220	<1
BB= FOOTING & CAISON 1= POLE & FIXTURES	10	HB	POLE B3 (FLD 4)	24	30	1 1/2	3 #6	8	190	<1
BB= FOOTING & CAISON 1= POLE & FIXTURES	11	HB	POLE A3/A2 (FLD 4)	18	30	1 1/2	3 #8	8	100	<1
BB= FOOTING & CAISON 1= POLE & FIXTURES	12	HB	POLE A1/A2 (FLD 3)	24	30	1 1/2	3 #8	8	80	<1
3	13	HB	POLE B2 (FLD 4)	24	30	1 1/2	3 #8	8	220	<1
3	14	HB	POLE B2 (FLD 3)	30	50	1 1/2	3 #6	8	220	<1
3	15	HB	POLE C1/C3 (FLD 3)	33	50	1 1/2	3 #4	6	460	1.4
3	16	HB	POLE C3/C4 (FLD 4)	30	50	1 1/2	3 #4	6	440	1.4
BB= FOOTING & CAISON 1= POLE & FIXTURES	17	HB	POLE B1 (FLD 3)	30	50	1 1/2	3 #4	6	280	1.4

UNDERGROUND CONDUIT NOTES:

A. PROVIDE RED CONCRETE COVER (PER ELECTRICAL SPECIFICATIONS)

OVER ALL UNDERGROUND CONDUITS:

1. POWER COMPANY 2-4" C.O. TO TRANSFORMER PAD AND 2-5" C.O. FROM PAD TO MAIN SWITCHBOARD. 2-5" C.O. UNDER BUILDING TO BE FULLY CONCRETE ENCASED.
2. ALL 480 VOLT CONDUITS (CIRCUITS)

B. ALL CONDUITS SHALL BE BURIED FULL 36" BELOW GRADE MINIMUM.

ALL WIRE COPPER THHN/THWN RATED.
CAPACITY:
UP TO 100 AMPS = 75 DEGREE C

ELECTRICAL SYMBOLS LIST

SYMBOL	DESCRIPTION
	WALKWAY STANDARD – TYPE 'A'
	AREA STANDARD – TYPE 'B'
	PARKING STANDARD – TYPE 'D'
	NEW BALLFIED LIGHTING POLE WITH BACKLIGHT
	INDICATES PLAN NOTE NUMBER "1", SEE PLAN
	DENOTES DETAIL "A", SHEET "E-1"
A-1,3	HOMERUN TO PANEL "A", CIRCUITS #1 AND #3
	CONDUIT/WIRE UNDER SLAB OR BELOW GRADE, 3/4" MINIMUM
	CONDUIT/WIRE CONCEALED ABOVE CEILING OR IN WALLS
—EX—	EXISTING CONDUIT/WIRE UNDER SLAB OR BELOW GRADE
	CONDUIT STUB OUT, 3/4" MINIMUM – SEE PLANS FOR NOTES
BB	BID ITEM PER SHT. E-1
	JUNCTION BOX
	120V, DUPLEX 20A RECEPTACLE AT +16" MAXIMUM (OR AS NOTED)
	PULL BOX FLUSH IN GRADE. BROOKS #PB1 OR AS NOTED ON PLANS
W.P.	WEATHER PROOF
PROVIDE	FURNISH/INSTALL/CONNECT
E.C.	ELECTRICAL CONTRACTOR
GFI	GROUND FAULT INTERRUPT RECEPTACLE
N.I.C.	NOT IN CONTRACT
C.O.	CONDUIT ONLY (WITH STEEL PULL WIRE)
EX	EXISTING
G	GROUND

SPECIAL NOTES

A. ALL PANEL SCHEDULES TO MATCH EXACTLY FIELD INSTALLATION (AS-BUILT) CONDITIONS. PROVIDE "CORRECT" PANEL SCHEDULE INSIDE PANEL WITH CORRECT CIRCUITS, ELECTRICAL LOADS AND FEEDER SIZE AND WIRE TYPE TO PANEL. (ie: NO. 3/0 COPPER, THHN).

B. ALL PLUG-IN OUTLET DEVICES WITH GROUND OUTLET SHALL HAVE GROUND CONNECTION AT TOP OF DEVICE + 15" TO CENTER TO TOP OUTLET.

C. CONTRACTOR SHALL NOT INSTALL MORE WIRES IN A CONDUIT THAN SHOWN ON PLANS. NUMBER OF WIRES IN A CONDUIT ARE BASED ON DERATING VALUES IN NATIONAL ELECTRICAL CODE. IF CONTRACTOR ELIMINATES VARIOUS CONDUITS SHOWN ON PLANS AND INSTALLS ADDITIONAL WIRES IN A CONDUIT, WITHOUT PRIOR APPROVAL, THAN IT WILL BE CORRECTED AT CONTRACTOR COST.

D. ALL OVERCURRENT PROTECTION DEVICES (CIRCUIT BREAKERS, SWITCHES) SHALL BE U.L. LISTED FOR 75° C. TERMINATIONS. ALL WIRE RATING AMPACITIES BASED ON 75° C. (THHN/THWN) COPPER. NO ALUMINUM WIRE ALLOWED.

UTILITY GENERAL NOTES

A. UTILITY POINTS OF SERVICE AND WORK / MATERIAL SHOWN ARE BASED ON PRELIMINARY INFORMATION ONLY BY THE UTILITY COMPANIES AND ARE FOR BID PURPOSES ONLY.

B. LOCATIONS OF UTILITIES SHOWN ARE APPROXIMATE AND CONTRACTOR SHALL EXERCISE EXTREME CAUTION IN EXCAVATING AND TRENCHING ON THIS SITE TO AVOID EXISTING DUCTS, PIPING OR CONDUITS, ETC., AND TO PREVENT HAZARD TO PERSONNEL AND/OR DAMAGE TO EXISTING UNDERGROUND UTILITIES OR STRUCTURES WHETHER OR NOT SHOWN AND INSTALLED BY ANY OTHER CONTRACTS. THE ENGINEER IS NOT RESPONSIBLE FOR THE LOCATION UNDERGROUND UTILITIES OR STRUCTURES WHETHER OR NOT SHOWN OR DETAILED AND INSTALLED BY ANY OTHER CONTRACTS. THE CONTRACTOR SHALL IMMEDIATELY NOTIFY THE ENGINEER SHOULD SUCH UNIDENTIFIED CONDITIONS BE DISCOVERED. THESE DRAWINGS AND SPECIFICATIONS DO NOT INCLUDE THE NECESSARY ELEMENTS FOR CONSTRUCTION SAFETY.

C. CONTRACTOR SHALL COORDINATE WITH UTILITY COMPANY FOR FINAL AND EXACT WORK / MATERIAL REQUIREMENTS AND CONSTRUCT TO UTILITY COMPANY ENGINEERING PLANS AND SPECIFICATIONS ONLY. CONTRACTOR SHALL FURNISH AND INSTALL ALL CONDUIT, PULL WIRES, CABLES, PULLBOXES, CONCRETE ENCASEMENT OF CONDUIT (IF REQUIRED), TRANSFORMER PAD, BARRIERS, POLE RISERS, TRENCHING, BACKFILL, PAY ALL UTILITY COMPANY FEES AND INCLUDE ALL REQUIREMENTS IN SCOPE OF WORK.

D. CALL "UNDERGROUND ALERT" BEFORE YOU DIG:
NORTHERN CALIFORNIA: 1-800-642-2444
SOUTHERN CALIFORNIA: 1-800-422-4133

E. UTILITY CO. CONTACTS:

POWER:
RIVERSIDE PUBLIC UTILITY
3900 MAIN ST. 4 th FLOOR
RIVERSIDE, CA 92522
MR. JULIAN CALDENAS
(909)782-5937

TELEPHONE:
GENERAL TELEPHONE COMPANY
MR. RON CASHMER
(909) 929-9412

PLAN NOTES:

1. 12" X 9" CONCRETE PULL BOX FOR FUTURE SCOREBOARD.
2. 1 1/4" C.O. TO RESPECTIVE 'OB' BOX. (FUTURE SCOREBOARD CONTROL WIRE) + 1 1/4" C.O. TO PANEL 'LA' (FUTURE SCORE BOARD 30A, 120V POWER).
3. 1" C. 4 #12 + G.
4. 3/4" C. 2 #12 + G.
5. 3/4" C. 10 #12 (TO T AND C CONTROL SYSTEM PER DETAIL I, E2 IN 'HC'.)
6. WARNING DEVICES (DETAIL I, E2 AND G, E-2).
7. PAIR CONDUITS TO RUN CONCEALED WITHIN POSTS. PAINT OUT ALL EXPOSED J-BOXES AND EXPOSED CONDUIT TO MATCH SURFACE ATTACHED TO.
8. PROVIDE 120V, DUPLEX GFI, OUTLET AT + 30". SEE DETAIL.
9. (NOTE NOT USED.)
10. 'OB' CABINET (TYPICAL OF 4) PER DETAIL E, E3. PROVIDE ALL CIRCUITS, AND CONDUITS PER DETAIL. NOTE: DB1 HAS 50A OUTLET.
11. 2" C.O. STUB OUT AT 'HC' LOCATION.
12. 2 – 2" C.O. STUB OUTS FROM 'MS' AND 2-1" C.O. FROM PANEL 'LA' IN ELECTRIC ROOM (SPARE) INTO PULL BOX.
13. 3/4" C. 3 #10 + 1 #10 G.
14. 1" C. 4 #8 + 1 #8 G.
15. 3/4" C. 2 #10 + 1 #10 G.
16. 1" C. 2 #10 (33), 2 #8 (LA, 21) + 1 #8 G.
17. 1" C. 4 #8 + 1 #8 G (HA, 33-35-37) + 2 #8 (LA, 21).
18. 2 #8 + 1 #10 G, CIRCUIT HA, 27 TO RUN IN SAME BALLFIELD LIGHTING CONDUITS TO PANEL 'HA'.
19. 1 1/2" C.O. (SPARE).
20. 1" C.O. (SPARE) INTO EACH POLE FROM ADJACENT PULL BOX. (TYPICAL ALL POLES.)
21. (NOTE NOT USED.)
22. TWO 1" C.O. INTO DB1.
23. SAME AS NOTE 18 EXCEPT 3 #8 + 1 #8 G (HA, 25-27).
24. 1 1/2" C.O.
25. 6 – 1 1/2" C.O. TO 'HB'.
26. PULL BOX NO. 4 X (TRAFFIC LID). SET AS DIRECTED IN FIELD.
27. PULL BOX NO. 2 X WITH TRAFFIC LID.
28. PULL BOX NO. 3 X WITH TRAFFIC LID.
29. PULL BOX NO. 1 X WITH TRAFFIC LID.
30. PULL BOX NO. 1 WITH TRAFFIC LID.
31. SET PAD PER POWER CO. REQUIREMENTS. PROVIDE BARRIER POSTS (4) PER POWER CO. REQUIREMENTS.
32. HOOK-UP TO 10 H.P., 480V, 3Ø, 4W BOOSTER PUMP FOR IRRIGATION. DISCONNECT /CONTROLLER PROVIDED BY PUMP MUNUFACTURER. VERIFY EXACT HOOK-UP.
33. 1 1/4" C., 3 #6 + 1 #6 G. TO MAIN SWITCHBOARD.
34. CIRCUITS 11 12 13 AND (18) IN ONE 3 " C. CIRCUITS 14 15 16 IN ONE 3" C.
35. CIRCUITS 13 14 16 AND (18) IN ONE 3" C.
36. TWO 2" C.O. 'SPARE'
37. CONDUIT ONLY IN BASE BID.
38. 3' X 5' X 4' PULL BOX PER TELEPHONE CO. REQUIREMENTS.
39. 1-4" C.O. (TELEPHONE).
40. 1-4" C.O. TO PROPERTY LINE. INTERCEPT EXISTING GTE 1-4" DUCT.
41. INSTALL LIGHTING POLES IN CONCRETE PAVING. OUTSIDE DGE OF POLE SHOULD BE 12" FROM EDGE OF PAVING. REFER TO DETAILS 'A' AND 'B' ON SHEET E-2.
42. 2 #8 + 1 #10 G, CIRCUIT HB, 25 TO RUN IN SAME BALLFIELD LIGHTING CONDUITS TO PANEL 'HB'.
43. VERIFY DEPTH WITH UTILITY COMPANY.

ELECTRICAL ASBUILT
[signature] 9-19-00
M. WILSON CO. CONTRACTORS, INC.
2605 Sierra Way
La Verne, CA 91750

⚠1 REPLACE ENTIRE SHEET FOR ADDENDUM #1

NORTH

Electrical Site Plan (A)

1" = 40' – 0"

8/26/99

98-216-1484
REEDCORP ENGINEERING
CONSULTING ELECTRICAL ENGINEERS
2061 Business Center Drive, Suite 110
Irvine, CA 92612
(949) 752-1278 FAX: (949) 752-1287

RHA
LANDSCAPE ARCHITECTS PLANNERS, INC.
3612 MISSION INN AVE
RIVERSIDE, CALIFORNIA
92501
LIC. #1512
PH. (909) 781-1930
FAX (909) 686-8091

CLIENT:
McMILLIN COMPANIES
2727 Hoover Avenue
National City, CA 91950

ELECTRICAL AS BUILT [signature] 9-19-00
M. Wilson Co. Contractors, Inc.
2605 Sierra Way
La Verne CA. 91750

PROJECT:
ORANGE TERRACE COMMUNITY PARK
RIVERSIDE, CA

© R H A Landscape Architects - Planners, Inc. expressly reserves its common law copyright and other property rights in these plans. These plans are not to be reproduced, changed or copied in any form or manner whatsoever nor are they to be

REVISIONS	DATE	BY
⚠1 ADDENDUM #1	9/30/99	DSG

REGISTERED LANDSCAPE ARCHITECT
RANDOLPH HLUBIK NO. 1512
Signature
7/31/01
Renewal Date
Date
STATE OF CALIFORNIA

SHEET TITLE
ELECTRICAL PLAN

DESIGNED	RR
DRAWN	MR
CHECKED	RR
DATE	8/26/99
SCALE	1"=40'-0"
JOB NO.	98138

SHEET
E-1
OF 23 SHEETS

DATE PLOTTED: 9/30/99

DRAWING NUMBER
OCTP 5

PLAN HOLD CORPORATION • IRVINE, CALIFORNIA
REORDER BY NUMBER 075AR
POSITION EDGE OF PRINT ON THIS LINE

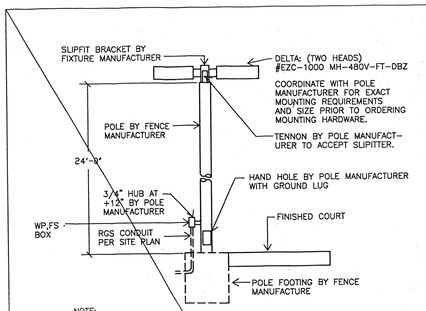

(Tennis) Fixture 'E' (D)
NIC N.T.S.

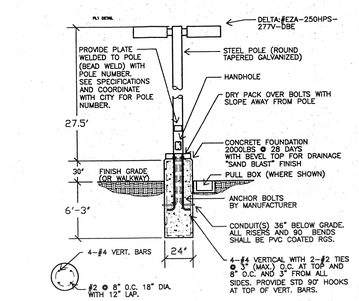

(Parking Lot) Fixture 'C' (C)
N.T.S.

NOTE:
A. SEE SPECICFICATIONS FOR SPARE LAMPS AND BALLASTS FOR ALL EXTERIOR POLE MOUNTED LIGHT FIXTURES.
B. SEE SPECIFICATIONS FOR ADDITIONAL POLE INFORMATION FOR FIXTURES A,B.

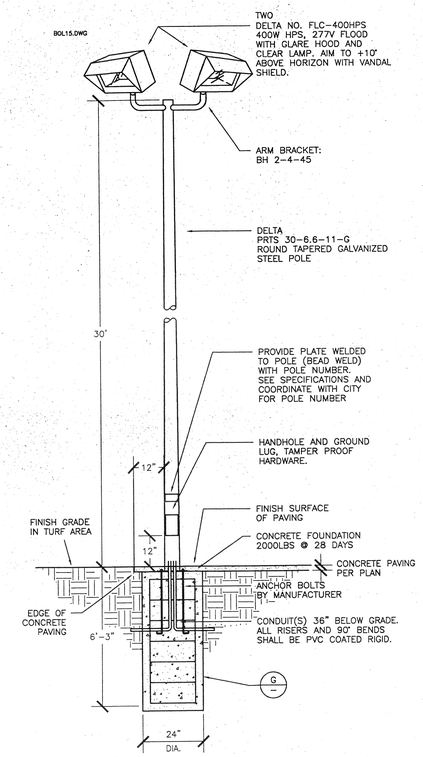

(Play Ground) Fixture 'B' (B)
N.T.S.

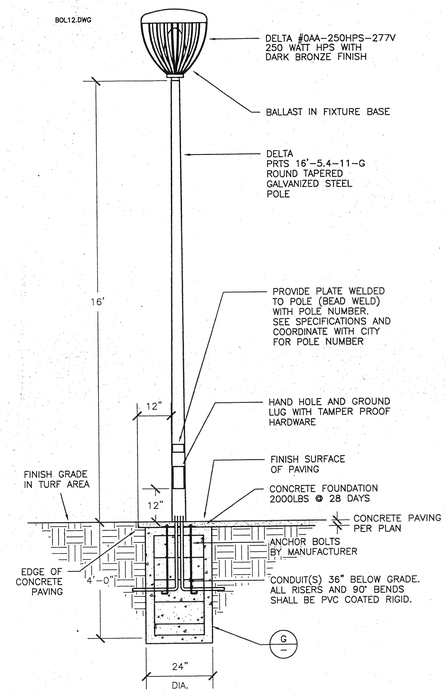

(Walkway) Fixture 'A' (A)
N.T.S.

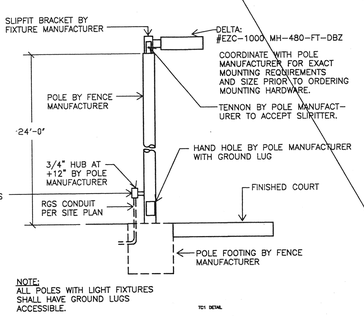

(Tennis) Fixture 'F' (E)
NIC N.T.S.

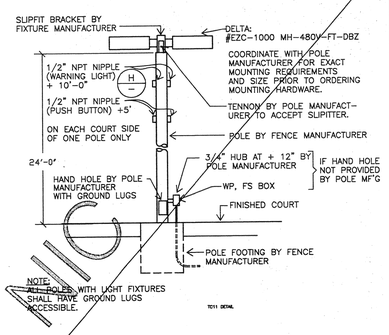

(Tennis) Fixture 'G' (F)
NIC N.T.S.

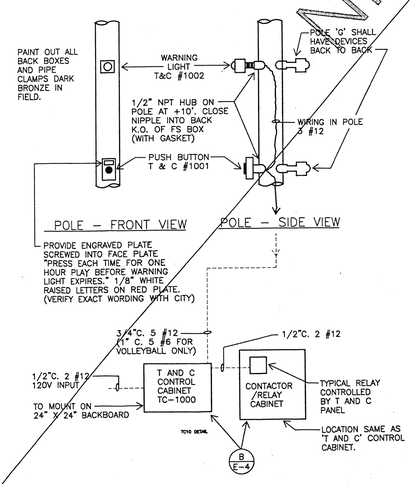

T AND C SYSTEM OPERATION AND SPECIFICATIONS:

A. CONTROL PANEL WITH:

1. 24 HOUR TIME CLOCK TO DETERMINE WHEN THE SYSTEM WILL BE IN OPERATION. SET HOURS PER CITY REQUIREMENTS.
2. ONE HOUR TIMERS TO DETERMINE THE LENGTH OF TIME THE LIGHTS WILL BE ON EACH TIME THE OPERATOR PRESSES THE TC 1001 PUSH BUTTON "ON" EACH TIME THE PLAYER PRESSES THE PUSH BUTTON "ON" THE TIME WILL BE EXTENDED BY ONE HOUR. PILOT LIGHT ENERGIZES AND WARNS BEFORE THE LIGHTS ARE TO GO OUT.
3. CONTROL RELAYS TO DE-ENERGIZE THE LIGHTING CONTACTORS WHEN THE 24 HOUR TIMER SHUTS DOWN THE SYSTEM. THIS ALLOWS THE ONE HOUR TIMER TO COMLETE ITS CYCLE READY TO START OPERATION THE NEXT DAY WITHIN TIME CLOCK SETTING.
4. TERMINAL BLOCKS FOR ELECTRICAL CONTACTORS TO HOOK-UP.

   TC 1000-4 CABINET TO MOUNT ON A 24"X24" BACKBOARD.
5. MOUNT T AND C PANEL INSIDE AS SHOWN.

B. EXTERNAL DEVICES

1. THE TC 1001 IS "ON-OFF" PUSH BUTTON STATION TO MOUNT ON POLE.
2. THE TC 1002 IS WARNING PILOT LIGHT. THE PILOT LIGHT WILL LIGHT APPROXIMATELY ONE MINUTE (OR AS SET) BEFORE THE ONE HOUR TIMER (COURT LIGHTS) ARE ABOUT TO TIME OUT. WARNING LIGHT WILL LIGHT ONLY FOR THE TIME SET ON THE TIME DELAY IN THE CONTROL CABINET.
3. ONE TC 1001 AND ONE TC 1002 ARE REQUIRED FOR EACH COURT (TOTAL OF 2)

C. T AND C INDUSTRIES
1121 NORTH CEDAR STREET
GLENDALE, CA 91207
818/240-3600
FAX: 818/547-9359

D. SYSTEM TO OPERATE TWO COURTS INDEPENDENTLY.

TC2 DETAIL

(Tennis Courts) T & C Control Detail (I)
NIC N.T.S.

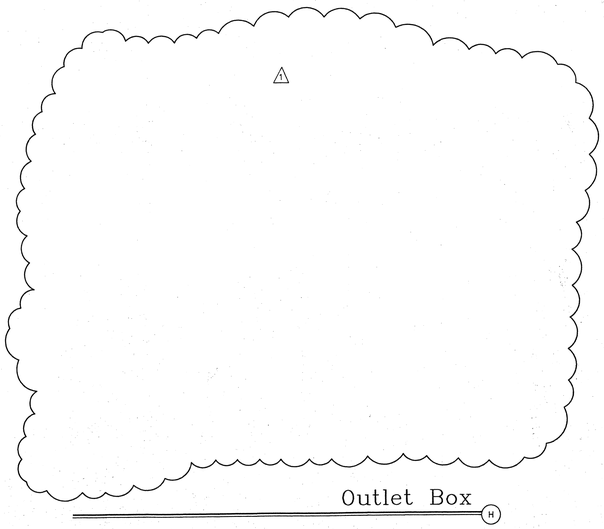

Outlet Box (H)

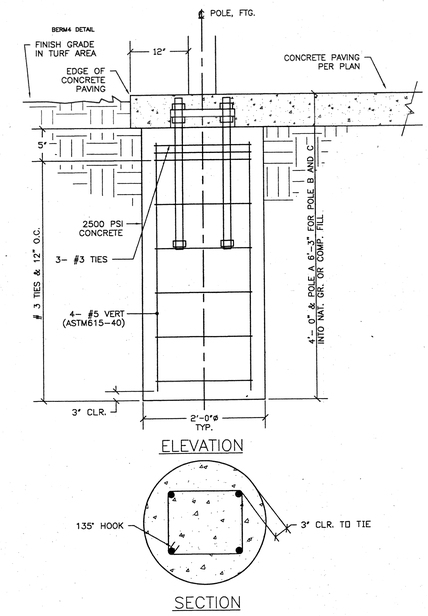

Typical Pole Footing Detail (G)
N.T.S.

8/26/99

98-216-1454

REEDCORP ENGINEERING
CONSULTING ELECTRICAL ENGINEERS
2061 Business Center Drive, Suite 110
Irvine, CA 92612
(949) 752-1278 FAX: (949) 752-1287

RHA LANDSCAPE ARCHITECTS PLANNERS, INC.
3612 MISSION INN AVE
RIVERSIDE, CALIFORNIA 92501
LIC. #1512
PH. (909) 781-1930
FAX (909) 686-8091

CLIENT:
McMILLIN COMPANIES
2727 Hoover Avenue
National City, CA 91950

PROJECT:
ORANGE TERRACE COMMUNITY PARK
RIVERSIDE, CA

REVISIONS	DATE	BY
1 ADDENDUM #1	9/30/99	DSG

REGISTERED LANDSCAPE ARCHITECT
STATE OF CALIFORNIA

SHEET TITLE
ELECTRICAL DETAILS

DESIGNED	RR
DRAWN	MR
CHECKED	RR
DATE	8/26/99
SCALE	AS NOTED
JOB NO.	98138

SHEET
E-2
OF 23 SHEETS

DATE PLOTTED: 9/30/99

DRAWING NUMBER
OTCP 3B
PLAN HOLD CORPORATION • IRVINE, CALIFORNIA
REORDER BY NUMBER 075AR

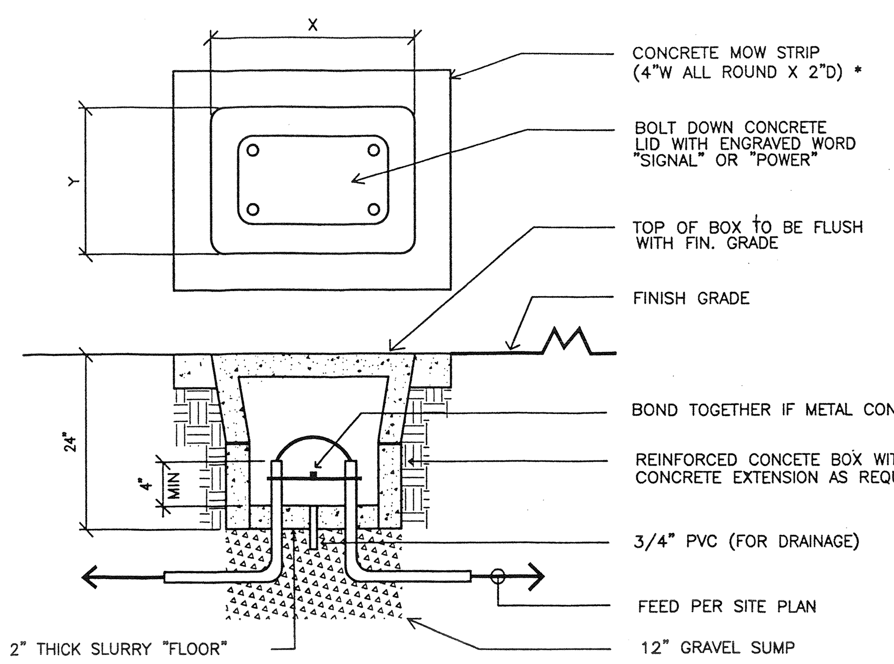

* NOTE: WHERE VAULT BOX IS ADJACENT TO CONCRETE WALK. EXTEND MOWSTRIP TO CONNECT WITH WALK.

PULL BOX DETAIL
NTS

PB3 DETAIL

CONCRETE VAULT BOX SCHEDULE

1	NO. 1 19" X 12" (14" X 8" I.D.) X 12" DEEP – BROOKS NO. 1PB.
1X	NO. 1X PULLBOX NO. 1 WITH EXTENSION (24" DEEP) – BROOKS NO. 36 PBC
2	NO. 2 18" X 28" (12 1/2" X 22" I.D.) X 12" DEEP – BROOKS NO. 38 PBC
2X	NO. 2X 22" X 35" (17" X 30" I.D.) X 29" DEEP WITH BOTTOM – BROOKS NO. G6PB.
3X	NO. 3X 32" X 44" (24" X 36" I.D.) X 24" DEEP – BROOKS NO. 100 FHH.
4X	NO. 4X 32" X 44" (24" X 36" I.D.) X 47" DEEP WITH BOTTOM – BROOKS NO. 100 DAH.
5X	NO. 5X 38" X 6" (30" X 42" I.D.) X 48" DEEP WITH BOTTOM – BROOKS NO. 200 FPB.

ALL WITH BOLT DOWN CONCRETE LID OR "TL" (STEEL TRAFFIC LID) WHERE SHOWN ADJUSTED ENGRAVED "ELECTRICAL". TRAFFIC LIDS FOR BOXES NO. 3 AND 4 SHALL BE TWO SECTION. TRAFFIC LID FOR BOX NO. 5 SHALL BE TWO SECTION WITH COVER HOLD ASSEMBLY.

ALL BOXES TO SET IN 12" COMPACTED GRAVEL BASE WIDTH X LENGTH OF BOX.

Pull Box Detail (B)

N.T.S.

BALLFIELD LIGHTING GENERAL NOTES–NEW SITE

A. STAKE OUT EXACT LOCATION OF POLES AND CONDUIT ROUTING WITH CITY PRIOR TO ANY WORK. ANY LOCATION NOT WITHIN 24" OF LOCATION SHOWN ON PLAN SHALL BE NOTIFIED TO ENGINEER AND LIGHTING MANUFACTURER IMMEDIATELY AND PRIOR TO WORK.

B. VERIFY ALL POLE AND OUTLET LOCATIONS WITH THE CITY BEFORE COMMENCING WORK. POLE AND OUTLET LOCATIONS AND CONDUIT RUNS SHOWN DIAGRAMMATICALLY AND MAY NEED TO BE CHANGED TO SUIT FIELD CONDITIONS. (VERIFY WITH CITY) SEE NOTE "A".

C. TRENCHING NOTES

1. TRENCH AROUND PLAYING FIELDS AND NOT ACROSS INTO OUTFIELD PLAYING AREAS EXCEPT AS INDICATED OR UNAVOIDABLE.

D. CONTRACTOR TO VISIT EXISTING SITE AND VERIFY ALL EXISTING CONDITIONS.

E. CONTRACTOR TO OBTAIN ALL PERMITS AND INSPECTIONS AS REQUIRED AT NO ADDITIONAL COST TO CITY.

F. ALL MATERIAL SHALL BE DELIVERED TO THE SITE NEW, IN THEIR ORIGINAL UNBROKEN PACKAGES BEARING APPROVAL BY U.L., NEMA, NBFU, OR ANY OTHER APPROPRIATE AGENCY.

G. PROVIDE TYPE WRITTEN DIRECTORY (LAMINATED AND SEALED) INSIDE EACH PANEL DOOR.

H. ALL WORK SHALL BE COMPLETED IN STRICT ACCORDANCE WITH THE NATIONAL ELECTRICAL CODE (1993 EDITION), AND ALL APPLICABLE STATE, COUNTY, AND LOCAL CODES APPLYING TO THE PROPOSED CONSTRUCTION. IN THE EVENT OF A CONFLICT BETWEEN THE ABOVE AND THESE PLANS AND SPECIFICATIONS, THE RESTRICTIVE SHALL GOVERN.

I. CONTRACTOR SHALL MAINTAIN ONE SET OF "AS-BUILT" PLANS MARKED IN RED SHOWING EVERY CHANGE, ADDITION, DELETION OR MODIFICATION INCLUDING EXACT ROUTING OF CONDUITS. THIS "AS-BUILT" SET SHALL BE TRANSFERRED TO A REPRODUCIBLE FORM AND SUBMITTED TO THE CITY BEFORE FINAL ACCEPTANCE OF WORK.

J. CONTRACTOR SHALL PROVIDE A COMPLETE AND FUNCTIONING ELECTRICAL SYSTEM MEETING THE LETTER AND THE INTENT OF THESE PLANS AND SPECIFICATIONS.

K. POLES STORED ON SITE SHALL BE HANDLED (INCLUDING DELIVERY AND SETTING) WITH APPROVED STRAPS TO AVOID DAMAGE TO GALVANIZING. ACCEPT POLES FROM MANUFACTURER'S DELIVERY IN THE PRESENCE OF CITY VERIFYING ANY DAMAGE. POLES STORED SHALL NOT SET ON GRADE EACH POLE TO SET ON WOOD BASES AND TURNED 180 DEGREES EVERY 48 HOURS MINIMUM. TOUCH UP PAINTING (GALVANIZING) SHALL BE PER POLE MANUFACTURER'S REQUIREMENTS.

L. SEE ELECTRICAL SPECIFICATIONS FOR ADDITIONAL REQUIREMENTS.

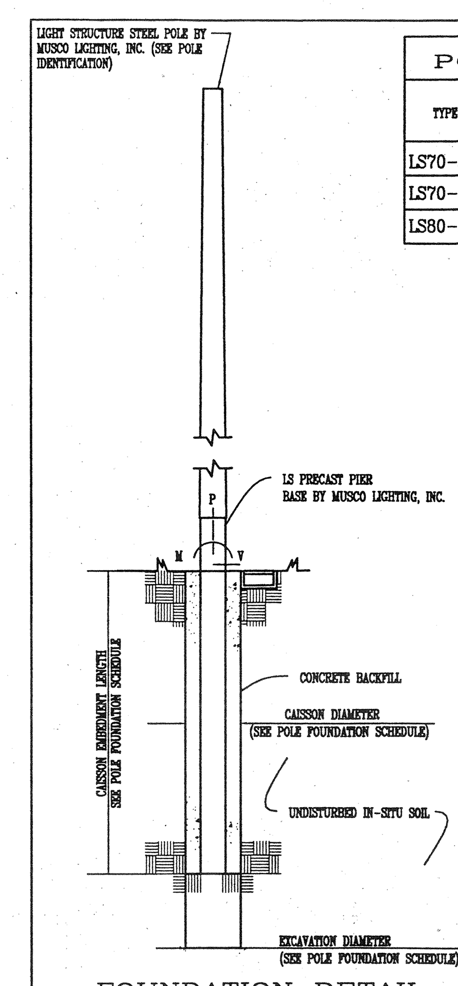

FOUNDATION DETAIL

DETAIL FOLEY

POLE FOUNDATION SCHEDULE

TYPE	FORCES (MAXIMUM) MOMENT (M) KIP-FT	SHEAR (V) KIPS	VERTICAL (P) KIPS	CAISSON DIAMETER INCH	EMBEDMENT FEET
LS70–A	64.26	1.303	1.558	30"	12'–0"
LS70–B	70.6	1.372	1.813	30"	12'–0"
LS80–B	180.26	2.867	4.031	36"	16'–0"

POLE IDENTIFICATION

LOCATION MARK	TYPE	FIXTURE CONFIGURATION (FIXTURES PER CROSSARM)	FIXTURE EPA
A1,A2	LS70–B	10(3+3/2+2)	32.0
A3–A4	LS70–A	8(2+2/2+2)	24.0
B1,B2	LS80–B	26(7+7/6+6)	80.0
B3,B4	LS80–B	24(6+6/6+6)	72.0
C1,C2	LS70–B	8(4+4)	32.0
C3–C8	LS70–A	7(4+3)	28.0

GENERAL NOTES

GENERAL

ALL CONSTRUCTION AND WORKMANSHIP SHALL CONFORM TO THE UNIFORM BUILDING CODE, 1994 EDITION.

WIND :70 MPH (EXPOSURE C)

REFERENCE POLE LOCATION DRAWING FOR ACTUAL POLE PLACEMENT AND SITE LOCATION.

THE CONTRACTOR IS SOLELY RESPONSIBLE FOR ALL CONSTRUCTION PROCEDURES AND SAFETY CONDITIONS AT THE JOB SITE.

SOIL DESIGN PARAMETERS

ALLOWABLE END BEARING SOIL PRESSURE: 1,000 PSF
ALLOWABLE LATERAL PASSIVE SOIL BEARING PRESSURE: 200 PSF/FT

REFERENCE CHAPTER 18, SECTION 1806.7.2.1 AND TABLE 18–I–A OF THE 1994 EDITION OF THE UNIFORM BUILDING CODE.

DESIGN SOIL PARAMETERS ARE AS NOTED. ACTUAL ALLOWABLE SOIL PARAMETERS MUST BE VERIFIED ON SITE.

ENCOUNTERING SOIL FORMATIONS THAT WILL REQUIRE SPECIAL DESIGN CONSIDERATIONS OR EXCAVATION PROCEDURES MAY EXIST. POLE FOUNDATIONS MAY NEED TO BE REANALYZED ACCORDING TO THE SOIL CONDITIONS THAT EXIST.

IF ANY DISCREPANCIES OR INCONSISTENCIES ARISE NOTIFY THE ENGINEER OF SUCH DISCREPANCIES. FOUNDATIONS WILL THEN BE REVISED ACCORDINGLY.

ALL PIERS AND CONCRETE BACKFILL MUST BEAR ON AND AGAINST FIRM, UNDISTURBED SOIL.

ALL EXCAVATION MUST BE FREE OF LOOSE SOIL, AND DEBRIS PRIOR TO FOUNDATION INSTALLATION AND PLACEMENT OF CONCRETE BACKFILL. REFER TO GEOTECHNICAL REPORT FOR SPECIAL REQUIREMENTS. CASING MAY BE REQUIRED IF CAVING OCCURS.

ALL EXCAVATIONS MUST BE FREE OF WATER OR CONCRETE SHALL BE PLACED WITH A TREMIE PIPE IN ACCORDANCE WITH ACI STANDARD 304.

CONCRETE BACKFILL

CONCRETE BACKFILL SHALL HAVE A MINIMUM ULTIMATE COMPRESSIVE STRENGTH AT 28 DAYS OF 3,000 PSI. SPECIAL INSPECTION IS NOT REQUIRED.

USE TYPE II PORTLAND CEMENT OR AS RECOMMENDED BY THE GEOTECHNICAL ENGINEER.

MIX IN CONFORMANCE WITH ASTM C–94. 1" MAX. AGG. SIZE)

AGGREGATES PER ASTM C–33.

PLACE CONCRETE IMMEDIATELY AFTER COMPLETION OF EXCAVATION AND INSPECTION BY THE GEOTECHNICAL ENGINEER AND THE GOVERNING BUILDING AUTHORITY. NO EXCAVATIONS SHALL BE LEFT UNPROTECTED OR OPEN OVERNIGHT.

CONCRETE SHALL BE PLACED IN ONE CONTINUOUS OPERATION (NO CONSTRUCTION JOINT) WITH SPECIAL EQUIPMENT WITH A MAXIMUM FREEFALL OF 5 FT AND TO PREVENT CONCRETE FROM STRIKING THE SIDES OF THE EXCAVATION. VIBRATE TOP 5 FT.

CONCRETE BACKFILL SHALL ATTAIN A MINIMUM STRENGTH OF 2,000 PSI PRIOR TO POLE INSTALLATION.

MISCELLANEOUS

FIXTURES MUST BE LOCATED TO MAINTAIN 10'–0" MINIMUM HORIZONTAL CLEARANCE FROM ANY OBSTRUCTION.

POLES, FIXTURES, PRECAST BASES, ELECTRICAL ITEMS, PLATFORMS, SPECIFICATIONS, AND INSTALLATION PER MUSCO LIGHTING, INC.

FIXTURE: EPA = 4.0 WEIGHT = 25 LBS (PER MUSCO LIGHTING, INC.)

DATE: 03/10/98 — SHEET C1 OF 1

R.L. FOLEY & ASSOCIATES, INC.
STRUCTURAL ENGINEERS
25652 ASHBY WAY
LAKE FOREST, CALIFORNIA 92630
(714) 549-9595

MUSCO LIGHTING, INC.
2107 STEWART ROAD
MUSCOTINE, IOWA 52761
(319) 263-2281

POLE SUPPORT FOUNDATION
ORANGE TERRACE PARK
RIVERSIDE, CA

Foundation Structural Detail (A)

N.T.S.

CAB 29 DETAIL

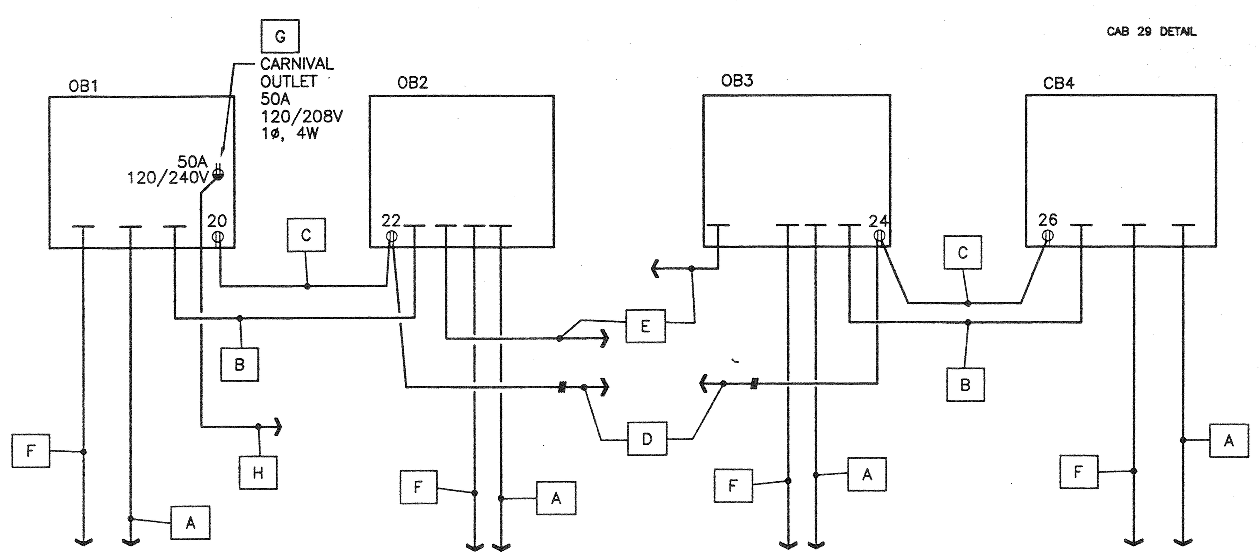

A	1 1/4" C.O. TO SCORE BOARD (FUTURE SCORE BOARD CONTROL WIRE).
B	TWO 1" C.O. (SPARE).
C	120V CIRCUIT, 3/4" C. 2 #12 + 1 #12G.
D	TWO 120V CIRCUITS TO PANEL 'LA' (FOR PLUG OUTLETS). 3/4" C., 3 #12 + 1 #12 G
E	1" C.O. INTO BUILDING. (SPARE) STUB UP IN OFFICE AS SHOWN.
F	1 1/4" C.O. TO PANEL 'LA' (FUTURE SCORE BOARD POWER).
G	50A, 120/208V, 3W + G TWIST LOCK OUTLET.
H	1 1/4" C., 3 #8 + 1 #10 G TO 'LA', 16–18.

'OB' Box Conduit Diagram (E)

BASE BID
N.T.S.

OB4.dwg Detail

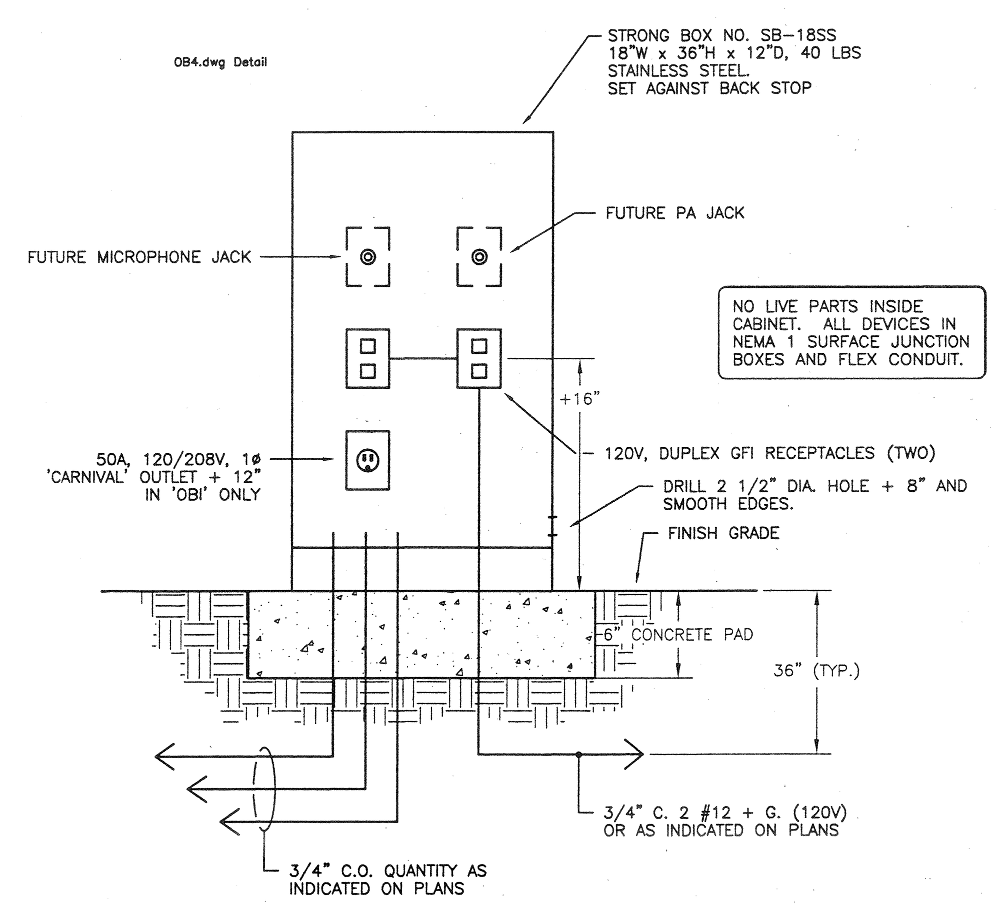

Outlet Box "OB" (D)

BASE BID
N.T.S.

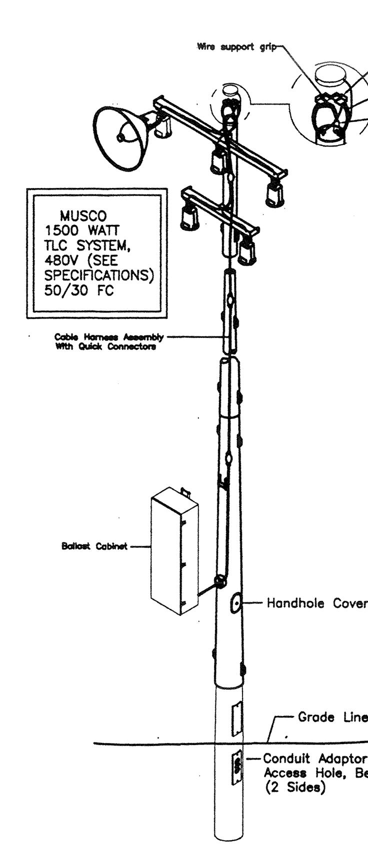

BALLAST CABINET – CIRCUIT BREAKER SCHEDULE

VOLTAGE	SYSTEM PHASE	METAL HALIDE 1500W # OF FIXTURES	METAL HALIDE 1000W # OF FIXTURES	MAX. AMP RATING	LUG SIZE	WIRE SIZE
480	THREE PHASE	1–6	1–9	35	(1) #14–1/0	#3
480		7–12	10–18	60	(1) #14–1/0	#3
480		13–20	19–20	109	(1) #14–1/0	#3
480		21–35	31–52	175	(1) #6–350 MCM	#2/0
277	SINGLE OR THREE	1–3	1–5	35	(1) #14–1/0	#3
277		4–7	6–10	60	(1) #14–1/0	#3
277		8–12	11–18	109	(1) #14–1/0	#3
277		13–20	19–31	175	(1) #6–350 MCM	#2/0
240		1–3	1–4	35	(1) #14–1/0	#3
240		4–8	5–9	60	(1) #14–1/0	#3
240		7–10	10–15	100	(1) #14–1/0	#3
240		11–18	16–29	175	(1) #1–500 MCM OR (2) #1–250 MCM	#3
208		1–2	1–4	35	(1) #14–1/0	#3
208		3–5	5–8	60	(1) #14–1/0	#3
208		6–8	9–13	100	(1) #14–1/0	#3
208		9–15	14–23	175	(1) #1–500 MCM OR (2) #1–250 MCM	#3

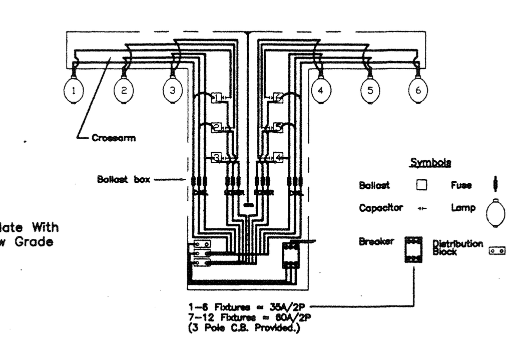

POLE WIRING SYSTEM

WIRING SCHEMATIC
(Ballast Cabinet)

MUSCO DETAIL

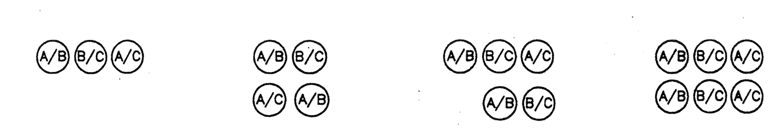

THREE FIXTURES	FOUR FIXTURES	FIVE FIXTURES	SIX FIXTURES
PHASE A = 2 FIX.	PHASE A = 3 FIX.	PHASE A = 3 FIX.	PHASE A = 4 FIX.
PHASE B = 2 FIX.	PHASE B = 3 FIX.	PHASE B = 4 FIX.	PHASE B = 4 FIX.
PHASE C = 2 FIX.	PHASE C = 2 FIX.	PHASE C = 3 FIX.	PHASE C = 4 FIX.

TYPICAL WIRING OF FIXTURES WITH 3ø DISTRIBUTION

Musco Detail (G)

N.T.S.

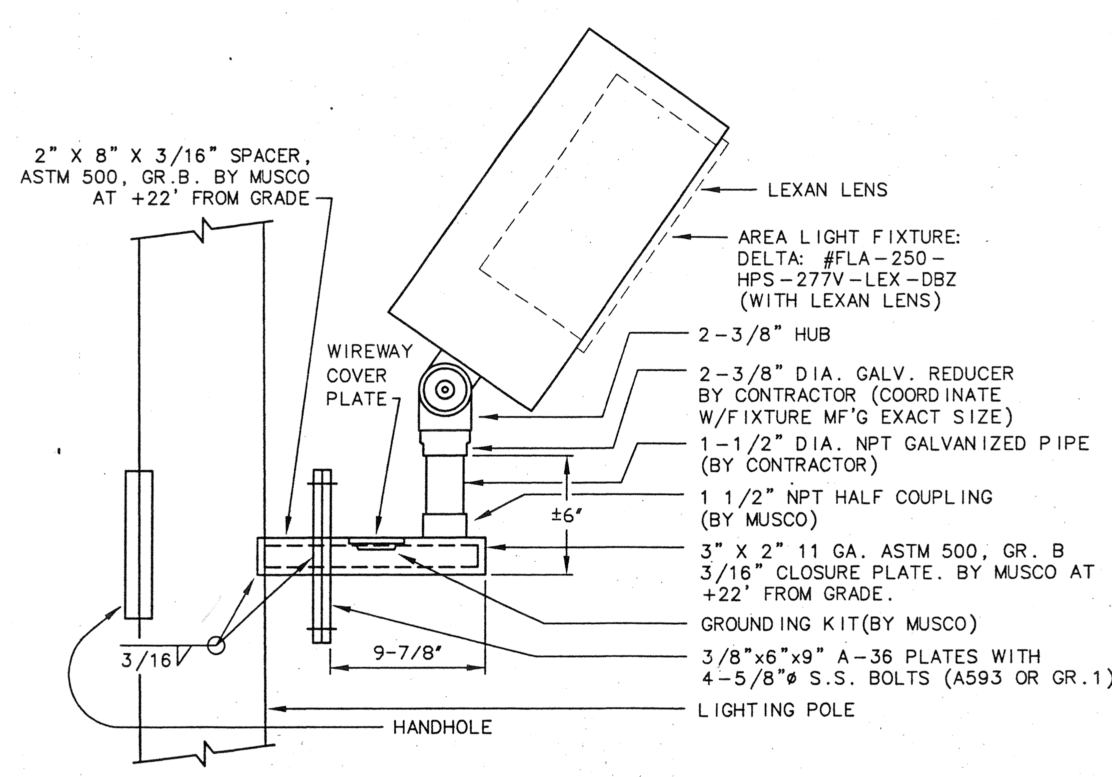

AREA LIGHT DETAIL

DETAIL AL7

PROVIDE BRACKET FOR TWO FIXTURES WHERE TWO FIXTURES REQUIRED IN ONE DIRECTION. FOR POLES A1,A2,A3,A4.

Fixture 'H' (F)

N.T.S.

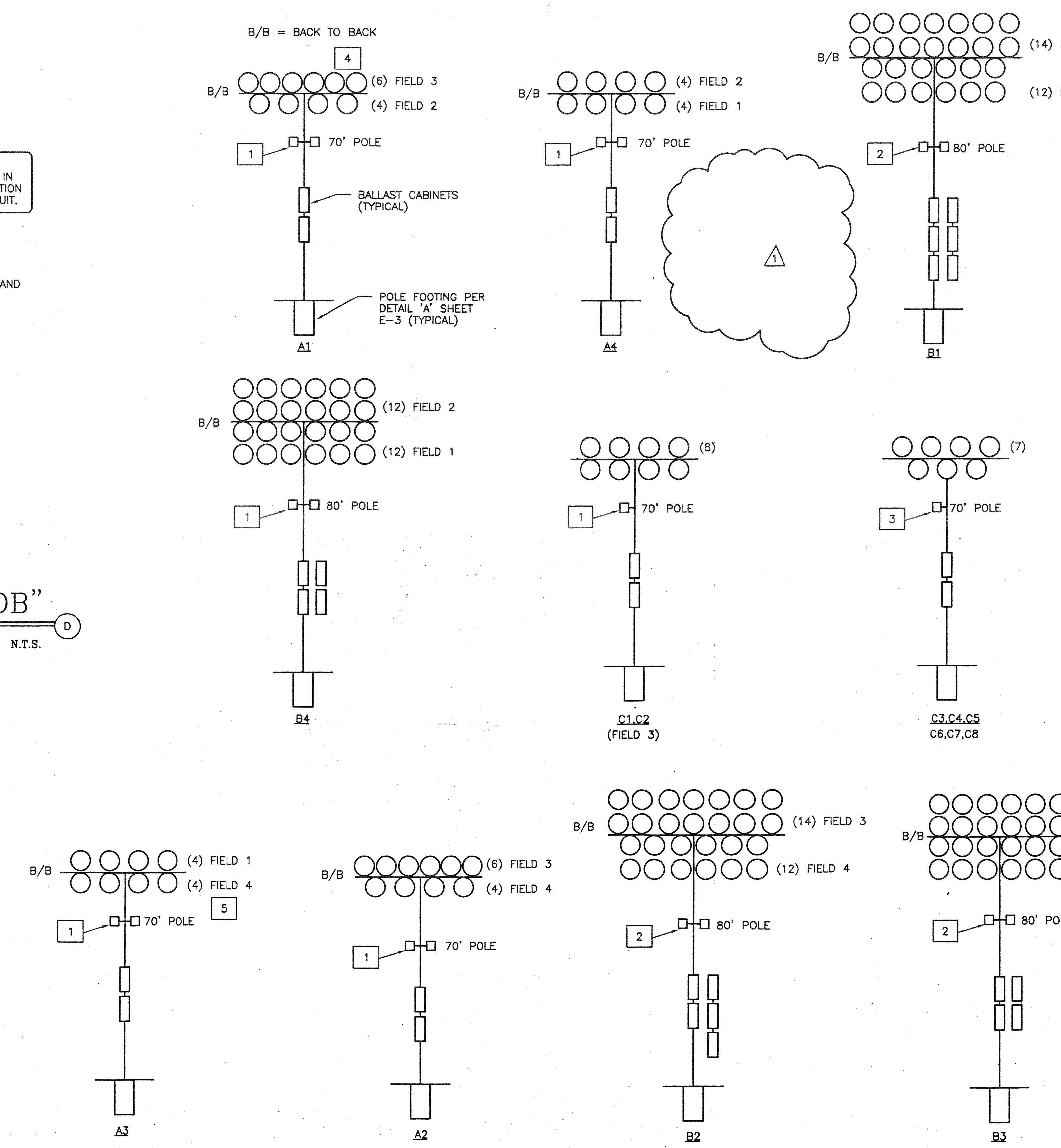

Pole Configurations (C)

N.T.S.

POLE NOTES:

1	= TWO AREA LIGHTS PER DETAIL 'F', SHEET E–3 AT + 22' AT 90 DEGREES TO FIELDS.
2	= TWO AREA LIGHTS PER DETAIL 'F', SHEET E–3 AT + 22'. MOUNT EACH AT 90 DEGREES TO FIELDS.
3	= ONE AREA LIGHT PER DETAIL 'F', SHEET E–3 AT + 22' MOUNT NON–FIELD SIDE.
4	= FIELD 3 LIGHT FIXTURES, MOUNTING HARDWARE AND BALLAST CABINET(S) ARE ADDITIVE BIDS ITEM 'B' 2A AND 2B POLE TO HAVE HUBS AND DEVICES FOR FUTURE ADDITION OF LIGHT FIXTURES AND RELATED EQUIPMENT AND WIRING.
5	= SAME AS NOTED 4 EXCEPT FOR FIELD 4.

8/26/99

98–216–1484

REEDCORP ENGINEERING
CONSULTING ELECTRICAL ENGINEERS
2061 Business Center Drive, Suite 110
Irvine, CA 92612
(949) 752-1278 FAX (949) 752-1287

RHA
LANDSCAPE ARCHITECTS PLANNERS. INC.
3612 MISSION INN AVE
RIVERSIDE, CALIFORNIA 92501
LIC. #1512
PH. (909) 781–1930
FAX (909) 686–8091

CLIENT:
McMILLIN COMPANIES
2727 Hoover Avenue
National City, CA 91950

PROJECT:
ORANGE TERRACE COMMUNITY PARK
RIVERSIDE, CA

© R H A Landscape Architects –Planners, Inc. expressly reserves its common law copyright and other property rights in these plans.

REVISIONS	DATE	BY
1 ADDENDUM #1	9/30/99	DSG

REGISTERED LANDSCAPE ARCHITECT
RANDOLPH HLUBIK NO.1512
Signature
7/31/01
Renewal Date
Date
STATE OF CALIFORNIA

SHEET TITLE
ELECTRICAL POLE CONFIGURATIONS

DESIGNED	RR
DRAWN	MR
CHECKED	RR
DATE	8/26/99
SCALE	AS NOTED
JOB NO.	98138

SHEET
E–3
OF 23 SHEETS

DATE PLOTTED: 9/30/99

DRAWING NUMBER

OCTP-4

PLAN HOLD CORPORATION • IRVINE, CALIFORNIA
REORDER BY NUMBER 075AR
POSITION EDGE OF PRINT ON THIS LINE

DRAWING NUMBER

PLAN HOLD CORPORATION • IRVINE, CALIFORNIA
REORDER BY NUMBER 075AR
POSITION EDGE OF PRINT ON THIS LINE

DRAWING NUMBER

PLAN HOLD CORPORATION • IRVINE, CALIFORNIA
REORDER BY NUMBER 075AR
POSITION EDGE OF PRINT ON THIS LINE

DRAWING NUMBER

PLAN HOLD CORPORATION • IRVINE, CALIFORNIA
REORDER BY NUMBER 075AR
POSITION EDGE OF PRINT ON THIS LINE

DRAWING NUMBER

PLAN HOLD CORPORATION • IRVINE, CALIFORNIA
REORDER BY NUMBER 075AR
POSITION EDGE OF PRINT ON THIS LINE

DRAWING NUMBER

PLAN HOLD CORPORATION • IRVINE, CALIFORNIA
REORDER BY NUMBER 075AR
POSITION EDGE OF PRINT ON THIS LINE

DRAWING NU

PLAN HOLD CORPORATION •
REORDER BY NUMBER
POSITION EDGE OF PRINT ON T

FIXTURE SCHEDULE AND CERTIFICATE OF COMPLIANCE (PART 2 OF 2) — LTG-1

FIXTURE NAME	TOTAL WATTS PER FIXT.	LAMPS TYPE I	F	H	NO OF LAMPS	WATTS PER LAMP	LAMP DESCRIPTION	BALLAST TYPE S	E	O	NO PER LUMINAIRE	FIXTURE DESCRIPTION	VOLT
A												SEE DETAIL ON SHEET E-2	
B												SEE DETAIL ON SHEET E-2	
C												SEE DETAIL ON SHEET E-2	
D												(NOT USED)	
E												SEE DETAIL ON SHEET E-2	
F												SEE DETAIL ON SHEET E-2	
G												SEE DETAIL ON SHEET E-2	
H												SEE DETAIL ON SHEET E-3	
J	62	–	X	–	2	31	F035 T8	–	X	–	1	METALUX W240A120LE3 1' X 4' FLUORESCENT FIXTURE	120
K	62	–	X	–	2	31	F035 T8	–	X	–	1	METALUX RCG248120LE3 1' X 4' FLUORESCENT FIXTURE CHAIN HUNG AT +8'	120
L	50	–	–	–	1	35	HPS –	X	–	–	1	KENALL 5200-HPF-9500 WALL MOUNTED AT +8'	120
M	50	–	–	–	1	35	HPS –	X	–	–	1	HALO M700-6115-1773P DOWNLIGHT	120
N	70	–	–	–	1	50	HPS –	X	–	–	1	SPAULDING NO. MRK-50-HPS WALL MOUNTED AT +9' (BACK BOX FLUSH IN CONCRETE BLOCK WALL)	120 *

I = INCANDESCENT S = STANDARD BALLAST
F = FLUORESCENT E = ELECTRONIC BALLAST
H = HIGH INTENSITY O = OTHER BALLAST

* PAINT TYPE 'N' HOUSING TO MATCH BUILDING.

LIGHTING FIXTURE NOTES:

1. CONTRACTOR TO PROVIDE ALL LAMPS NOT FURNISHED WITH LIGHTING FIXTURES.
2. ALL H.I.D. FIXTURES SHALL HAVE HPF BALLASTS.
3. LIGHTING FIXTURE IN CONTACT WITH INSULATION TO BE U.L. LISTED FOR THERMAL BARRIER OR PROVIDE A 3" MINIMUM CLEARANCE.
4. ALL FLUORESCENT FIXTURES SHALL BE EQUIPPED WITH RAPID START ELECTRONIC BALLASTS MANUFACTURED BY MAGNETEK OR EQUAL.
5. ALL FLUORESCENT BALLASTS SHALL BE CERTIFIED TO BE IN COMPLIANCE WITH C.E.C. TITLE 24 MANDATORY MEASURES AND HAVE CBM CERTIFICATION.
6. QUANTITY OF LIGHTING FIXTURES SHOWN ON PANEL SCHEDULES AND TITLE 24 LIGHTING FORMS ARE FOR CALCULATION / REFERENCE ONLY AND SHALL NOT BE USED FOR TAKE-OFF OR ACTUAL CONSTRUCTION QUANTITY ORDERING.
7. ALL EXTERIOR ADJUSTABLE LIGHTING FIXTURES SHALL BE AIMED AFTER DARK IN THE PRESENCE OF AND AT A TIME CONVENIENT TO THE OWNER/REPRESENTATIVE.
8. LENSES: FOR ALL PLASTIC LENSES SPECIFIED PROVIDE MINIMUM 100% PURE VIRGIN ACRYLIC PLASTIC 0.125" THICK.

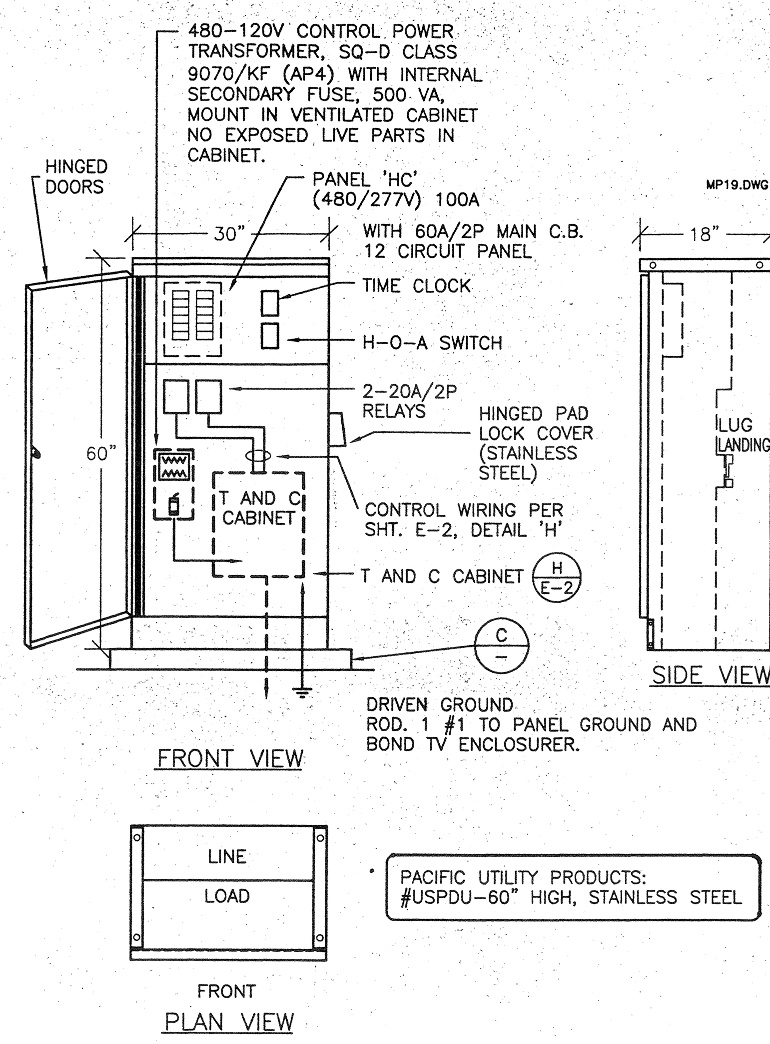

Tennis Court Panel Cabinet 'HC' (B)

N.I.C.

ALL PANELS, CONTROL BOARDS, ETC. IN THIS ROOM ARE IN BASE BID

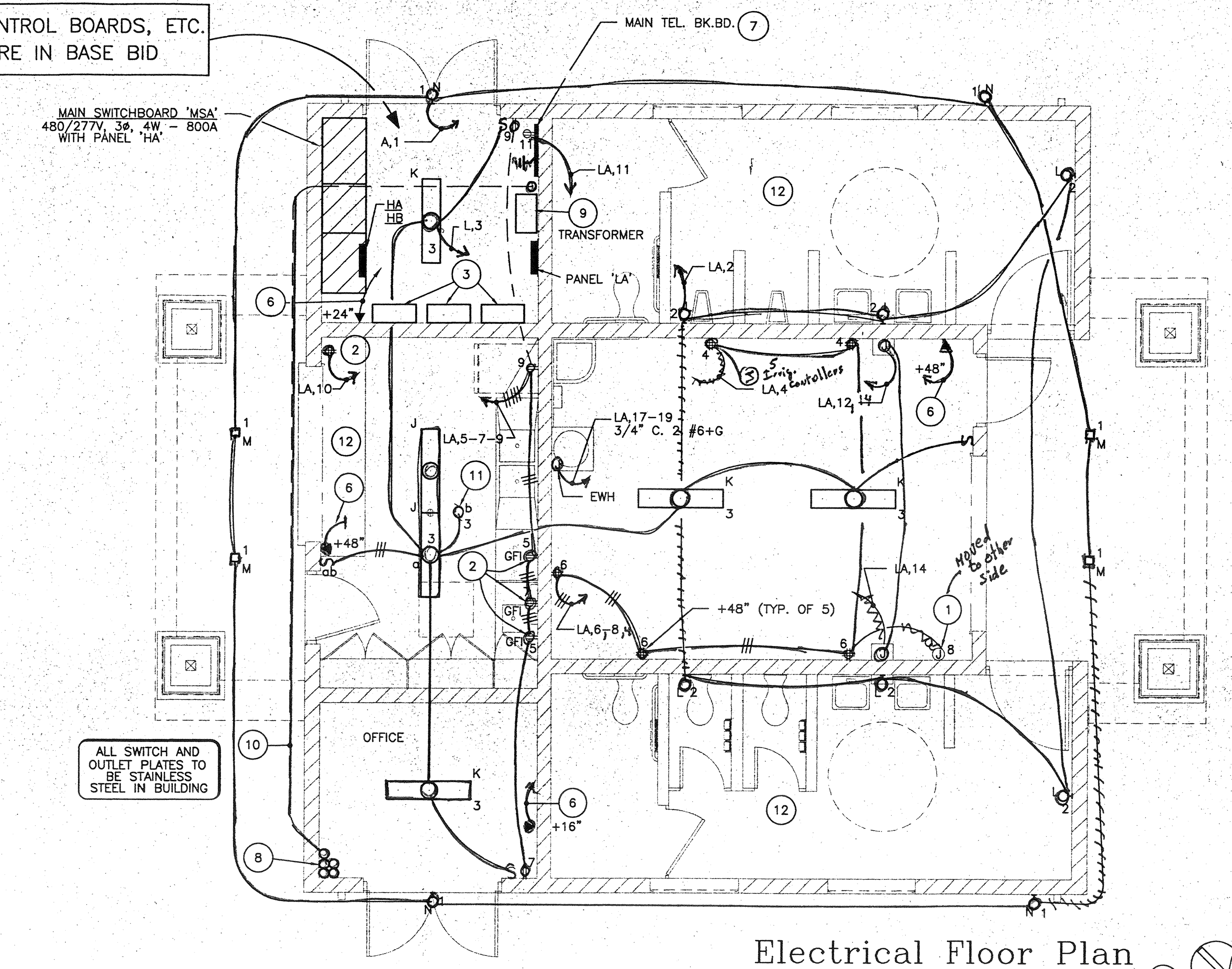

Electrical Floor Plan (A)

ADDITIVE BID ITEM 1 1/4" = 1' – 0"

SB2 DETAIL

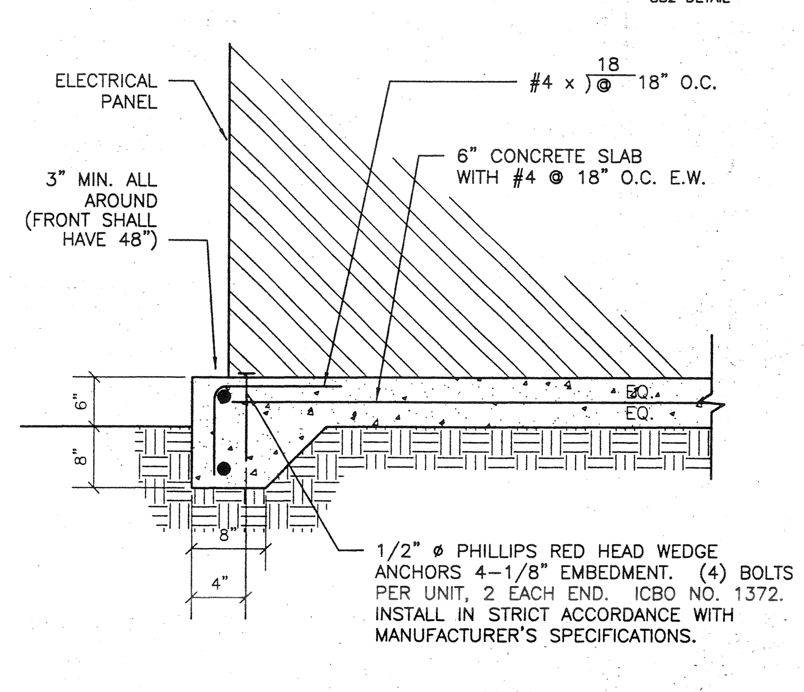

Concrete Pad Detail (C)

(FOR PANEL 'HC') N.T.S.

PLAN NOTES:

1. HOOK-UP TO IRRIGATION CONTROLLER(S), VERIFY EXACT LOCATION.
2. MOUNT ABOVE COUNTER. VERIFY HEIGHT.
3. * MUSCO LIGHT CONTROL CABINETS (THREE). ALLOW APROX. 7 FT TOTAL WIDTH ON WALL. SEE DETAIL 'C', E-5.
4. (NOT USED)
5. (NOT USED)
6. 3/4" C.O. TO 'TB'.
7. TELEPHONE BACKBOARD 'TB' (36" X 36" X 3/4" PLYWOOD) WITH 1 #6 TO GROUND.
8. CONDUIT ONLY STUB UPS FROM 'OB' BOXES PER DETAIL E, E-3. STUB UP + 6" AND CAP.
9. 480 – 120/208V, 3 PHASE TRANSFORMER, FLOOR MOUNTED (BOLT TO FLOOR). 75 KVA DRY TYPE. PROVIDE 1/2" GYPBOARD BEHIND TRANSFORMER ON WALL (30" H X 20" W X 20" D).
10. 1 1/2" C.O. STUB UP (+ 6"/CAP) FROM ELECTRICAL ROOM.
11. HOOK-UP EXHAUST FAN.
12. ALL DEVICE PLATES ON THE INTERIOR OF THE BUILDING TO BE STAINLESS STEEL. ALL OUTLETS IN CONCESSION ROOM, OFFICE AND RESTROOMS TO BE FLUSH IN WALL AND CONCEALED CONDUIT.

* ARRANGE CABINETS PER NOTE 3 TO KEEP N.E.C. CODE CLEARANCES.

⚠1 REPLACE ENTIRE SHEET FOR ADDENDUM #1

Fixture Type:	TLC MZ
Lamp Type:	1500w MZ
Lumens:	155000
File # / Date:	31090r2 / 04-Jan-1999
Project Engineer:	Nick Smith

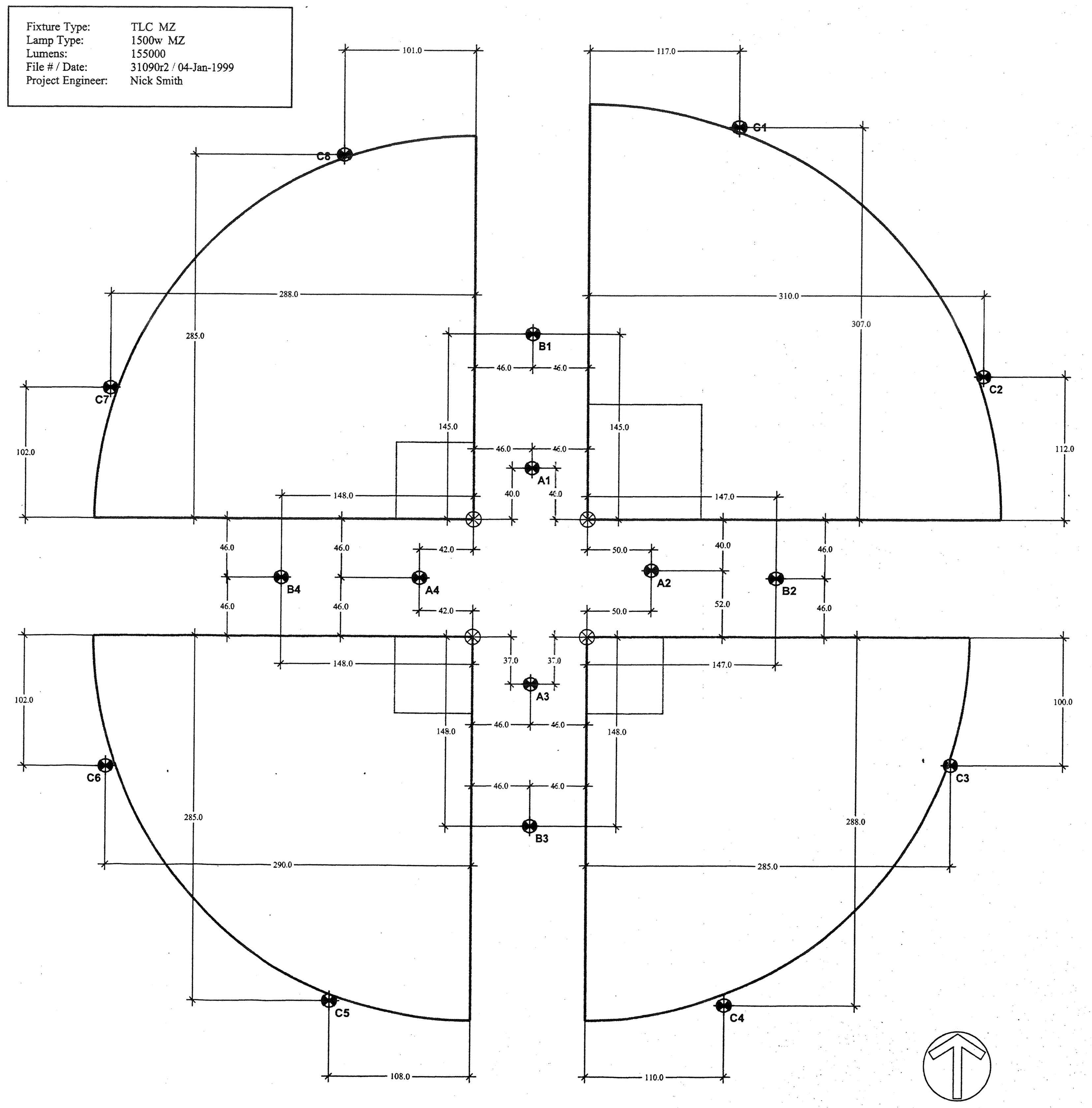

Musco Pole Location Plan (D)

1" = 60'-0"

TENNIS COURTS

PANEL: HC
DATE: 01/18/99 12:54:39
JOB: 1484
PANEL VOLTAGE: 480/277 3Φ 4 W
BUS: 100A
MAINS: 60A/3P
AIC RATING: 14,000
CIRCUIT CODE: blank or N : NON-CONTINUOUS
L : LONG-CONTINUOUS
MOUNTING: MOUNT IN 'MS' R : DEMANDABLE RECEPTACLES
K : KITCHEN NO. OF EQUIPMENT: 0

CKT NO	CODE	TRIP	POLE	DESCRIPTION	(NOTE)	M	R	L	ΦA	ΦB	ΦC	ABC	ΦA	ΦB	ΦC	L	R	M	(NOTE) DESCRIPTION	TRIP	POLE	CODE	CKT NO
1	L	20	/	TENNIS 1	(A)			6	3300				X						SPARE	20	1		2
3	L	/	2	TENNIS 1				6		3300				X					SPARE	20	1		4
5	L	20	/	TENNIS 2	(B)			6			3300				X				SPACE				6
7	L	/	2	TENNIS 2				6	3300				X						SPACE				8
9		20	/	TRANSFORMER						250				X					SPACE				10
11		/	2	TRANSFORMER							250				X				SPACE				12

PANEL NOTES: PHASE TOTALS ΦA: 3300 ΦB: 3550 Φ250 3550

TOTAL CONNECTED VA	3550
CONNECTED VA (CODE N)	250
CONNECTED VA (CODE L)	3300
CONNECTED VA (CODE R)	0
CONNECTED VA (CODE K)	0
PANEL CONNECTED KVA	3.6
PANEL DEMAND KVA	4.4
PANEL DEMAND AMPS	18.2
HIGH Φ AMPS W/LCL	34.4

* (A) CIRCUIT CONTROLLED BY 20A/2P RELAY (120V COIL).
* (B) CIRCUIT CONTROLLED BY 20A/2P RELAY (120V COIL).

* CIRCUITS CONTROLLED THRU MUSCO CONTROL-LINKS

PANEL: LA
12/18/98 13:20:16
JOB: 1484
PANEL VOLTAGE: 208/120 3Φ 4 W
BUS: 225A
MAINS: 200A/3P
AIC RATING: 10,000
CIRCUIT CODE: blank or N : NON-CONTINUOUS
L : LONG-CONTINUOUS
MOUNTING: SURFACE R : DEMANDABLE RECEPTACLES
K : KITCHEN NO. OF EQUIPMENT: 0

CKT NO	CODE	TRIP	POLE	DESCRIPTION	(NOTE)	M	R	L	ΦA	ΦB	ΦC	ABC	ΦA	ΦB	ΦC	L	R	M	(NOTE) DESCRIPTION	TRIP	POLE	CODE	CKT NO
1	L	20	1	EXTERIOR	(A)			8	480				420			4			(A) REST ROOMS	20	1		2 *
3		20	1	KITCHEN		1		4		412				540			4		MAINT.	20	1		4
5		20	1	KITCHEN			2				600				1080	6			MAINT.	20	1		6
7		20	1	KITCHEN			2		600				180					1	IRRIGATION	20	1		8
9		20	1	REFG/ELECTRICAL ROOM			2			1000				500			2		KITCHEN	20	1		10
11		20	1	TELEPHONE		1					180				1500			1	HAND DRYER	20	1		12
13		20	1	SPARE		1			X				1500					1	HAND DRYER	20	1		14
15		20	1	SPARE		1				X				4800					OUTLET (50A)	50	/		16
17		60	/	EWH		1					5500				4800				–	/	2		18
19		/	2	–		1			5500				180						OB1	20	1		20
21		20	1	SHELTER			1			180				180					OB2	20	1		22
23		20	1	~~SPARE~~ Storage							X				180				OB3	20	1		24
25		20	1	SPARE					X				180						OB4	20	1		26
27		20	1	SPARE						X				800					RELAYS	20	1		28
29		20	1	SPARE							X				800				RELAYS	20	1		30
31				SPACE					X				800						RELAYS	20	1		32
33				SPACE						X				800					RELAYS	20	1		34
35				SPACE							X				X				SPACE				36
37				SPACE					X				X						SPACE				38
39				SPACE						X				X					SPACE				40
41				SPACE							X				X				SPACE				42

PANEL NOTES: PHASE TOTALS ΦA: 9840 ΦB: 9212 ΦC: 14640

TOTAL CONNECTED VA	33692
CONNECTED VA (CODE N)	33212
CONNECTED VA (CODE L)	480
CONNECTED VA (CODE R)	0
CONNECTED VA (CODE K)	0
PANEL CONNECTED KVA	33.7
PANEL DEMAND KVA	33.8
PANEL DEMAND AMPS	93.9
HIGH Φ AMPS W/LCL	122.0

* (A) CIRCUIT CONTROLLED BY 20A/2P RELAY.

* CIRCUITS CONTROLLED THRU MUSCO CONTROL-LINKS

8/26/99

98-216-1484
REEDCORP ENGINEERING
CONSULTING ELECTRICAL ENGINEERS
2061 Business Center Drive, Suite 110
Irvine, CA 92612
(949) 752-1278 FAX (949) 752-1287

RHA LANDSCAPE ARCHITECTS PLANNERS, INC.
3612 MISSION INN AVE
RIVERSIDE, CALIFORNIA
92501
LIC. #1512
PH. (909) 781-1930
FAX (909) 686-8091

CLIENT: McMILLIN COMPANIES
2727 Hoover Avenue
National City, CA 91950

PROJECT: ORANGE TERRACE COMMUNITY PARK
RIVERSIDE, CA

Electrical As Built [signature] E-18-00

M. Wilson Co. Contractors, Inc.
2005 Sierra Way
La Verne CA. 91750

© R H A Landscape Architects –Planners, Inc. expressly reserves its common law copyright and other property rights in these plans. These plans are not to be reproduced, changed or copied in any form or manner whatsoever nor are they to be assigned to any third party without first obtaining the express written permission.

REVISIONS	DATE	BY
⚠1 ADDENDUM #1	9/30/99	DSG

REGISTERED LANDSCAPE ARCHITECT — RANDOLPH HLUBIK NO.1512 — Signature — 7/31/01 Renewal Date — Date — STATE OF CALIFORNIA

SHEET TITLE
ELECTRICAL PLAN

DESIGNED	RR
DRAWN	MR
CHECKED	RR
DATE	8/26/99
SCALE	AS NOTED
JOB NO.	98138

SHEET
E-4
OF 23 SHEETS

DATE PLOTTED: 9/30/99

DRAWING NUMBER
ORANGE TERRACE CP-3A
PLAN HOLD CORPORATION • IRVINE, CALIFORNIA
REORDER BY NUMBER 075AR

WIRING DIAGRAMS DETAIL

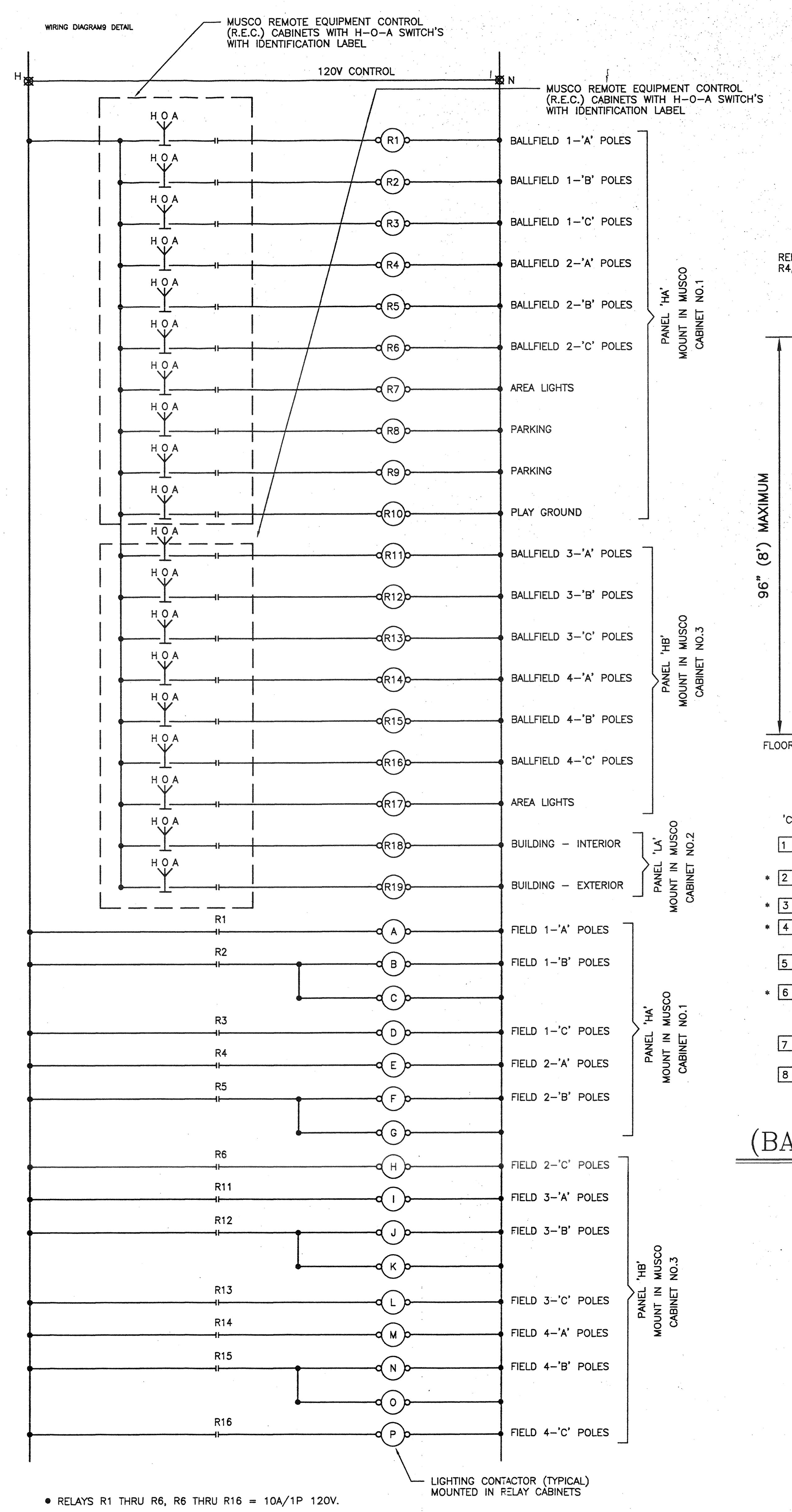

- RELAYS R1 THRU R6, R6 THRU R16 = 10A/1P 120V.
- RELAYS R7,R8,R9,R10,R17,R18,R19 = 277V, 20A/1P WITH 120V COIL.
- RELAY R7 = 277V, 30A/1P WITH 120V COIL.
- CONTACTOR (A) THRU (P) ELECTRICALLY HELD, 120V COIL, 30A OR 60A PER PANEL SCHEDULES 'HA' AND 'HB'.

Ballfield Lighting Control System (D)

ENTIRE CONTROL SYSTEM IS BASE BID N.T.S.

MUSCO LIGHTING CONTROL SYSTEM

A. PROVIDE MUSCO CONTROL-LINK REMOTE EQUIPMENT CONTROL (R.E.C.) PANELS TO CONTROL 19 STATIONS, INCLUDING H-O-A SWITCHES PER PLANS.

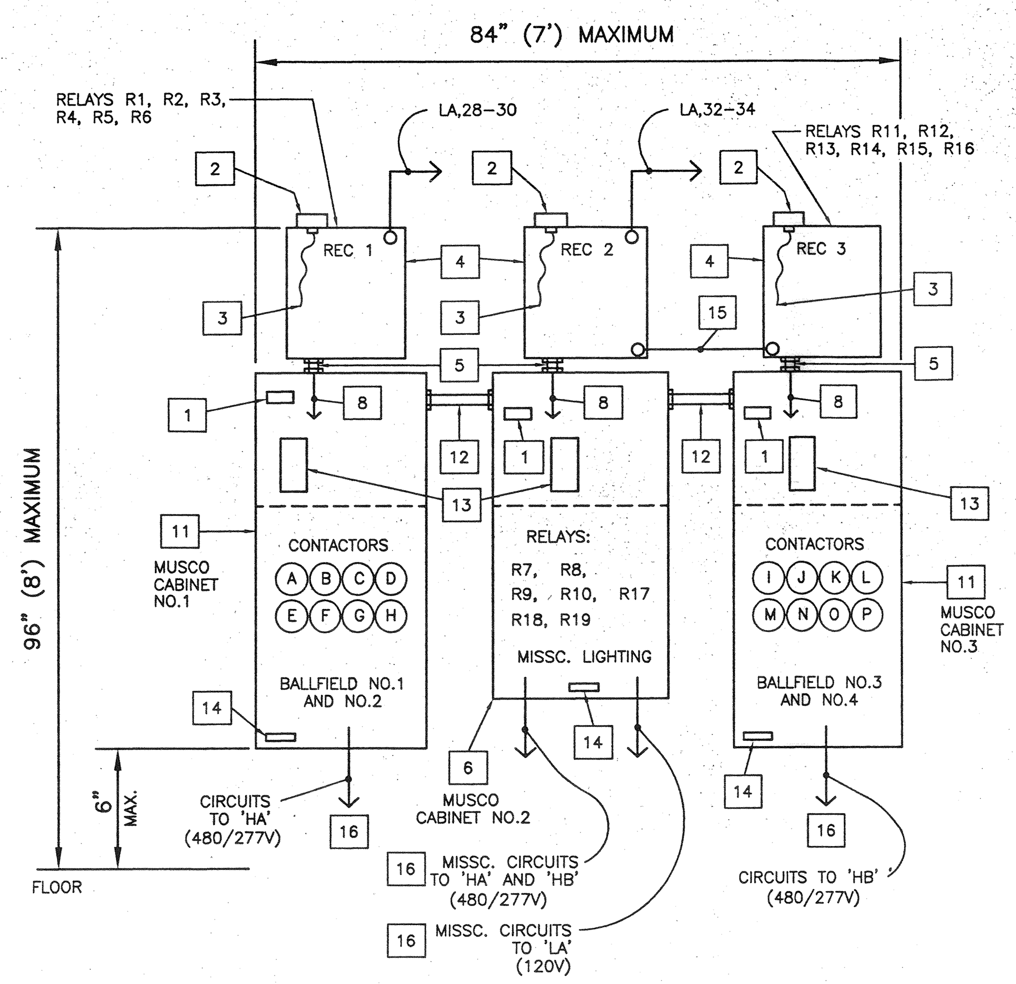

'CONTROL LINKS' PANELS - MOUNTED ON WALL

- [1] PROVIDE ENGRAVED PLATE. "120V CONTROL CIRCUIT FROM PANEL 'LA'".
- * [2] MUSCO ANTENNA. SEAL OPENING AT TOP OF PANEL.
- * [3] ANTENNA WIRE LEAD.
- * [4] 16" W X 18" H X 9" D, NEMA 4. MUSCO 'REC' CABINET WITH CONTROL RELAYS.
- [5] 2" C.O. CLOSE NIPPLE (BY E.C.) (MAXIMUM 2" BETWEEN CABINETS)
- * [6] 24" W X 48" H X 10" D, NEMA 4. ALL BALLFIELD LIGHTING CONTACTORS AND CONTROL RELAYS PROVIDE BY MUSCO AND SHIPPED INSTALLED.
- [7] PROVIDE METAL BACK PAN FOR ENTIRE 30" WIDE SECTION.
- [8] 120V CONTROL WIRE TO RELAY COILS (BY E.C.).
- [9] 120V, 20A CIRCUITS FROM PANEL 'LA' (SPARE)
- [10] (NOT USED)
- * [11] 24" W X 72" H X 10" D NEMA 4. ALL BALLFIELD LIGHTING CONTACTORS AND CONTROL RELAYS PROVIDE BY MUSCO AND SHIPPED INSTALLED.
- [12] 2" C.O. BETWEEN CABINETS. (INCLUDE 1 #6 BONDING GROUND TO EACH CABINET) MAXIMUM 6" BETWEEN PANELS.
- [13] O-O-A (H-O-A) SWITCHES PROVIDED BY MUSCO ON CABINET. QUANITY AS REQUIRED BY CONTROL DIAGRAM.
- [14] BOND SECTION TO MUSCO CABINETS.
- [15] 1/2" C. 2 #12 CONTROL CIRCUIT.
- [16] TO CIRCUIT BREAKERS THRU CONTACTORS.

* FURNISHED BY MUSCO/INSTALLED BY E.C.

(BASE BID) Contactor/Relay Cabinet (C)

N.T.S.

MAIN SWITCHBOARD NOTES:

A. SERIES RATED SYSTEM:

1. THE ENTIRE MAIN SWITCHBOARD AND ELECTRICAL PANEL SYSTEM SHALL BE UL LISTED FOR A SERIES RATED SYSTEM BASED ON A.I.C. POWER CO. CONTRIBUTION SHOWN ON ONE LINE DIAGRAM. THE SWITCHBOARD SHALL BE BRACED FOR 65,000A RMS SYMM.
2. THE SHORT CIRCUIT CURRENT RATING OF EACH PANEL AND OVER CURRENT SHALL BE EQUAL TO THE LOWEST INTERRUPTING RATING OF ANY DEVICE INSTALLED BUT NOT MORE THAN THE MAIN RATING AT THE SYSTEM VOLTAGE. ADDITIONAL OR REPLACEMENT DEVICES SHALL BE OF SAME MANUFACTURER, TYPE DESIGNATION AND AN EQUAL OR GREATER INTERRUPTING CAPACITY.
3. PROVIDE RED ENGRAVED PLATE WITH WHITE LETTERS: "SWITCHBOARD IS FULLY RATED. REPLACEMENT DEVICES SHALL BE OF SAME MANUFACTURER, TYPE DESIGNATION AND AN EQUAL OR GREATER INTERRUPTING CAPACITY."
4. ALL CIRCUIT BREAKERS IN MAIN SWITCHBOARD AND DISTRIBUTION (INCLUDING GROUND FAULT DEVICES) THAT HAVE ADJUSTABLE SOLID STATE TYPE ADJUSTMENTS SHALL REQUIRE A COORDINATION STUDY AND A TRIP SETTING STUDY BY A TESTING CO. (POWER ENGINEERING SERVICES, 714/524-9100) OR EQUAL AND THE RELATED FEE INCLUDED IN BID.
5. THE CONTRACTOR SHALL PROVIDE ALL NECESSARY INFORMATION TO TESTING CO. (CATALOG NUMBERS, DEVICE TYPES, ONE LINE DIAGRAM, LENGTHS OF FEEDERS, ETC.)

B. COPPER BUSSING SHALL BE 1000A/SQ. INCH FOR 100% RATING.

C. ALL SECTIONS OF SWITCHBOARD (HORIZONTAL AND VERTICAL) TO BE FULLY BUSSED FOR FUTURE ADDITIONS.

D. SWITCHBOARD IS LOCATED AGAINST A WALL. THE TOP OF THE SERVICE/SWITCHBOARD LINE-UP SHALL BE BOLTED TO THE WALL WITH-IN THREE FEET OF EACH END WITH 1/4" THICK ANGLE IRON OR P100 UNI-STRUT AND FITTINGS OR WITH EQUAL TOP SUPPORT.

E. CONTRACTOR SHALL SEND SWITCHBOARD SHOP DRAWING TO POWER CO. REPRESENTATIVE FOR APPROVAL BY POWER CO. AND CONFIRMATION THAT SWITCH GEAR COMPLIES WITH POWER CO. REGULATIONS.

F. ALL DIMENSIONS OF SWITCH GEAR ARE BASED ON RSE-SIERRA (714/529-3471). CONTRACTOR IS RESPONSIBLE FOR ANY SUBSTITUTION OF EQUIPMENT WITH GREATER DIMENSIONS THAN MANUFACTURED BY RSE-SIERRA AND FOR ALLOWED SPACE AND CODE CLEARANCES.

G. THE LANDING LUGS IN THE UNDERGROUND PULL SECTION, SIZES PER MAIN SWITCH, ON SERVICE SECTION CONNECTED LOAD. DISCONNECT LINKS FROM LANDING LUGS THE UNDERGROUND PULL SECTION TO EACH SERVICE SECTION BUS PER UTILITY COMPANY SERVICE GUIDE (U.C.S.G.).

DETAIL 02

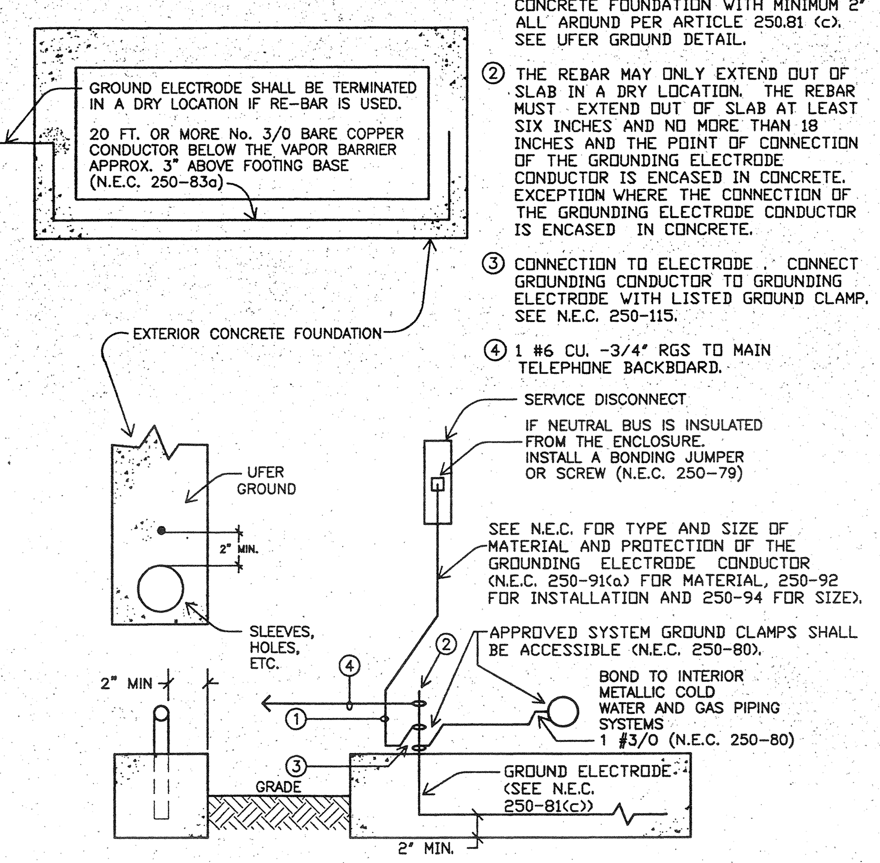

NOTE: GROUNDING ELECTRODE CONDUCTOR MUST TERMINATE AT NEAREST STRUCTURAL STRUCTURAL STEEL OR WATER PIPE (NEC 250-26 (C)

NOTES:

1. 1 #3/0 CU. 1" RGS EMBEDDED IN CONCRETE FOUNDATION WITH MINIMUM 2' ALL AROUND PER ARTICLE 250.81 (c). SEE UFER GROUND DETAIL.
2. THE REBAR MAY ONLY EXTEND OUT OF SLAB IN A DRY LOCATION. THE REBAR MUST EXTEND OUT OF SLAB AT LEAST SIX INCHES AND NO MORE THAN 18 INCHES AND THE POINT OF CONNECTION OF THE GROUNDING ELECTRODE CONDUCTOR IS ENCASED IN CONCRETE. EXCEPTION WHERE THE CONNECTION OF THE GROUNDING ELECTRODE CONDUCTOR IS ENCASED IN CONCRETE.
3. CONNECTION TO ELECTRODE . CONNECT GROUNDING CONDUCTOR TO GROUNDING ELECTRODE WITH LISTED GROUND CLAMP. SEE N.E.C. 250-115.
4. 1 #6 CU. -3/4" RGS TO MAIN TELEPHONE BACKBOARD.

NOTE: 20 FT. (6.1 M) OR MORE OF 1/2" DIAMETER REINFORCING STEEL, OR #4 BARE COPPER WIRE (OR LARGER). SEE 250-81 (c). WHERE SPLICES ARE NECESSARY TO OBTAIN THE REQUIRED 20 FEET OF REBAR, THEY MUST BE MADE SO THAT THE TWO BARS OVERLAP BY NO LESS THAN 15 INCHES AND ARE SECURED BY AT LEAST TWO STEEL TIE WIRES. REINFORCING RODS THAT ARE COATED WITH A NONCONDUCTIVE MATERIAL ARE NOT ACCEPTABLE AS AN ELECTRODE.

THE TOTAL RESISTANCE MEASURED BETWEEN THE MAIN SERVICE GROUND BUS AND THE EARTH SHALL NOT EXCEED 25 OHMS UNDER DRY GROUND CONDITIONS. SEE ELECTRICAL SPECIFICATIONS FOR "GROUND TESTS".

UFER GROUND
IN ACCORDANCE WITH THE 1993 (OR LATEST ADOPTED EDITION) NATIONAL ELECTRIC CODE

Ufer Ground Detail (B)

N.T.S.

MOUNTED IN 'MS'

PANEL: HA
DATE: 02/11/99 15:57:08
JOB: 1484
PANEL VOLTAGE: 480/277 3Φ 4 W
BUS: 400A
MAINS: MLO
AIC RATING: 14,000
CIRCUIT CODE: blank or N : NON-CONTINUOUS
L : LONG-CONTINUOUS
R : DEMANDABLE RECEPTACLES
K : KITCHEN NO. OF EQUIPMENT: 0

CKT NO	CODE	TRIP	POLE	DESCRIPTION	(NOTE)	M	R	L	ΦA	ΦB	ΦC	ABC	ΦA	ΦB	ΦC	L	R	M	(NOTE)	DESCRIPTION	TRIP	POLE	CODE	CKT NO
1	L	30	/	POLE A3/A4-FIELD 1 (8)	(A)			5	4125				4950			6			(E)	POLE A1/A4-FIELD 2 (8)	30		L	2
3	L			–				6		4950				4125		5				–			L	4
5	L	/	3	–				5			4125				4125	5				–	/	3	L	6
7	L	30	/	POLE B3-FIELD 1 (12)	(B)			8	6600				6600			8			(F)	POLE B1 FIELD 2 (12)	30		L	8
9	L			–				8		6600				6600		8				–			L	10
11	L	/	3	–				8			6600				6600	8				–	/	3	L	12
13	L	30	/	POLE B4-FIELD 1 (12)	(C)			8	6600				6600			8			(G)	POLE B4-FIELD 2 (12)	30		L	14
15	L			–				8		6600				6600		8				–			L	16
17	L	/	3	–				8			6600				6600	8				–	/	3	L	18
19	L	50	/	POLE C5/C6-FIELD 1 (14)	(D)			9	7425				7425			9			(H)	POLE C7,C8-FIELD 2 (14)	40		L	20
21	L			–				10		8250				7425		9				–			L	22
23	L	/	3	–				9			7425				8250	10				–	/	3	L	24
25				SPACE					X				X							SPACE				26
27	L	30	1	AREA LIGHTS	(R)			16		4960				X						SPACE				28
29		20	1	SPARE							X				X					SPACE				30
31		20	1	SPARE					X				X							SPACE				32
33	L	20	1	PARKING/WALK	(S)			8		2400				X						SPACE				34
35	L	20	1	PARKING/WALK	(T)			8			2400				X					SPACE				36
37	L	20	1	PLAY AREA	(U)			4	1840				X							SPACE				38
39				SPACE						X				X						SPACE				40
41				SPACE							X				X					SPACE				42

PANEL NOTES: PHASE TOTALS ΦA: 52165 ΦB: 58510 ΦC: 52725

TOTAL CONNECTED VA	163100
CONNECTED VA (CODE N)	0
CONNECTED VA (CODE L)	163100
CONNECTED VA (CODE R)	0
CONNECTED VA (CODE K)	0
PANEL CONNECTED KVA	163.1
PANEL DEMAND KVA	203.8
PANEL DEMAND AMPS	245.3
HIGH Φ AMPS W/LCL	264.3

- (A) CONTROLLED BY CONTACTOR A-FIELD 1. (30A/3P) CONTACTOR (TYPICAL)
- (B) CONTROLLED BY CONTACTOR B-FIELD 1. (30A/3P) CONTACTOR (TYPICAL)
- (C) CONTROLLED BY CONTACTOR C-FIELD 1. (30A/3P) CONTACTOR (TYPICAL)
- (D) CONTROLLED BY CONTACTOR D-FIELD 1. (60A/3P) CONTACTOR (TYPICAL)
- (E) CONTROLLED BY CONTACTOR E-FIELD 2. (30A/3P) CONTACTOR (TYPICAL)
- (F) CONTROLLED BY CONTACTOR F-FIELD 2. (30A/3P) CONTACTOR (TYPICAL)
- (G) CONTROLLED BY CONTACTOR G-FIELD 2. (30A/3P) CONTACTOR (TYPICAL)
- (H) CONTROLLED BY CONTACTOR H-FIELD 2. (60A/3P) CONTACTOR (TYPICAL)
- (R) CONTROLLED BY 30A/1P RELAY 'R7'.
- (S) CONTROLLED BY 20A/1P RELAY 'R8'.
- (T) CONTROLLED BY 20A/1P RELAY 'R9'.
- (U) CONTROLLED BY 20A/1P RELAY 'R10'.

PANEL HA AND HB NOTES:
1. ALL RELAYS/CONTACTORS WITH 120V COILS.
2. ALL CONTACTOR/RELAYS SHOWN FOR HA, HB AND R18, R19 AT LA FURNISHED BY MUSCO IN MUSCO CONTACTOR CABINETS PER DETAIL 'C' THIS SHEET.

MOUNTED IN 'MS'

PANEL: HB
DATE: 12/01/98 09:55:58
JOB: 1484
PANEL VOLTAGE: 480/277 3Φ 4 W
BUS: 400A
MAINS: MLO
AIC RATING: 14,000
CIRCUIT CODE: blank or N : NON-CONTINUOUS
L : LONG-CONTINUOUS
R : DEMANDABLE RECEPTACLES
K : KITCHEN NO. OF EQUIPMENT: 0

CKT NO	CODE	TRIP	POLE	DESCRIPTION	(NOTE)	M	R	L	ΦA	ΦB	ΦC	ABC	ΦA	ΦB	ΦC	L	R	M	(NOTE)	DESCRIPTION	TRIP	POLE	CODE	CKT NO
1	L	30	/	POLE A1/A2-FIELD 3 (12)	(I)			8	6600				4125			6			(M)	POLE A2/A3 FIELD (8)	30		L	2
3	L			–				8		6600				4950		5				–			L	4
5	L	/	3	–				8			6600				4125	5				–	/	3	L	6
7	L	50	/	POLE B1-FIELD 3 (14)	(J)			9	7425				6600			8			(N)	POLE B2-FIELD 4 (12)	30		L	8
9	L			–				10		8250				6600		8				–			L	10
11	L	/	3	–				9			7425				6600	8				–	/	3	L	12
13	L	50	/	POLE B2 FIELD 3 (14)	(K)			10	8250				6600			8			(O)	POLE B3-FIELD 4 (12)	30		L	14
15	L			–				9		7425				6600		8				–			L	16
17	L	/	3	–				9			7425				6600	8				–	/	3	L	18
19	L	50	/	POLE C1/C2-FIELD 3 (16)	(L)			11	9075				7425			9			(P)	POLE C3/C4-FIELD 4(14)	50		L	20
21	L			–				10		8250				7425		9				–			L	22
23		/	3	–				10			8250				8250	10				–	/	3	L	24
25		20	1	AREA LIGHTS	(S)			8	2480				X							SPACE				26
27		20	1	SPARE						X				X						SPACE				28
29		20	1	SPARE							X				X					SPACE				30
31				SPACE					X				X							SPACE				32
33				SPACE						X				X						SPACE				34
35				SPACE							X				X					SPACE				36
37				SPACE					X				X							SPACE				38
39				SPACE						X				X						SPACE				40
41				SPACE							X				X					SPACE				42

PANEL NOTES: PHASE TOTALS ΦA: 58580 ΦB: 56100 ΦC: 55275

TOTAL CONNECTED VA	169955
CONNECTED VA (CODE N)	10730
CONNECTED VA (CODE L)	159225
CONNECTED VA (CODE R)	0
CONNECTED VA (CODE K)	0
PANEL CONNECTED KVA	170.0
PANEL DEMAND KVA	209.8
PANEL DEMAND AMPS	204.0
HIGH Φ AMPS W/LCL	264.0

- (I) CONTROLLED BY CONTACTOR I-FIELD 3 (30A/3P) CONTACTOR (TYPICAL)
- (J) CONTROLLED BY CONTACTOR J-FIELD 3 (60A/3P) CONTACTOR (TYPICAL)
- (K) CONTROLLED BY CONTACTOR K-FIELD 3 (60A/3P) CONTACTOR (TYPICAL)
- (L) CONTROLLED BY CONTACTOR L-FIELD 3 (60A/3P) CONTACTOR (TYPICAL)
- (M) CONTROLLED BY CONTACTOR M-FIELD 4 (30A/3P) CONTACTOR (TYPICAL)
- (N) CONTROLLED BY CONTACTOR N-FIELD 4 (30A/3P) CONTACTOR (TYPICAL)
- (O) CONTROLLED BY CONTACTOR O-FIELD 4 (30A/3P) CONTACTOR (TYPICAL)
- (P) CONTROLLED BY CONTACTOR P-FIELD 4 (60A/3P) CONTACTOR (TYPICAL)
- (S) CONTROLLED BY 20A/1P RELAY 'R17'.

PANEL HA, HB ALL CIRCUIT BREAKERS AND ALL CONTROLS IN BASE BID.

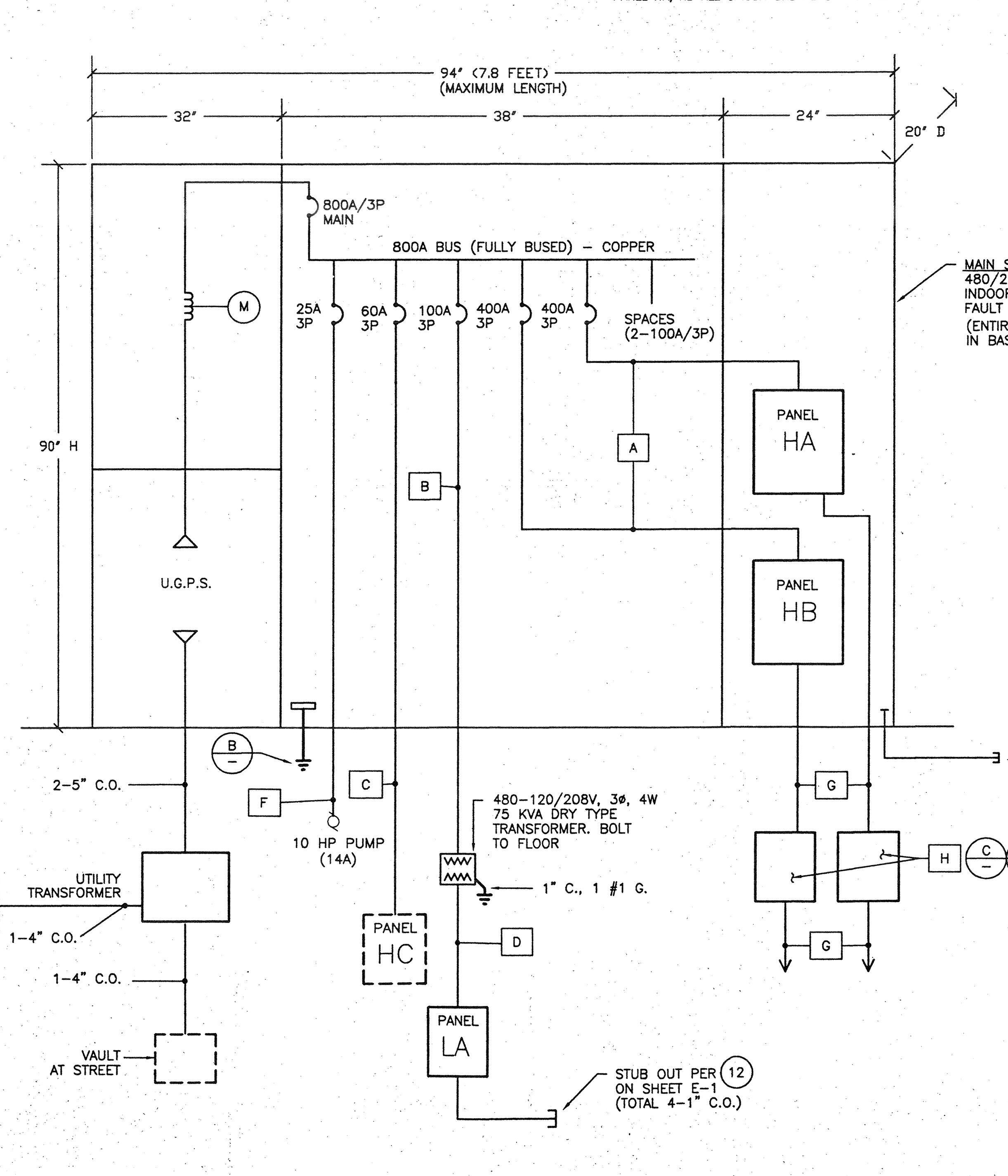

LOAD SUMMARY

PANEL HA	=	245A
PANEL HB	=	264A
PANEL HC	=	25A
TRANSFORMER (LA)	=	38A
PUMP	=	14A
TOTAL		586A (WITH LCL)

ONE LINE NOTES

- [A] 4 #500MCM.
- [B] 1 1/2" C., 3 #1 + 1 #6G.
- [C] 2" C.O. IN BASE BID PER E-1.
- [D] 2" C., 4 #3/0 + 1 #6G.
- [E] 1 #1 TO UFER GROUND BOND.
- [F] 1 1/4" C., 3 #6 + 1 #6 G.
- [G] BALLFIELD LIGHTING CIRCUITS PER SHEET E-1 CIRCUIT SCHEDULE.
- [H] CONTACTOR CABINETS (TWO).

ALL WIRE = COPPER THHN/THWN RATED

1 REPLACE ENTIRE SHEET FOR ADDENDUM #1

One Line Diagram (A)

N.T.S.

8/26/99

98-216-1484
REEDCORP ENGINEERING
CONSULTING ELECTRICAL ENGINEERS
2061 Business Center Drive, Suite 110
Irvine, CA 92612
(949) 752-1278 FAX: (949) 752-1287

RHA
LANDSCAPE ARCHITECTS PLANNERS, INC.
3612 MISSION INN AVE
RIVERSIDE, CALIFORNIA
92501
LIC. #1512
PH. (909) 781-1930
FAX (909) 686-8091

CLIENT:
McMILLIN COMPANIES
2727 Hoover Avenue
National City, CA 91950

PROJECT:
ORANGE TERRACE COMMUNITY PARK
RIVERSIDE, CA

© R H A Landscape Architects -Planners, Inc. expressly reserves its common law copyright and other property rights in these plans. These plans are not to be reproduced, changed or copied in any form or manner whatsoever nor are they to be ...

REVISIONS	DATE	BY
1 ADDENDUM #1	9/30/99	DSG

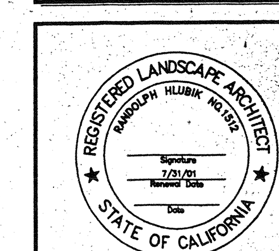

SHEET TITLE
ELECTRICAL PANEL SCHEDULE

DESIGNED	RR
DRAWN	MR
CHECKED	RR
DATE	8/26/99
SCALE	AS NOTED
JOB NO.	98138

SHEET
E-5
OF 23 SHEETS

DATE PLOTTED: 9/30/99