RIVERSIDE CITY OF RIVERSIDE CALIFORNIA

PUBLIC WORKS DEPARTMENT

PHOENIX AVENUE TRUNK SEWER (PHASE II)

CONSTRUCTION LEGEND

CENTER LINE ——℄——
RIGHT-OF-WAY ——R/W——
SUBDIVISION LOT LINE ——PL——
TOP OF SLOPE
TOE OF SLOPE
DIRECTION OF FLOW

SPECIFIC CONSTRUCTION NOTES

⬢ NUMBERS ABOVE 100 IN A HEXAGON ON THE PLAN REFER TO THE RESPECTIVE STANDARD DRAWING AND SHALL BE CONSTRUCTED ACCORDINGLY. UNLESS MODIFICATIONS ARE NOTED ON THE PLAN OR COVER SHEET. ANY NUMBER SHOWN BELOW THE STANDARD DRAWING NUMBER INDICATES THE SPECIFIC ALTERNATE TO BE CONSTRUCTED.

⬡ T — REMOVE PALM TREE TO ALLOW FOR SEWER LINE INSTALLATION AND REPLACE TO ORIGINAL LOCATION AS DIRECTED BY PARKS INSPECTOR.

⬡ R/I — REMOVE EXISTING TREE. CLASS I-6" TO 18",CLASS II 18" TO 36" CLASS III-OVER 36"

⬡ A/1 — INDICATES DETAIL / INDICATES SHEEET NO.

⬡ P — PLANT MAGNOLIA GRANDIFLORA (MAJESTIC BEAUTY) STREET TREE(15 GAL. MIN.) AS DIRECTED BY TREE INSPECTOR AND AS DECRIBED IN PARK & RECREATION SECTION OF THE ACCOMPANYING SPECIAL PROVISIONS(10 PLACES)
JIM DAVIS 351-6126

GENERAL CONSTRUCTION NOTES

1. EXISTING UTILITIES SHOWN ON THIS PLAN ARE PLOTTED FROM UTILITY RECORDS. THE CONTRACTOR IS REQUIRED TO TAKE DUE PRECAUTIONARY MEASURES TO LOCATE AND PROTECT ALL UTILITIES WHETHER OR NOT SHOWN ON THIS PLAN. IF THE COVER OF A UTILITY IS KNOWN, IT IS SHOWN IN THE PROFILE. UTILITIES IN THE PROFILE AS ----X----X---- INDICATES THAT THE COVER IS UNKNOWN, BUT THE UTILITY IS NOT EXPECTED TO CONFLICT WITH THE PROPOSED IMPROVEMENTS.
2. ALL ELEVATIONS SHOWN ON THE PLANS SHALL BE STAKED IN THE FIELD.
3. PRIME CONTRACTORS BIDDING THIS WORK SHALL HAVE A CLASS A, C-34 OR C-42 LICENSE.
4. EXISTING 27"SEWER AT STA. 40+58.09 SHALL BE EXPOSED AND STATION AND ELEVATION VERIFIED BY CITY SURVEYORS PRIOR TO THE ISSUANCE OF GRADE SHEETS.
5. MOUNTAIN VIEW IS AN ENERGIZED ELECTRICAL SUBSTATION. AT ANY TIME THE FENCE IS OPEN TO ALLOW ACCESS FOR CONSTRUCTION, A QUALIFIED ELECTRICAL WORKER FROM THE PUBLIC UTILITIES DEPARTMENT SHALL BE PRESENT. THE SITE SHALL BE SECURED AT THE END OF EACH WORK DAY. TO SCHEDULE A STANDBY ELECTRICIAN, PLEASE CONTACT BOB THOMAS AT 782-5944 AT LEAST 72 HOURS IN ADVANCE. THE ESTIMATED COST FOR SUBSTATION ELECTRICIAN STANDBY IS $53.46 PER HOUR INCLUDING OVERHEADS. THIS COST SHALL BE PAID BY THE SEWER CONSTRUCTION CONTRACTOR.
6. MINIMUM PAVEMENT REPLACEMENT SECTIONS SHALL BE:
MT. VIEW AVE= 10.5" FULL DEPTH A.C.
DEWEY ST.= 11.5" FULL DEPTH A.C.
WILLARD,DEAN,WALTER,NORMAN= 8" FULL DEPTH A.C.
THIS REPLACEMENT SECTION INCLUDES THE ADDITIONAL 1" A.C. REQUIRED BY CITY STD DWG. #453.

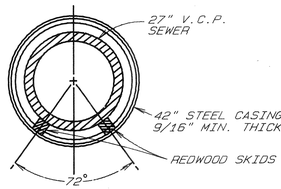

END VIEW
SCALE: 1"=2'

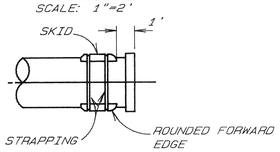

SKID PLACEMENT
SCALE: 1"=4'

SKID SPECIFICATIONS

ALL SKIDS SHALL BE OF REDWOOD, 24" TO 30" IN LENGTH, 4" IN WIDTH, AND OF SUFFICIENT HEIGHT TO PROVIDE A MINIMUM 1" CLEARANCE AT COUPLINGS. ALL SKIDS SHALL BE OF EQUAL DIMENSIONS AND POSITIONED UNIFORMLY WITH ONE SET OF SKIDS PER PIPE SECTION.

STEEL CASING PIPE AND SKIDS DETAIL

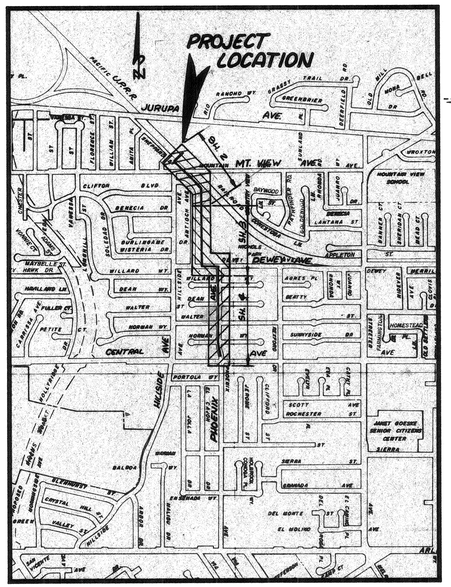

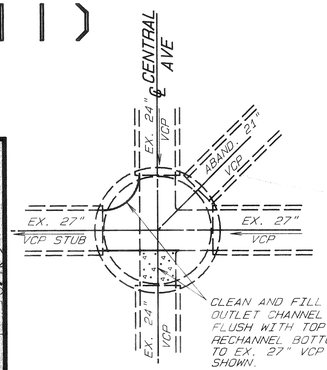

DETAIL A/4
M.H. MOD. @ STA. 40+97.19
SCALE: 1"=4'

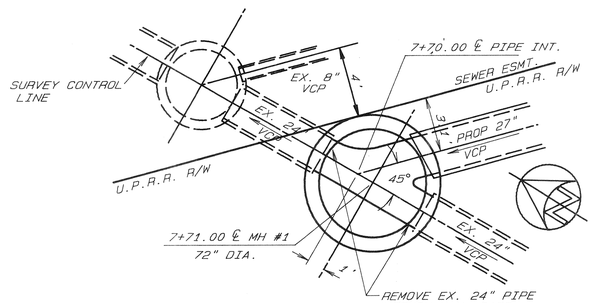

DETAIL B/2
M.H. CONNECTION DETAIL @ STA 7+71.00
SCALE: 1"=4'

EXISTING UNDERGROUND & TOPOGRAPHY LEGEND

EXISTING UNDERGROUND UTILITIES:

SANITARY SEWER —— 8"S ——
WATER LINE —— 6"W ——
STORM DRAIN —— 24"SD ——
GAS LINE —— 3"G ——
ABANDONDED UTILITY —— 6"G(ABAN'D.) ——
TELEPHONE CONDUIT —— T —— T ——
ELECTRICAL CONDUIT —— E —— E ——
ELECTROLIER LIGHTING CONDUIT —— ELC ——
TRAFFIC SIGNAL —— SIG —— SIG ——
FIRE ALARM —— F —— F ——

EXISTING TOPOGRAPHY:

BLOCK WALL
BOARD FENCE
WIRE FENCE
CHAIN LINK FENCE
TOP OF SLOPE
TOE OF SLOPE
DIRECTION OF FLOW

- SANITARY SEWER M.H.
- SANITARY SEWER CLEANOUT
- STORM DRAIN M.H.
- IRRIGATION WEIR
- WATER M.H.
- GAS M.H.
- ELECTRIC M.H.
- TELEPHONE M.H.
- WATER METER
- FIRE HYDRANT
- SPRINKLER HEAD
- VALVE
- AIR VALVE
- AIR VENT
- BUS STOP SIGN
- BLOW-OFF VALVE
- IRRIGATION STAND PIPE
- CONCRETE
- ASPHALT
- BUILDING
- EDGE OF PAVEMENT
- BUILDING
- BUILDING
- POLE & GUY ANCHOR
- POWER POLE
- TELEPHONE POLE
- TELEPHONE RISER
- JOINT USE POLE
- PULL BOX
- TRAFFIC SIGN
- PARKING METER
- FIRE ALARM BOX
- STREET NAME SIGN
- GAS METER
- MAIL BOX
- FAUCET
- WALK-DON'T WALK PEDESTRIAN SIGNAL
- ELECTRICAL TEST STATION
- WHEEL STOP
- A.C. BERM
- PEDESTRIAN PUSH BUTTON
- RAILROAD TRACKS
- RAILROAD SIGN
- RAILROAD SIGNAL
- TRAFFIC SIGNAL
- TRAFFIC SIGNAL ON MAST ARM
- TRAFFIC SIGNAL CONTROLLER
- TRAFFIC SIGNAL PRESSURE DETECTOR
- TRAFFIC SIGNAL LOOP DETECTOR
- STREET LIGHT & TRAFFIC SIGNAL ON MAST ARM
- STREET LIGHT (UPRIGHT)
- STREET LIGHT ON MAST ARM
- STEEL POST
- WOOD POST

PROJECT LOCATION PLAN

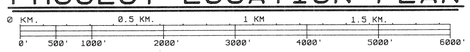

SCALE: 1"=1,000'

IMPORTANT NOTICE
Section 4216/4217 of the Government Code requires a Dig Alert Identification Number to be issued before a "Permit to Excavate" will be valid. For your Dig Alert I.D. Number call Underground Service Alert TOLL FREE 1-800-422-4133 Two working days before you dig.

ENGINEER IN RESPONSIBLE CHARGE
Ronald C. Mueller
RONALD C. MUELLER
R.C.E. 29510 expires 3-31-91
DATE 12-7-90

REGISTERED PROFESSIONAL ENGINEER RONALD C. MUELLER NO. 29510 Expires: 3/31/91 CIVIL STATE OF CALIFORNIA

CITY OF RIVERSIDE
PUBLIC WORKS DEPARTMENT

APPROVED BY	DATE	BY
DEPUTY P.W. ENGINEER	12/10/90	R.Y.G.
PRINCIPAL ENGINEER	12/10/90	[illegible]
SURVEYOR	12/10/90	JHH
CHIEF P.W. INSPECTOR	12/6/90	R.C.
TRAFFIC DIVISION	12-7-90	[illegible]
PARK & RECREATION	12-7-90	J.C.

APPROVED BY [signature]
PUBLIC WORKS DIRECTOR
DATE 12/11/90

PHOENIX AVENUE TRUNK SEWER (PHASE II)
MOUNTAIN TO CENTRAL

ACCOUNT NO. 32-577-511
S-1579
SHEET 1 OF 4

DESIGNED BY AVZ DRAWN BY AVZ CS CHECKED BY

PC 3491-S

JAN 04 1991

MARK	REVISIONS	APPR.	DATE

DESIGNED BY RVZ DRAWN BY RVZ CS CHECKED BY RCM

CITY OF RIVERSIDE
PUBLIC WORKS DEPARTMENT

APPROVED BY	DATE	BY
DEPUTY P.W. DIRECTOR	12/10/90	RMG
PRINCIPAL ENGINEER	12/10/90	
CHIEF P.W. INSPECTOR	12/10/90	BSK
SURVEYOR	12/10/90	
TRAFFIC DIVISION	12-7-90	
PARKS DEPARTMENT	12-7-90	

APPROVED BY
PUBLIC WORKS DIRECTOR
DATE

PHOENIX AVENUE TRUNK SEWER (PHASE II)
MOUNTAIN TO CENTRAL

HORIZ. SCALE: 1"= 40' VERT. SCALE: 1"= 4'

ACCOUNT NO. 32-577-511

S-1579

SHEET 3 OF 4

REGISTERED PROFESSIONAL ENGINEER RONALD C. MUELLER No. 29510 Expires 3/31/91 CIVIL STATE OF CALIFORNIA

PC 3191-S

TELEDYNE POST 123120

JAN 04 1991

EX. GROUNDLINE @ ℄ PROP. SEWER

780
770
760

7+60 ℄ EX. M.H.
7+71.00 ℄ M.H. # 1 72" DIA.
7+81.31 ℄ M.H. #2 72" DIA.
9+47.82 ℄ M.H. #3 72" DIA.
11+30.35 ℄ M.H. #4 60" DIA.
15+10.14 ℄ M.H. #5 72" DIA.

78.9 RIM
80.2 RIM
78.1 RIM

GRAD. WIRE FENCE
12" W
3"-6"

7+85 8E6 STEEL ENCASEMENT
7+84.31 54.45 INV
7+64.44 (END)
9+25 END STEEL ENCASEMENT
9+44.82 54.58 INV
9+50.82 54.59 INV
10+03.06 E.C. PIPE 54.63 INV.
11+27.85 54.73 INV
11+32.85 54.74 INV
15+07.14 55.03 INV
15+13.14 55.04 INV
18+00 55.28 INV

CONST. 140 L.F. 42" STEEL PIPE ENCASEMENT

Q= 8.7 C.F.S.

S= 0.0008
(S=0.0176)

CONST. 5 LF 27" VCP
CONST. 161 LF 27" VCP
CONST. 177 LF 27" VCP
CONST. 374 LF 27" VCP
CONST. 287 LF 27" VCP

MATCH LINE SEE SHEET 3

8 9 10 11 12 13 14 15 16 17 18

7+73 BEGIN PIPE CONST.
7+78.31

NOTE: LIMITS OF JACKING PIT MUST BE A MIN. OF 30' FROM ℄ OF NEAREST RAIL SET. TO FACILITATE JACKING OPERATION INTERFERING SECTIONS OF EX. 8" SEWER PARALLELING THE N'LY U.P.R.R. R/W CAN BE REMOVED & REPLACED WHILE SEWAGE FLOW IN 8" SEWER IS DIVERTED TO 24" SEWER.

BENCH MARK

U.S.C. & G.S. BRASS DISC STAMPED H1144 1961, 60' NORTH-NORTHWEST OF THE INTERSECTION OF JURUPA AVE & U.P.R.R. ELEV. 777.827

BASIS OF BEARING

℄ OF PHOENIX AVE BEING N 0°02' 26"W AS SHOWN ON FILE IN BOOK 25 OF MAPS, PAGE 70 THERE OF, RECORDS OF RIVERSIDE COUNTY, CALIFORNIA.

72" DIA. 500
7+71.00 ℄ M.H. # 1 72" DIA. / 8E6. CONST.
7+81.31 ℄ M.H. #2 72" DIA.
9+47.82 ℄ M.H. #3 72" DIA.
11+30.35 ℄ M.H. #4 60" DIA.
15+10.14 ℄ M.H. #5 72" DIA.
9+34.68 @ 25.00 BC PIPE (S.C.L.)
7+78.00 @ 8'LT. (S.C.L.)
7+80.00 ℄ EX. M.H. (S.C.L.)
15+02.03 @ 89' LT. (S.C.L.)

SEE DETAIL B/1

INSTALL 177 L.F. 27" V.C.P.

INSTALL 5 L.F. 27" V.C.P.

INSTALL 374 L.F. 27" V.C.P.

INSTALL 287 L.F. 27" V.C.P.

INSTALL 140 L.F. 27"V.C.P. (EXTRA STRENGTH) WITHIN 42" DIA. STEEL ENCASEMENT PIPE- SEE "ENCASEMENT & SKID DETAILS" ON SH. 1.

20' S.D. EASEMENT
20' ELEC EASEMENT
20' SEWER EASEMENT
20' SEWER EASEMENT

NOTE: EX. P.P.'S & GUYS TO BE PROTECTED IN PLACE UNLESS OTHERWISE DIRECTED BY THE P.U.E. INSPECTOR

5' CLEAR BETWEEN EX. POLE AND TEMP. FENCE

UNION PACIFIC R.R.
U.P.R.R. R/W
S 71°11'19" E
S 50°28'51" E
MOUNTAIN VIEW AVE.
SURVEY CONTROL LINE
S 44°56'41" E
S 0°05'01" E
NICHOLS PARK
20' R.C.F.C.D. SD EASEMENT
15' P.U.E
10'
25' 18' 18' 33' R/W
12"W
8"S
24"S
21"D
30"D
72"SDR
RPM 1200
RPM 1800
GRADE
TOP
6" CREPE MYRTLE
ABAND. P POLE
60-2318U
80-1800U
5620
5627
5684
6120
6130
6140
6150
6160
6170
6180
6190
6210

MATCH LINE SEE SH. 3

STA. 18+00

SET TEMP. 8' C.L. FENCE W/ 18" 3-STRAND BARBED WIRE CLIMBING BARRIER

MOUNTAIN VIEW ELECTRICAL SUB-STATION

XFMR PAD = SUB-STATION TRANSFORMER

CURVE DATA

1
R= 200'
Δ= 15°49'30"
T= 27.80'
L= 55.24'

REGISTERED PROFESSIONAL ENGINEER
RONALD C. MUELLER
No. 29510
Expires: 3/31/91
CIVIL
STATE OF CALIFORNIA

Ronald C. Mueller

CITY OF RIVERSIDE
PUBLIC WORKS DEPARTMENT

APPROVED BY	DATE	BY
DEPUTY P.W. DIRECTOR	12/28/90	
PRINCIPAL ENGINEER	12/26/90	
CHIEF P.W. INSPECTOR	12/27/90	
SURVEYOR	12/26/90	
TRAFFIC DIVISION	1-7-91	
PARKS DEPARTMENT	1-7-91	

MARK	REVISIONS	APPR.	DATE

DESIGNED BY RVZ DRAWN BY RVZ CS CHECKED BY RVZ

APPROVED BY
PUBLIC WORKS DIRECTOR
DATE 2-1-91

PHOENIX AVENUE TRUNK SEWER (PHASE II) MOUNTAIN TO CENTRAL

HORIZ. SCALE: 1"= 40' VERT. SCALE: 1"= 4'

ACCOUNT NO. 32-577-511

S-1579

SHEET 2 OF 4

Pc 3/19/15

TELEDYNE POST 123120

JAN 04 1991

BENCH MARK

U.S.C. & G.S. BRASS DISC STAMPED H1144 1961, 60' NORTH-NORTHWEST OF THE INTERSECTION OF JURUPA AVE & U.P.R.R. ELEV.: 777.827

BASIS OF BEARING

℄ OF PHOENIX AVE BEING N 0°02'26"W AS SHOWN ON FILE IN BOOK 25 OF MAPS, PAGE 70 THERE OF, RECORDS OF RIVERSIDE COUNTY, CALIFORNIA.

780
770
760

℄ WILLARD WAY
℄ DEAN WAY
℄ WALTER ST
℄ NORMAN WAY

EX. GROUNDLINE @ ℄ PROP. SEWER

MATCH LINE SEE SHEET 3

564
500

32+49.34 ℄ M.H. #10 60" DIA.
36+93.34 ℄ M.H. #11 60" DIA.

48" RCP
(60.39 INV)

Q= 8.7 CFS

S=0.0008
S=0.0008
S=0.0008

29+50
56.37 INV

32+45.84
56.61 INV
32+50.84
56.61 INV

36+90.84
56.96 INV
36+95.84
56.97 INV

38+95.77 PIPE BC
57.13 INV

39+73.22 E.C. PIPE
57.19 INV.

40+28.82 PIPE BC
57.24 INV

40+55.35 END PIPE CONST. JOIN EXIST
18" 0
(63.0 INV)

EX. 27" VCP
(57.26 INV)

CONST 296 LF OF 27" VCP
CONST. 440 LF OF 27" VCP
CONST. 360 LF OF 27"VCP

780
770
760

MATCH LINE SEE SH. 3

STA. 29+50

R/W 30' ℄ 30' R/W
18' 18'

WILLARD WAY
DEAN WAY
WALTER ST.
NORMAN WAY
CENTRAL AVENUE
PHOENIX AVENUE

SURVEY CONTROL LINE
SURVEY CONTROL LINE

S 0°02'26" E
72°50
10.5'
13.5'
33' (TYP.)
19' 19'
24'

5595 5596 5595 5596 5595 5596 5595 5598 5589 5590
5611 5610 5611 5610 5611 5610 5611 5610

6" MAG
8" S
8" ELM
24" ASH
24" ELM
6" BUSH
36" PALM
20" PALM
20" PALM
6' CL FENCE
5' CL FENCE
3' BLOCK WALL
CONC D/W
WK
2' BRICK WALK
6' WOOD FENCE
3' TALL FENCE
FH
12" PINE
SIGN

PROTECT FH IN PLACE
PROTECT FH IN PLACE
PROTECT FH IN PLACE

32+48.34 ℄ MH #10 60" DIA.
36+93.34 ℄ MH #11 60" DIA.

30+73.22 E.C. PIPE S 73°45'47" W (R)
38+95.77 B.C. PIPE
40+28.82 B.C. PIPE
40+55.35 E.C. PIPE END PIPE CONST. JOIN EX. 27" VCP
40+97.19 ℄ EX. M.H.

SEE DETAIL A 1

INSTALL 296 L.F. 27" V.C.P.
INSTALL 440 L.F. 27" V.C.P.
INSTALL 360 L.F. 27" V.C.P.

CURVE DATA

1 R= 274'
Δ= 16°11'47"
T= 38.99'
L= 77.45'

2 R= 200.58'
Δ= 7°34'42"
T= 13.28'
L= 26.53'

Ronald C. Mueller
No. 29510
Expires: 3/31/97
CIVIL
STATE OF CALIFORNIA

DESIGNED BY RVZ DRAWN BY CS CHECKED BY

MARK	REVISIONS	APPR.	DATE

CITY OF RIVERSIDE
PUBLIC WORKS DEPARTMENT

APPROVED BY	DATE	BY
DEPUTY P.W. DIRECTOR	2/19/96	[illegible]
PRINCIPAL ENGINEER	2/20/96	SC
CHIEF P.W. INSPECTOR	2/21/96	CSC
SURVEYOR	2/21/96	SBH
TRAFFIC DIVISION	12-7-96	[illegible]
PARKS DEPARTMENT	12-7-96	[illegible]

APPROVED BY
PUBLIC WORKS DIRECTOR
DATE 2-21-96

PHOENIX AVENUE TRUNK SEWER (PHASE II)
MOUNTAIN TO CENTRAL

HORIZ. SCALE: 1"= 40' VERT. SCALE: 1"= 4'

ACCOUNT NO. 32-577-511

S-1579

SHEET —

3/91-5

*TELEDYNE POST 123120

JAN 04 1996