REMOVED PRIOR TO 1980

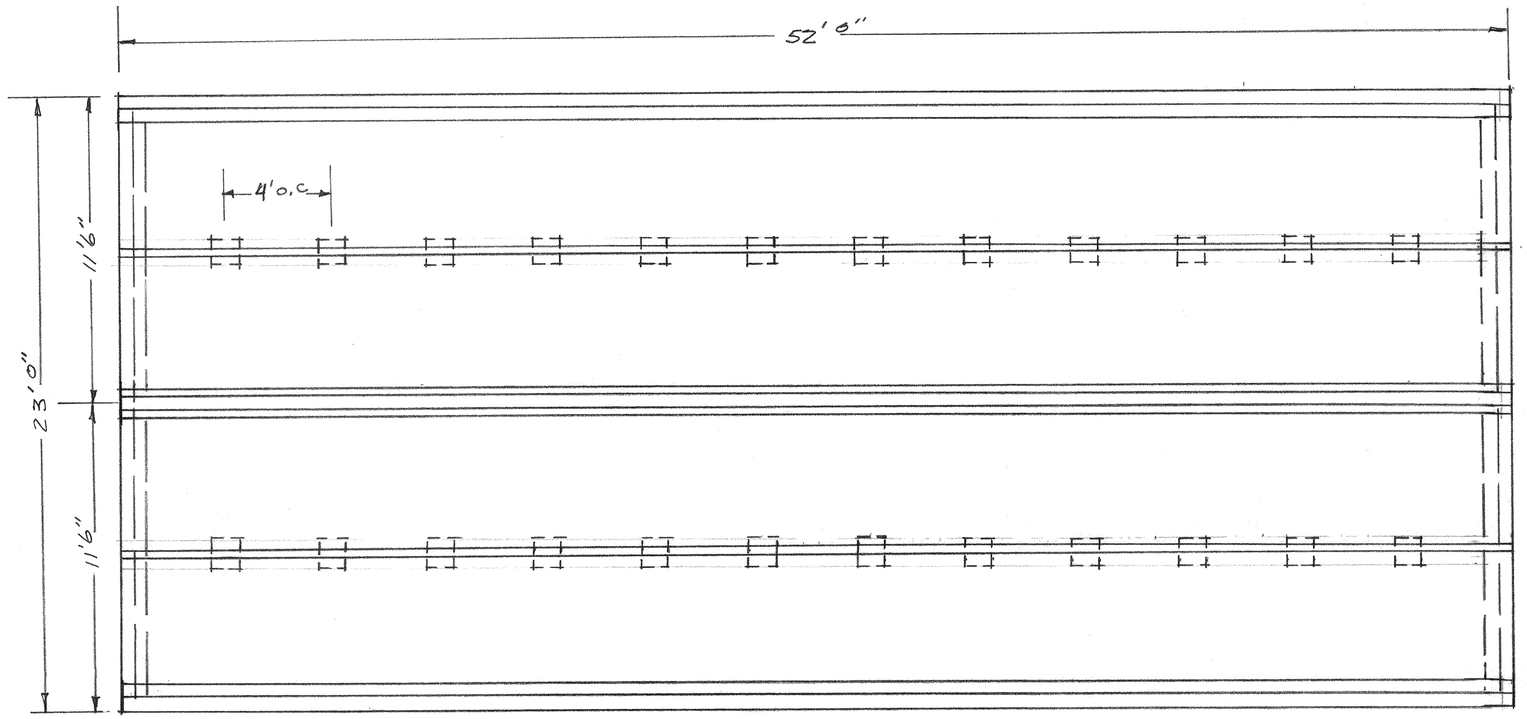

FOUNDATION PLAN
SCALE 1/4" = 1'

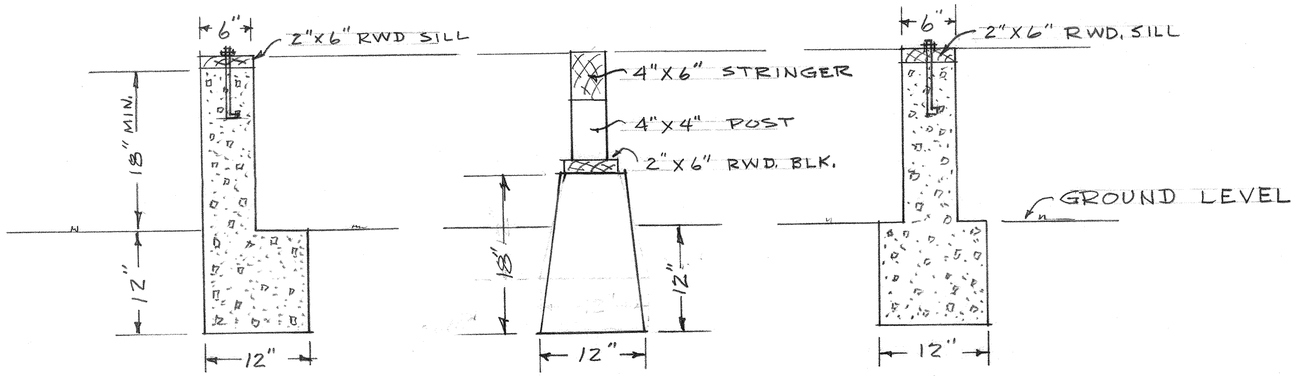

EXTERIOR FOUNDATION WALL SECTION

POST & STRINGER DETAIL

INTERIOR FOUNDATION WALL SECTION

DETAILS SCALE 1" = 1'

FOUNDATION PLANS
FOR BUILDING AT
NICHOLS PARK
PARK & RECREATION DEPT.
CITY OF RIVERSIDE

MAR. 27, 1970

P-134-12

DRAWING NUMBER
N1-08A

REMOVED PRIOR TO 1980

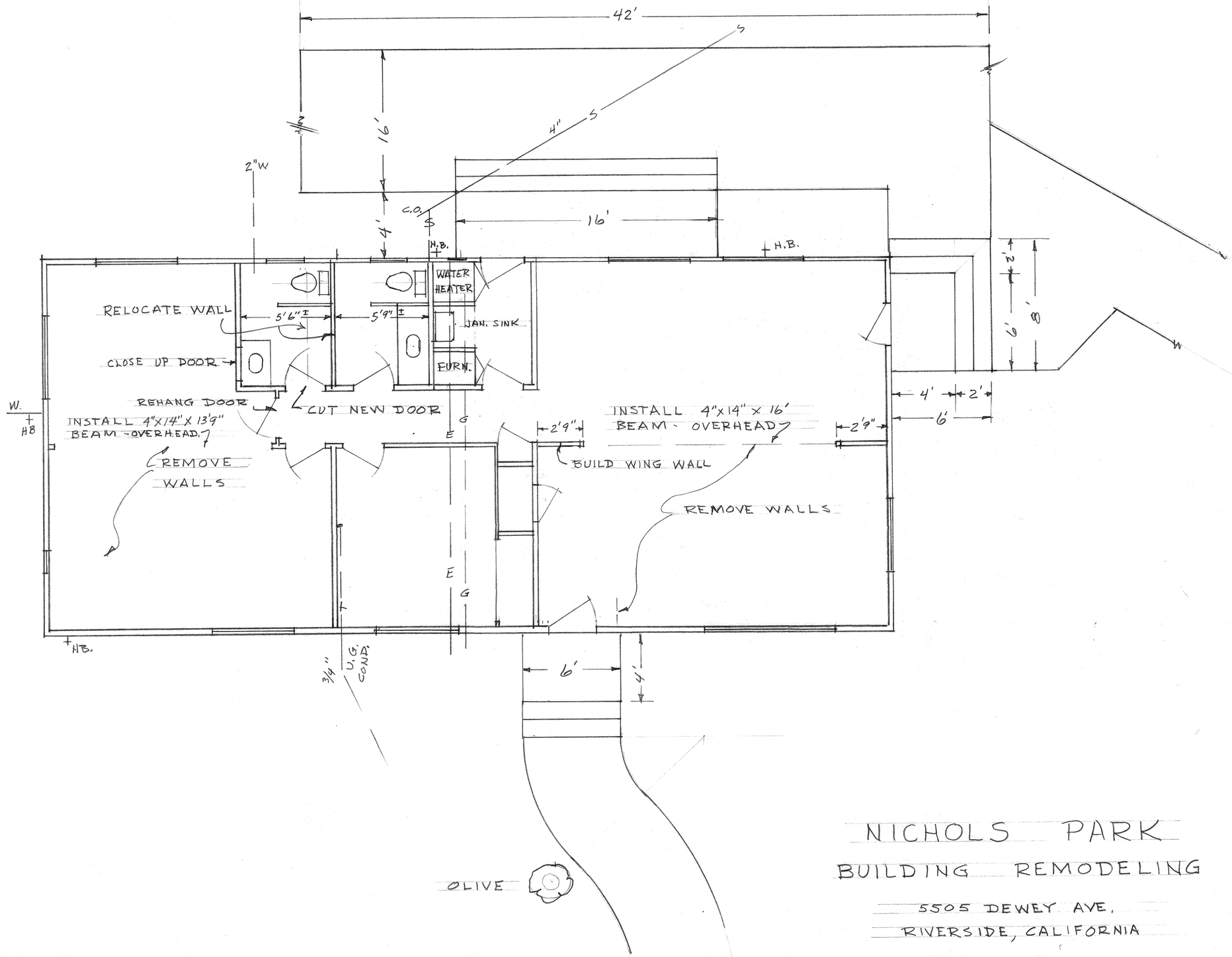

NICHOLS PARK

BUILDING REMODELING

5505 DEWEY AVE.

RIVERSIDE, CALIFORNIA

PARK & RECREATION DEPARTMENT

SCALE 1/4" = 1'

MAY 1970

N1-09

P-134-14