MT. RUBIDOUX BRIDGE

OFFERED TO THE CITY OF RIVERSIDE
AS THE

BEN H. LEWIS BRIDGE

ON OCTOBER 28, 1977

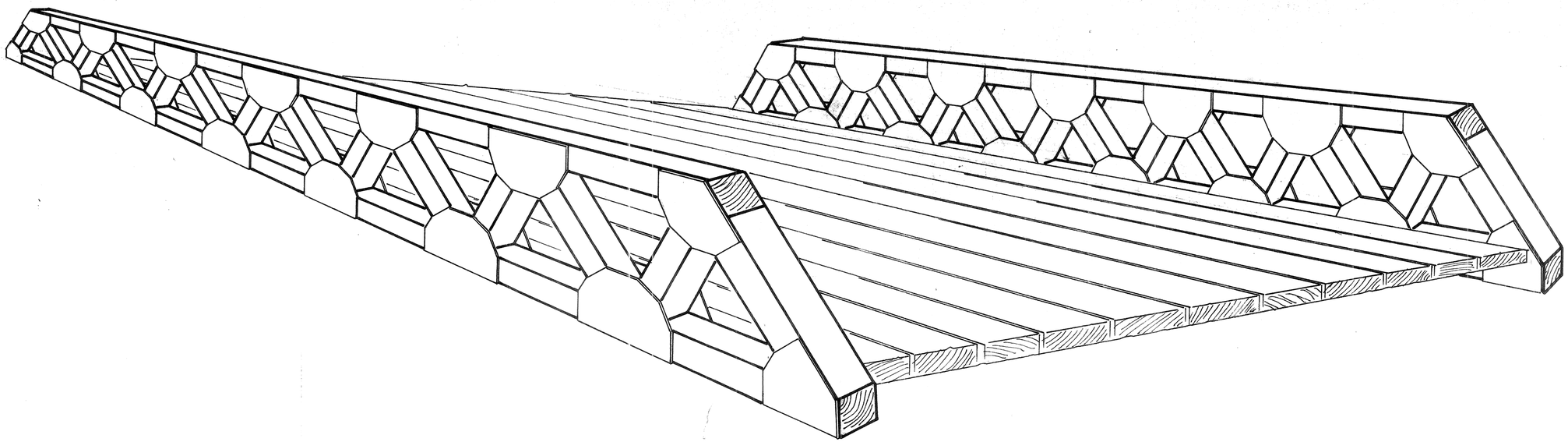

STEVEN R. SIMPSON CO.
ENGINEERS & CONSTRUCTORS
9300 DOUGLAS DR. • RIVERSIDE, CA. 92503 • 714-689-6533

NO.	REVISION	DATE

CONCEPT & APPEARANCE APPROVAL

PARK AND RECREATION DIRECTOR — DATE 11/22/77

MARK	REVISIONS	APPR.	DATE
DESIGNED BY	DRAWN BY	CHECKED BY	

CITY OF RIVERSIDE
PUBLIC WORKS DEPARTMENT

APPROVED	BY	DATE
PRINCIPAL ENGINEER		
PARK DEPARTMENT		
TRAFFIC DIVISION		
CHIEF P.W. ENGINEER		

APPROVED BY
PUBLIC WORKS DIRECTOR
DATE 11-22-77

MT. RUBIDOUX BRIDGE REPLACEMENT

HORIZ. SCALE: 1" VERT. SCALE: 1"

INDEXED R.R.

DRAWING NO. 1

R-2064

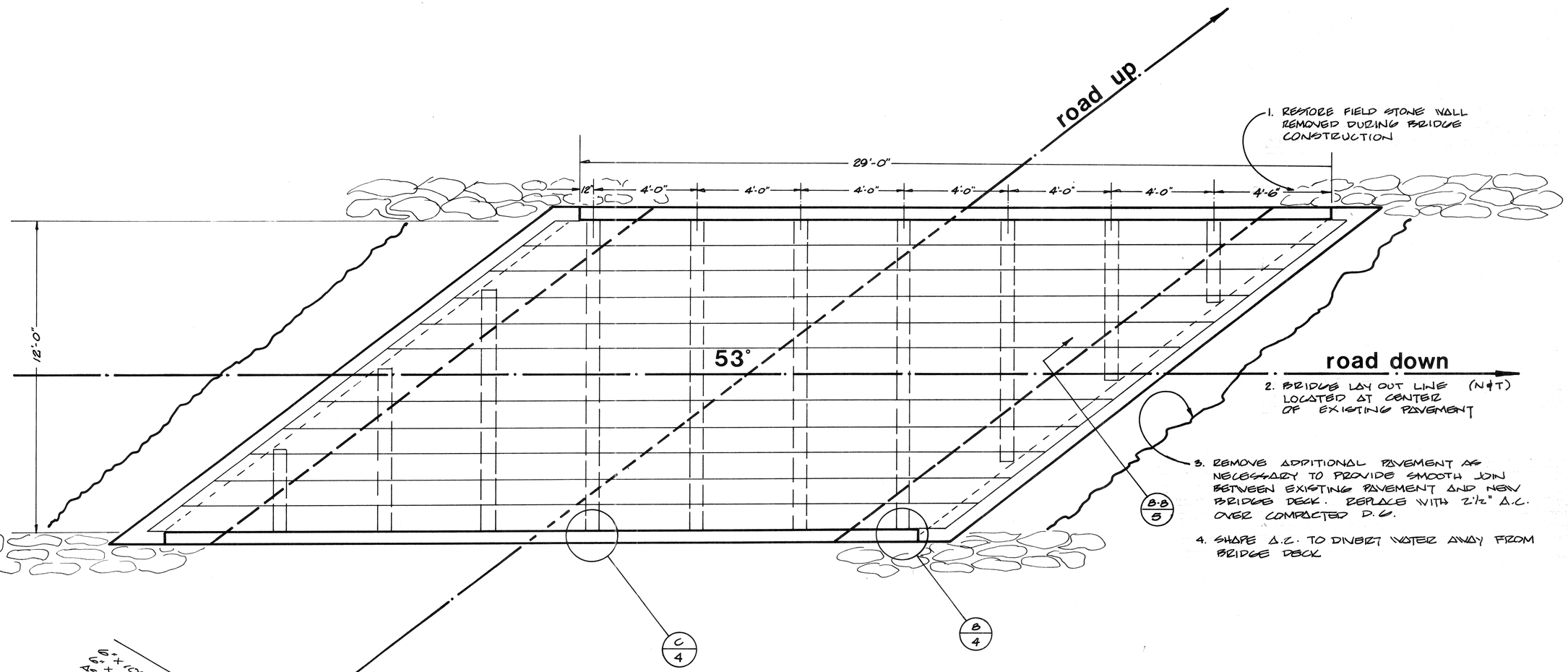

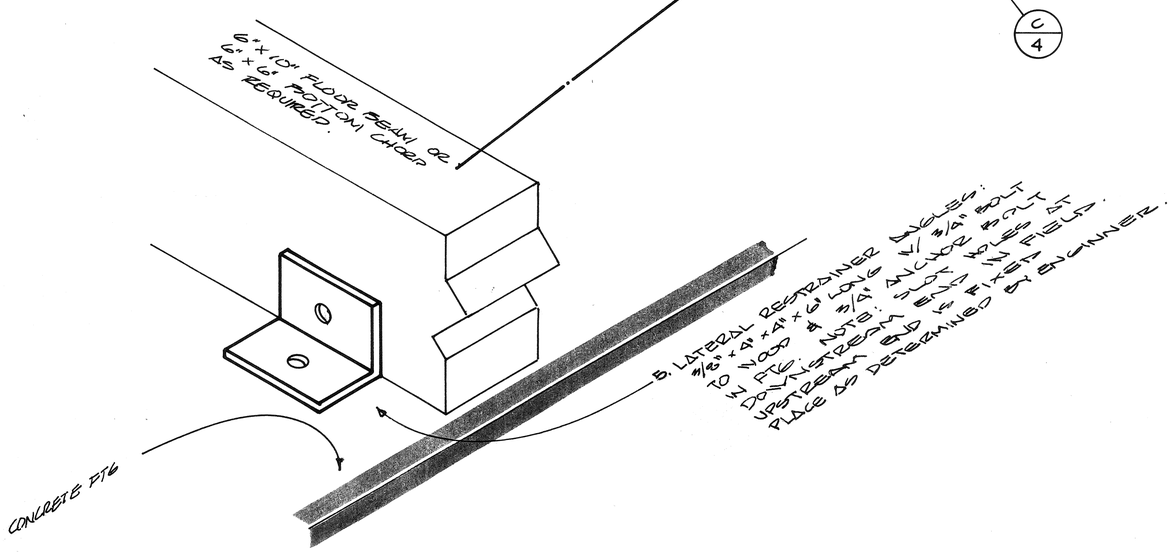

PLAN VIEW

SCALE : ½" = 1'

REGISTERED PROFESSIONAL ENGINEER STEVEN R. SIMPSON No. 23455 CIVIL STATE OF CALIFORNIA

Steven R. Simpson

STEVEN R. SIMPSON CO.
ENGINEERS & CONSTRUCTORS
9300 DOUGLAS DR. • RIVERSIDE, CA., 92503 • 714-689-6533

NO.	REVISION	DATE

CITY OF RIVERSIDE
PUBLIC WORKS DEPARTMENT

APPROVED	BY	DATE
PRINCIPAL ENGINEER		
PARK DEPARTMENT		
TRAFFIC DIVISION		
CHIEF P. W. ENGINEER		

APPROVED BY
PUBLIC WORKS DIRECTOR
DATE

MARK	REVISIONS	APPR.	DATE

DESIGNED BY DRAWN BY CHECKED BY

HORIZ. SCALE: 1" = VERT. SCALE: 1" =

DRAWING NO.
2

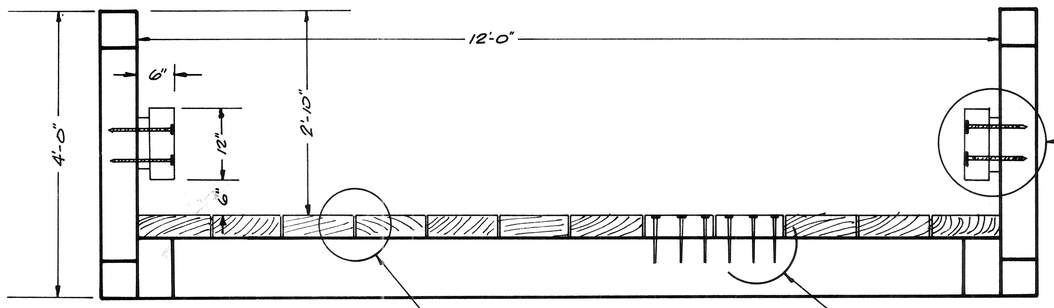

1. WHEEL STOPS: USE 4"x12" TIMBERS W/ 2"x4" SPACE BLOCKS & 2 1/2"x12" LAG BOLTS TYP @ 4'-0" ON CENTER. PLACEMENT AS DIRECTED BY PARKS DEPARTMENT.

2. USE 3 EA. 8" SPIKES PER DECK TIMBER PER FLOOR BEAM IN PRE DRILLED HOLES.

3. ALLOW MINIMUM 3/8" SPACE BETWEEN DECK TIMBERS FOR RUN OFF.

SECTION

SCALE: 1" = 1'

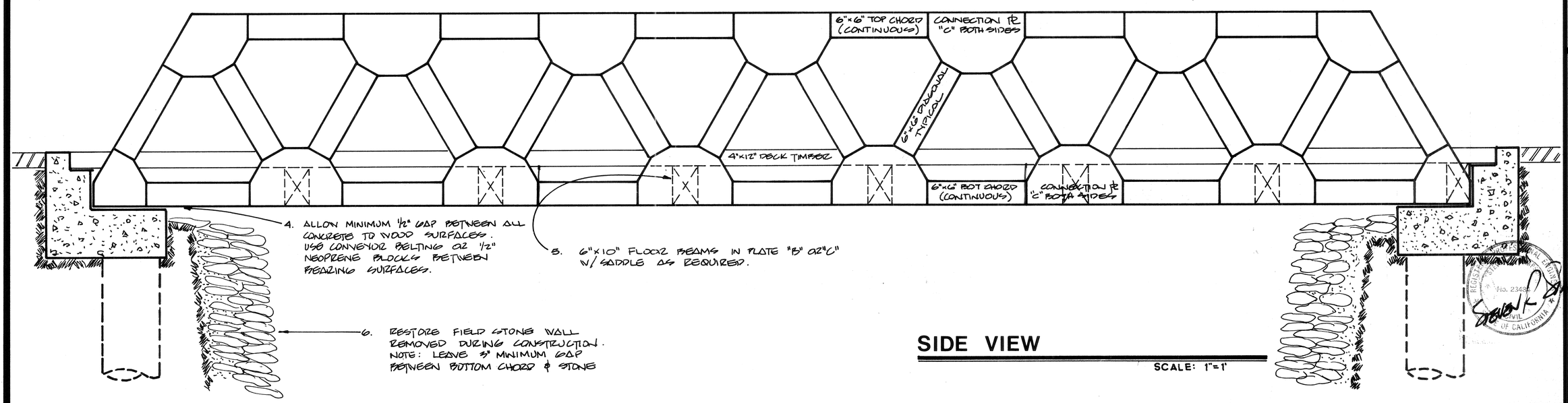

4. ALLOW MINIMUM 1/2" GAP BETWEEN ALL CONCRETE TO WOOD SURFACES. USE CONVEYOR BELTING OR 1/2" NEOPRENE BLOCKS BETWEEN BEARING SURFACES.

5. 6"x10" FLOOR BEAMS IN PLATE "B" OR "C" W/ SADDLE AS REQUIRED.

6. RESTORE FIELD STONE WALL REMOVED DURING CONSTRUCTION. NOTE: LEAVE 3" MINIMUM GAP BETWEEN BOTTOM CHORD & STONE

SIDE VIEW

SCALE: 1" = 1'

STEVEN R. SIMPSON CO.
ENGINEERS & CONSTRUCTORS
9300 DOUGLAS DR. • RIVERSIDE, CA., 92503 • 714-689-6533

NO.	REVISION	DATE

CITY OF RIVERSIDE
PUBLIC WORKS DEPARTMENT

APPROVED	BY	DATE
PRINCIPAL ENGINEER		
PARK DEPARTMENT		
TRAFFIC DIVISION		
CHIEF P.W. ENGINEER		

APPROVED BY

PUBLIC WORKS DIRECTOR

DATE

MARK	REVISIONS	APPR.	DATE

DESIGNED BY ____ DRAWN BY ____ CHECKED BY ____

HORIZ. SCALE: 1" = ____ VERT. SCALE: 1" = ____

DRAWING NO. 3

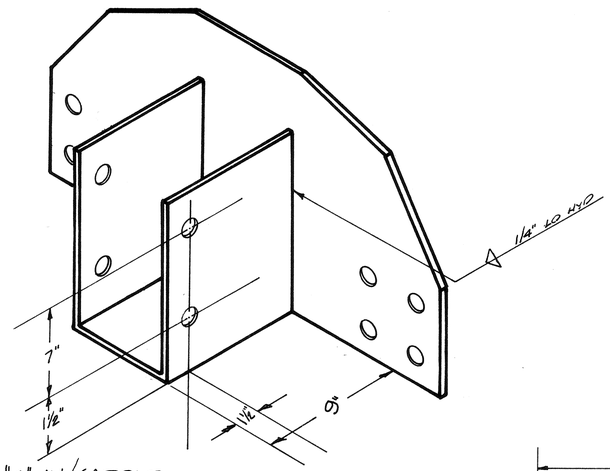

CONNECTION PL "C" W/SADDLE
NO SCALE TYPICAL FOR ALL
PLATES W/SADDLE REQ'D.

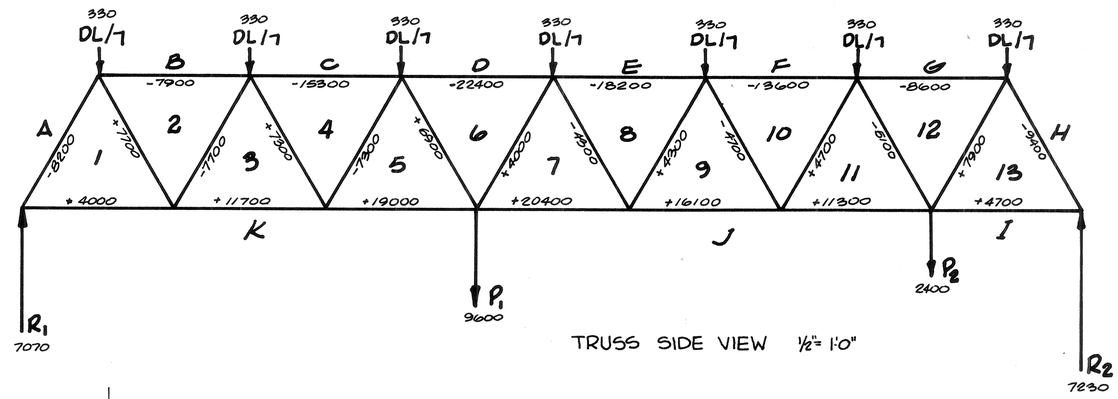

TRUSS SIDE VIEW ½" = 1'-0"

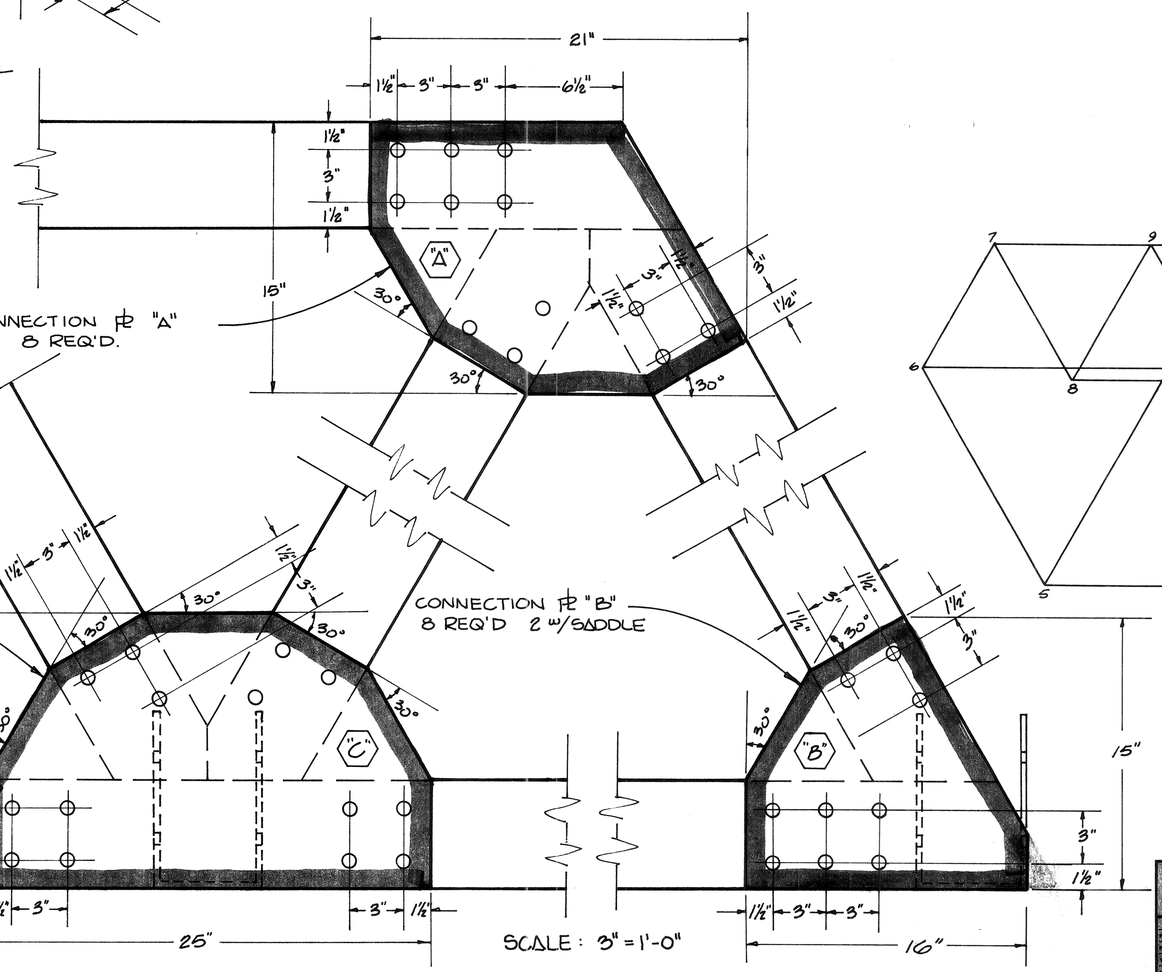

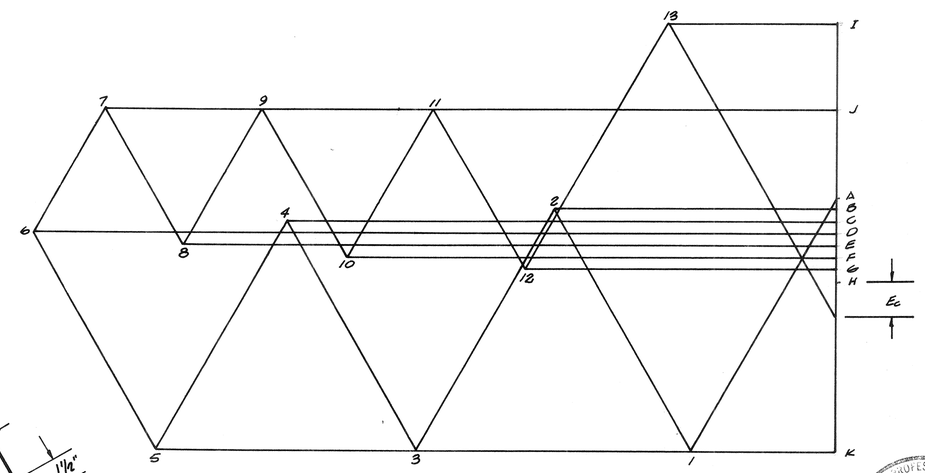

FORCE DIAGRAM 1" = 2000 lbs

REGISTERED PROFESSIONAL ENGINEER
STEVEN R. SIMPSON
No. 23944
CIVIL
STATE OF CALIFORNIA

Steven R. Simpson

MARK	REVISIONS	APPR.	DATE

DESIGNED BY ____ DRAWN BY ____ CHECKED BY ____

CITY OF RIVERSIDE
PUBLIC WORKS DEPARTMENT

	BY	DATE
APPROVED:		
PRINCIPAL ENGINEER		
PARK DEPARTMENT		
TRAFFIC DIVISION		
CHIEF F. W. ENGINEER		

APPROVED BY

PUBLIC WORKS DIRECTOR

DATE

HORIZ. SCALE: 1" = ____ VERT. SCALE: 1" = ____

STEVEN R. SIMPSON CO.
ENGINEERS & CONSTRUCTORS
9300 DOUGLAS DR. • RIVERSIDE, CA., 92503 • 714-689-6533

NO.	REVISION	DATE

DRAWING NO.

4

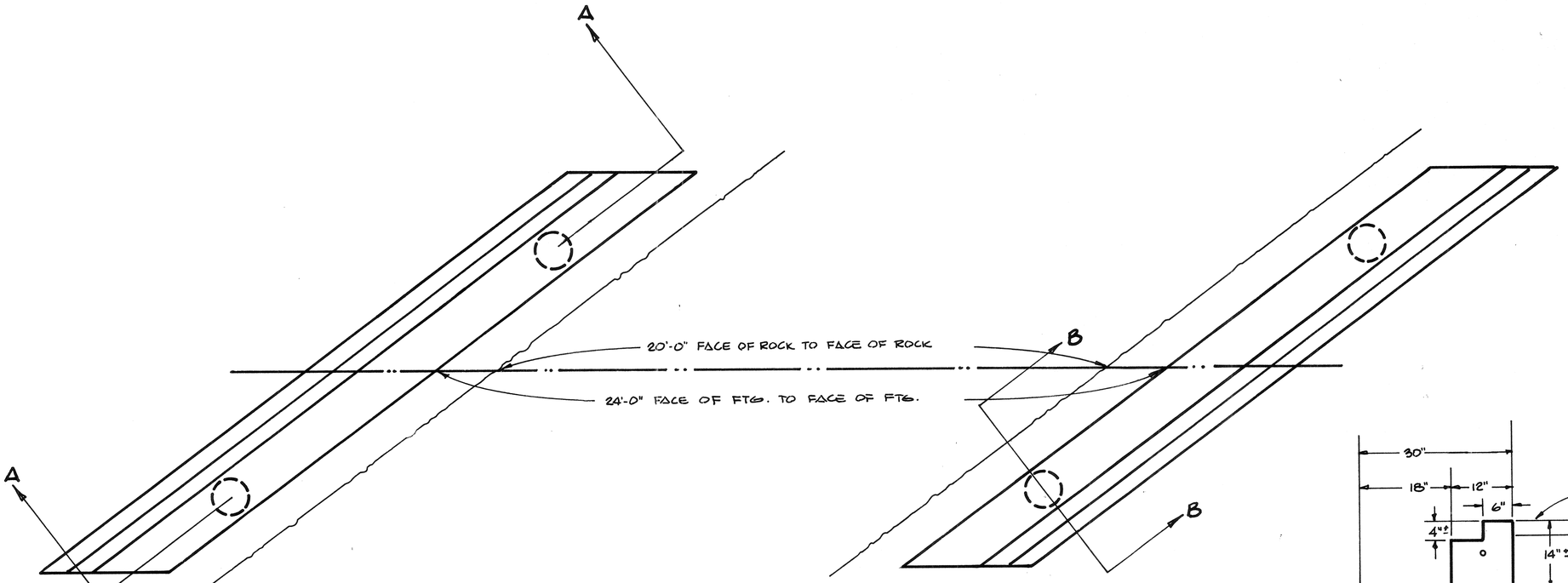

FOUNDATION PLAN

SCALE: 1/2" = 1'-0"

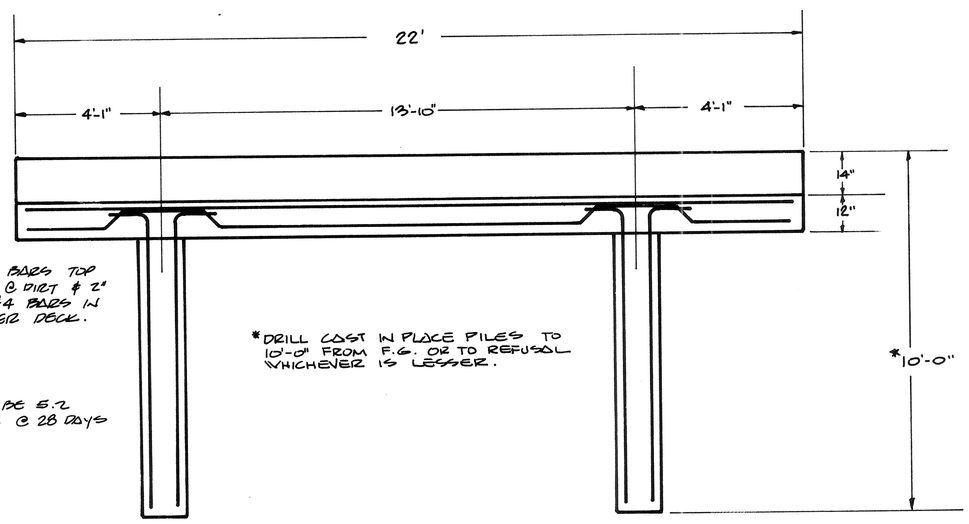

2. FTG. STEEL: 4 #4 BARS TOP & BOTTOM 3" CLR @ DIRT & 2" CLR TOP FACE. 2 #4 BARS IN BACK OF FTG UNDER DECK.

3. ALL CONCRETE TO BE 5.2 SACK 2,000 PSI @ 28 DAYS MINIMUM

*DRILL CAST IN PLACE PILES TO 10'-0" FROM F.G. OR TO REFUSAL WHICHEVER IS LESSER.

SECTION "A-A"

SCALE: 1/2" = 1'-0"

4. ALL FOUNDATION ELEVATIONS TO BE DETERMINED IN THE FIELD AS FOLLOWS:
   A. 1% MAXIMUM CROSSFALL
   B. DECK TO MEET EXISTING PAVEMENT
   C. BRIDGE TO BE IN SINGULAR PLANE

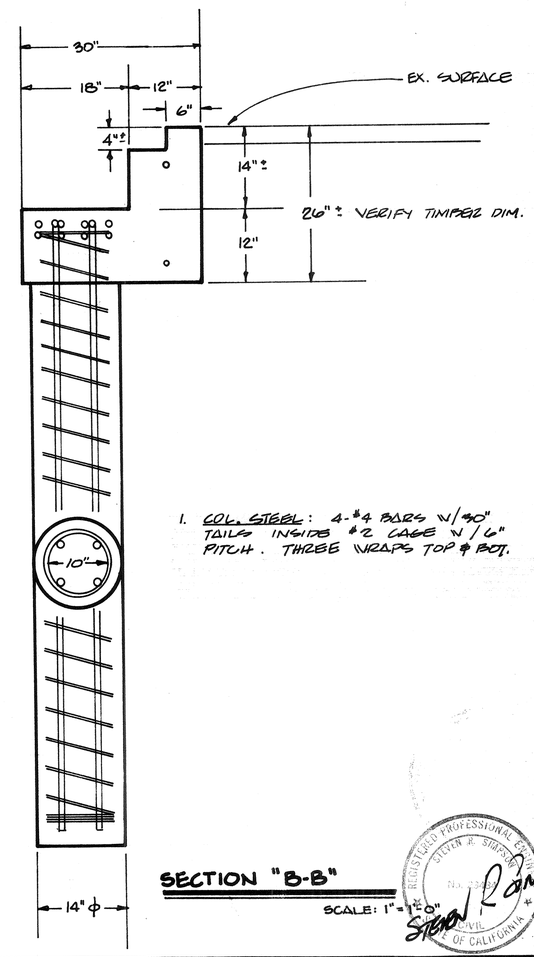

1. COL. STEEL: 4-#4 BARS W/30" TAILS INSIDE #2 CAGE W/6" PITCH. THREE WRAPS TOP & BOT.

SECTION "B-B"

SCALE: 1" = 1'-0"

REGISTERED PROFESSIONAL ENGINEER STEVEN R. SIMPSON No. 23637 CIVIL STATE OF CALIFORNIA

Steven R. Simpson

STEVEN R. SIMPSON CO.
ENGINEERS & CONSTRUCTORS
9300 DOUGLAS DR. ◦ RIVERSIDE, CA., 92503 ◦ 714-689-6533

NO.	REVISION	DATE

MARK	REVISIONS	APPR	DATE

DESIGNED BY ____ DRAWN BY ____ CHECKED BY ____

CITY OF RIVERSIDE
PUBLIC WORKS DEPARTMENT

APPROVED	BY	DATE
PRINCIPAL ENGINEER		
PARK DEPARTMENT		
TRAFFIC DIVISION		
CHIEF P. W. ENGINEER		

APPROVED BY

PUBLIC WORKS DIRECTOR

DATE

HORIZ. SCALE: 1" = ____ VERT. SCALE: 1" = ____

DRAWING NO.
5

MOUNT RUBIDOUX BRIDGE REPLACEMENT

ASSUMPTIONS:

BRIDGE DEAD LOAD = 13 lbs./SF

LIVE LOAD = 12,000 lbs. on a 132" wheel base

DYNAMIC LOAD = 2 X LIVE LOAD = 24,000 lbs.

TIMBER STRENGTH: F_c = 1,650 psi; F_t = 1,900 psi

(NLMA Grading for Coastal DF Posts & Timbers)

REACTION CALCULATIONS (PER TRUSS)

TRIBUTARY AREA = 29' X 6.5' = 188.5 SF

DEAD LOAD = 188.5 X 13 psf = 2,450 lbs.

DYNAMIC LOAD = 2 X LIVE LOAD X 0.5 = 12,000 lbs. = P

POINT LOAD ONE (P_1) = 0.8P = 9,600 lbs.

POINT LOAD TWO (P_2) = 0.2P = 2,400 lbs.

SUMMATION OF MOMENT ABOUT POINT R_1 = 0 or;

R_2 = ((9.6k)(12.5')+(2.4k)(23.5')+(2.3k)(14.5'))/29'

= 7,230 lbs.

SUMMATION OF VERTICAL FORCES = 0 or;

R_1 = DEAD LOAD + DYNAMIC LOAD - R_2

= 7,070 lbs.

INDIVIDUAL MEMBER STRESSES (SEE STRESS DIAGRAM DRAWING #4)

STRESSED MEMBER	INDICATED STRESS
A - 1	8,200 lbs (C)
1 - 2	7,700 lbs (T)
2 - 3	7,700 lbs (C)
3 - 4	7,300 lbs (T)
4 - 5	7,300 lbs (C)
5 - 6	6,900 lbs (T)
6 - 7	4,000 lbs (T)
7 - 8	4,300 lbs (C)
8 - 9	4,300 lbs (T)
9 - 10	4,700 lbs (C)
10 - 11	4,700 lbs (T)
11 - 12	5,100 lbs (C)
12 - 13	7,900 lbs (T)
13 - H	9,400 lbs (C)
1 - K	4,000 lbs (T)
2 - B	7,900 lbs (C)
3 - K	11,700 lbs (T)
4 - C	15,300 lbs (C)
5 - K	19,000 lbs (T)
6 - D	22,400 lbs (C)
7 - J	20,400 lbs (T)
8 - E	18,200 lbs (C)
9 - J	16,100 lbs (T)
10 - F	13,600 lbs (C)
11 - J	11,300 lbs (T)
12 - G	8,600 lbs (C)
13 - I	4,700 lbs (T)

MAXIMUM CHORD STRESS = 22,400 lbs and MAXIMUM DIAGONAL STRESS = 9,400 lbs both of which are MUCH LESS THAN the MAXIMUM ALLOWABLE STRESS (C) of (6" X 6" X 1,650 psi) = 59,400 lbs

CONNECTION DESIGN:

All chord connections shall be based upon a stress of 22,400 lbs.

All diagonal connections shall be based upon a stress of 9,400 lbs.

Side impact connections shall be based upon a direct impact value of 13,200 foot pounds per second, which represents vehicular impact equal to a 12,000 lb mass traveling at 15 MPH striking the bridge at an angle of 30° to the axis of the bridge.

CONNECTION DESIGN CONTINUED:

Since chord members are continuous, transfered stress will come from diagonal members only. Thus, connection stress values will not exceed the maximum value for diagonal members. Diagonal members will be stressed axially and at the point of connection, chord members will receive stresses in a near perpendicular mode.

NOTE: All values for the allowable loads in pounds per bolt for bolted timber joints in double shear are taken from the "Design Specification of National Lumber Manufacturer's Association".

For an effective bolt length of 6", the following per bolt loads apply for bolts of 3/4" diameter:

1) Parallel to grain = 2,890 lbs

With a 1.25 increase for steel plates, allowable stress = 3,612 lbs.

2) Perpendicular to grain = 1,970 lbs.

With a 1.25 increase for steel plates, allowable stress = 2,462 lbs.

AXIAL STRESS:

9,400 lbs./ 3,612 lbs. = 2.6 USE 3 ea. 3/4" bolts

NORMAL STRESS:

9,400 lbs./ 2,462 lbs. = 3.82 USE 4 ea. 3/4" bolts

CONNECTION PLATE STOCK:

Use A36 steel, then F_y = 36,000 psi and F_v = 14,500 psi

For 1/4" plate, P_{allow} = .25" X .75" X 14,500 psi = 2,719 lbs

with two plates = 2,719 X 2 = 5,438 lbs which is greater that 3,612 lbs. USE 1/4" plate stock for connection plates.

FLOOR BEAM SEAT CONNECTIONS:

ALLOWABLE COMPRESSIVE STRESS NORMAL TO GRAIN = 390 psi; Maximum floor beam load = 9,600 lbs. Therefore:

Seat area = 9,600 lbs / 390 psi = 24.61 square inches

Seat width = 6" which implies a length of 4.10". USE 6" length.

VERTICAL BOLT SPACING FOR FLOOR BEAM CONNECTION:

Floor beam depth = 10"; with 2 diameter side fiber inset, distance between bolt centers = 10"- (4 X 3/4") = 7".

Then, single connection moment resistance = 3,612 lbs X (7"/12") = 2,107 foot lbs.

TOTAL TRUSS MOMENT RESISTANCE = 2,107 X 7 conn. = 14,749 foot pounds.

14,749 is GREATER THAN 13,200 -- OK.

6" X 10" FLOOR BEAMS:

SPAN = 12'-0"; TWO POINT LOADS AT 2.5' and 9.5' respectively, both equal to 9,600 lbs. maximum.

MAXIMUM MOMENT (at center) = 9,600 X 0.5 X 2.5' = 12,000 foot pounds

MAXIMUM FIBER STRESS = Mc/I = ((12,000 X 12)(10/2))/((6)$(10)^3$/12))

= 1,440 psi which is less than 1,650 psi -- OK.

4" X 12" BRIDGE DECK:

SPAN = 3'-6"; SINGLE POINT LOAD AT CENTER; CONSIDER FIXED AT BOTH ENDS.

POINT LOAD = 9,600 lbs.

MAXIMUM MOMENT (at center) = Pl/8 = 9,600 X 3.5 / 8 = 4,200 foot pounds

MAXIMUM FIBER STRESS = Mc/I = ((4,200 X 12)(4/2))/((12)$(4)^3$)/12))

= 1,687 which approximately equals 1,650 -- OK.

FOUNDATION DESIGN:

ASSUME AN EFFECTIVE SOIL BEARING CAPACITY OF 1,000 pounds per square foot

Assume an effective footing width of 1.5' and length of 22.0', then; effective footing support capacity = 22.0 X 1.5 X 1,000 = 33,000 pounds.

33,000 pounds is MUCH GREATER THAN 19,200 or, actual soil bearing capacity required = 582 pounds per square foot.

Based upon the lack of information about the existing abutment fills, two cast in place piles have been added to each abutment foundation. Since these piles will be drilled to refusal (bedrock), a design bearing value of 12,000 psf is assumed. However, the addition of the piles is to serve a two fold purpose; First, for their axial bearing value; Second, to serve as lateral restrainers.

FOUNDATION DESIGN CONTINUED:

With the addition of the cast in place piles the following assumptions will be will be made regarding the composite design:

1) End bearing value for piles taken as 6,000 psf = 6,400 per 14" Ø pile.

2) Soil bearing capacity required taken as 218 psf (net difference).

3) 5.2 sack per cubic yard (2,000 psi) concrete will be used.

4) Intermediate grade deformed bars will be used.

CHECK FOR DIAGONAL TENSION AT PILE FACE: (assume t = 12" & d = 9")

V_v = P = 1.069 X 6,000 = 6,400 lbs.

v = V_v/bd = 6,400/(3.142)(14)(9) = 16.16 lbs.

V_{allow} = $2(f_c)^{1/2}$ = $2(2,000)^{1/2}$ = 89.0 psi

16.16 psi is MUCH LESS THAN 89.0 -- OK.

CHECK FOR MOMENT AND BOND AT PILE FACE: (assume 4 - #4 bars @ 3" OC or A_s = .8")

M = 6,400 X 0.75 = 4,800 foot pounds

f_s = M/$A_s$jd = (4,800)(12)/(0.8)(.8634)(9) = 9,266 psi

9,266 psi is MUCH LESS THAT 12,000 psi -- OK.

SAFE AXIAL LOAD CHECK: (assume 4 - #4 vertical bars & #2 spiral)

P_{safe} = $2(f_c)^{1/2}$ + (K)(f_s)(A_s) = (89.0) + (12,000)(0.8) = 23,300 pounds

23,000 is MUCH GREATER THAN the 6,400 required -- OK.

BILL OF MATERIALS:

LOCATION IN STRUCTURE	DESCRIPTION	UNIT OF MEASURE	AMOUNT REQUIRED
Footings & Piles	Rebar	Pounds	377
Footings & Piles	Concrete	Cubic Yards	8.1
Trusses	6"x6"x30'	Each	2
Trusses	6"x6"x26'	Each	2
Trusses	6"x6"x4'	Each	28
Trusses	3/4"x 7½ bolt	Each	270
Trusses	Plate "A"	Each	8
Trusses	Plate "B"	Each	8
Trusses	Plate "C"	Each	44
Trusses	6"x10" saddle	Each	14
Floor Beams	6"x10"x12'	Each	12
Decking	4"x12"x20'	Each	12
Decking	4"x12"x14'	Each	12
Decking	8" spikes	Pounds	200
Timber	Woodlife	Gallons	15
Trusses	Guardrail	Lineal Feet	80

SPECIFICATIONS:

CONCRETE: All concrete shall be minimum 2,000 psi 28 days, Plant mixed.

REINFORCING STEEL: All reinforcing steel to be intermediate grade

TIMBER: All timber to be #1 Post & Timber Grade Coastal Douglas Fir

STEEL PLATES: All plates to be Grade A-36 steel

BOLTS: All bolts to be Grade A-307 steel

WOOD PRESERVATIVE: All preservative to be "Woodlife", or equal

INSPECTION: Periodic inspection to be provided by "City Department of Public Works".

SCHEDULING OF WORK: It shall be the responsibility of the Engineer to schedule all items of work and give at least two weeks notice as required.

REGISTERED PROFESSIONAL ENGINEER — STEVEN R. SIMPSON — No. 24... — CIVIL — STATE OF CALIFORNIA

Steven R Simpson

STEVEN R. SIMPSON CO.
ENGINEERS & CONSTRUCTORS
9300 DOUGLAS DR. • RIVERSIDE, CA. 92503 • 714-689-6533

NO.	REVISION	DATE

MARK	REVISIONS	APPR.	DATE

DESIGNED BY ____ DRAWN BY ____ CHECKED BY ____

CITY OF RIVERSIDE
PUBLIC WORKS DEPARTMENT

APPROVED	BY	DATE
PRINCIPAL ENGINEER		
PARK DEPARTMENT		
TRAFFIC DIVISION		
CHIEF F. W. ENGINEER		

APPROVED BY

PUBLIC WORKS DIRECTOR

DATE ____

HORIZ. SCALE: 1" = ____ VERT. SCALE: 1" = ____

DRAWING NO.

6