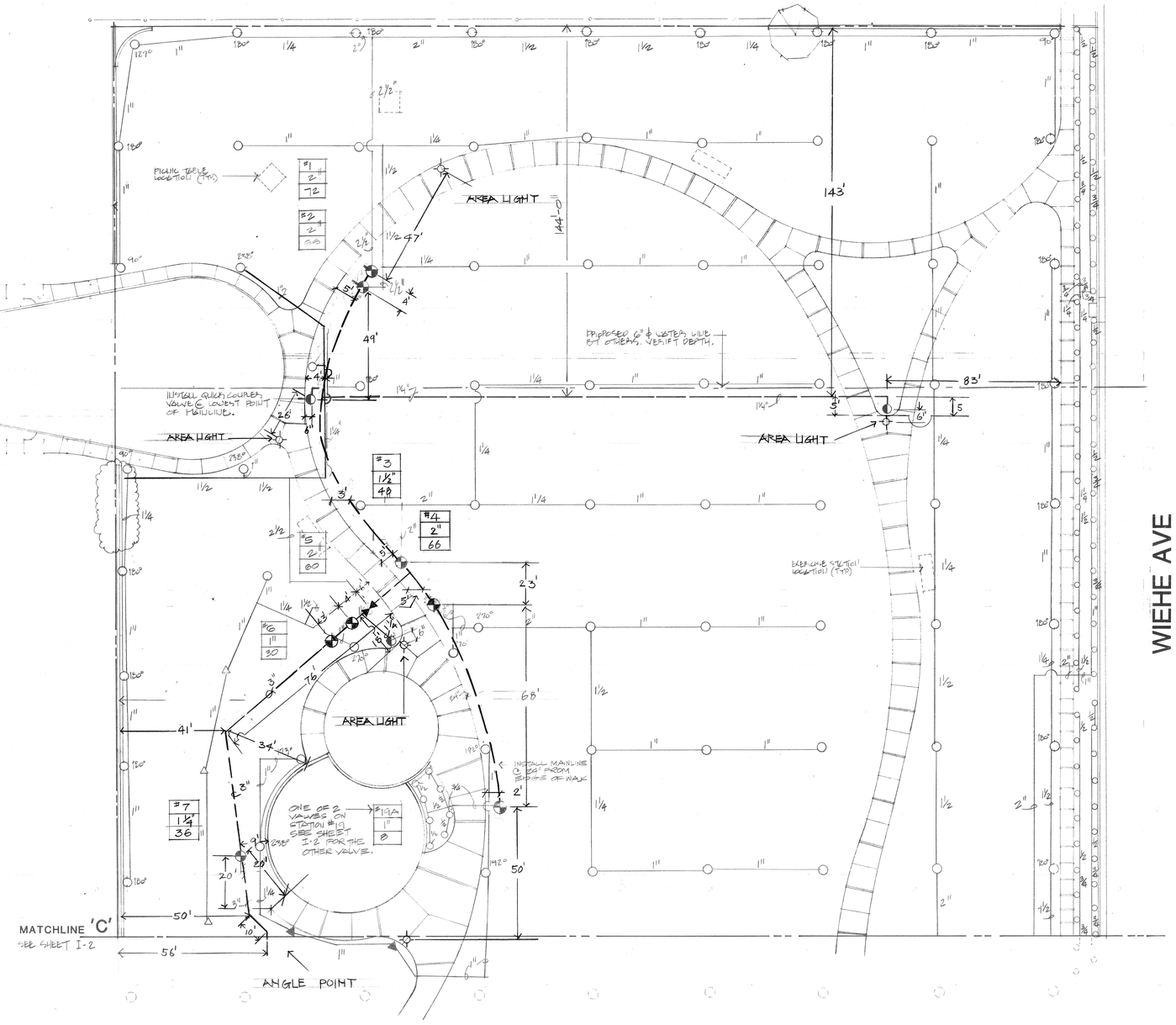

VALVE LEGEND

#1	STATION NUMBER
1½	VALVE SIZE
52	GPM

FOR IRRIGATION LEGEND SEE SHEET I-4

48 HOURS BEFORE YOU DIG CALL
Underground Service Alert
1-800-422-4133

BISHOP GRAPHICS/ACCUPRESS
REORDER NO. A35099

REGISTERED LANDSCAPE ARCHITECT
MICHAEL G. ELLIOTT 2001
STATE OF CALIFORNIA

elliott/
mcloney
landscape architecture
planning
3903 Brockton Avenue Suite 2, Riverside, California 92501, (714) 369-0700

SHEET DESCRIPTION: **IRRIGATION PLAN**

PROJECT: **MOUNTAIN VIEW PARK**

REVISIONS:	DATE: 7 MAY 86
	JOB 85047M
	DRAWN BY: RJ
	CHECKED BY: ME

SCALE: 1" : 20'-0"

NORTH

SHEET: I-1 OF: 28

ONE#20512

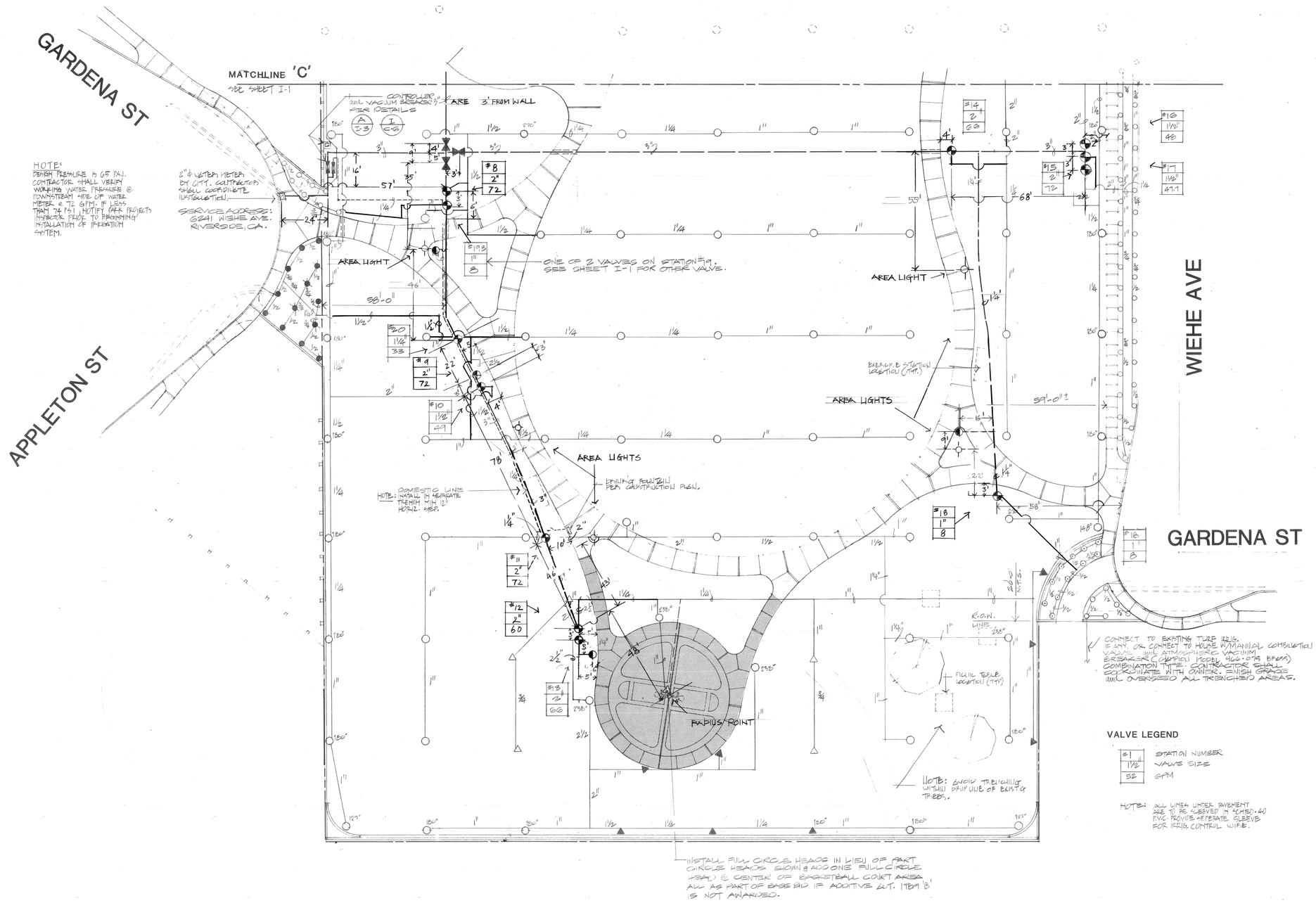

48 HOURS BEFORE YOU DIG CALL
Underground Service Alert
1-800-422-4133

elliott/maloney
landscape architecture
planning
3903 Brockton Avenue, Suite 2, Riverside, California 92501, (714) 369-0700

REGISTERED LANDSCAPE ARCHITECT
MICHAEL G. ELLIOTT 2011
STATE OF CALIFORNIA

SHEET DESCRIPTION:
IRRIGATION PLAN

PROJECT:
MOUNTAIN VIEW PARK

REVISIONS:	
	DATE: 22 MAY 86
	JOB 85047M
	DRAWN BY: RJ
	CHECKED BY: ME

SCALE: 1" : 20'-0"

NORTH

SHEET: I-2 OF: 28

DWG # P0512

BISHOP GRAPHICS/ACCUPRESS REORDER NO. A35099

DRAWING NUMBER

PLAN HOLD CORPORATION • IRVINE, CALIFORNIA
REORDER BY NUMBER 07SAR
POSITION EDGE OF PRINT ON THIS LINE

DRAWING NUMBER

PLAN HOLD CORPORATION • IRVINE, CALIFORNIA
REORDER BY NUMBER 07SAR
POSITION EDGE OF PRINT ON THIS LINE

DRAWING NUMBER

PLAN HOLD CORPORATION • IRVINE, CALIFORNIA
REORDER BY NUMBER 07SAR
POSITION EDGE OF PRINT ON THIS LINE

DRAWING NUMBER

PLAN HOLD CORPORATION • IRVINE, CALIFORNIA
REORDER BY NUMBER 07SAR
POSITION EDGE OF PRINT ON THIS LINE

DRAWING NUMBER

PLAN HOLD CORPORATION • IRVINE, CALIFORNIA
REORDER BY NUMBER 07SAR
POSITION EDGE OF PRINT ON THIS LINE

DRAWING NUMBER
N1-25

PLAN HOLD CORPORATION • IRVINE, CALIFORNIA
REORDER BY NUMBER 07SAR
POSITION EDGE OF PRINT ON THIS LINE

NOTE: SEE A&O SPRINKLER CONTROLLER SERVICE DETAIL FOR ADDITIONAL ELECTRICAL WORK

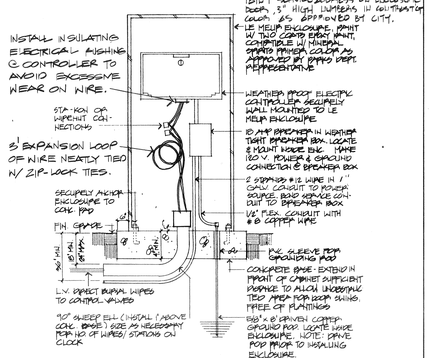

A CONTROLLER

NOTE: MODIFY OR REMOVE HANDWHEELS AS DIRECTED & TURN OVER TO PARK AND REC. DEPT. AT FINAL INSPECTION

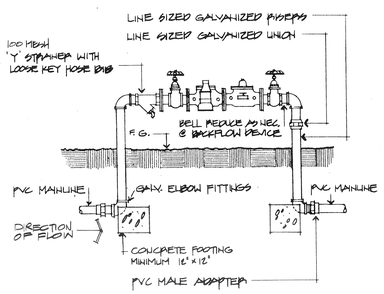

B BACKFLOW PREVENTER

NOTE: EACH VALVE SHALL TEE OR ELL DIRECTLY OFF MAINLINE - MINIMUM 3'-0" O.C. BETWEEN VALVE BOXES.

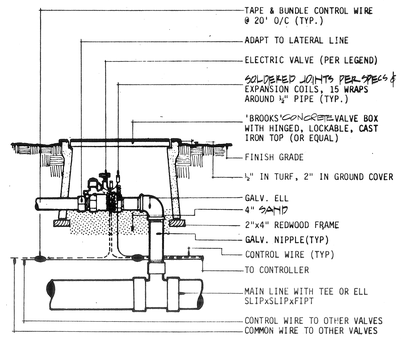

C CONTROL VALVE

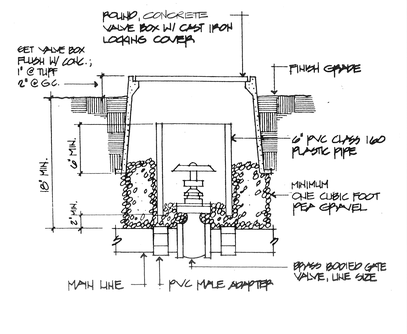

D GATE VALVE

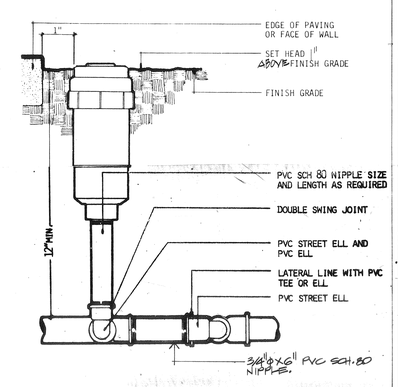

E TURF HEAD

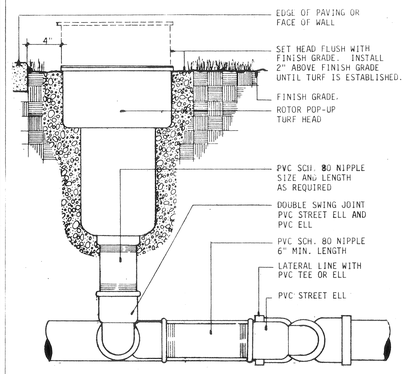

F TURF ROTOR

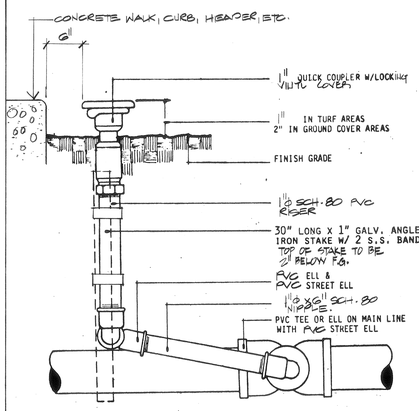

G QUICK COUPLER

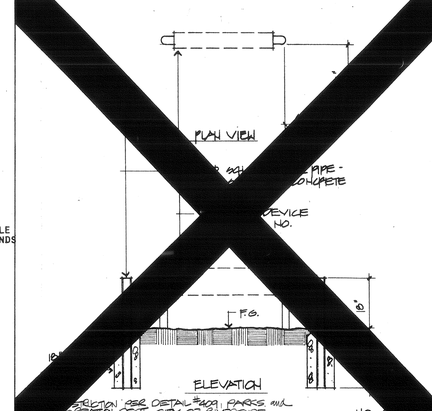

H BARRIER POSTS OMIT

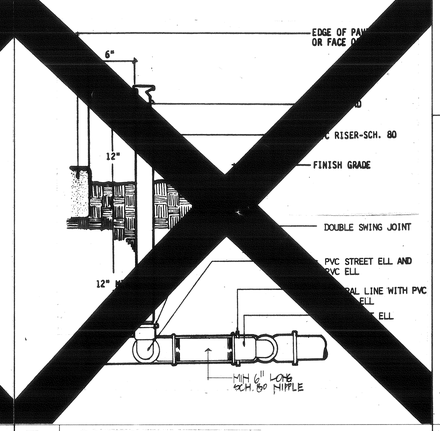

I SHRUB HEAD OMIT

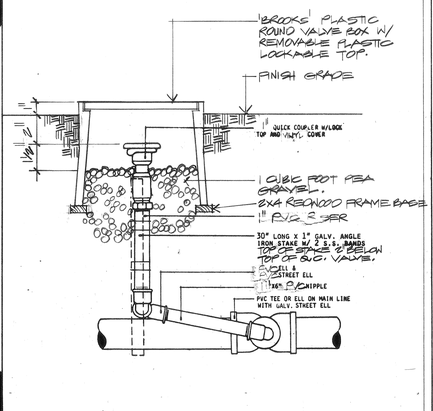

J Q.C. IN VALVE BOX

Symbol	Model	PSI	Radius	Pattern	Detail	Remarks
○	TORO 640 SERIES CHECKMATIC	40	47'	360° 6.0 GPM	F	NOZZLE #40
△	TORO 5600C SC	40	47'	6.1 GPM	F	6.0 NOZZLE
▲	TORO 5600C PC	40	47'	6.1 GPM →	F	6.0 NOZZLE
◇ ◇ ○ ○ ○	TORO 570-HP 12'F, 270°, H, 120°, Q	20	10'	1.7 / 1.3 / .9 / .4 / 90°/.6	E	4" POP-UP LOW GPM NOZZLE
○ ○	TORO 570-HP 12'Q & 12'H	20	10'	.9 / .4	E	12" POP-UP " " "
◆ ◆ ◆ ◆ ◆	TORO 570-AP 15'F, 270°, H, 120°, Q	30	15'	4.0 / 3.0 / 2.0 / 1.0 / 90°/1.4	E	4" POP-UP STANDARD "
•	TORO 570-AP BUBBLER	5	4'	1.0	E	4" POP-UP RISER
◆ ◆	TORO 570HP 15' H, Q	30	15'	2.0 / 1.0	E	12" POP-UP STAINLESS NOZZLE
M	2" WATER METER					
	2½" FEBCO #825 REDUCED PRESSURE BACKFLOW 4"&½" WILKENS "450PS" 100 SERIES, MESH STRAINER BRASS BODY				B	IRRIGATION BACKFLOW
C	GRISWOLD #2400 24 STATION CONTROLLER				A	SEE NOTE NO. 1 THIS SHEET
	GATE VALVE (LINE SIZE)				D	
	GRISWOLD #2000 SERIES REMOTE CONTROL VALVE - SIZE PER PLAN				C	ANGLE TYPE VALVE
	FEBCO/BIF 44 DLVC QUICK COUPLER VALVE				G	
	CHAMPION #B-402 LK LOOSE KEY HOSE BIBB - 3/4" HOSE and 1" PIPE CONNECTIONS				K	PROVIDE 1 KEY PER VALVE
	1" FEBCO #825Y REDUCED PRESSURE BACKFLOW w/ 1" WILKENS "450PS" 100 SERIES, MESH STRAINER BRASS BODY				B	DOMESTIC WATER BACKFLOW
	EXISTING MAINLINE					
	CLASS 200 PVC LATERAL LINE					
	CLASS 315 RIC OR CLASS 200 RUBBER GASKET RIC (PIPE LESS THAN 1½" Ø USE SCH. 40 PVC)					
	CLASS 315 PVC DOMESTIC MAIN LINE					
#1	STATION NUMBER - VALVE LABEL LEGEND					
1½"	VALVE SIZE					
50	TOTAL GPM ON SYSTEM					
•	EXIST'G IRRIGATION SPRINKLERS.					SEE NOTE NO. 2 THIS SHEET.

IRRIGATION LEGEND

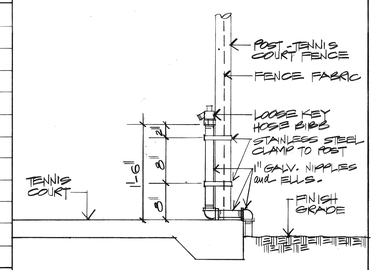

K HOSE BIBB

1 ONE CONTROLLER @ MOUNTAIN VIEW PARK and 2 @ NICHOLS PARK.

2 AT NICHOLS PARK CONTRACTOR SHALL SALVAGE ALL EXIST'G VALVE BOXES, REMOTE CONTROL VALVES, QUICK COUPLER VALVES, MANUAL VALVES, CONTROLLERS, & SPRINKLERS IN ALL AREAS TO RECEIVE NEW IRRIGATION. THE FOLLOWING QUANTITIES HAVE BEEN ESTIMATED FOR THE CITY, CONTRACTOR MAY USE THESE QUANTITIES BUT SHALL BE RESPONSIBLE FOR VERIFYING SAME IN THE FIELD & WILL BE REQUIRED TO TURN OVER THESE APPROX. QTY'S

MATERIAL	QUANTITY (APPROXIMATE) BASE BID	COMMUNITY CTR. BUTLER	ADDITIVE 'G'	ADDITIVE 'H'
SPRINKLERS	280	12	40	59
REMOTE CONTROL VALVES	27	2	1	1
QUICK COUPLER VALVES	10	1	3	—
MANUAL VALVES	5	—	—	—
VALVE BOXES	27	2	1	1
CONTROLLERS	2		—	1

EXIST'G PIPING & WIRING SHALL BE ABANDONED.

BISHOP GRAPHICS; ACCUPRESS
REORDER NO.: A30099

elliott/maloney
landscape architecture planning
3903 Brockton Avenue Suite 2 Riverside, California 92501 (714) 369-0700

REGISTERED LANDSCAPE ARCHITECT — RICHARD E. ELLIOTT 2015 — STATE OF CALIFORNIA

SHEET DESCRIPTION: Irrigation Details

PROJECT: MOUNTAIN VIEW & NICHOLS PARKS

REVISIONS	DATE 22 MAY 86
	JOB 85047M
	DRAWN BY MG/EJ
	CHECKED BY MS

SCALE: N/A

SHEET: I-4

NORTH

DWG # P0512 DWG # P0502