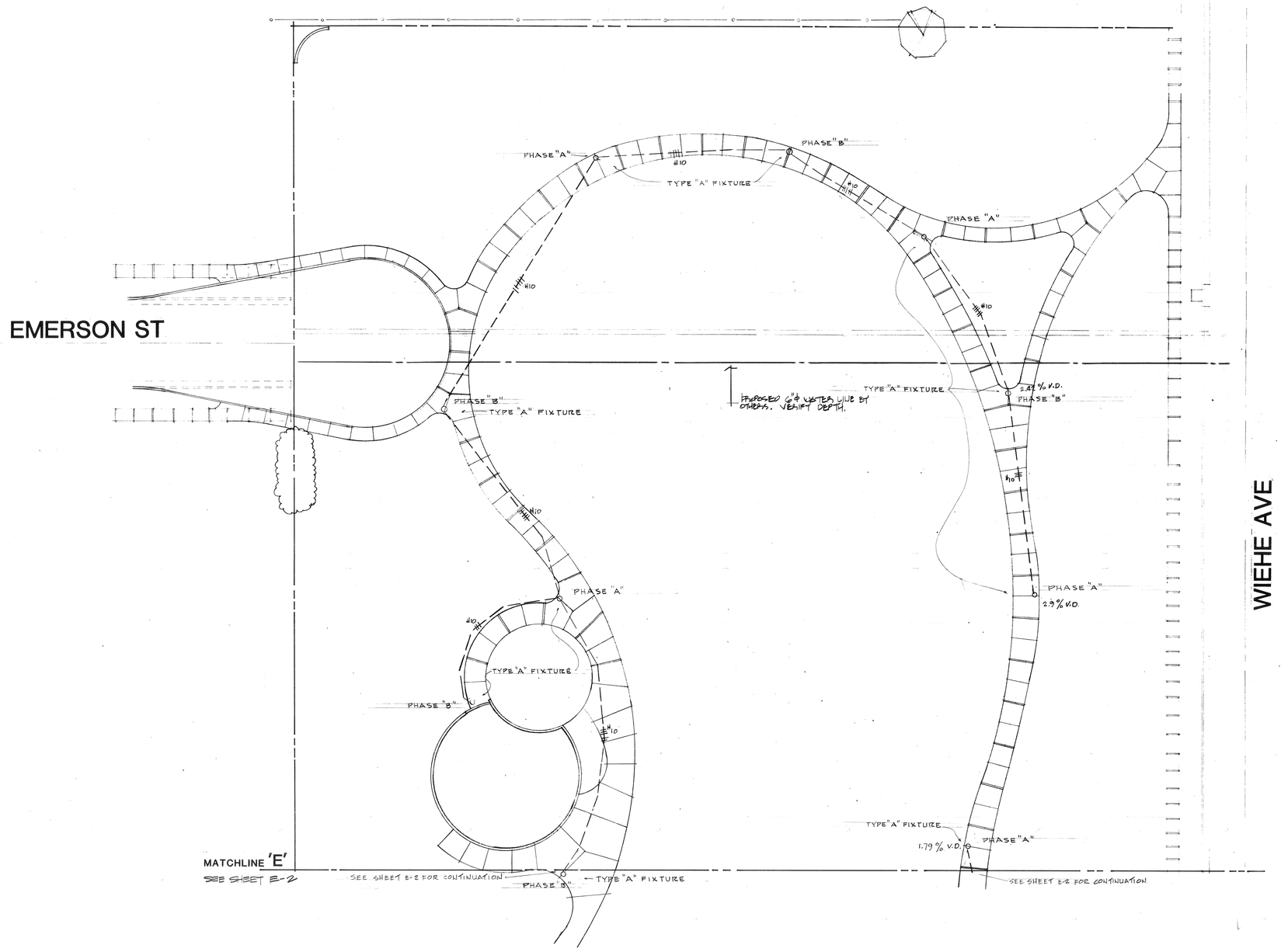

elliott/maloney
landscape architecture
planning
3903 Brockton Avenue Suite 2 Riverside California 92501 (714) 369-0700

SHEET DESCRIPTION:
LIGHTING PLAN

PROJECT:
MOUNTAIN VIEW PARK

REVISIONS:	DATE: 22 MAY 86
	JOB 85047M
	DRAWN BY: JT.
	CHECKED BY:

SCALE: 1" : 20'-0"

NORTH

SHEET: E-1 OF 28

KEN MATSUOKA E.E. INC.
479 N.Tustin Ave.
ORANGE, CALIFORNIA
(714) 633-7761 CA. Reg. #E-2617

BISHOP GRAPHICS/ACCUPRESS
REORDER NO. A35099

ONGE P0312

NOTES

1. Security light with Photocell mounted in neck of fixture.

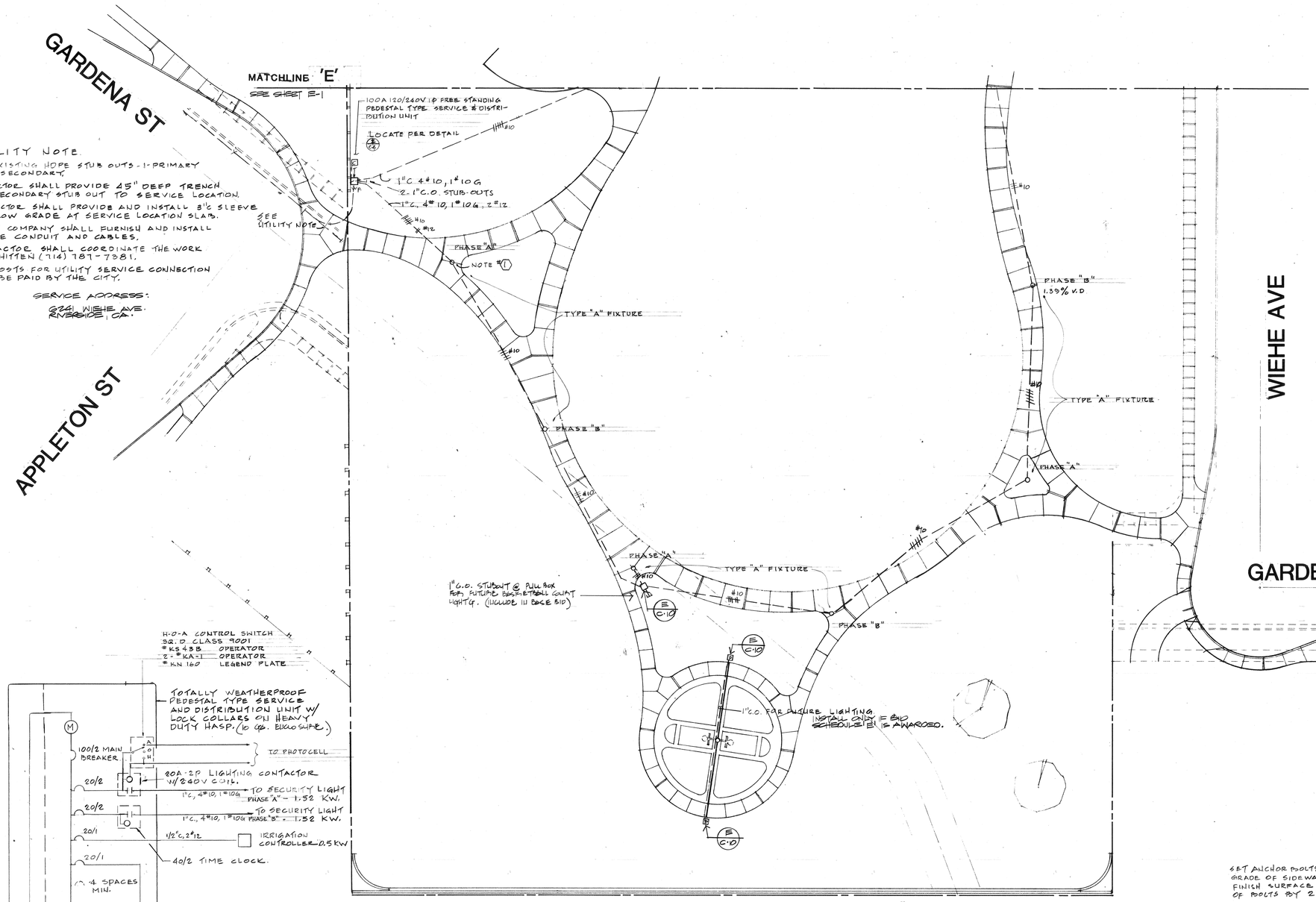

UTILITY NOTE

1. 2-2" EXISTING HDPE STUB OUTS - 1-PRIMARY AND 1-SECONDARY.
2. CONTRACTOR SHALL PROVIDE 45" DEEP TRENCH FROM SECONDARY STUB OUT TO SERVICE LOCATION.
3. CONTRACTOR SHALL PROVIDE AND INSTALL 3"C SLEEVE 18" BELOW GRADE AT SERVICE LOCATION SLAB.
4. UTILITY COMPANY SHALL FURNISH AND INSTALL SERVICE CONDUIT AND CABLES.
5. CONTRACTOR SHALL COORDINATE THE WORK BILL WHITTEN (714) 787-7381.
6. ALL COSTS FOR UTILITY SERVICE CONNECTION SHALL BE PAID BY THE CITY.

SERVICE ADDRESS:
8241 WIEHE AVE.
RIVERSIDE, CA.

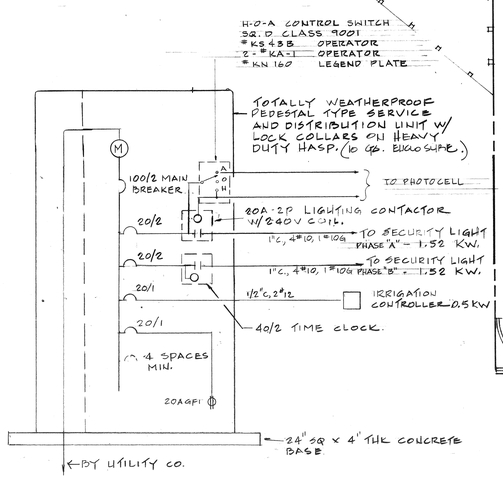

SINGLE LINE DIAGRAM

SERVICE PEDESTAL - MYERS CAT# MEUGQ-M100C/SS100. OR APPROVED EQUAL BY PACIFIC UTILITY PRODUCTS #USP-M100-112-FB MODIFIED. MODIFICATIONS INCLUDE (1) TIME CLOCK, (1) LTG. CONTACTOR, SPACE FOR (1) ADDITIONAL LTG CONTACTOR (FUTURE) AND (1) PHOTOCELL H-O-A SWITCH, AND (1) 20A GFI RECEPTACLE.

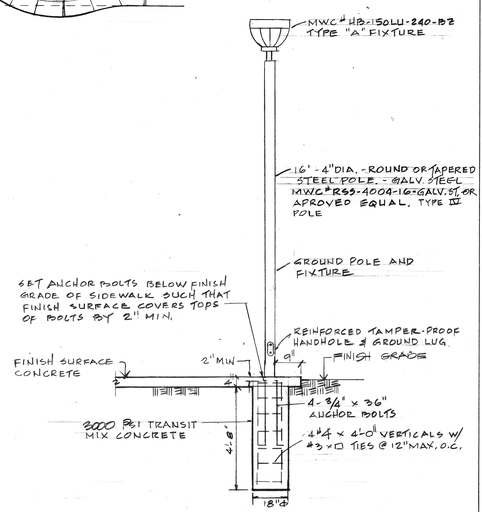

SECURITY LIGHTING STANDARD W/ TYPE "A" FIXTURE

NO SCALE

KEN MATSUOKA E.E. INC.
479 N.Tustin Ave.
ORANGE, CALIFORNIA
(714) 633-7761 CA. Reg. #E-2617

elliott/maloney
landscape architecture
planning
3903 Brockton Avenue, Suite 2, Riverside, California 92501 (714) 369-0700

SHEET DESCRIPTION:
LIGHTING PLAN

PROJECT:
MOUNTAIN VIEW PARK

REVISIONS:	DATE: 22 MAY 86
	JOB 85047M
	DRAWN BY: JT
	CHECKED BY:

SCALE: 1" : 20'-0"

NORTH

SHEET: E-2 OF 28

OWG# P0512

BISHOP GRAPHICS/ ACCUPRESS
REORDER NO. A35099