CITY OF RIVERSIDE PARK & RECREATION DEPARTMENT

mountain view & nichols parks improvements

Mountain View Park
6241 Wiehe
Riverside, CA
P# 0512

Nichols Park
5505 Dewey
Riverside, CA
P# 0502

June 1, 1988

APPROVALS

	date:
Dee W. Bachman	5/26/88
director, park & recreation	
Terry Nelson	5/26/88
park superintendent	
Ronald L. Reese	5/26/88
recreation superintendent	
Patricia X Johnson	5/26/88
park projects coordinator	

VICINITY MAP

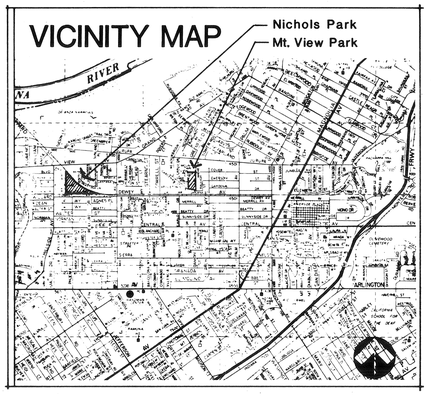

REVISIONS

INDEX

T-1 Title Sheet

D-1 Demolition Plan - Nichols
G-1 Demolition & Grading - Mt. View
G-2 Demolition & Grading - Mt. View
G-3 Grading Plan - Nichols
C-1 Construction Plan - Mt. View
C-2
C-3
C-4
C-5 Construction Details
C-6
C-7
C-8 Construction Plan - Nichols
C-9 Construction Details
C-10 Construction Details
I-1 Irrigation Plan - Mt. View
I-2 Irrigation Plan - Mt. View
I-3 Irrigation Plan - Nichols
I-4 Irrigation Details
L-1 Planting Plan - Mt. View
L-2 Planting Plan - Mt. View
L-3 Planting Plan - Nichols
L-4 Planting Details

E-1 Lighting Plan - Mt. View
E-2 Lighting Plan Mt. View
E-3 Lighting Plan - Nichols
E-4 Lighting Details
E-5 Single Line

elliott/maloney
landscape architecture • planning
3903 Brockton Avenue, Suite 2, Riverside, California 92501, (714) 369-0700

GENERAL NOTES:

1. All grading shall conform to Chapter 70 of the EVERETT CITY ADOPTED EDITION OF THE UNIFORM BUILDING CODE.

2. All provisions of the preliminary soils report prepared by John R. Byerly, Inc. dated MAY 27, 1986 shall be complied with during grading operations.

3. This plan is for grading purposes only. Issuance of a permit based on this plan does not constitute approval of driveway locations or sizes, RIGHT OF WAY structural sections or layout, building locations, off-site drainage facilities or other items not related directly to the basic grading operation.

4. Certification from the registered (civil engineer) stating that the grading has been completed per the approved plan, and a compaction report from the soils engineer on any fill areas are required prior to building permits being issued.

5. Contractor is responsible for erosion, dust and temporary drainage control during grading operations.

6. All on-site walls shown on this plan require separate review, approval and a building permit from the Building Division, Planning Department. ~~Any necessary retaining walls on the perimeter of this site shall be in place and approved by the building inspector prior to issuance of the grading permit.~~

7. All improvements constructed in the public right-of-way will require a separate ~~construction~~ permit and inspection from the Public Works Department.

8. All walls, fences, structures and/or appurtenances adjacent to this project are to be protected in place. If grading operations damage or adversely affect said items in any way, the contractor and/or developer is responsible for working out an acceptable solution to the satisfaction of the affected property owner(s).

9. IT IS THE SOILS ENGINEER'S RESPONSIBILITY TO OBSERVE AND PERFORM COMPACTION TESTS DURING THE GROUND TO EVALUATE THE PREPARATION OF THE NATURAL GROUND SURFACE TO RECEIVE THE FILL AND THE COMPACTION ATTAINED IN THE FILL, INCLUDING FILL AREAS OUTSIDE THE BUILDING PADS AND ON ALL FILL SLOPES.

10. Contractor shall coordinate with City Public Utilities Water Department for installation of new water main line which will be installed through park, connecting existing lines on Emerson Street located on the East and Wiehe Avenue on the west side of the park. This work will be performed by City forces at City expense.

Contractor shall schedule and coordinate with City for installation of water line, which will begin upon receiving approval of site rough grading. City forces shall be allowed access to site for a two (2) week period. Contractor shall shut down work in this end of the park, confining work to the South end of the site for this 2 week period.

Upon completion of water line installation, contractor shall have the right to inspect water departments work and approve prior to accepting.

NOTE:

1- EXIST'G CONTOURS ARE SHOWN @ .5' INTERVALS FOR CONTRACTOR INFORMATION.

2- PROPOSED CONTOURS ARE SHOWN @ 1' INTERVALS FOR EASE IN PRODUCT INFORMATION.

3- ALL BLOCK WALLS & FENCES SHOWN ON CONST. PLAN ARE TO BE INSTALLED PRIOR TO THE START OF ANY DEMO OR GRADING WORK.

4- CROSS SLOPES ON ALL WALKS SHALL NOT EXCEED 2%.

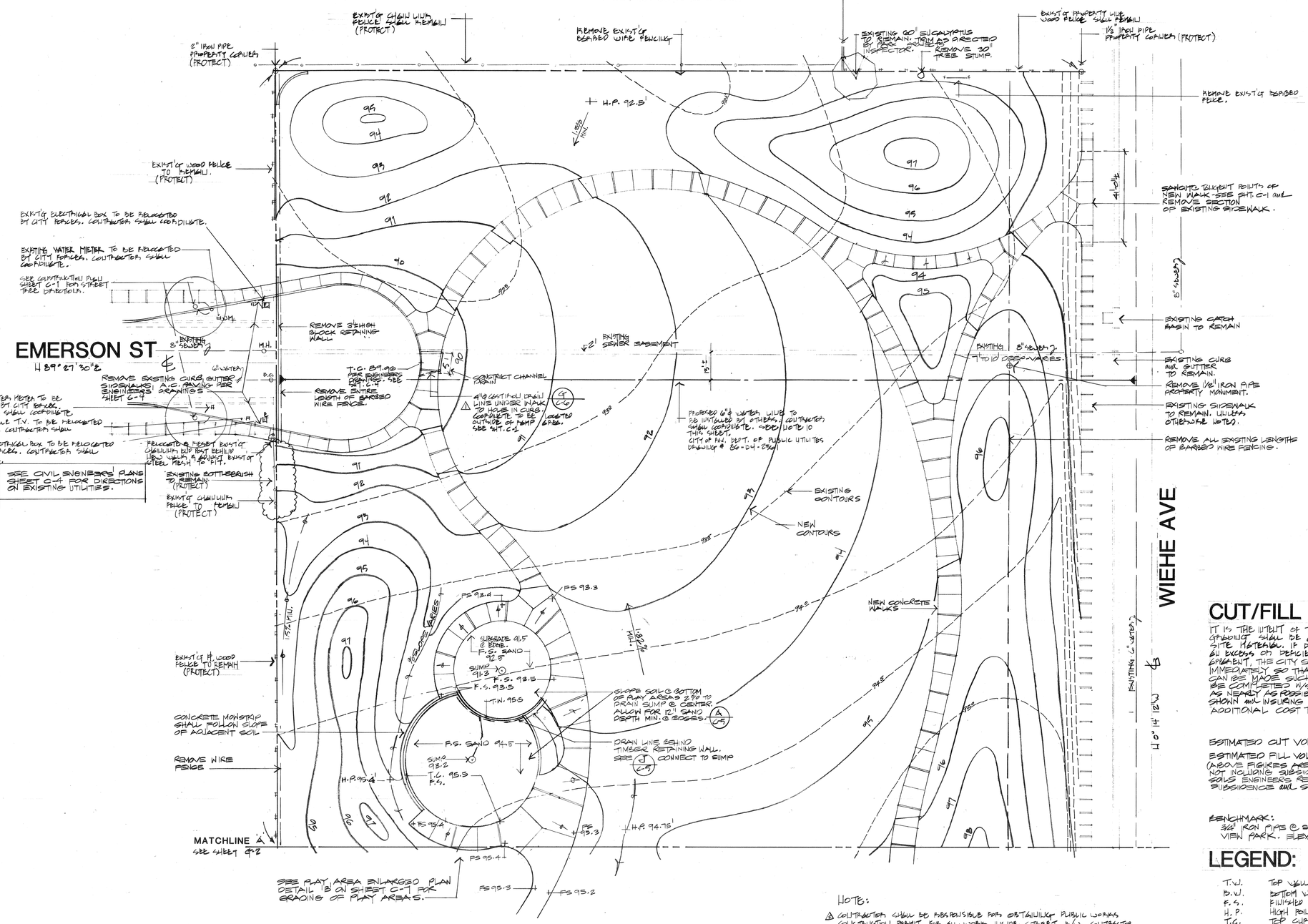

NOTE:

4 CONTRACTOR SHALL BE RESPONSIBLE FOR OBTAINING PUBLIC WORKS CONSTRUCTION PERMIT FOR ALL WORK INSIDE STREET R/W. CONTRACTOR SHALL PAY ALL FEES.

CUT/FILL VOLUMES

IT IS THE INTENT OF THE DRAWINGS THAT THE GRADING SHALL BE A BALANCED OPERATION W/ SITE MATERIAL. IF DURING GRADING OPERATIONS AN EXCESS OR DEFICIENCY OF EARTH BECOMES APPARENT, THE CITY SHALL BE NOTIFIED IN WRITING IMMEDIATELY SO THAT ADJUSTMENTS TO GRADES CAN BE MADE SUCH THAT THE GRADING SHALL BE COMPLETED W/SITE MATERIAL CONFORMING AS NEARLY AS POSSIBLE TO THE FINISH GRADES SHOWN AND INSURING POSITIVE DRAINAGE WITHOUT ADDITIONAL COST TO THE CITY.

ESTIMATED CUT VOLUME = 4800 CUBIC YARDS

ESTIMATED FILL VOLUME = 4100 CUBIC YARDS

(ABOVE FIGURES ARE RAW EARTH VOLUMES NOT INCLUDING SUBSIDENCE SHRINKAGE. SEE SOILS ENGINEERS REPORT FOR ESTIMATED SUBSIDENCE AND SHRINKAGE.)

BENCHMARK:
3/4" IRON PIPE @ S.W. CORNER OF MOUNTAIN VIEW PARK. ELEVATION = 796.24'.

LEGEND:

T.W. TOP WALL
B.W. BOTTOM WALL
F.S. FINISHED SURFACE
H.P. HIGH POINT
T.C. TOP CURB

SINGLE Ø DIRECTION WATER FLOW
DIRECTION WATER FLOW

EXIST'G CONTOURS
PROPOSED 1' CONTOURS

PLANNING DEPARTMENT
NO ENG REVIEW REQUIRED
Kathleen Dale 7-1-88
CHECKED DATE

48 HOURS BEFORE YOU DIG CALL
Underground Service Alert
1-800-422-4133

REGISTERED LANDSCAPE ARCHITECT MICHAEL G. ELLIOTT 2015 STATE OF CALIFORNIA
elliott/maloney
landscape architecture
planning
3903 Brockton Avenue, Suite 2, Riverside California 92501 (714) 369-0700

SHEET DESCRIPTION: DEMOLITION and GRADING PLAN

PROJECT: MOUNTAIN VIEW PARK

REVISIONS	
6-30-87 ME	DATE 28 MAY 86
6-30-88 ME	JOB 8504ZM
	DRAWN BY: RJ
	CHECKED BY: ME

SCALE: 1" : 20'-0"

NORTH

SHEET: G-1 OF: 3

RNG # R0512

BISHOP GRAPHICS/ACCUPRESS REORDER NO. A3509

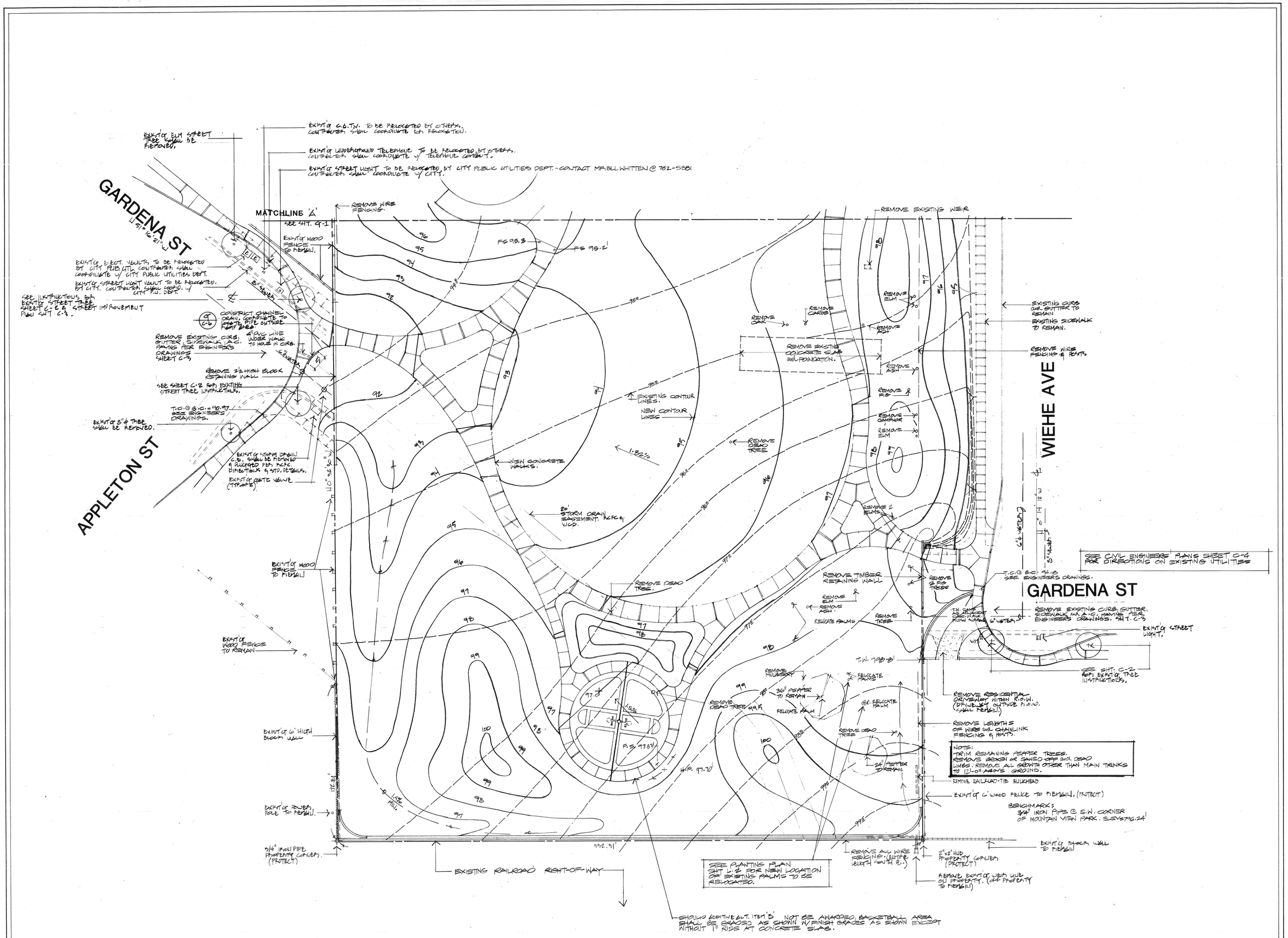

REGISTERED LANDSCAPE ARCHITECT
MICHAEL G. ELLIOTT
5-29-86
EXP.
STATE OF CALIFORNIA

elliott/ maloney
landscape architecture
planning
3933 Brockton Avenue, Suite 2, Riverside, California 92501, (714) 369-0700

SHEET DESCRIPTION: DEMOLITION and GRADING PLAN

PROJECT: MOUNTAIN VIEW PARK

REVISIONS:	DATE: 23 MAY 86
	JOB: 85047M
	DRAWN BY: RJ
	CHECKED BY: MG

SCALE: 1" : 20'-0"

NORTH

SHEET: G-2 OF: 28

DWG # 90 516

BISHOP GRAPHICS / ACCUPRESS
REORDER NO. A35099

EXERCISE STATION INSTALLATION
CONTRACTOR SHALL REVIEW LOCATIONS OF IRRIGATION MAINLINES PRIOR TO INSTALLATION OF EXERCISE STATIONS & TAKE PRECAUTIONS TO AVOID CONFLICTS.

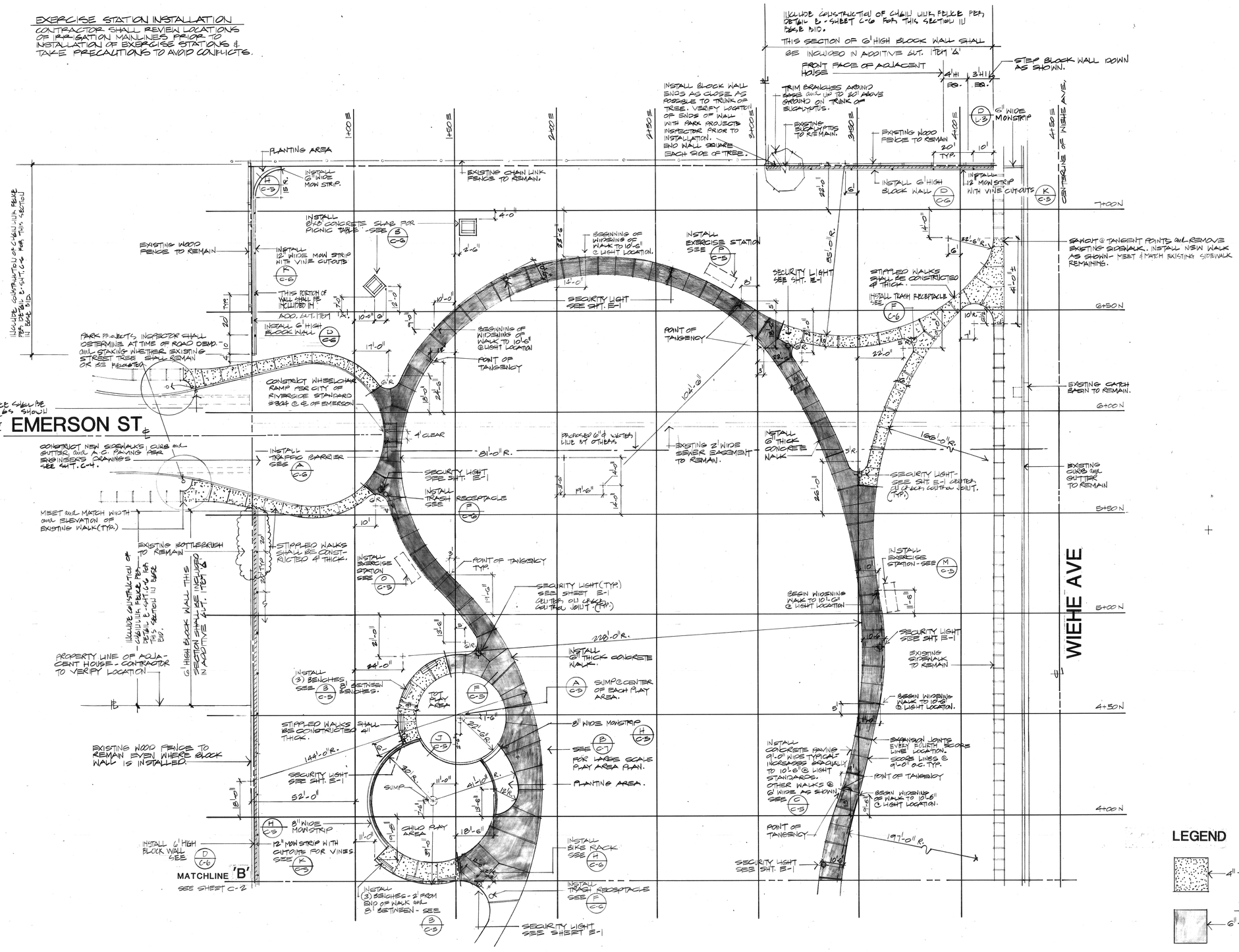

ALL 6' HIGH BLOCK WALLS & CHAIN LINK FENCE ENCLOSED IN CONTRACT SHALL BE INSTALLED PRIOR TO BEGINNING OF DEMOLITION & GRADING OPERATIONS.

LEGEND

- 4" THICK WALK
- 6" THICK WALK

48 HOURS BEFORE YOU DIG CALL
Underground Service Alert
1-800-422-4133

NORTH

SCALE: 1" : 20'-0"

SHEET: C-1 OF: 28

ONG #70512

REGISTERED LANDSCAPE ARCHITECT
STATE OF CALIFORNIA
elliott/maloney
landscape architecture
planning
3903 Brockton Avenue, Suite 2, Riverside, California 92501, (714) 369-0700

PROJECT: MOUNTAIN VIEW PARK

SHEET DESCRIPTION: CONSTRUCTION PLAN

REVISIONS:	
	DATE: 23 MAY 86
	JOB: 85047M
	DRAWN BY: RJ
	CHECKED BY: ME

BISHOP GRAPHICS/ACCUPRESS
REORDER NO. A35099

EXERCISE STATION INSTALLATION
CONTRACTOR SHALL REVIEW LOCATIONS OF IRRIGATION MAINLINES PRIOR TO INSTALLATION OF EXERCISE STATIONS & TAKE PRECAUTIONS TO AVOID CONFLICTS

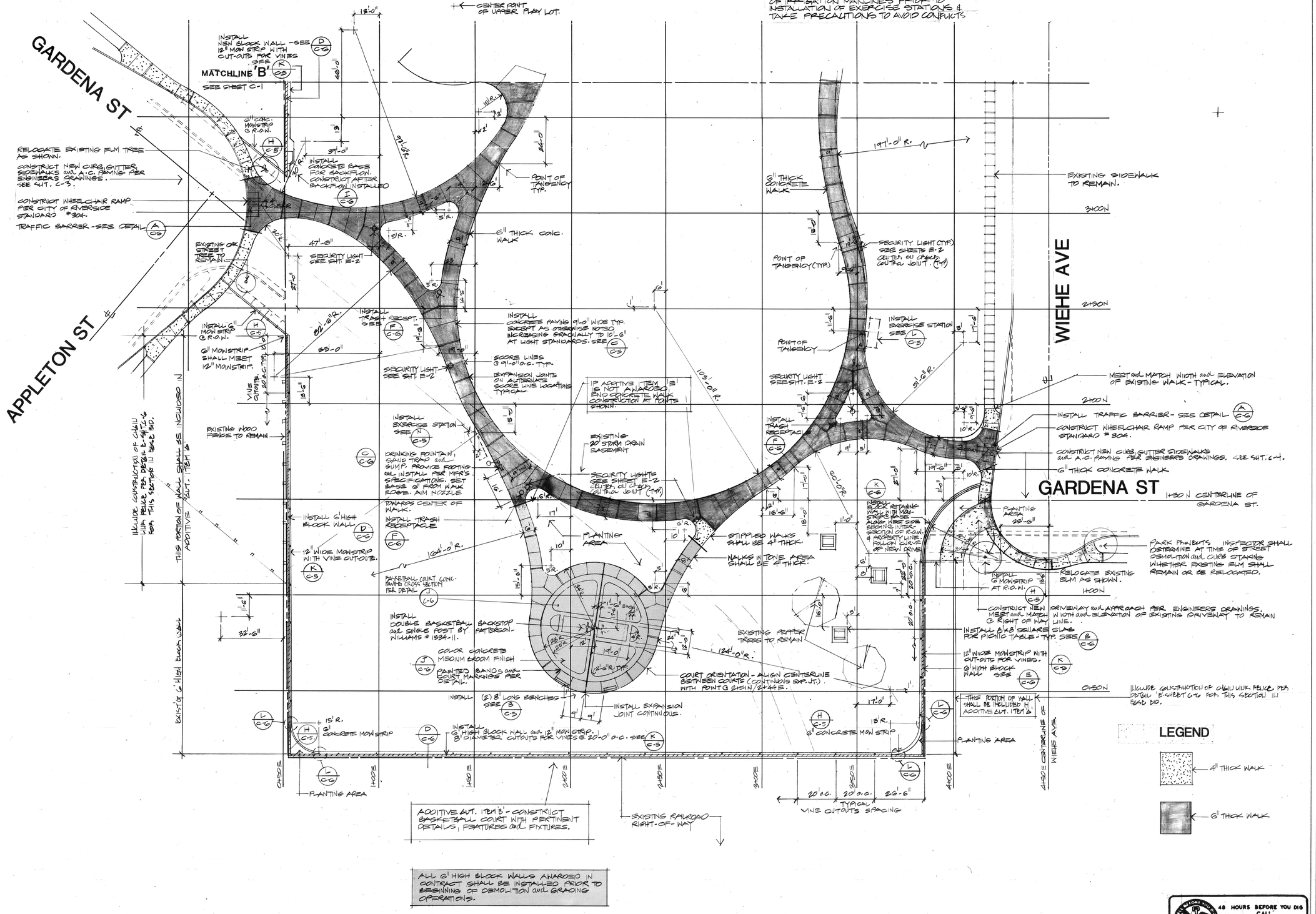

ALL 6' HIGH BLOCK WALLS AWARDED IN CONTRACT SHALL BE INSTALLED PRIOR TO BEGINNING OF DEMOLITION AND GRADING OPERATIONS.

48 HOURS BEFORE YOU DIG CALL
Underground Service Alert
1-800-422-4133

REGISTERED LANDSCAPE ARCHITECT
MICHAEL E. ELLIOTT
STATE OF CALIFORNIA
elliott/maloney
landscape architecture
planning
3903 Brockton Avenue, Suite 2, Riverside, California 92501, (714) 369-0700

SHEET DESCRIPTION: CONSTRUCTION PLAN

PROJECT: MOUNTAIN VIEW PARK

REVISIONS	DATE 23 MAY 86
	JOB 85047M
	DRAWN BY: R.J.
	CHECKED BY: MIE

SCALE: 1" : 20'-0"

NORTH

SHEET: C-2 OF: 28

ONE # R0512

BISHOP GRAPHICS / ACCUPRESS
REORDER NO. A35099

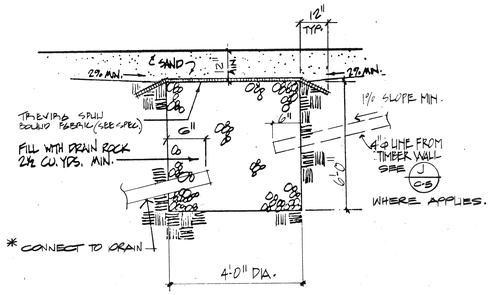

*CONNECTION TO DRAIN SYSTEM OCCURS ONLY @ NICHOLS PARK. SEE NICHOLS PARK GRADING PLAN FOR INVERT ELEVATION @ POINT DRAIN PIPE MEETS SUMP.

A PLAY AREA SUMP

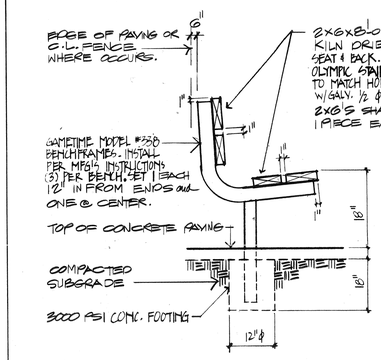

B BENCH

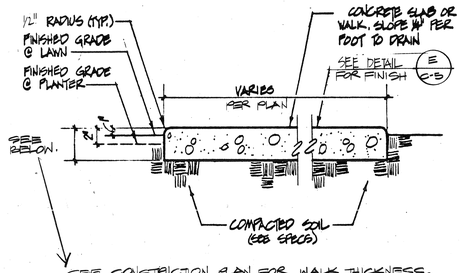

SEE CONSTRICTION PLAN FOR WALK THICKNESS. WALKS ON WHICH MAINTENANCE VEHICLES WILL BE DRIVEN SHALL BE 6" THICK. OTHERS SHALL BE 4" THICK.

C CONCRETE WALKS

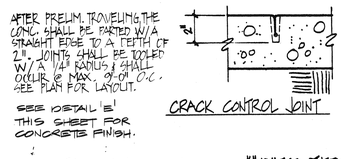

CRACK CONTROL JOINT

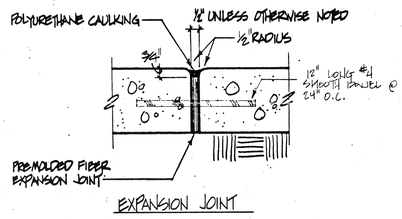

EXPANSION JOINT

D CONTROL & EXP. JOINTS

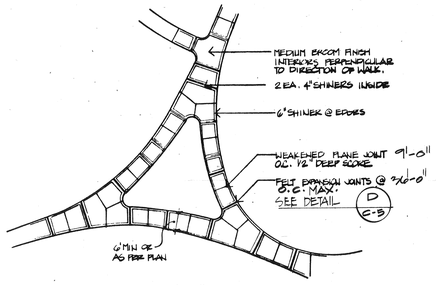

E CONCRETE FINISH

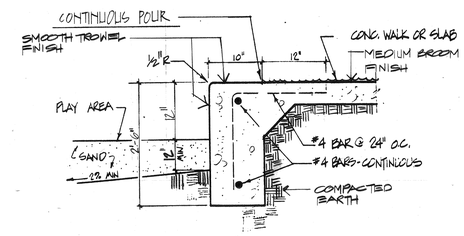

F PLAY AREA CURB

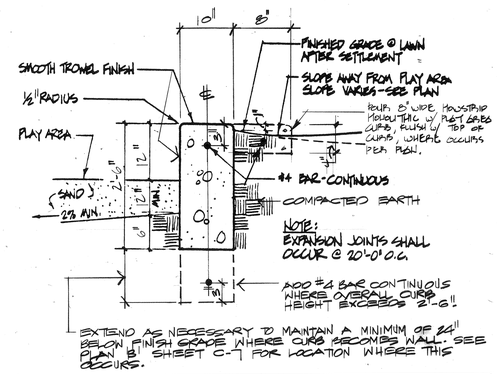

EXTEND AS NECESSARY TO MAINTAIN A MINIMUM OF 22" BELOW FINISH GRADE WHERE CURB BECOMES WALL. SEE PLAN & SHEET C-1 FOR LOCATION WHERE THIS OCCURS.

G PLAY AREA CURB

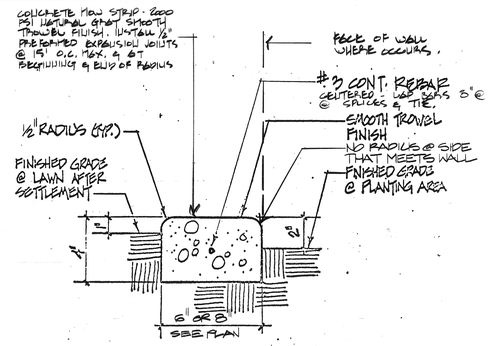

H CONCRETE MOW STRIP

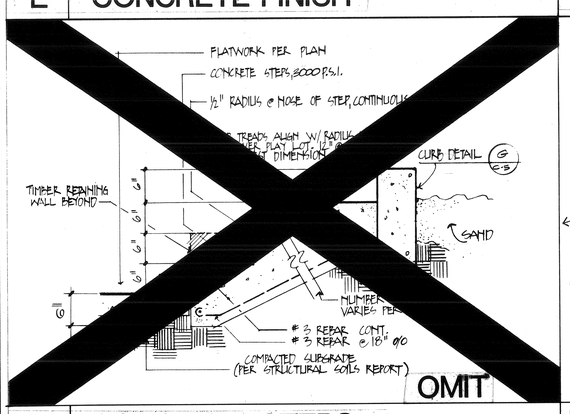

I CONCRETE STEPS

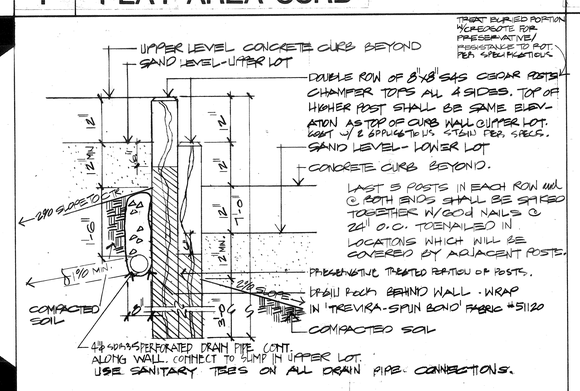

J PLAY AREA POST WALL

K WALL PLANTING POCKETS

INSTALL PER SPECIFICATIONS & MANUFACTURER'S DIRECTIONS

L EXERCISE STATION

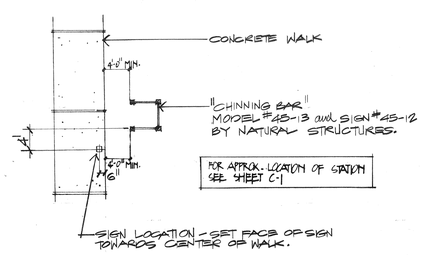

INSTALL PER SPECIFICATIONS & MANUFACTURER'S DIRECTIONS

M EXERCISE STATION

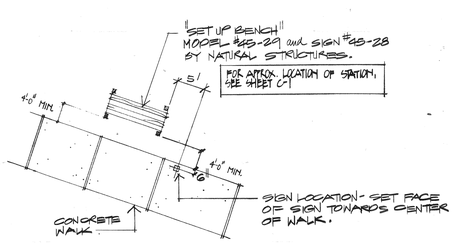

INSTALL PER SPECIFICATIONS & MANUFACTURER'S DIRECTIONS

N EXERCISE STATION

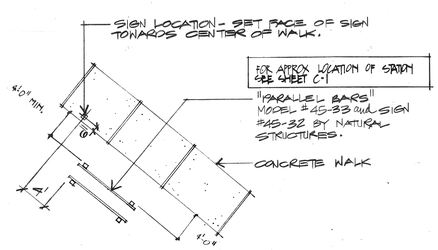

INSTALL PER SPECIFICATIONS & MANUFACTURER'S DIRECTIONS

O EXERCISE STATION

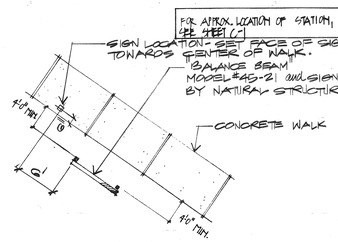

INSTALL PER SPECIFICATIONS & MANUFACTURER'S DIRECTIONS

P EXERCISE STATION

REGISTERED LANDSCAPE ARCHITECT
JOHN G. ELLIOTT 2017
STATE OF CALIFORNIA

elliott/maloney
landscape architecture
planning
3903 Brockton Avenue, Suite 2, Riverside, California 92501 / (714) 369-0700

SHEET DESCRIPTION: CONSTRUCTION DETAILS

PROJECT: MOUNTAIN VIEW & NICHOLS PARKS

REVISIONS	
	DATE 21 MAY 86
	JOB 85047M
	DRAWN BY RJ/MS
	CHECKED BY ME

SCALE: N/A

NORTH

SHEET: C-5 OF 28

ONE #P0502 AND R002

BISHOP GRAPHICS: ACCUPRESS
REORDER NO. A3099

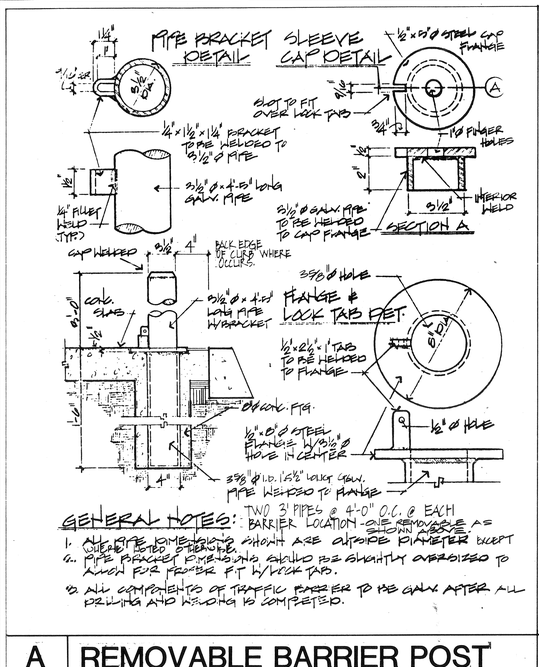

GENERAL NOTES: TWO 3' PIPES @ 4'-0" O.C. @ EACH BARRIER LOCATION - ONE REMOVABLE AS SHOWN ABOVE

1. ALL PIPE DIMENSIONS SHOWN ARE OUTSIDE DIAMETER EXCEPT WHERE NOTED OTHERWISE.
2. PIPE BRACKET DIMENSIONS SHOULD BE SLIGHTLY OVERSIZED TO ALLOW FOR PROPER FIT W/LOCK TABS.
3. ALL COMPONENTS OF TRAFFIC BARRIER TO BE GALV. AFTER ALL DRILLING AND WELDING IS COMPLETED.

A REMOVABLE BARRIER POST

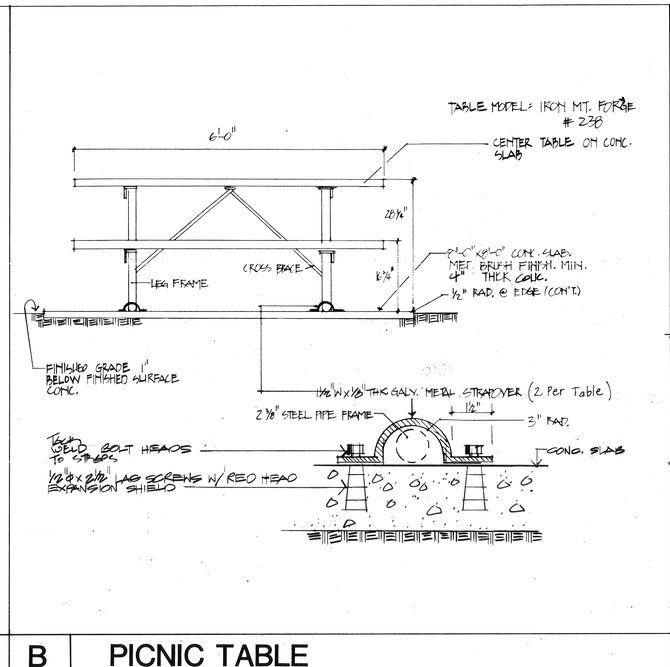

B PICNIC TABLE

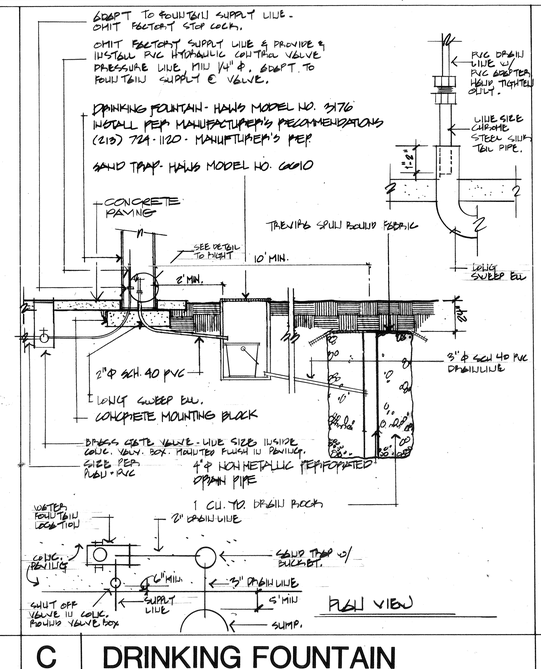

C DRINKING FOUNTAIN

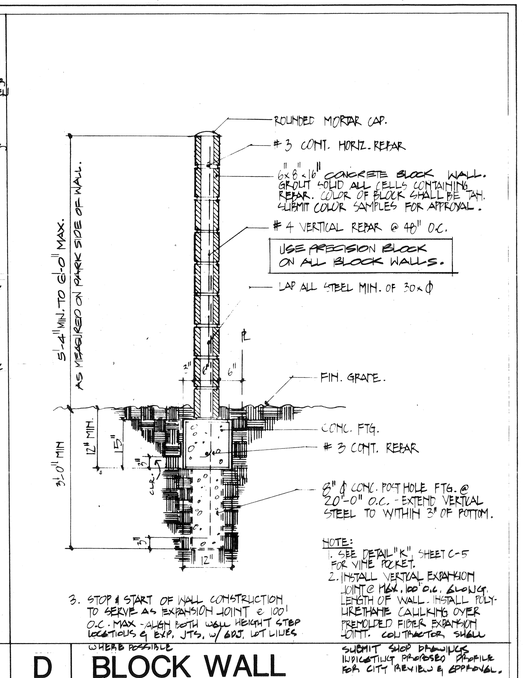

3. STOP & START OF WALL CONSTRUCTION TO SERVE AS EXPANSION JOINT @ 100' O.C. MAX - ALIGN BOTH WALL HEIGHT & STEP LOCATIONS @ EXP. JTS. W/ EXP. JT. LINES WHERE POSSIBLE

NOTE:
1. SEE DETAIL "K", SHEET C-5 FOR VINE POCKET.
2. INSTALL VERTICAL EXPANSION JOINT @ MAX. 100' O.C. ALONG LENGTH OF WALL. INSTALL POLYURETHANE CAULKING OVER PREMOLDED FIBER EXPANSION JOINT. CONTRACTOR SHALL SUBMIT SHOP DRAWINGS INDICATING PROPOSED PROFILE FOR CITY REVIEW & APPROVAL.

D BLOCK WALL

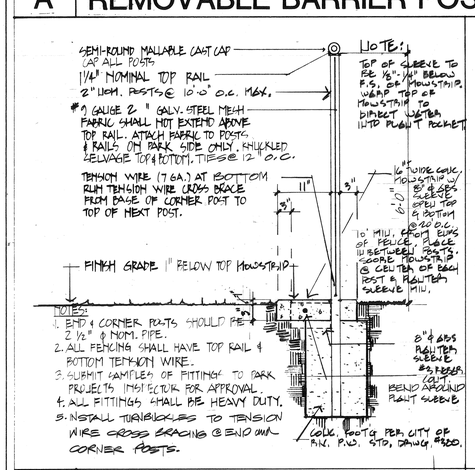

NOTES:
1. END & CORNER POSTS SHOULD BE 2 1/2" Ø NOM. PIPE.
2. ALL FENCING SHALL HAVE TOP RAIL & BOTTOM TENSION WIRE.
3. SUBMIT SAMPLES OF FITTINGS TO PARK PROJECT INSPECTOR FOR APPROVAL.
4. ALL FITTINGS SHALL BE HEAVY DUTY.
5. INSTALL TURNBUCKLES TO TENSION WIRES CROSS BRACING @ END OVER CORNER POSTS.

E CHAIN LINK FENCE

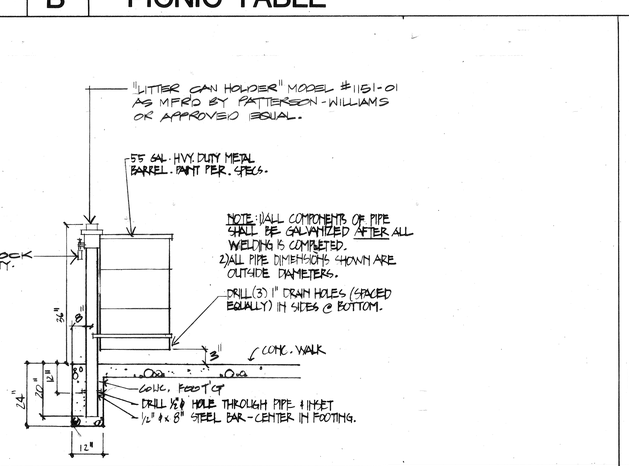

F TRASH RECEPTACLE

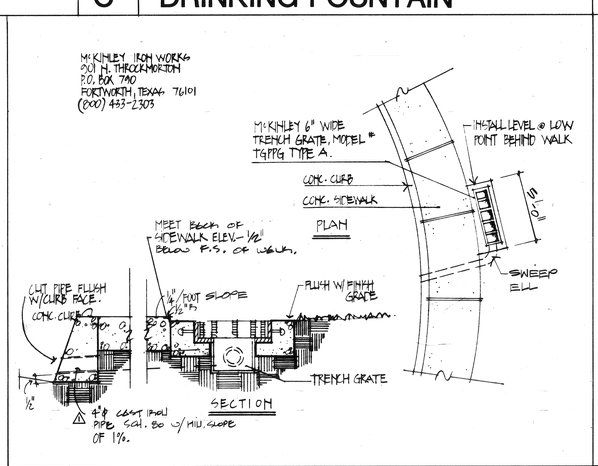

G CHANNEL DRAIN

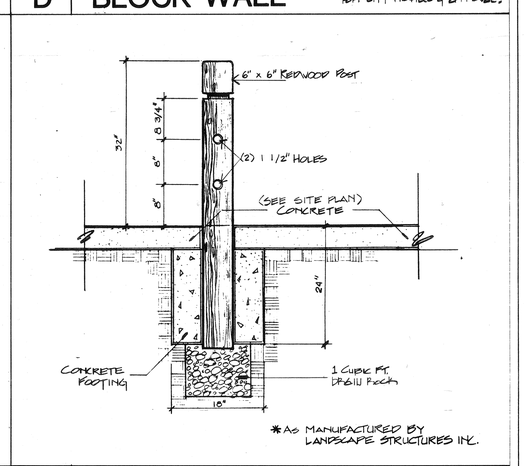

H BIKE RACK

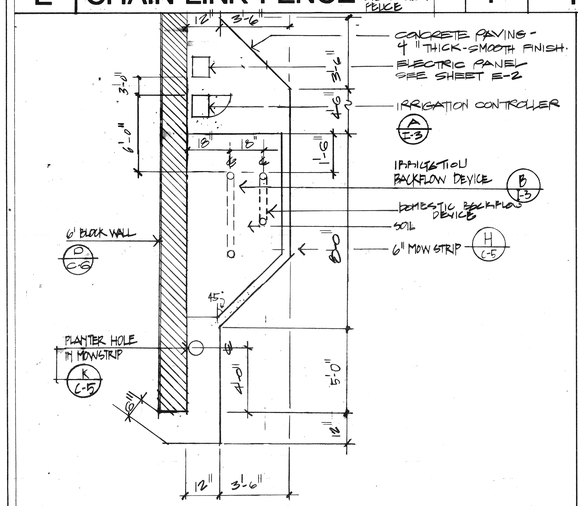

I AREA FOR BACKFLOW

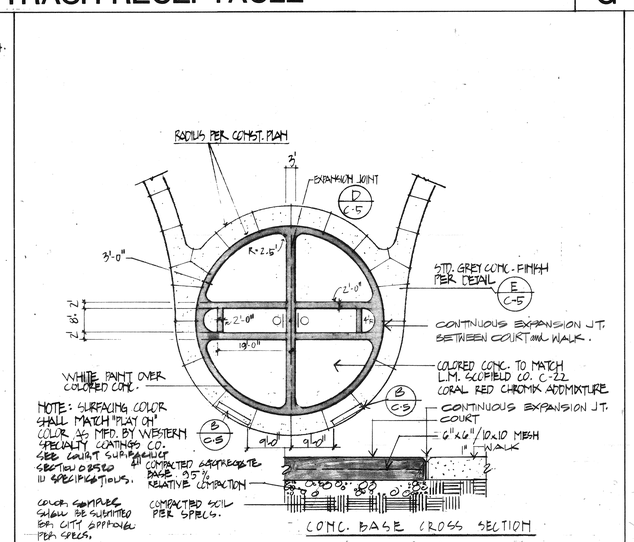

J BASKETBALL COURT

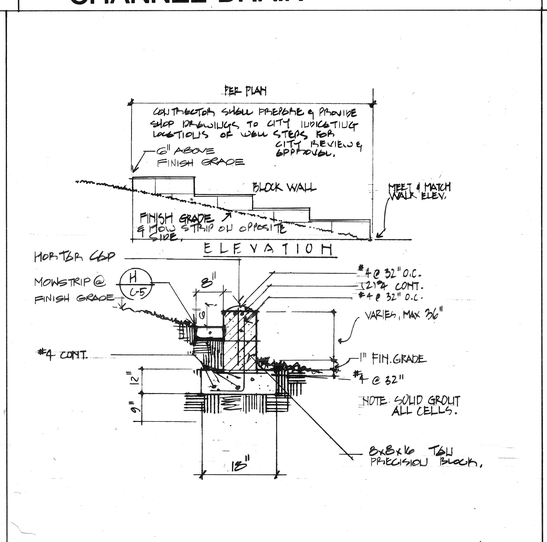

K RETAINING WALL

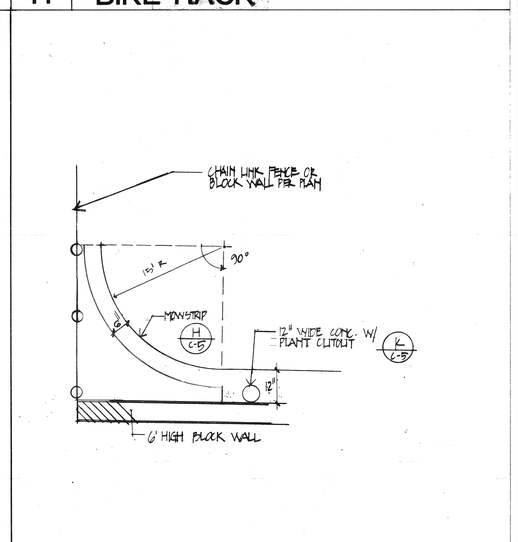

L MOWSTRIP DETAIL @ WALL

elliott/maloney
landscape architecture planning
3903 Brockton Avenue, Suite 2 Riverside, California 92501 (714) 369-0700

CONSTRUCTION DETAILS

MOUNTAIN VIEW & NICHOLS PARKS

REVISIONS	DATE 22 MAY 86
△ 6-30-88 M.E.	JOB 85047M
	DRAWN BY MJS
	CHECKED BY

SCALE:

NORTH

SHEET: C-6 OF: 28

DWG #P0512 and #P0502

BISHOP GRAPHICS: ACCUPRESS REORDER NO. A30099

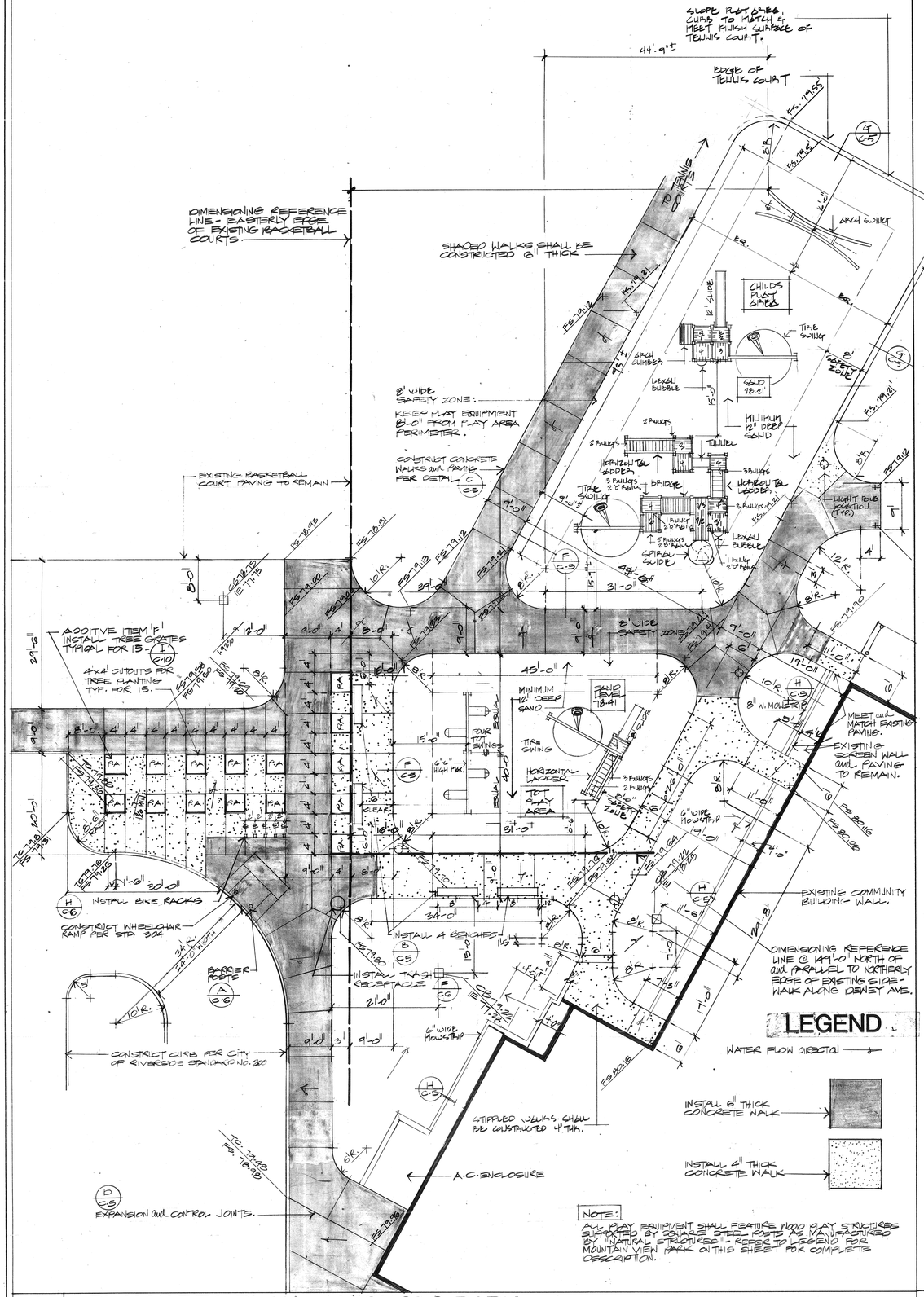

A | PLAY AREA PLAN NICHOLS PARK SCALE 1":10'-0"

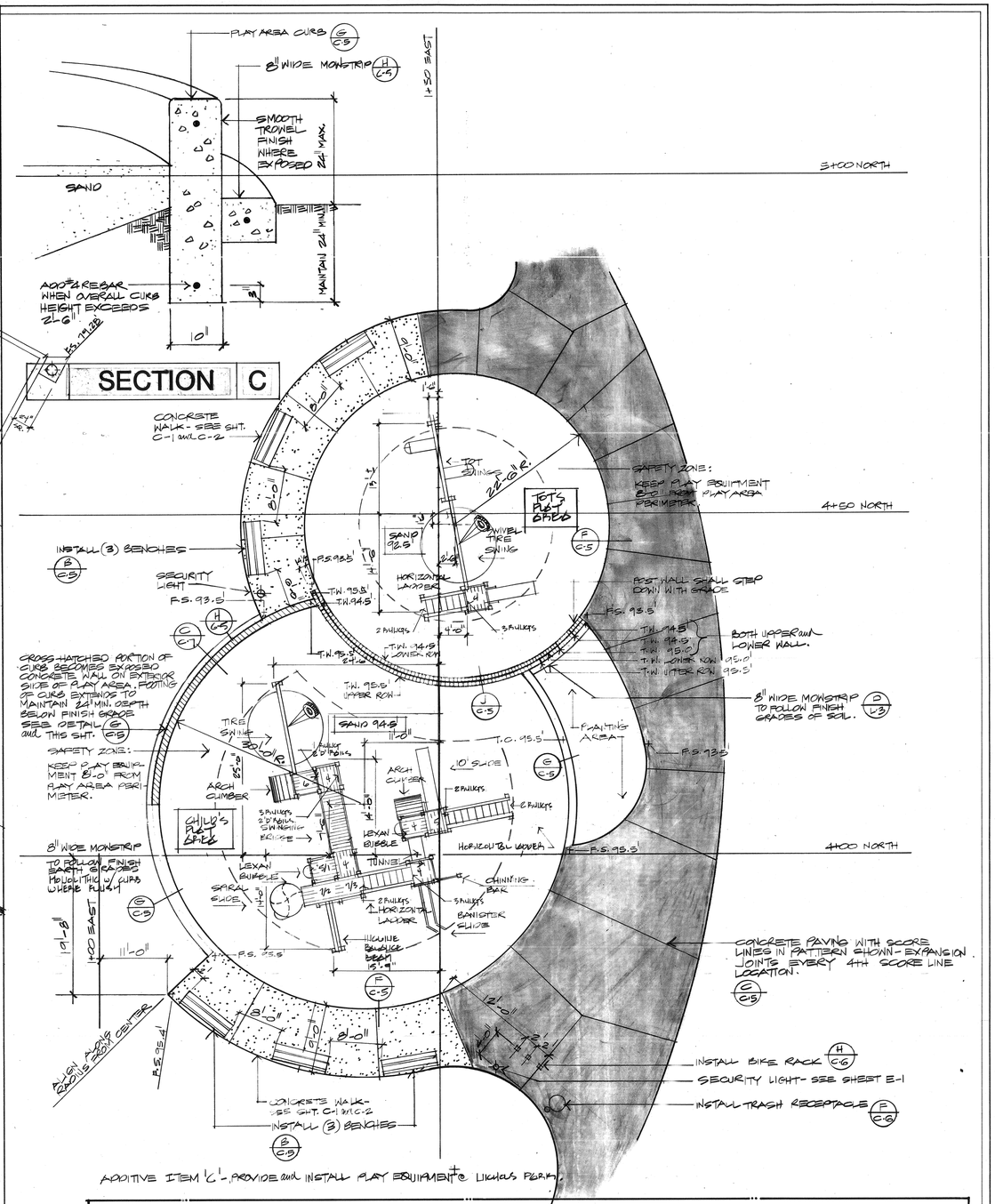

ALL PLAY EQUIPMENT SHALL FEATURE WOOD PLAY STRUCTURES SUPPORTED BY SQUARE STEEL POSTS AS MANUFACTURED BY: "NATURAL STRUCTURES" P.O. BOX 727, SHERWOOD, OREGON 97140 TELEPHONE (503) 625-2566

AVAILABLE THRU: NATURAL STRUCTURES P.O. BOX 727, SHERWOOD, OREGON 97140 TELEPHONE (503) 625-2566 ATTENTION: JODIE HALLSOTTER

NOTE: ALL EQUIPMENT, SET BLOCKS & INSTALLATION SHALL MEET OR EXCEED MINIMUM FEDERAL SAFETY STANDARDS.

TOT PLAY AREA

NATURAL STRUCTURES
NICHOLS PARK:
PLAY STRUCTURE #301-13M
TOT SWINGS #555-106M
MT. VIEW PARK:
PLAY STRUCTURE #301-13M

CHILD'S PLAY AREA

NATURAL STRUCTURES
NICHOLS PARK:
ARCH SWINGS #229-81
PLAY STRUCTURE #340-1070
PLAY STRUCTURE #360-1415
MT. VIEW PARK:
PLAY STRUCTURE #360-21M

INSTALL PER MANUFACTURER'S SPECIFICATIONS. LANDSCAPE ARCHITECT SHALL APPROVE SITING AND ORIENTATION.

ALL PLAY EQUIPMENT STRUCTURES SHALL BE INSTALLED WITH REDWOOD DECKS & STEEL RAIL SIDINGS (COLOR BLUE) & VERTICAL STEEL WALLS (COLOR BLUE) CONTRACTOR SHALL SUBMIT COLOR SAMPLES FOR CITY APPROVAL. SPIRAL SLIDES SHALL BE POLYETHYLENE CONSTRUCTION.

B | PLAY AREA PLAN MOUNTAIN VIEW SCALE 1/8":1'-0"

REGISTERED LANDSCAPE ARCHITECT MICHAEL E. ELLIOTT CSLA 2000 STATE OF CALIFORNIA

elliott/maloney
landscape architecture
planning
3903 Brockton Avenue, Suite 2, Riverside, California 92501, (714) 369-0700

SHEET DESCRIPTION: CONSTRUCTION PLAN

PROJECT: MOUNTAIN VIEW & NICHOLS PARKS

REVISIONS	DATE 23 MAY 86
	JOB 85047M
	DRAWN BY: RJ
	CHECKED BY: ME

SCALE: AS NOTED

NORTH

SHEET: C-7 OF 28

DWG # 10502 and # 10512

BISHOP GRAPHICS / ACCUPRESS REORDER NO. A35099

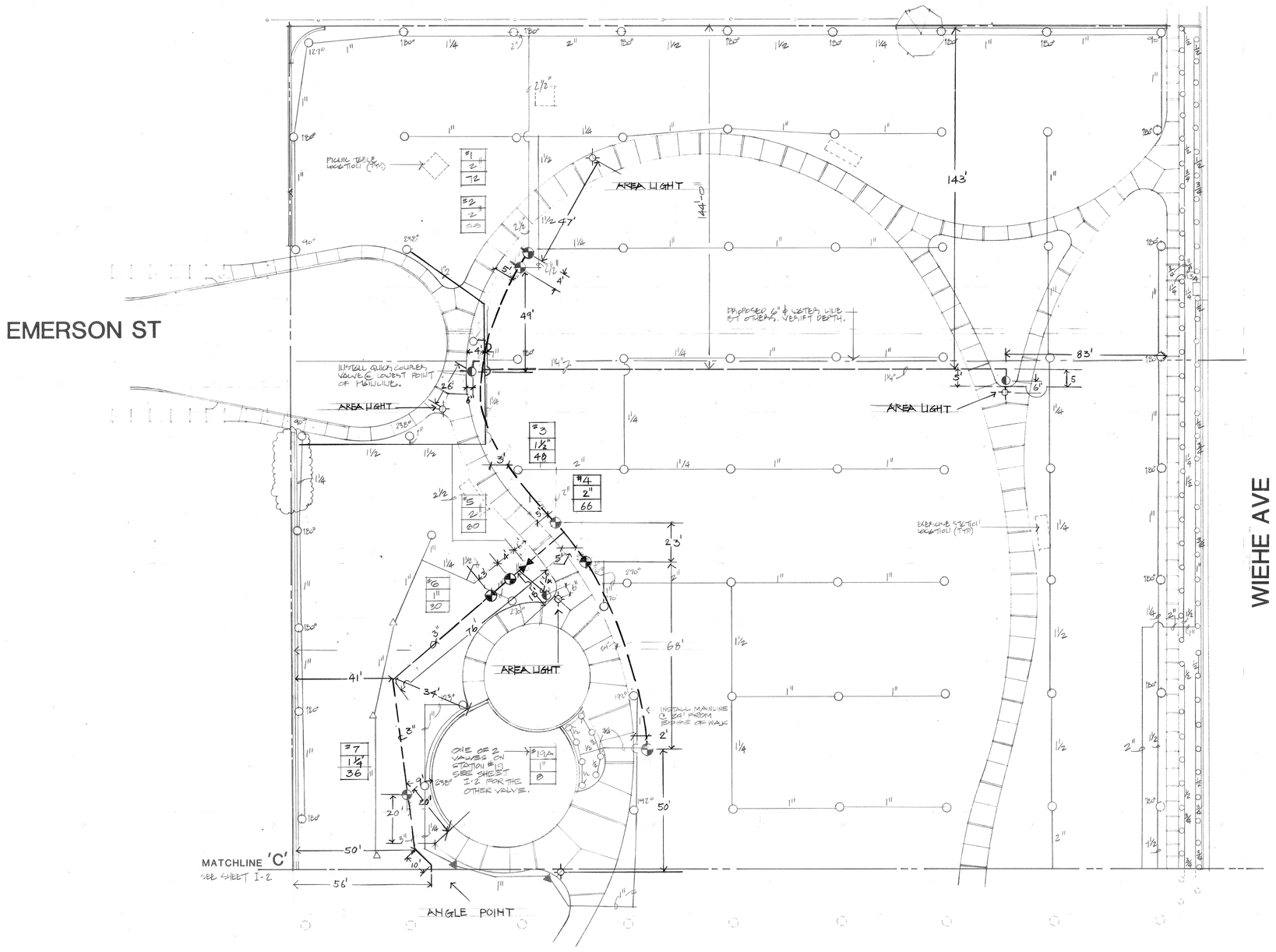

VALVE LEGEND

#1	STATION NUMBER
1½	VALVE SIZE
52	GPM

FOR IRRIGATION LEGEND SEE SHEET I-4

48 HOURS BEFORE YOU DIG CALL
Underground Service Alert
1-800-422-4133

elliott/ maloney
landscape architecture planning
3903 Brockton Avenue, Suite 2, Riverside, California 92501, (714) 369-0700

REGISTERED LANDSCAPE ARCHITECT
MICHAEL G. ELLIOTT
STATE OF CALIFORNIA

SHEET DESCRIPTION:
IRRIGATION PLAN

PROJECT:
MOUNTAIN VIEW PARK

REVISIONS:
DATE: 9 MAY 86
JOB: 85047M
DRAWN BY: RJ
CHECKED BY: ME

SCALE: 1" : 20'-0"

NORTH

SHEET:
I-1
OF: 28

OWG#P0512

BISHOP GRAPHICS/ACCUPRESS REORDER NO. A35099

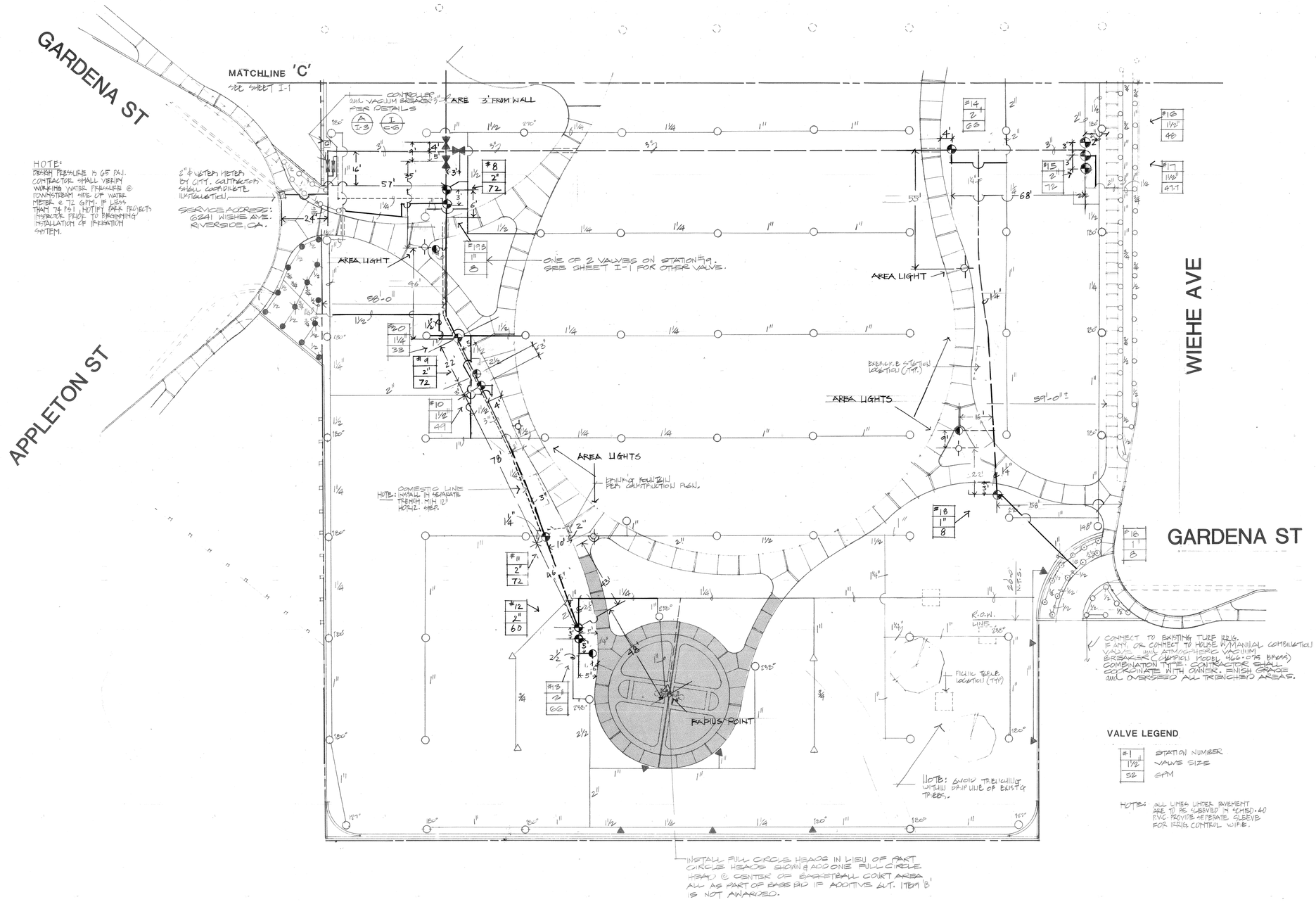

elliott/ maloney
landscape architecture planning
3903 Brockton Avenue, Suite 2, Riverside, California 92501, (714) 369-0700

REGISTERED LANDSCAPE ARCHITECT MICHAEL G. ELLIOTT 2011 STATE OF CALIFORNIA

SHEET DESCRIPTION:
IRRIGATION PLAN

PROJECT:
MOUNTAIN VIEW PARK

REVISIONS:	
	DATE: 22 MAY 86
	JOB 85047M
	DRAWN BY: RJ
	CHECKED BY: ME

SCALE: 1" : 20'-0"

NORTH

SHEET: I-2 OF: 28

48 HOURS BEFORE YOU DIG CALL
Underground Service Alert
1-800-422-4133

DWG # P0512

BISHOP GRAPHICS/ACCUPRESS REORDER NO. A35099

DRAWING NUMBER

DRAWING NUMBER

DRAWING NUMBER

DRAWING NUMBER

DRAWING NUMBER

DRAWING NUMBER

DRAWING NUMBER N1-25

PLAN HOLD CORPORATION • IRVINE, CALIFORNIA
REORDER BY NUMBER 075AR
POSITION EDGE OF PRINT ON THIS LINE

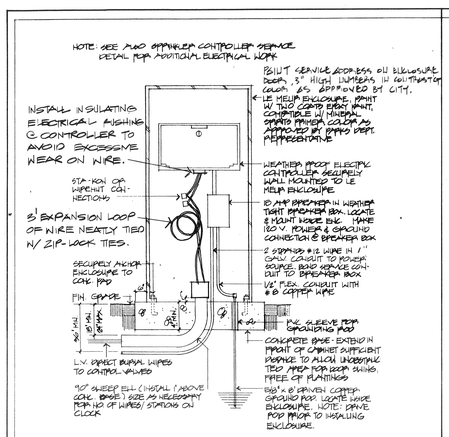

A CONTROLLER

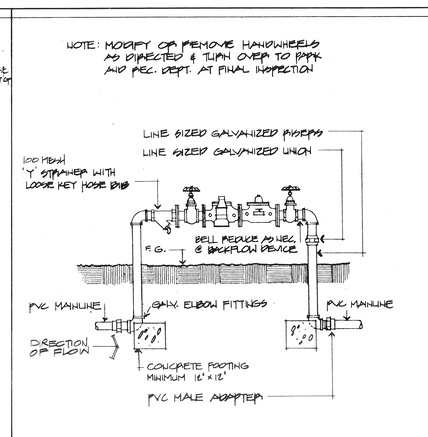

B BACKFLOW PREVENTER

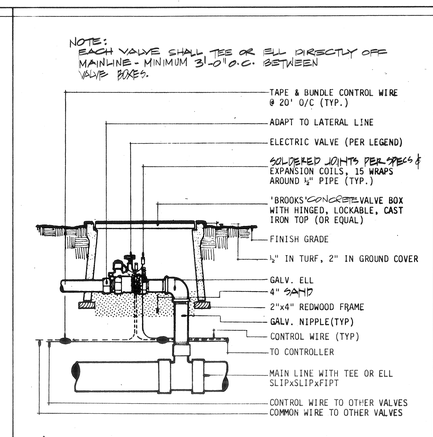

C CONTROL VALVE

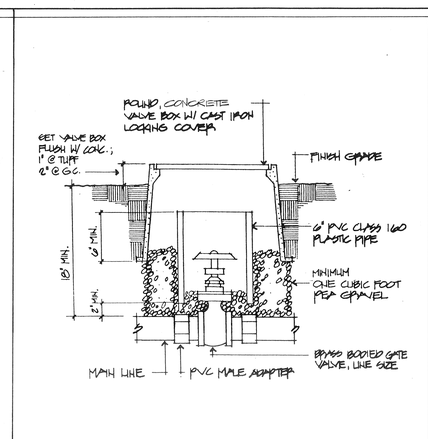

D GATE VALVE

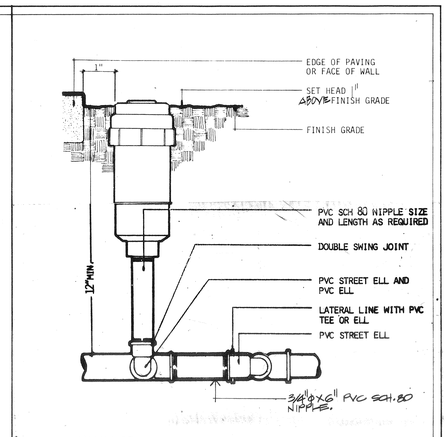

E TURF HEAD

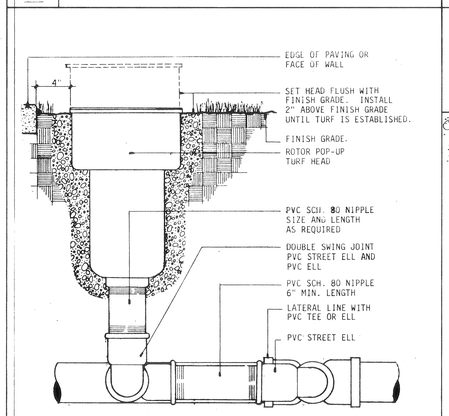

F TURF ROTOR

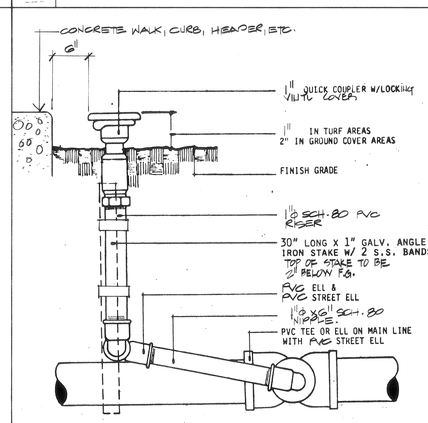

G QUICK COUPLER

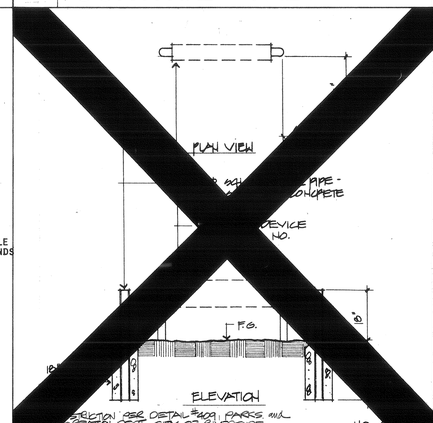

H BARRIER POSTS OMIT

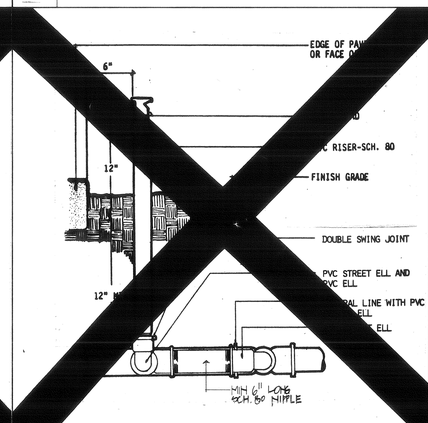

I SHRUB HEAD OMIT

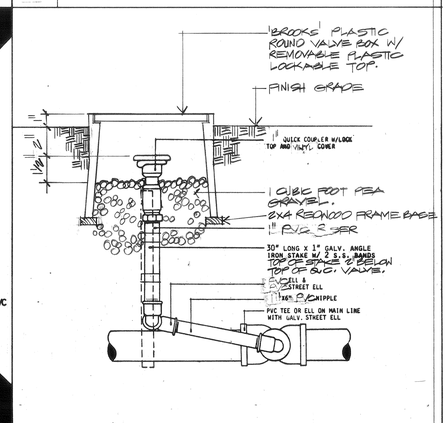

J Q.C. IN VALVE BOX

Symbol	Model	PSI	Radius	Pattern 360°	270°	180°	90°	127°	173°	142°	238°	Detail	Remarks
○	TORO 640 SERIES CHECKMATIC	40	47'	6.0GPM	6.0	6.0	6.0	6.0	6.0	6.0	6.0	F	NOZZLE #40
△	TORO 5600C PC	40	47'	6.1GPM								F	6.0 NOZZLE
▲	TORO 5600C PC	40	47'		6.1GPM	—	—	—	—	—	»	F	6.0 NOZZLE
◇ ◇ ○ ○ ○	TORO 570-HP 12'F, 270°, H, 120°, Q	20	10'	1.7	1.3	.9	.4	100° .6				E	4" POP-UP LOW GPM NOZZLE
⊙ ⊙	TORO 570-HP 12' Q & 12'H	20	10'			.9	.4					E	12" POP-UP " " "
◆ ◆ ● ● ●	TORO 570-AP 15' F, 270°, H, 120°, Q	30	15'	4.0	3.0	2.0	1.0	100° 1.4				E	4" POP-UP STANDARD "
•	TORO 570-AP BUBBLER	5	4'	1.0								E	4" POP-UP RISER
◆ ◆	TORO 570HP 15' H, Q	30	15'			2.0	1.0					E	12" POP-UP STANDARD NOZZLE
M	2" WATER METER												
	2 1/2" FEBCO #825 REDUCED PRESSURE BACKFLOW 1 1/2 & 2" WILKINS "Y" STR. 100 SERIES, MESH STRAINER BRASS BODY											B	IRRIGATION BACKFLOW
C	GRISWOLD #2400 24 STATION CONTROLLER											A	SEE NOTE NO. 1 THIS SHEET
	GATE VALVE (LINE SIZE)											D	
	GRISWOLD #2000 SERIES REMOTE CONTROL VALVE - SIZE PER PLAN											C	GLOBE TYPE VALVE
	FEBCO #44 DLVC QUICK COUPLER VALVE											G	
	CHAMPION #B-402 LK LOOSE KEY HOSE BIBB - 3/4" HOSE AND 1" PIPE CONNECTIONS											K	PROVIDE 1 KEY PER VALVE
	1" FEBCO #825Y REDUCED PRESSURE BACKFLOW W/ 1" WILKINS "Y" STR. 100 SERIES, MESH STRAINER BRASS BODY											B	DOMESTIC WATER BACKFLOW
	EXISTING MAINLINE												
	CLASS 200 PVC LATERAL LINE												
	CLASS 315 PVC OR CLASS 200 RUBBER GASKET PIPE (PIPE LESS THAN 1 1/2" Ø USE SCH. 40 PVC)												
	CLASS 315 PVC DOMESTIC MAIN LINE												
#1	STATION NUMBER - VALVE LABEL LEGEND												
1 1/2"	VALVE SIZE												
50	TOTAL GPM ON SYSTEM												
•	EXISTING IRRIGATION SPRINKLERS.												SEE NOTE NO. 2 THIS SHEET.

IRRIGATION LEGEND

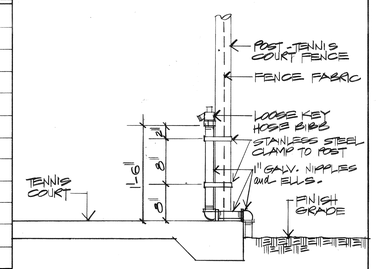

K HOSE BIBB

1 ONE CONTROLLER @ MOUNTAINVIEW PARK and 2 @ NICHOLS PARK.

2 AT NICHOLS PARK CONTRACTOR SHALL SALVAGE ALL EXIST'G VALVE BOXES, REMOTE CONTROL VALVES, QUICK COUPLER VALVES, MANUAL VALVES, CONTROLLERS, & SPRINKLERS IN ALL AREAS TO RECEIVE NEW IRRIGATION. THE FOLLOWING QUANTITIES HAVE BEEN ESTIMATED FOR THE CITY, CONTRACTOR MAY USE THESE QUANTITIES BUT SHALL BE RESPONSIBLE FOR VERIFYING SAME IN THE FIELD & WILL BE REQUIRED TO TURN OVER THESE APPROX. QTY'S

MATERIAL	QUANTITY (APPROXIMATE) BASE BID	COMMUNITY CTR. BUTTA	ADDITIVE 'G'	ADDITIVE 'H'
SPRINKLERS	280	12	40	59
REMOTE CONTROL VALVES	27	2	7	7
QUICK COUPLER VALVES	10	1	3	—
MANUAL VALVES	5	—	—	—
VALVE BOXES	27	2	7	7
CONTROLLERS	2		—	1

EXIST'G PIPING & WIRING SHALL BE SALVAGED.

elliott/ maloney
landscape architecture planning
3903 Brockton Avenue, Suite 2, Riverside, California 92501 | (714) 369-0700

REGISTERED LANDSCAPE ARCHITECT
STEPHEN E. ELLIOTT 2015
STATE OF CALIFORNIA

SHEET DESCRIPTION: Irrigation Details

PROJECT: MOUNTAIN VIEW & NICHOLS PARKS

REVISIONS	DATE 22 MAY 86
	JOB 85047M
	DRAWN BY MS/RJ
	CHECKED BY MS

SCALE: N/A

NORTH

SHEET: I-4
OF: 28

DWG # P0512 DWG # P0502

BISHOP GRAPHICS: ACCUPRESS
REORDER NO. A3009

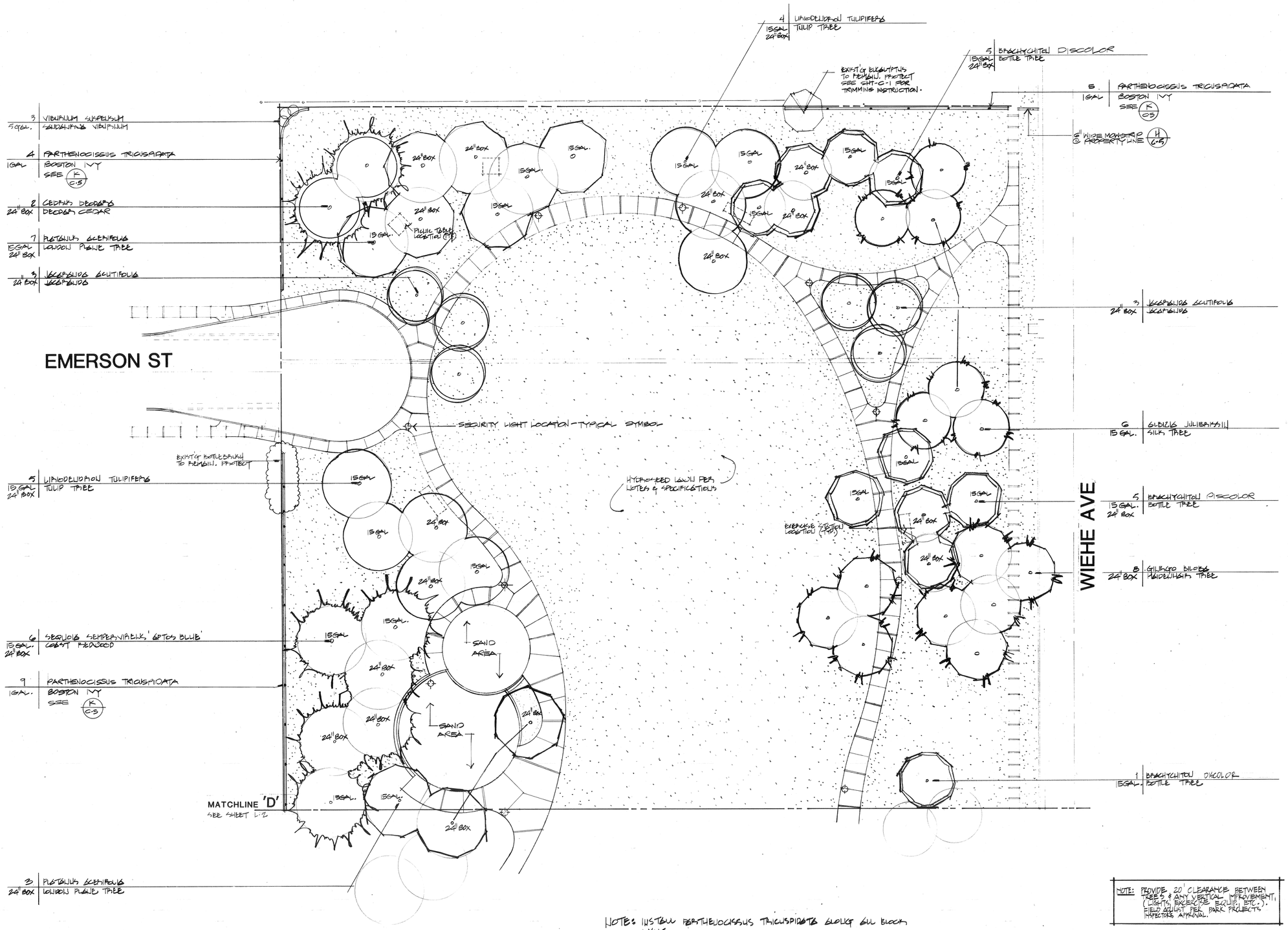

NOTE: INSTALL PARTHENOCISSUS TRICUSPIDATA ALONG ALL BLOCK WALLS.

INSTALL GALSEMIUM SEMPERVIRENS IN PLACE OF PARTHENOCISSUS TRICUSPIDATA WHERE CHAIN LINK FENCE IS INSTALLED.

NOTE: PROVIDE 20' CLEARANCE BETWEEN TREES & ANY VERTICAL IMPROVEMENT, (LIGHTS, EXCERCISE EQUIP., ETC.). FIELD ADJUST PER PARK PROJECTS INSPECTORS APPROVAL.

FOR PLANT LEGEND SEE SHEET L-4

48 HOURS BEFORE YOU DIG CALL
Underground Service Alert
1-800-422-4133

elliott/maloney
landscape architecture
planning
3903 Brockton Avenue, Suite 2, Riverside, California 92501, (714) 369-0700

REGISTERED LANDSCAPE ARCHITECT
MICHAEL G. ELLIOTT, 2034
STATE OF CALIFORNIA

SHEET DESCRIPTION:
PLANTING PLAN

PROJECT:
MOUNTAIN VIEW PARK

REVISIONS:

DATE: 21 MAY 86
JOB: 8504ZM
DRAWN BY: RJ
CHECKED BY: ME

SCALE: 1" : 20'-0"

NORTH

SHEET:
L-1
OF: 28

DWG #P0512

BISHOP GRAPHICS/ACCUPRESS
REORDER NO. A35099

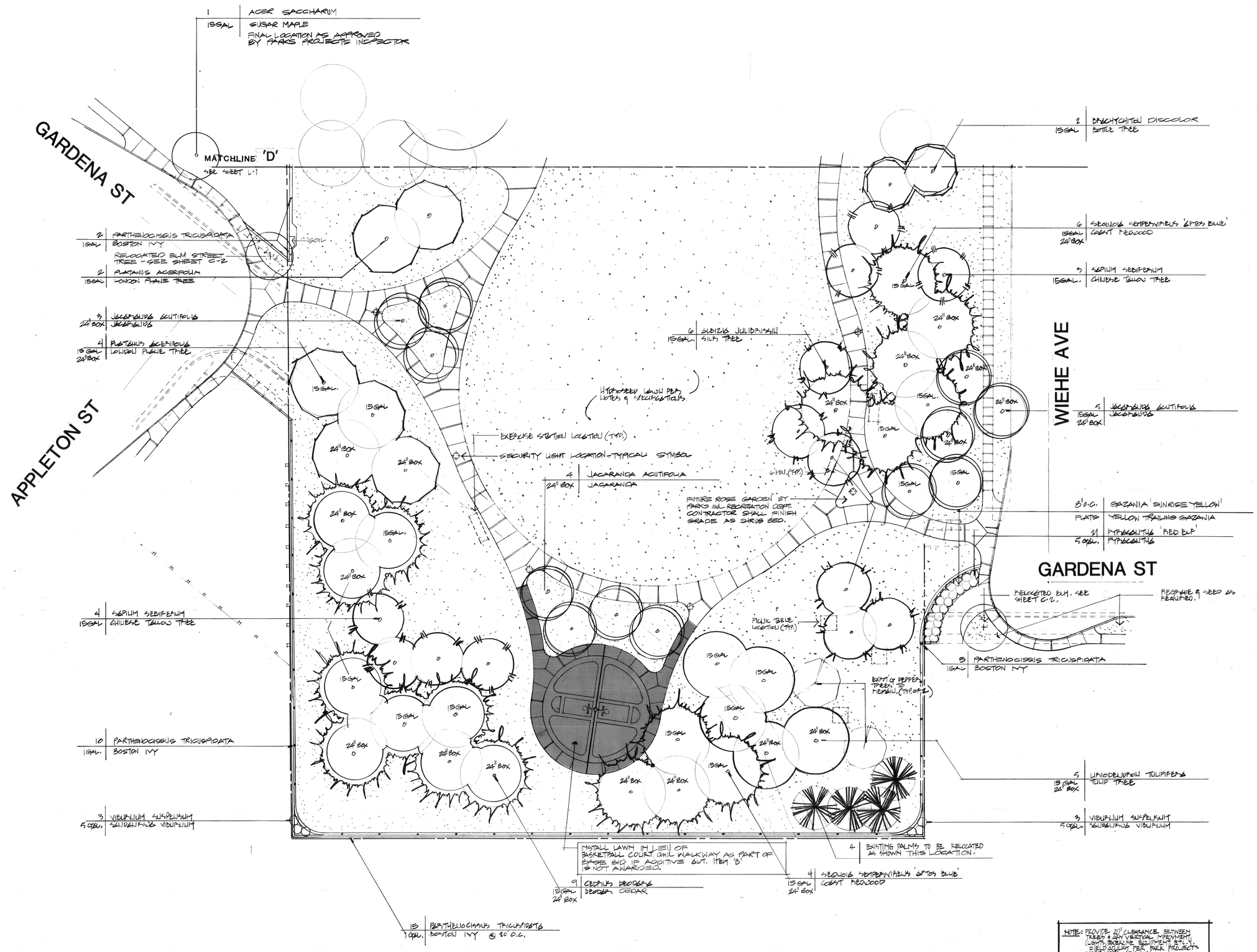

NOTE: PROVIDE 20' CLEARANCE BETWEEN TREES & ANY VERTICAL IMPROVEMENT (LIGHTS, EXERCISE EQUIPMENT, ETC.). FIELD ADJUST PER PARK PROJECTS INSPECTORS APPROVAL

NOTE: INSTALL PARTHENOCISSUS TRICUSPIDATA ALONG ALL BLOCK WALLS.

INSTALL GELSEMIUM SEMPERVIRENS IN PLACE OF PARTHENOCISSUS TRICUSPIDATA WHERE CHAIN LINK FENCE IS INSTALLED.

48 HOURS BEFORE YOU DIG CALL
Underground Service Alert
1-800-422-4133

BISHOP GRAPHICS/ACCUPRESS REORDER NO. A35099

REGISTERED LANDSCAPE ARCHITECT MICHAEL G. ELLIOTT 2037 STATE OF CALIFORNIA

elliott/maloney
landscape architecture planning
3903 Brockton Avenue, Suite 2, Riverside, California 92501, (714) 369-0700

SHEET DESCRIPTION:
PLANTING PLAN

PROJECT:
MOUNTAIN VIEW PARK

REVISIONS:

DATE: 22 MAY 86
JOB 85047M
DRAWN BY: RJ/ME
CHECKED BY: ME

SCALE: 1" : 20'-0"

NORTH

SHEET:
L-2
OF: 28

DWG # P0512

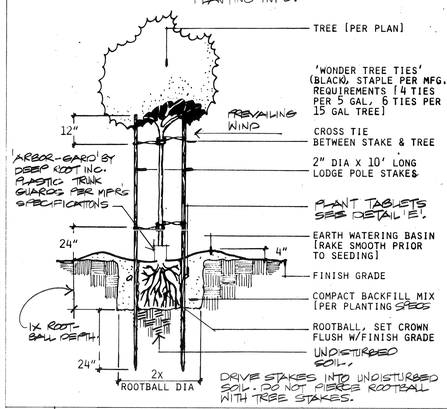

A TREE PLANTING

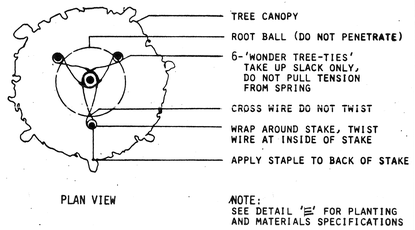

B TRIPLE STAKE

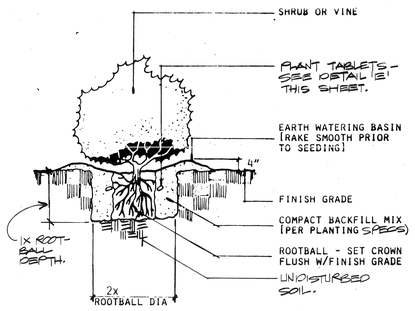

C SHRUB PLANTING

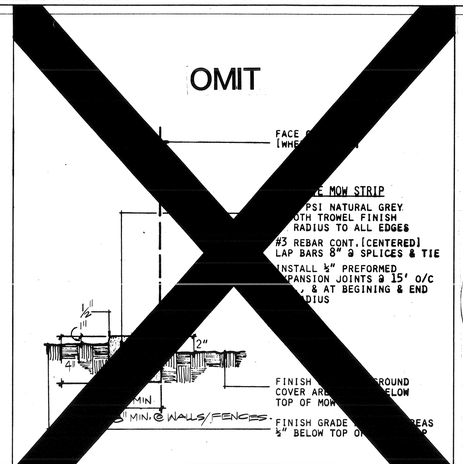

MOWSTRIP

GENERAL PLANTING NOTES

1) Contact the Park Project Inspector at 787-7223 48 hours prior to installing any plant material.

2) Trees planted in turf areas shall be maintained with a minimum 12" radius around tree free from turf throughout the maintenance period.

3) Watering basins may be removed after the maintenance period.

4) For staking information as applicable, refer to standard staking detail.

5) For guying information as applicable, refer to standard guying detail.

6) For specification information, refer to City of Riverside Park and Recreation Department Standard Specifications sections 02420/02421.

7) Provide Fertilizer Tablets as follows:

1 gallon plant	2 tablets
5 gallon plant	3 tablets
15 gallon plant	5 tablets
24" box plant	8 tablets

CITY OF RIVERSIDE PARKS AND RECREATION DEPT. STANDARD DETAIL #1001.

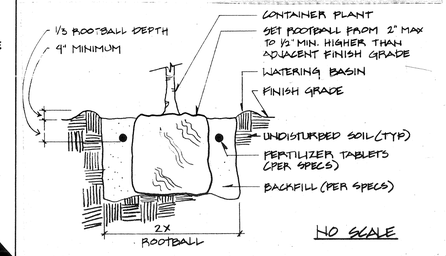

E PLANTING DETAIL

Botanical Name	Size	Detail	Remarks
1 ALBIZIA JULIBRISSIN	1BS/24"BOX	B	MULTI-TRUNK. TRIPLE STAKE
1,2 BRACHYCHITON DIGCOLOR	1BS/24"BOX	A	SINGLE TRUNK
1 CEDRUS DEODARA	24"BOX	A	
1 GAZANIA 'SUNRISE YELLOW'	FLATS	—	ROOTED CUTTINGS IN FLATS
1,2 GINKGO BILOBA	24"BOX	A	
1,2 JACARANDA ACUTIFOLIA	3S/24"BOX	B	MULTI-TRUNK. TRIPLE STAKE
1,2 LIRIODENDRON TULIPIFERA	1BS/24"BOX	A	SINGLE TRUNK
2 LAGERSTROEMIA INDICA	1BS/24"BOX	A	SINGLE TRUNK-MATCHING SIZE AND SHAPE
1,2 PARTHENOCISSUS TRICUSPIDATA	1GAL.	C	SEE ALSO DETAIL 4 SHEET L-5
1,2 PLATANUS ACERIFOLIA	1BS/24"BOX	A	SINGLE TRUNK
1,2 SAPIUM SEBIFERIUM	15GAL.	A	SINGLE TRUNK
1 SEQUOIA SEMPERVIRENS 'APTOS BLUE'	1BS/24"BOX	A	SINGLE TRUNK
1 VIBURNUM SUSPENSUM	5GAL	C	
1 PITTOSPORUM 'RED ELF'	5GAL.	C	
1 ACER SACCHARUM	15GAL.	A	
2 MAGNOLIA GRANDIFLORA	1BS/24"BOX	A	
2 PINUS CANARIENSIS	1BS/24"BOX	A	
2 PINUS PINEA	1BS/24"BOX	A	
2 RAPHIOLEPIS 'BILL EVANS'	5GAL	C	
1 GELSEMIUM SEMPERVIRENS	1GAL.	C	SEE ALSO DETAIL 4 SHEET L-5
HYDROSEED TURF			PER SPECIFICATIONS
1 MOUNTAIN VIEW PARK			
2 NICHOLS PARK			

PLANTING LEGEND

elliott/maloney
landscape architecture
planning
3903 Brockton Avenue, Suite 2, Riverside, California 92501 | (714) 369-0700

REGISTERED LANDSCAPE ARCHITECT MICHAEL G. ELLIOTT 2396 STATE OF CALIFORNIA

SHEET DESCRIPTION: Planting Details

PROJECT: MOUNTAIN VIEW & NICHOLS PARKS

REVISIONS	
	DATE 22 MAY 80
	JOB N 85047M
	DRAWN BY RJ/MS
	CHECKED BY MS

SCALE: N/A

NORTH

SHEET: L-4 OF 28

ONG#P0512 ONL#P0302

GRAPHIC GRAPHICS / ACCUPRESS
BINDER NO. A35099

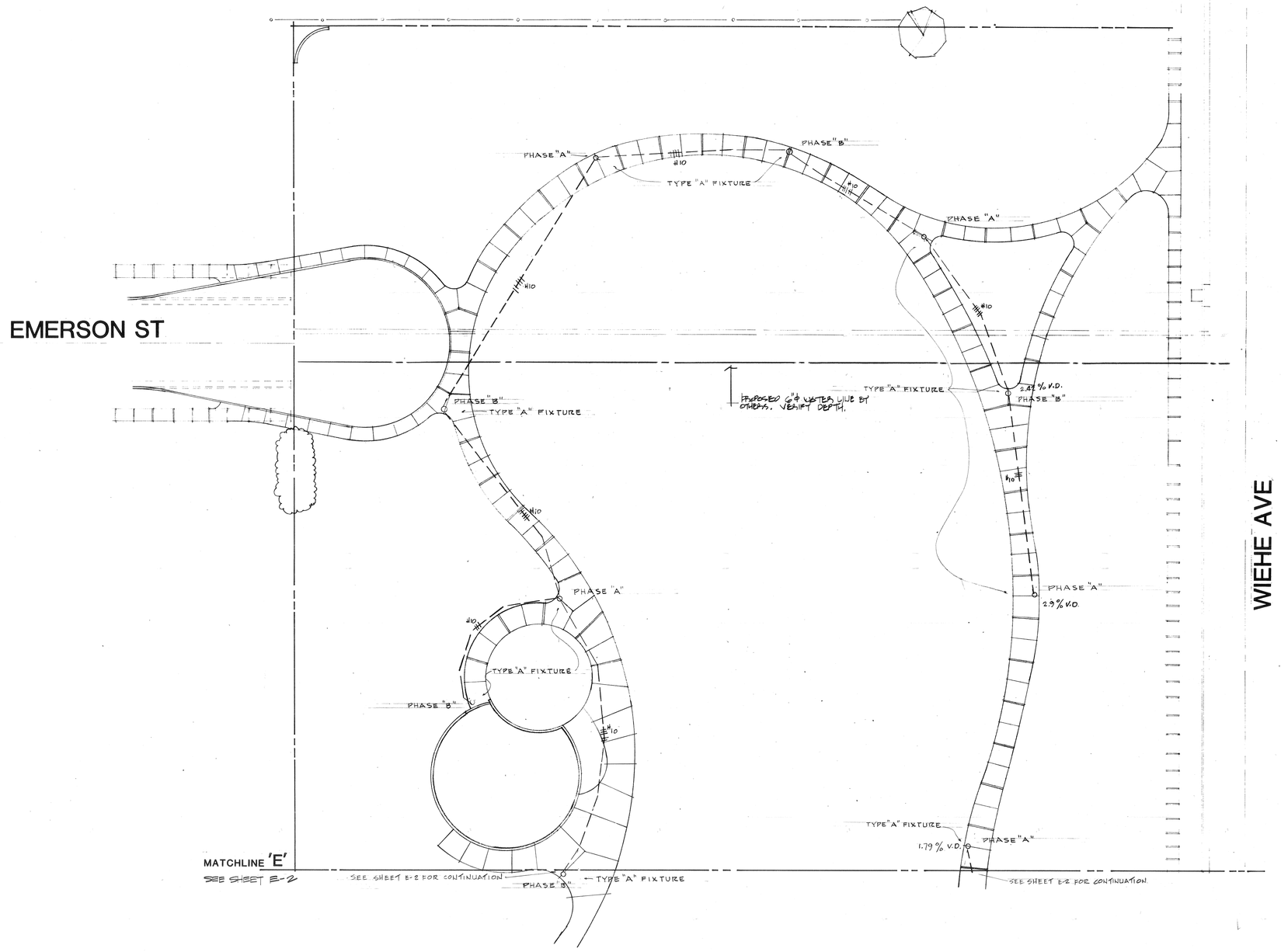

elliott/
maloney
landscape architecture
planning
3903 Brockton Avenue Suite 2 Riverside California 92501 (714) 369-0700

SHEET DESCRIPTION:
LIGHTING PLAN

PROJECT:
MOUNTAIN VIEW PARK

REVISIONS:	DATE: 22 MAY 86
	JOB 85047M
	DRAWN BY: JT.
	CHECKED BY:

SCALE: 1" : 20'-0"

NORTH

SHEET: E-1 OF 28

KEN MATSUOKA E.E. INC.
479 N.Tustin Ave.
ORANGE, CALIFORNIA
(714) 633-7761 CA. Reg. #E-2617

BISHOP GRAPHICS/ACCUPRESS
REORDER NO. A35099

ONGE P0312

NOTES

1. Security light with Photocell mounted in neck of fixture.

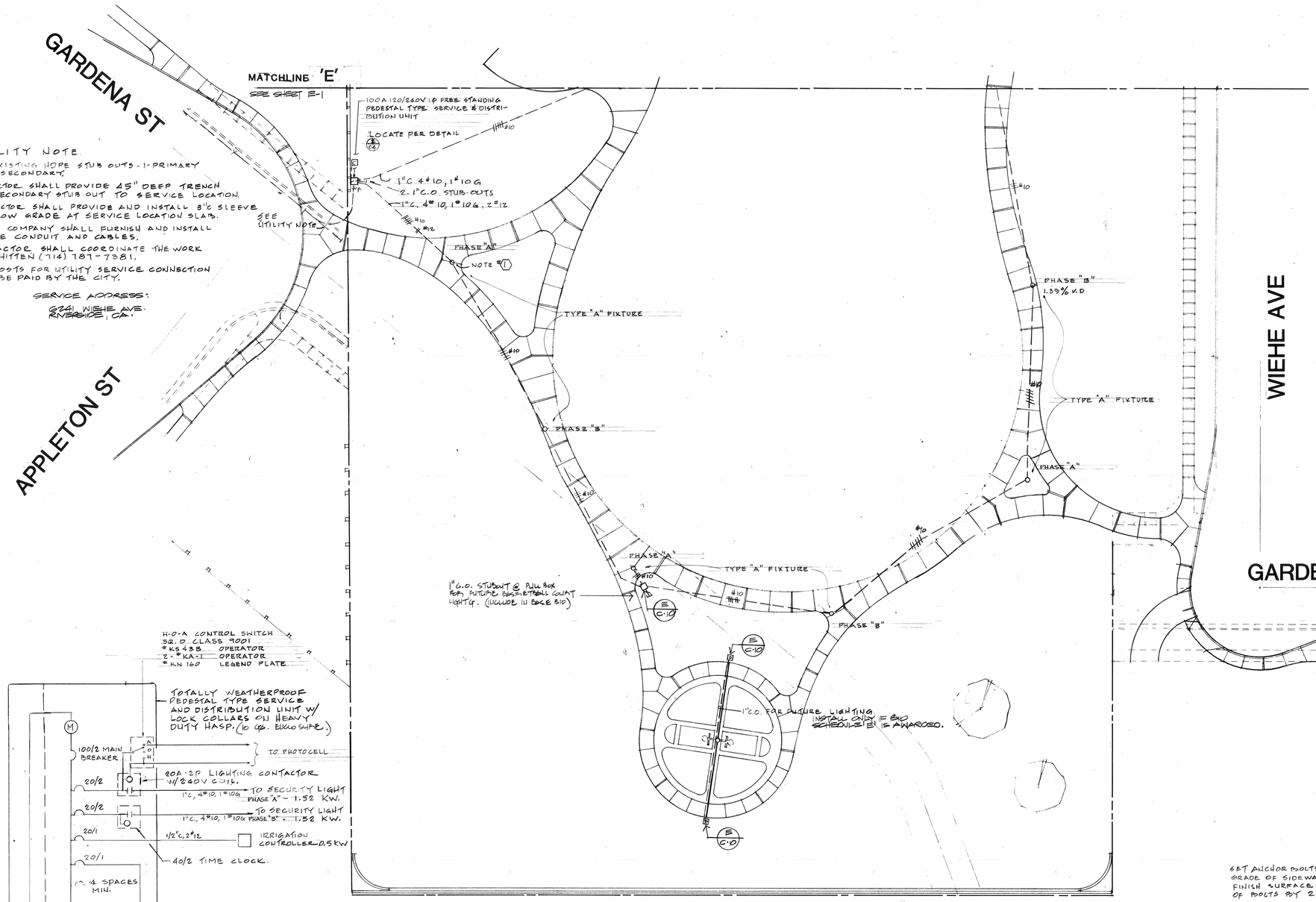

UTILITY NOTE

1. 2-2" EXISTING HDPE STUB OUTS - 1-PRIMARY AND 1-SECONDARY.
2. CONTRACTOR SHALL PROVIDE 45" DEEP TRENCH FROM SECONDARY STUB OUT TO SERVICE LOCATION.
3. CONTRACTOR SHALL PROVIDE AND INSTALL 3"C SLEEVE 18" BELOW GRADE AT SERVICE LOCATION SLAB.
4. UTILITY COMPANY SHALL FURNISH AND INSTALL SERVICE CONDUIT AND CABLES.
5. CONTRACTOR SHALL COORDINATE THE WORK BILL WHITTEN (714) 787-7381.
6. ALL COSTS FOR UTILITY SERVICE CONNECTION SHALL BE PAID BY THE CITY.

SERVICE ADDRESS:
8241 WIEHE AVE.
RIVERSIDE, CA.

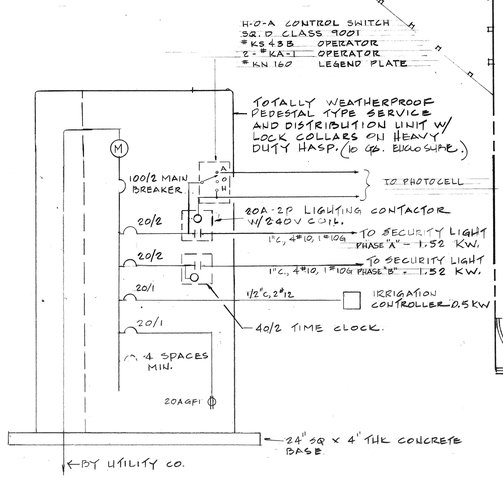

SINGLE LINE DIAGRAM

SERVICE PEDESTAL - MYERS CAT# MEUGQ-M100C/SS100. OR APPROVED EQUAL BY PACIFIC UTILITY PRODUCTS #USP-M100-112-FB MODIFIED. MODIFICATIONS INCLUDE (1) TIME CLOCK, (1) LTG. CONTACTOR, SPACE FOR (1) ADDITIONAL LTG CONTACTOR (FUTURE) AND (1) PHOTOCELL H-O-A SWITCH, AND (1) 20A GFI RECEPTACLE.

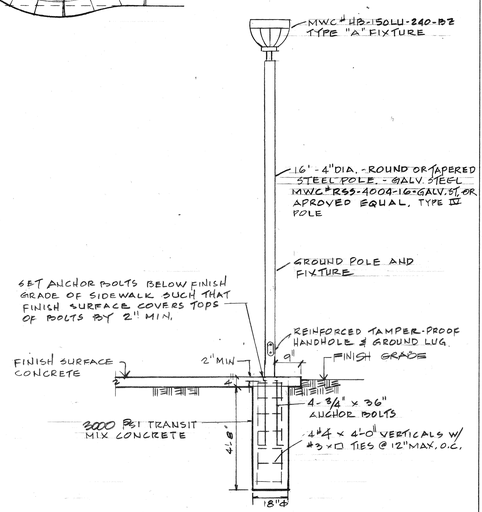

SECURITY LIGHTING STANDARD W/ TYPE "A" FIXTURE

NO SCALE

KEN MATSUOKA E.E. INC.
479 N.Tustin Ave.
ORANGE, CALIFORNIA
(714) 633-7761 CA. Reg. #E-2617

elliott/maloney
landscape architecture
planning
3903 Brockton Avenue, Suite 2, Riverside, California 92501 (714) 369-0700

SHEET DESCRIPTION:
LIGHTING PLAN

PROJECT:
MOUNTAIN VIEW PARK

REVISIONS:	DATE: 22 MAY 86
	JOB 85047M
	DRAWN BY: JT
	CHECKED BY:

SCALE: 1" : 20'-0"

NORTH

SHEET: E-2 OF 28

OWG# P0512

BISHOP GRAPHICS/ ACCUPRESS
REORDER NO. A35099