LA SIERRA PARK
RIVERSIDE, CALIFORNIA

OVERHEAD STRUCTURE IMPROVEMENTS

CITY OF RIVERSIDE
PARK AND RECREATION DEPARTMENT
3900 MAIN STREET
RIVERSIDE, CA 92522

CONSULTANTS

LEGEND

LA SIERRA PARK
SITE MAP

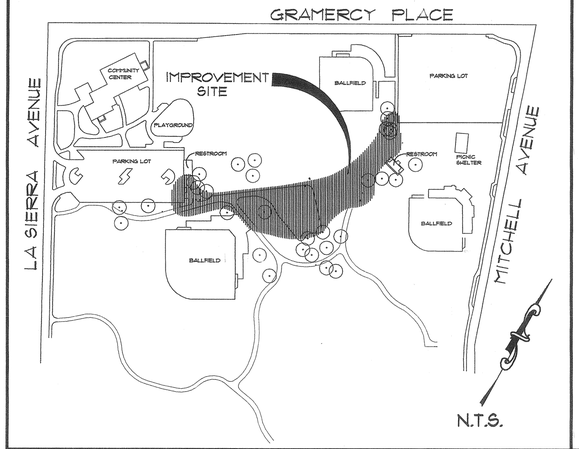

VICINITY MAP

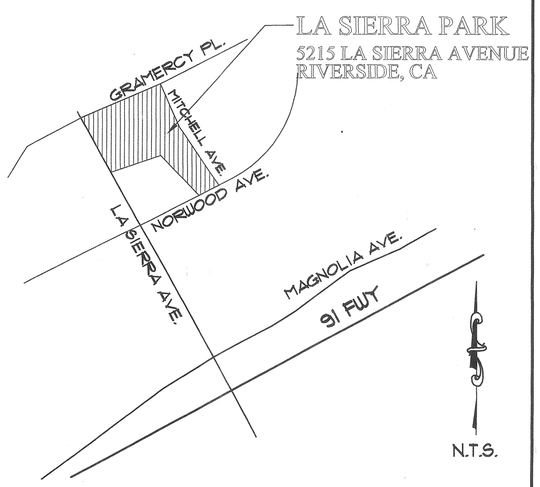

REVISIONS

NO.	REVISION FOR	BY	DATE	APPROVED BY
△				

SHEET INDEX

SHEET	DESCRIPTION
T	TITLE SHEET
L-1	DEMOLITION PLAN
L-2	CONSTRUCTION PLAN
L-3	CONSTRUCTION DETAILS
L-4	IRRIGATION PLAN
L-5	IRRIGATION DETAILS
L-6	PLANTING PLAN

RHA LANDSCAPE ARCHITECTS PLANNERS, INC.
3612 MISSION INN AVE
RIVERSIDE, CALIFORNIA
92501
LIC. #1512
PH. (909) 781-1930
FAX (909) 686-8091

CLIENT:
CITY OF RIVERSIDE
PARK AND RECREATION DEPARTMENT
3900 MAIN STREET
RIVERSIDE, CA 92522

PROJECT:
LA SIERRA PARK
RIVERSIDE CALIFORNIA
OVERHEAD STRUCTURE IMPROVEMENTS

REVISIONS	DATE	BY

REGISTERED LANDSCAPE ARCHITECT
RANDOLPH HLUBIK NO. 1512
Signature
7/31/03
Revision Date
2-12-01
Date
STATE OF CALIFORNIA

SHEET TITLE
TITLE SHEET

DESIGNED	DG
DRAWN	DG
CHECKED	
DATE	1-26-01
SCALE	N.A.
JOB NO.	98151

SHEET
T
OF 7 SHEETS

FILE NAME: G:\PRJ\98PRJ\98151\AUTOCADD\CD'S\98151CV.DWG

PLOT DATE: 1-26-01

DEMOLITION LEGEND

SYM.	QTY.	DESCRIPTION
	L.S.	REMOVE EXISTING ASPHALT PAVING
	N.A.	EXISTING CONCRETE TO REMAIN PROTECT IN PLACE
1	L.S.	REMOVE EXISTING CONCRETE CURB
2	L.S.	EXISTING LIGHT POLE/FIXTURE TO REMAIN PROTECT IN PLACE (except those noted on plan)
3	L.S.	EXISTING TREE TO REMAIN PROTECT IN PLACE
4	L.S.	EXISTING CONCRETE CURB TO REMAIN PROTECT IN PLACE
5	L.S.	REMOVE EXISTING REDWOOD HEADER
6	L.S.	REMOVE EXISTING CONCRETE CURB TO INSTALL NEW H.C. RAMP
7	L.S.	EXISTING D.G. PATH/WALK & CURBING PROTECT IN PLACE

CONTRACTOR SHALL REPAIR ANY DAMAGE TO EXISTING BUILDING AND/OR CONCRETE THAT OCCURS DURING DEMOLITION AND CONSTRUCTION. REPAIRS SHALL BE AT THE CONTRACTOR'S EXPENSE & AT NO ADDITIONAL COST TO THE CITY.

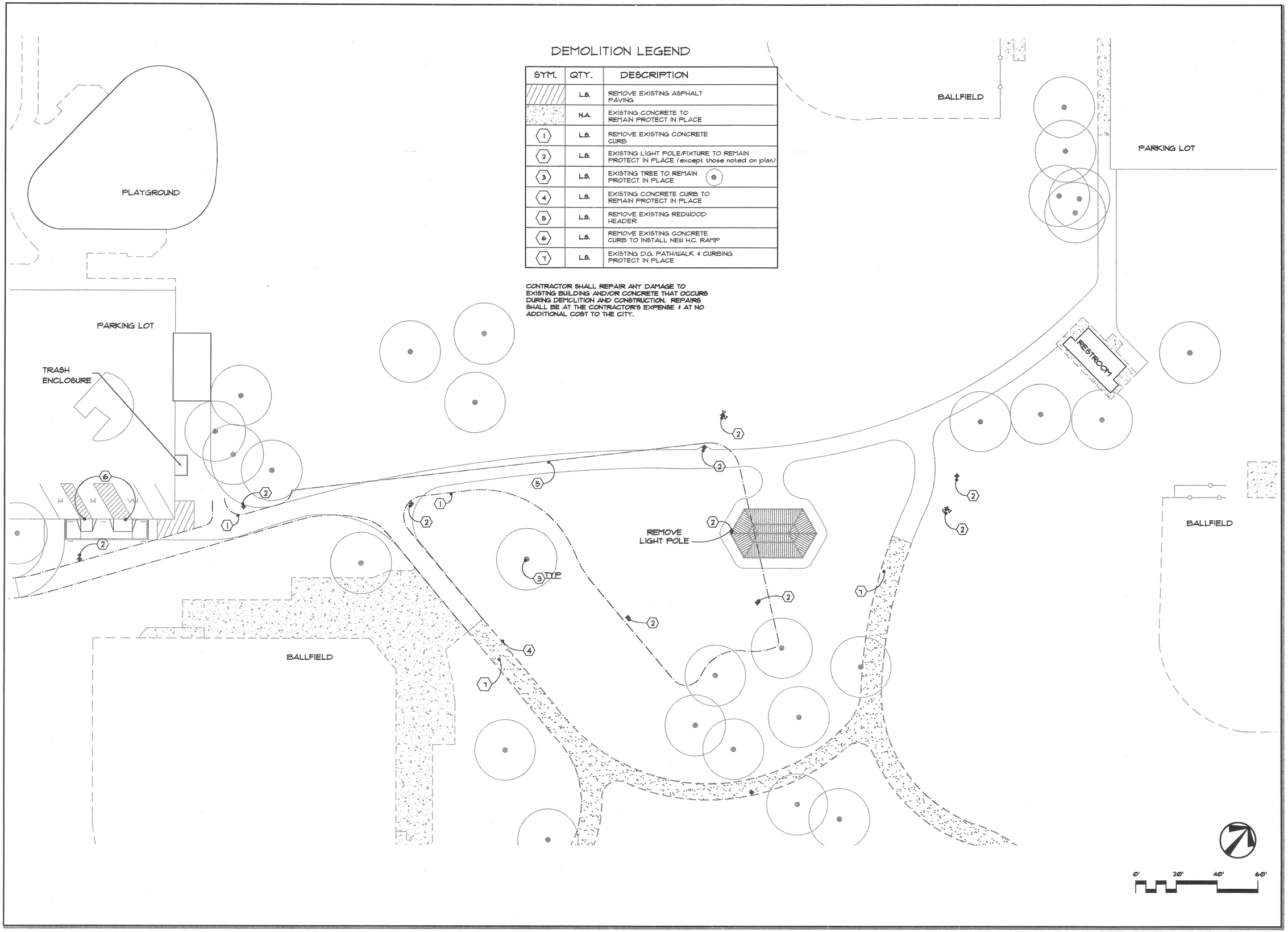

RHA LANDSCAPE ARCHITECTS PLANNERS INC
3612 MISSION INN AVE
RIVERSIDE, CALIFORNIA 92501
LIC. #1512
PH. (909) 781-1930
FAX (909) 686-8091

CLIENT:
CITY OF RIVERSIDE
PARK AND RECREATION DEPARTMENT
3900 MAIN STREET
RIVERSIDE, CA 92522

PROJECT:
LA SIERRA PARK
5215 LA SIERRA AVENUE
RIVERSIDE, CALIFORNIA

REVISIONS	DATE	BY

REGISTERED LANDSCAPE ARCHITECT
RANDOLPH HLUBIK NO. 1512
Signature
7/31/03
Approved Date
2-12-01
Date
STATE OF CALIFORNIA

SHEET TITLE
DEMOLITION PLAN

DESIGNED	DG
DRAWN	DG
CHECKED	
DATE	1-26-01
SCALE	1"=20'
JOB NO.	98151

SHEET
L-1
OF 7 SHEETS

PLOT DATE: 1-26-01

FILE NAME: G:\PRJ\98PRJ\98151\AUTOCADD\CD'S\98151LD.DWG

CONSTRUCTION LEGEND

SYM.	QTY.	DESCRIPTION	DETAIL	SUPPLIER
	L.S.	INSTALL 6" THICK CONCRETE PAVING NATURAL GRAY W/ MED. BROOM FINISH	'A', SHEET L-3	N.A.
1	L.S.	INSTALL OVERHEAD STRUCTURE BY: 'POLYGON' 'POLYGON' MODEL "TIARA/PERGOLA 24' x 42'	'B'&'C' SHEET L-3	MIRACLE PLAYGROUND SALES 800-264-7225
2	L.S.	INSTALL EXPANSION JOINT W/ DOWELS	'A', SHEET L-3	N.A.
3	2	INSTALL HANDICAP RAMP PER CITY OF RIVERSIDE STD. DWG. #304, TYPE I	REFER TO SPEC.'S	N.A.
4	3	INSTALL DISABLED PARKING STALL SIGNS	'D', SHEET L-3	N.A.
5	L.S.	INSTALL DISABLED PARKING STALLS	'F', SHEET L-3	N.A.
6	L.S.	INSTALL SCORE JOINT	'A', SHEET L-3	N.A.

CONTRACTOR SHALL REPAIR ANY DAMAGE TO EXISTING BUILDING AND/OR CONCRETE THAT OCCURS DURING DEMOLITION AND CONSTRUCTION. REPAIRS SHALL BE AT THE CONTRACTOR'S EXPENSE & AT NO ADDITIONAL

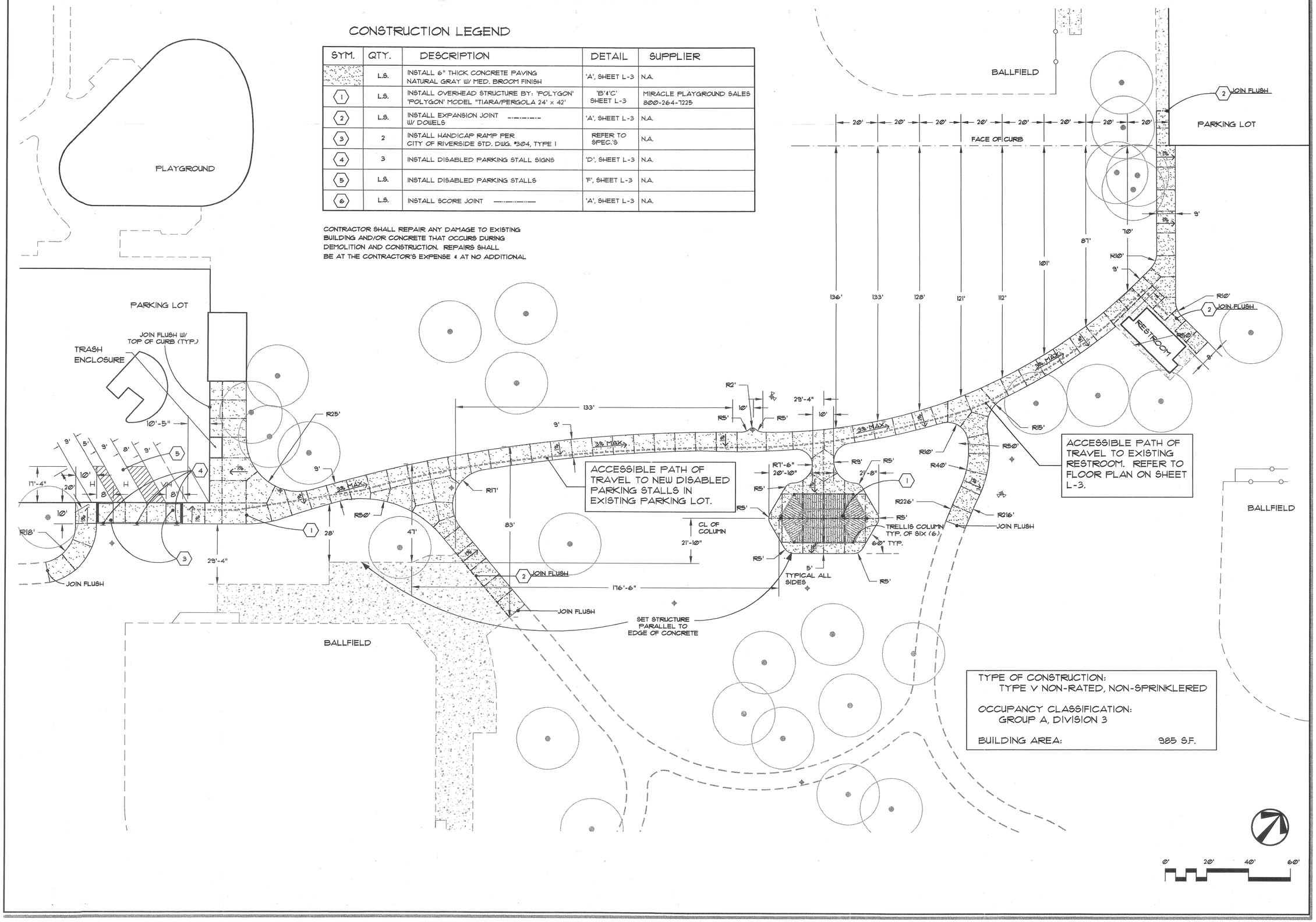

TYPE OF CONSTRUCTION:
TYPE V NON-RATED, NON-SPRINKLERED

OCCUPANCY CLASSIFICATION:
GROUP A, DIVISION 3

BUILDING AREA: 985 S.F.

0' 20' 40' 60'

RHA LANDSCAPE ARCHITECTS PLANNERS, INC.
3612 MISSION INN AVE
RIVERSIDE, CALIFORNIA 92501
LIC. #1512
PH. (909) 781-1930
FAX (909) 686-8091

CLIENT:
CITY OF RIVERSIDE
PARK AND RECREATION DEPARTMENT
3900 MAIN STREET
RIVERSIDE, CA 92522

PROJECT:
LA SIERRA PARK
5215 LA SIERRA AVENUE
RIVERSIDE, CALIFORNIA

REVISIONS	DATE	BY

REGISTERED LANDSCAPE ARCHITECT
RANDOLPH HLUBIK NO. 1512
STATE OF CALIFORNIA

SHEET TITLE
CONSTRUCTION PLAN

DESIGNED	DG
DRAWN	DG
CHECKED	
DATE	1-26-01
SCALE	1"=20'
JOB NO.	98151

SHEET
L-2
OF 7 SHEETS

PLOT DATE: 1-26-01

FILE NAME: G:\PRJ\98PRJ\98151\AUTOCADD\CD'S\98151LC.DWG

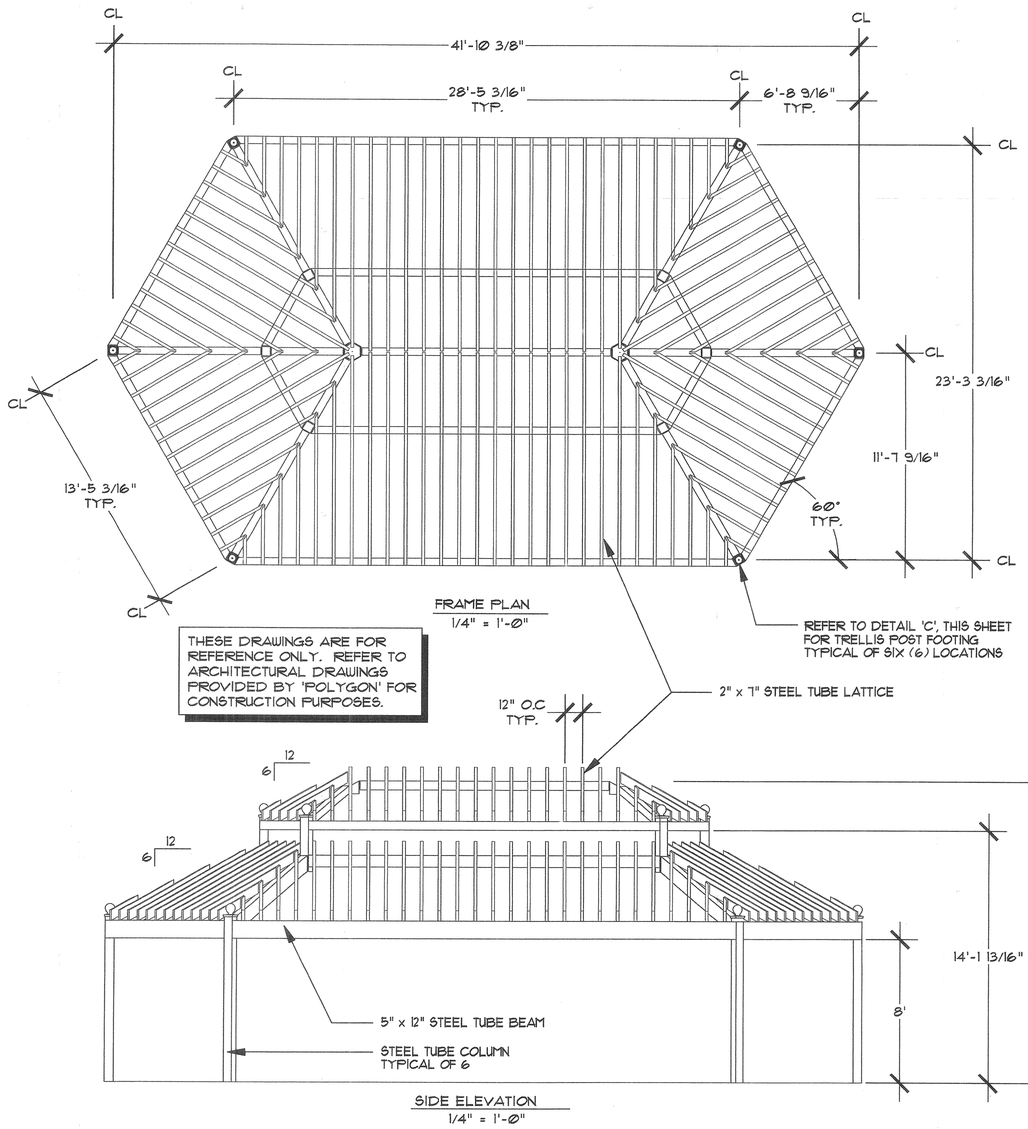

THESE DRAWINGS ARE FOR REFERENCE ONLY. REFER TO ARCHITECTURAL DRAWINGS PROVIDED BY 'POLYGON' FOR CONSTRUCTION PURPOSES.

FRAME PLAN
1/4" = 1'-0"

SIDE ELEVATION
1/4" = 1'-0"

B OVERHEAD TRELLIS

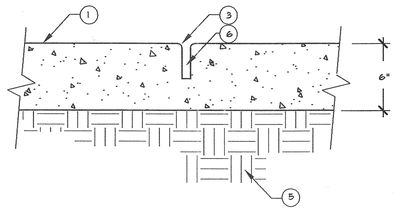

SCORE JOINT

1. CONCRETE PAVING FINISH/COLOR PER PLAN
2. POLYURETHANE CAULKING TO MATCH CONCRETE COLOR SPRINKLE W/ SAND WHILE STILL WET
3. 1/4" RADIUS TROWELED EDGE
4. EXPANSION JOINT PER PLAN
5. 90% COMPACTED SUBGRADE
6. AFTER PRELIMINARY TROWELING, THE CONCRETE SHALL BE PARTED W/ A STRAIGHT EDGE TO A DEPTH OF 1/2 OF THE CONCRETE THICKNESS
7. EXISTING CONCRETE PAVING
8. 1/2" x 12" LONG DOWEL @ 12" O.C. CORE DRILL INTO EXISTING CONCRETE PROVIDE SAMPLE FOR APPROVAL PRIOR TO INSTALLATION

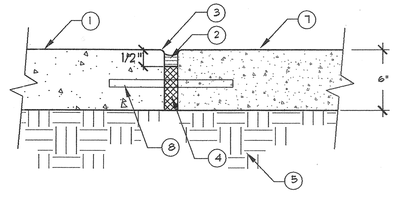

EXPANSION JOINT

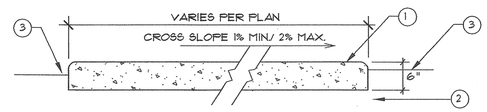

1. CONCRETE PAVING APPLY 1/2" TOOLED RADIUS AT ALL EDGES AND JOINTS MEDIUM BROOM FINISH, W/ 6" SHINER @ ALL EXPANSION JOINTS AND EDGES OF PAVING, COLOR NATURAL GREY
2. COMPACT SUBGRADE TO 90% RELATIVE DENSITY
3. FINISH GRADE 2" BELOW TOP OF WALK IN GROUNCOVER AREAS, 1" BELOW TOP OF WALK IN TURF AREAS.

A CONCRETE PAVING

NOT TO SCALE

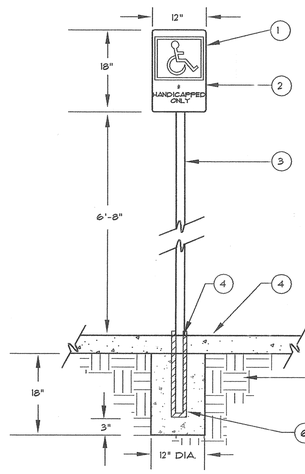

1. 16 GA. GALV. STL. SIGN W/3-1/8"DIA. X 3/4" SHEET METAL SCREWS. PAINT FASTENERS TO MATCH BACKGROUND.
2. INTERNATIONAL SYMBOL OF ACCESSIBILITY & GRAPHICS (WIDTH TO HEIGHT RATIO BETWEEN 3:5 & 1:1, STROKE WIDTH TO HEIGHT RATIO BETWEEN 1:5 & 1:10) ON BLUE BACKGROUND. BLUE SHALL BE EQUAL TO COLOR NO. 15090 IN FEDERAL STANDARD 595B.
3. 2" SQ. GALV. "QUICKFRUNCH" POST W/ 30" ANCHOR SLEEVE (ALL POST MOUNTED SIGNS)
4. CONCRETE PAVING PER PLAN
5. 90% COMPACTED SUBGRAD
6. CONCRETE FOOTING

* ADD " VAN" ON VAN STALL SIGN

NOT TO SCALE

D DISABLED PARKING SIGN

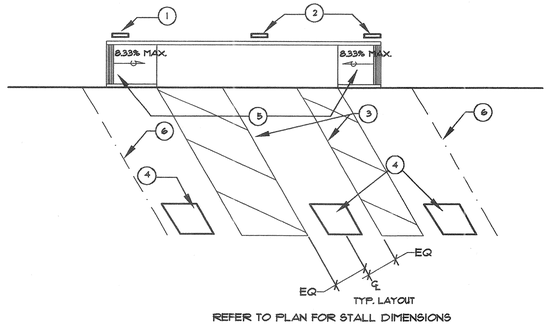

REFER TO PLAN FOR STALL DIMENSIONS

1. INSTALL DISABLED VAN PARKING SIGN PER STATE STANDARDS, 12" BACK OF CURB, PER DETAIL ABOVE
2. INSTALL DISABLED PARKING SIGN PER STATE STANDARDS, 12" BACK OF CURB, PER DETAIL ABOVE
3. 4" LINES PAINTED BLUE
4. 3' SQ. INTERNATIONAL SYMBOL OF ACCESSIBILITY STENCILED IN BLUE PAINT.

DISPLAY

5. INSTALL DISABLED ACCESS RAMPS IN CONCRETE PAVING PER SHEET L-2 AND CITY STANDARD DETAIL 304.
6. 4" WIDE LINES PAINTED WHITE

F DISABLED PARKING STALLS

1"=10'

E RESTROOM PLAN

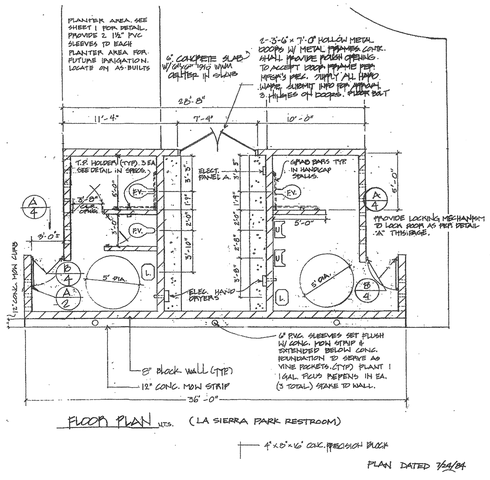

FLOOR PLAN SCALE: 1/4" = 1'-0" (LA SIERRA PARK RESTROOM)

PLAN DATED 7/31/01

NOT TO SCALE

RHA
LANDSCAPE ARCHITECTS PLANNERS, INC.
3612 MISSION INN AVE.
RIVERSIDE, CALIFORNIA 92501
LIC. #1512
PH. (909) 781-1930
FAX (909) 686-8091

CLIENT:
CITY OF RIVERSIDE
PARK AND RECREATION DEPARTMENT
3900 MAIN STREET
RIVERSIDE, CA 92522

PROJECT:
LA SIERRA PARK
5215 LA SIERRA AVENUE
RIVERSIDE, CALIFORNIA

REVISIONS	DATE	BY

REGISTERED LANDSCAPE ARCHITECT
RANDOLPH HUBBS NO. 3151
RENEWAL 08/31/2001
STATE OF CALIFORNIA

SHEET TITLE
CONSTRUCTION DETAILS

DESIGNED	DG
DRAWN	DG
CHECKED	
DATE	1-26-01
SCALE	SEE PLAN
JOB NO.	98151

SHEET
L-3
OF 7 SHEETS

PLOT DATE: 1-26-01

© R. H. A. Landscape Architects - Planners, Inc. expressly reserves its common law copyright and other property rights in these plans. These plans are not to be reproduced, changed or copied in any form or manner whatsoever nor are they to be assigned to any third party without first obtaining the written permission and consent of R. H. A. Landscape Architects - Planners, Inc.

AUTOMATIC IRRIGATION CONTROLLER, RAINBIRD ESP-12MC TO BE INSTALLED INSIDE RESTROOM BUILDING. SEE DETAIL 'F' SHEET L-5.

P.O.C. TIE NEW 4" MAINLINE INTO EXISTING 1 1/4" MAINLINE. CONTRACTOR TO VERIFY LOCATION IN FIELD.

RESTROOM

NEW 4" MAINLINE

EXISTING VALVE: SYSTEM CONNECTION UNKNOWN

C6 69 2"
C5 48 1-1/2"
C4 6 1"
C3 35 1-1/2"
C2 14 1"
C1 20 2"

39.92

BALLFIELD

EXISTING 6" MAINLINE

NEW 4" MAINLINE

DELETE ALL IRRIGATION HEADS INSIDE THE BALLFIELD. ⚠

EXISTING QUICK COUPLER (TYP)

C7 63 1-1/2"
C8 42 1-1/2"
C9 42 1-1/2"

NEW 4" MAINLINE

P.O.C. TIE NEW 3" MAINLINE INTO EXISTING 6" MAINLINE. CONTRACTOR TO VERIFY LOCATION IN FIELD.

C10 70 2"
C11 64 2"
C12 56 1-1/4"

SPRINKLER LEGEND

SYMBOL	MANUFACTURER/MODEL #	NOZZLE	RAD.	PSI	FLOW (GPM) Q	T	H	F	Van	DETAIL	NOTES
TURF POP-UP ROTOR HEAD											
	TORO XP300-Q-360-07	07 (Q)	36'	35	1.43					'A' SHEET L-5	
	TORO XP300P-F-360-07	07 (F)	36'	35				9.7		'A' SHEET L-5	
	TORO XP300P-H-180-07	07 (H)	36'	35			2.85			'A' SHEET L-5	
	TORO 664-180-01-42	42 (H)	52'	40			6.0			'A' SHEET L-5	
	TORO 664-360-01-42	42 (F)	52'	40				12		'A' SHEET L-5	
	TORO XP300-F-180-05	05 (F)	28'	40				4		'A' SHEET L-5	
	TORO 664-360-01-40	42 (F)	52'	40				7.3		'A' SHEET L-5	
TURF POP-UP SPRAY HEAD											
	RAINBIRD 1806-SAM-PRS-15	QAH/PVAN	13'-15'	30	.52	-	1.85	3.1	.52-2.78	'C' SHEET L-5	

EQUIPMENT LEGEND

SYMBOL	MANUFACTURER/MODEL #	SIZE	DETAIL	NOTES
C	RAINBIRD CONTROLLER ESP-12MC WALL MOUNT	12 STA.	'F' SHEET L-5	-
M	EXISTING IRRIGATION WATER METER	2"	-	-
	GRISWOLD 200 SERIES REMOTE CONTROL VALVE	-	'B' SHEET L-5	-
	EXISTING QUICK COUPLER	-	-	-
	EXISTING IRRIGATION MAINLINE	-	-	-
	CLS 315 PVC MAINLINE - 18" MIN. COVER	-	'D' & 'E' SHEET L-5	-
	SCH 40 PVC NON-PRESSURE LATERAL LINE - 12" MIN. COVER	-	'D' & 'E' SHEET L-5	-
	SCH 40 PVC IRRIGATION PIPE / WIRE SLEEVE - 24" MIN. COVER	-	'D' & 'E' SHEET L-5	-

PIPE SIZING CHART

	3/4" PIPE
I	1" PIPE
II	1 1/4" PIPE
III	1 1/2" PIPE
T	2" PIPE
T	2 1/2" PIPE
T	3" PIPE
II	4" PIPE
II	6" PIPE
III	8" PIPE

SCH 80 PVC SLEEVING CHART

1 1/4" SLEEVE	1-4 WIRES	1/2" PIPE
1 1/2" SLEEVE	5-10 WIRES	3/4" PIPE
2" SLEEVE	11-20 WIRES	1" PIPE
2 1/2" SLEEVE	21-30 WIRES	1 1/4" PIPE
3" SLEEVE	31-40 WIRES	1 1/2" PIPE
4" SLEEVE	41-60 WIRES	2" PIPE
6" SLEEVE	61-99 WIRES	2 1/2"/3" PIPE
8" SLEEVE	100+ WIRES	4" PIPE
10" SLEEVE	N/A	6" PIPE

STATION NUMBER	
FLOW (GPM)	VALVE SIZE

0' 20' 40' 60'

RHA LANDSCAPE ARCHITECTS PLANNERS INC
3612 MISSION INN AVE
RIVERSIDE, CALIFORNIA 92501
LIC. #1512
PH. (909) 781-1930
FAX (909) 686-9091

CLIENT:
CITY OF RIVERSIDE
PARK AND RECREATION DEPARTMENT
3900 MAIN STREET
RIVERSIDE, CA 92522

PROJECT:
LA SIERRA PARK
5215 LA SIERRA AVENUE
RIVERSIDE, CALIFORNIA

REVISIONS	DATE	BY
⚠	3/27/02	EL

REGISTERED LANDSCAPE ARCHITECT
RANDOLPH HEUBLEIN
12/31/02
2-17-0
Date
STATE OF CALIFORNIA

SHEET TITLE
IRRIGATION PLAN

DESIGNED	DG/CA
DRAWN	CA
CHECKED	
DATE	7-11-00
SCALE	1"=20'
JOB NO.	98151

SHEET
L-4
OF 7 SHEETS

FILE NAME: G:\PROJ\98PROJ\98151\AUTOCAD\CD\98151IR.DWG

PLOT DATE: 10-26-00

© R.H.A. Landscape Architects - Planners, Inc. expressly reserves its common law copyright and other property rights in these plans. These plans are not to be changed or copied in any form or manner whatsoever nor are they to be assigned to any third party without first obtaining the written permission and consent of R.H.A. Landscape Architects - Planners, Inc.

J

G

D TRENCHING

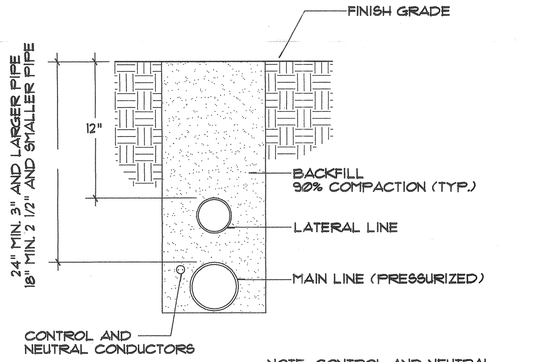

NOTE: CONTROL AND NEUTRAL CONDUCTORS SHALL BE INSTALLED WITH A MINIMUM OF 18" EARTH COVER

IRRIGATION PIPING TO BE SLEEVED UNDER ALL HARDSCAPE AREAS

SLEEVING TO BE INSTALLED WITH A MINIMUM OF 24" EARTH COVER

A TURF ROTOR

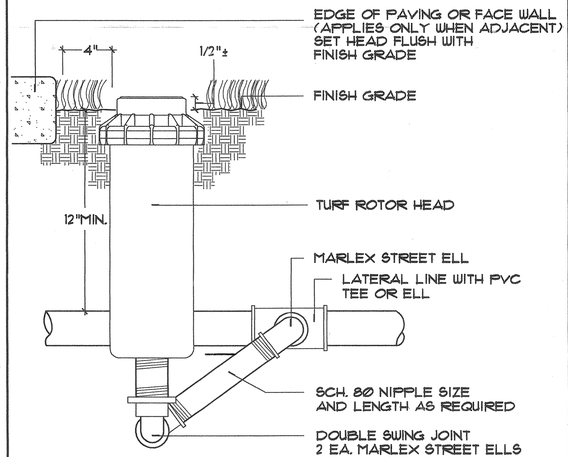

K

H

E SLEEVING

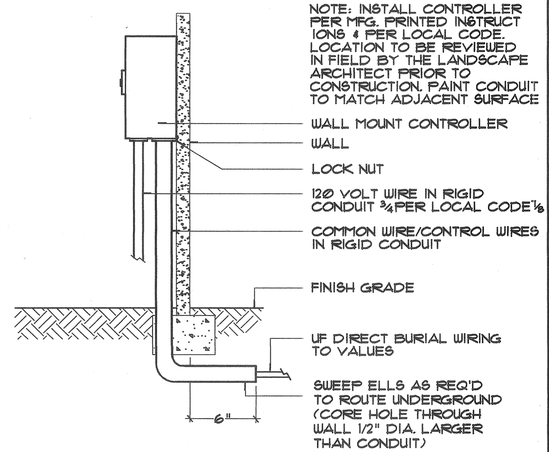

B CONTROL VALVE

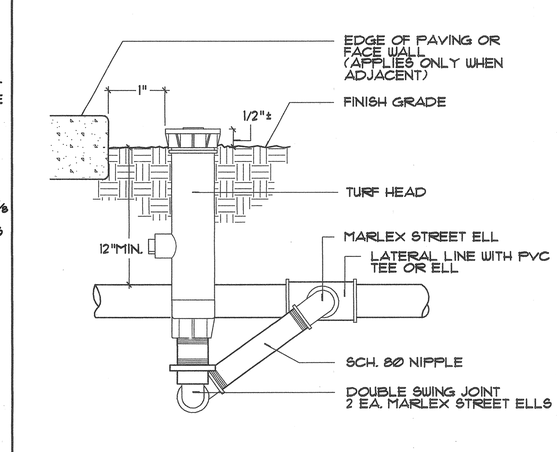

L

I

F CONTROLLER

C SPRAY HEAD

RHA
LANDSCAPE ARCHITECTS
PLANNERS, INC.
3512 MISSION INN AVE
RIVERSIDE, CALIFORNIA
92501
LIC. #1512
PH. (909) 781-1930
FAX (909) 686-8091

CLIENT:
CITY OF RIVERSIDE
PARK AND RECREATION DEPARTMENT
3900 MAIN STREET
RIVERSIDE, CA 92522

PROJECT:
LA SIERRA PARK
5215 LA SIERRA AVENUE
RIVERSIDE, CALIFORNIA

REVISIONS	DATE	BY

REGISTERED LANDSCAPE ARCHITECT
RANDOLPH "HUBBIE" HOLMES
7/31/03
EXPIRATION DATE
STATE OF CALIFORNIA

SHEET TITLE
IRRIGATION DETAILS

DESIGNED	DG
DRAWN	DG
CHECKED	
DATE	1-26-01
SCALE	N.T.S
JOB NO.	98151

SHEET
L-5
OF 7 SHEETS

FILE NAME: G:\JOBS\98151\ADD\ADD98151-L5.DWG

PLOT DATE: 1-26-01

© R.H.A. Landscape Architects - Planners, Inc., expressly reserves its common law copyright and other property rights in these plans. These plans are not to be changed or copied in any form or manner whatsoever nor are they to be assigned to any third party without first obtaining the expressed written permission and consent of R.H.A. Landscape Architects - Planners, Inc.

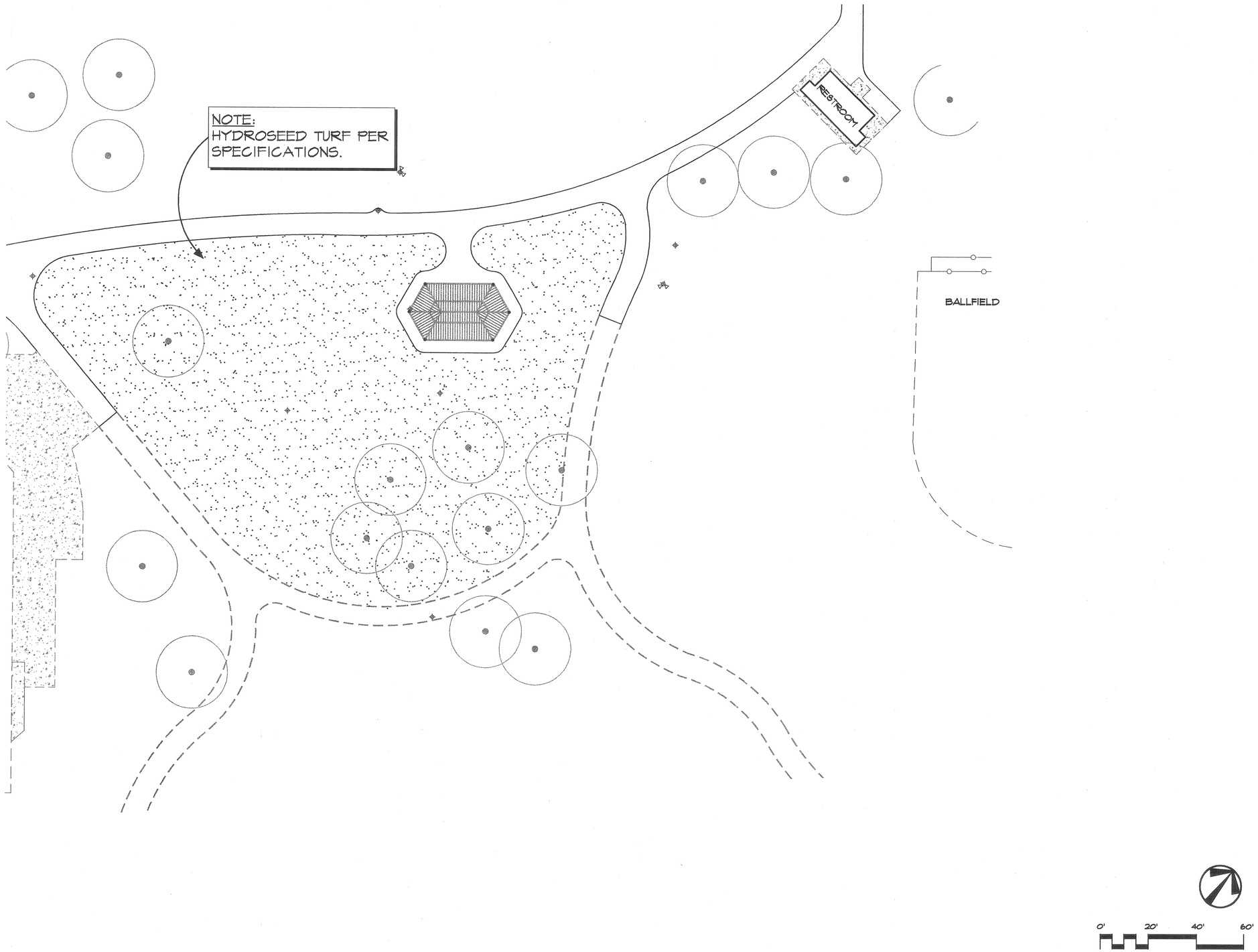

RHA
LANDSCAPE ARCHITECTS PLANNERS INC
3612 MISSION INN AVE
RIVERSIDE, CALIFORNIA
92501
LIC. #1512
PH. (909) 781-1930
FAX (909) 686-8091

CLIENT:
CITY OF RIVERSIDE
PARK AND RECREATION DEPARTMENT
3900 MAIN STREET
RIVERSIDE, CA 92522

PROJECT:
LA SIERRA PARK
5215 LA SIERRA AVENUE
RIVERSIDE, CALIFORNIA

REVISIONS	DATE	BY

REGISTERED LANDSCAPE ARCHITECT
RANDOLPH HLUBIK NO. 1512
Signature
7/31/2003
Revision Date
2-12-01
Date
STATE OF CALIFORNIA

SHEET TITLE
PLANTING PLAN

DESIGNED	DG
DRAWN	CA
CHECKED	
DATE	1-26-01
SCALE	1"=20'
JOB NO.	98151

SHEET
L-6
OF 7 SHEETS

© R. H. A. Landscape Architects - Planners, Inc. expressly reserves its common law copyright and other property rights in these plans. These plans are not to be reproduced, changed or copied in any form or manner whatsoever nor are they to be assigned to any third party without first obtaining the express written permission.

FILE NAME: G:\PRJ\98PRJ\98151\AUTOCAD\CD'S\98151p1.DWG

N:\Projects\98prj (CD)\98151\AUTOCAD\CD'S\11-29-00\Lasierra\98151pl.dwg, Layout1, 02/12/01 09:06:51 AM, STT, STT.R
PLOT DATE: 9-11-00

POWER AND TELEPHONE UTILITY GENERAL NOTES

A. UTILITY POINTS OF SERVICE AND WORK/MATERIAL SHOWN ARE BASED ON PRELIMINARY INFORMATION ONLY BY THE UTILITY COMPANIES AND ARE FOR BID PURPOSES ONLY.

B. CONTRACTOR SHALL COORDINATE WITH UTILITY COMPANY FOR FINAL AND EXACT WORK/MATERIAL REQUIREMENTS AND CONSTRUCT TO UTILITY COMPANY ENGINEERING PLANS AND SPECIFICATIONS ONLY. CONTRACTOR SHALL FURNISH AND INSTALL ALL CONDUIT, PULL WIRES, CABLES, PULLBOXES, CONCRETE ENGASEMENT OF CONDUIT (IF REQUIRED), TRANSFORMER PAD, BARRIERS, POLE RISERS, TRENCHING, BACKFILL, PAY ALL UTILITY COMPANY FEES AND INCLUDE ALL REQUIREMENTS IN SCOPE OF WORK.

C. CALL "UNDERGROUND ALERT" BEFORE YOU DIG:
NORTHERN CALIFORNIA: 1-800-642-2444
SOUTHERN CALIFORNIA: 1-800-422-4133

D. UTILITY CO. CONTACTS:

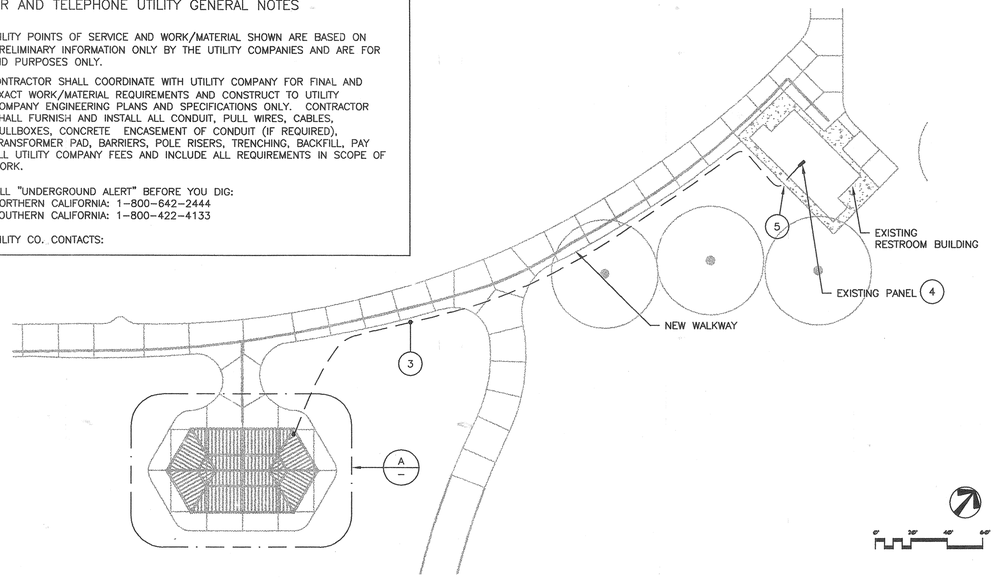

Electrical Site Plan (B)
1"=20'

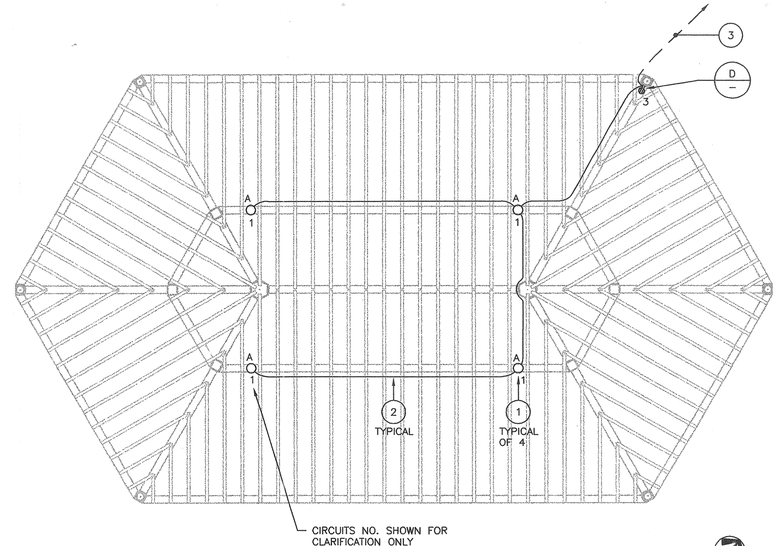

Trellis Detail (A)
1/4"=1'-0"

SECTION 16000 ELECTRICAL SPECIFICATIONS

GENERAL
A. SUBMITTAL OF BID INDICATES CONTRACTOR IS COGNIZANT OF ALL JOB SITE CONDITIONS AND WORK TO BE PERFORMED UNDER THIS CONTRACT.
B. CONTRACTOR SHALL PERFORM ALL VERIFICATION, OBSERVATION, TESTS, AND EXAMINATION WORK PRIOR TO THE ORDERING OF THE ELECTRICAL EQUIPMENT AND THE ACTUAL CONSTRUCTION. HE SHALL ISSUE A WRITTEN NOTICE OF ALL FINDINGS TO THE ARCHITECT LISTING ALL MALFUNCTIONS, FAULTY EQUIPMENT AND DISCREPANCIES.
C. HEIGHTS SHALL BE VERIFIED WITH OWNER PRIOR TO INSTALLATION.
D. THE ELECTRICAL PLANS ARE DIAGRAMMATIC ONLY, FOLLOW AS CLOSELY AS POSSIBLE.
E. EACH CONDUCTOR OF EVERY SYSTEM SHALL BE PERMANENTLY TAGGED IN EACH PANELBOARD, PULLBOX, J-BOX, SWITCH BOX, ETC., IN COMPLIANCE WITH OCCUPATIONAL SAFETY AND HEALTH ACT (O.S.H.A.).
F. ELECTRICAL CONTRACTOR SHALL PROVIDE ALL LABOR MATERIALS, INSURANCE, EQUIPMENT, INSTALLATION, CONSTRUCTION TOOLS, TRANSPORTATION, ETC., FOR A COMPLETE AND PROPERLY OPERATIVE SYSTEM, ENERGIZED THROUGHOUT AND AS INDICATED ON DRAWINGS, AS SPECIFIED HEREIN AND/OR AS OTHERWISE REQUIRED.
G. ALL MATERIALS AND EQUIPMENT SHALL BE NEW AND IN PERFECT CONDITION WHEN INSTALLED AND SHALL BE OF THE BEST GRADE AND OF THE SAME MANUFACTURER THROUGHOUT FOR EACH CLASS OR GROUP OF EQUIPMENT. MATERIALS SHALL BE LISTED AND APPROVED BY UNDERWRITER'S LABORATORY AND SHALL BEAR THE INSPECTION LABEL "J" WHERE SUBJECT TO SUCH APPROVAL. MATERIALS SHALL MEET WITH APPROVAL OF THE DIVISION OF INDUSTRIAL SAFETY, AND ALL GOVERNING BODIES HAVING JURISDICTION. MATERIALS SHALL BE MANUFACTURED IN ACCORDANCE WITH APPLICABLE STANDARDS ESTABLISHED BY A.N.S.I., N.E.M.A., AND N.B.F.U.
H. CONTRACTOR SHALL CARRY OUT HIS WORK IN ACCORDANCE WITH ALL THE LATEST GOVERNING STATE, COUNTY, LOCAL CODES AND O.S.H.A.
I. ELECTRICAL CONTRACTOR SHALL SECURE ALL NECESSARY BUILDING PERMITS AND IS TO PAY ALL FEES.
J. COMPLETE JOB SHALL BE GUARANTEED FOR A PERIOD OF ONE (1) YEAR AFTER THE DATE OF JOB ACCEPTANCE BY OWNER. ANY WORK, MATERIAL OR EQUIPMENT FOUND TO BE FAULTY DURING THAT PERIOD SHALL BE CORRECTED AT ONCE, UPON WRITTEN NOTIFICATION, AT THE EXPENSE OF THE ELECTRICAL CONTRACTOR.
K. PROVIDE THE OWNER WITH ONE SET OF COMPLETE ELECTRICAL "AS BUILT" DRAWINGS AT THE COMPLETION OF THE JOB, SHOWING ACTUAL DIMENSIONS, CIRCUITS AND CHANGES.
L. ALL BROCHURES, OPERATING MANUALS, CATALOGS, SHOP DRAWINGS, ETC., SHALL BE TURNED OVER TO OWNER AT JOB COMPLETION.
M. USE T-TAP CONNECTIONS ON ALL MULTI-CIRCUITS WITH COMMON NEUTRAL CONDUCTOR FOR LIGHTING FIXTURE.
N. ALL TRENCH ROUTING TO BE VERIFIED WITH CITY AND PER CITY STANDARDS INCLUDING RE-COMPACTION. VERIFY TURF SEEDING MIX AND INSTALL AS DIRECTED. REPLACE ALL EXISTING TURF AND LANDSCAPING DISTURBED DUE TO ELECTRICAL CONSTRUCTION.
O. REPLACE EXISTING IRRIGATION LINES AND SPRINKLER HEADS DAMAGED DUE TO ELECTRICAL CONSTRUCTION.
P. THE ENTIRE ELECTRICAL INSTALLATION SHALL BE GROUNDED AS REQUIRED BY ALL APPLICABLE CODES.
Q. PATCH, REPAIR AND PAINT ANY AREA THAT HAS BEEN DAMAGED IN THE COURSE OF THE ELECTRICAL WORK.

16.02 WIRE AND CABLE
A. CONDUCTORS SHALL BE COPPER #12 AWG (THHN/THWN RATED) MINIMUM UNLESS SPECIFICALLY NOTED OTHERWISE ON DRAWINGS.

16.03 CONDUIT
A. RIGID CONDUIT SHALL BE UL LABELED, GALVANIZED ZINC COATED WITH ZINC INTERIOR AND SHALL BE USED WHEN INSTALLED EXPOSED ON BUILDING EXTERIOR. RIGID CONDUIT IN CONTACT WITH EARTH SHALL BE WRAPPED WITH APPROVED 40 MIL PLASTIC TAPE OR PVC COATED CONDUIT.
B. ELECTRICAL METALLIC TUBING SHALL HAVE U.L. LABEL. FITTINGS SHALL BE SET SCREW OR GLAND RING COMPRESSION TYPE. EMT SHALL BE USED ONLY FOR INTERIOR RUNS NOT SUBJECT TO DAMAGE.
C. FLEXIBLE METALLIC CONDUIT SHALL HAVE U.L. LISTED LABEL AND MAY BE USED WHERE PERMITTED BY CODE. FITTINGS SHALL BE "JAKE" OR "SQUEEZE" TYPE. SEAL TIGHT FLEXIBLE CONDUIT. ALL CONDUIT IN EXCESS OF SIX FEET IN LENGTH SHALL HAVE CODE SIZE GROUND WIRE OR APPROVED AS "GROUND".
D. CONDUIT RUNS SHALL BE CONCEALED IN FLOORS, CEILINGS OR WALLS UNLESS INDICATED OTHERWISE. CONDUIT INDICATED EXPOSED SHALL RUN PARALLEL OR AT RIGHT ANGLES TO CEILING, FLOOR, OR BEAMS. VERIFY EXACT ROUTING OF ALL EXPOSED CONDUIT WITH CITY PRIOR TO INSTALLING.
E. ALL UNDERGROUND CONDUIT SHALL BE PVC SCHEDULE 40 (UNLESS NOTED OTHERWISE) AT A MINIMUM DEPTH OF 24" BELOW GRADE. UNDER SLAB CONDUIT MAY BE 6" BELOW SLAB. ALL 90 DEGREE BENDS SHALL BE PVC SCHEDULE 80.
F. ALL CONDUIT INSTALLED SHALL BE CONCEALED UNLESS OTHERWISE NOTED.
G. ALL CONDUIT ONLY (C.O.) SHALL HAVE A PULL WIRE OR ROPE.

16.04 PANEL
A. PROVIDE UPDATED LOAD SCHEDULE IN ALL PANELBOARDS LISTING CIRCUITS AND IDENTIFYING TYPE AND SIZE OF LOAD, TYPEWRITTEN AND PROTECTED BY A TRANSPARENT PLASTIC COVER.

16.05 LIGHTING FIXTURES
A. LOW POWER FACTOR BALLASTS NOT APPROVED. USE HIGH POWER FACTOR BALLASTS ONLY WHEN AVAILABLE. NORMAL POWER FACTOR STANDARD.
B. NO SUBSTITUTIONS ALLOWED WITHOUT PRIOR APPROVAL.

16.06 UTILITY BOX INSTALLATION
A. UTILITY BOXES IN GRADE TO BE QUICKSET NO. E-17 (OR BROOKS NO. 1PB) OR AS INDICATED ON PLANS, CONCRETE TYPE SET ON 12" COMPACTED GRAVEL BASE FOR ALL LIGHTING CIRCUITS IN LANDSCAPE AREAS. PROVIDE BOLT-DOWN CONCRETE LID IN LANDSCAPE AREAS AND STEEL TRAFFIC LIDS IN VEHICLE DRIVE AREAS. ALL LIDS SHALL BE ENGRAVED "ELECTRICAL."
B. INSTALL UTILITY BOXES WITH 12" (MINIMUM) CRUSHED ROCK BASE AND CONCRETE SLAB SURROUNDING AND FLUSH WITH THE TOP OF THE PULL BOX. CONCRETE SLAB SHALL EXTEND 6", MINIMUM, FROM THE PULL BOX IN ALL DIRECTIONS, INCLUDING WHEN IN AC PAVED AREAS. SET APPROXIMATELY 2" ABOVE GRADE IN PLANTERS AND 1" ABOVE PAVING, THE PAVING TO MEET THE SLAB, TO MINIMIZE WATER INTRUSION.
C. ALL CONNECTIONS OR SPLICES LOCATED IN A PULL BOX OR OTHER SPACE BELOW GRADE OR WHERE MOISTURE CAN COLLECT SHALL BE WATERPROOFED. THE RECOMMENDED METHOD IS TO USE SCOTCHLOK, OR APPROVED EQUAL, CONNECTORS AND TO EMBED THE CONNECTORS WITHIN A "UNIPAK" OF 3M "SCOTCHCAST" EPOXY TYPE RESIN. MAKE ALL CONNECTIONS AND SPLICES NECESSARY TO PROPERLY INSTALL AND COMPLETE THE WORK, AND ALL UNDERGROUND SPLICES SHALL BE TAPED. ALL TAPE SHALL BE 3M "SCOTCH" #33 PLASTIC ELECTRICAL TAPE. ALL CONNECTIONS AND SPLICES SHALL BE ELECTRICALLY AND MECHANICALLY PERFECT, AND IN STRICT ACCORDANCE WITH ALL CODE REQUIREMENTS.

16.07 EXECUTION
A. CONNECTORS TERMINAL LUGS SHALL BE USED FOR TERMINATING STRANDED CONDUCTORS #8 AND LARGER.
B. ALL BRANCH CIRCUIT AND FIXTURE WIRING JOINTS, SPLICES AND TAPS FOR CONDUCTORS #10 AND SMALLER SHALL BE MADE WITH UL APPROVED CONNECTORS LISTED FOR 600 VOLTS. CONNECTOR BODIES SHALL CONSIST OF A CONE SHAPE EXPANDABLE COIL SPRING INSERT, INSULATED WITH TEFLON OR PLASTIC SHELL.
C. REMOVE ALL DEBRIS AND MOISTURE FROM THE CONDUITS, BOXES, CABINETS AND LIGHT FIXTURES.
D. DO NOT USE OIL, CREASE, OR SIMILAR SUBSTANCES SHALL BE USED TO FACILITATE THE PULLING IN OF CONDUCTORS. USE MINERALAC, LINSEED SOAP OR SPECIFICALLY APPROVED WIRE PULLING COMPOUND.
E. NEATLY GROUP WIRE IN PANEL CABINETS, PULL BOXES AND WIRING GUTTERS SHALL BE NEATLY GROUPED, TAPED TOGETHER WITH 3M "SCOTCH" #33 PLASTIC ELECTRICAL TAPE, T&B MODEL TY-RAP CABLE STRAP OR LACED WITH #12 STANDARD LACING TWINE AND FANNED OUT TO THE TERMINALS.
F. ALL TRENCH ROUTING TO BE VERIFIED WITH OWNER AND PER OWNER STANDARDS INCLUDING RECOMPACTION.

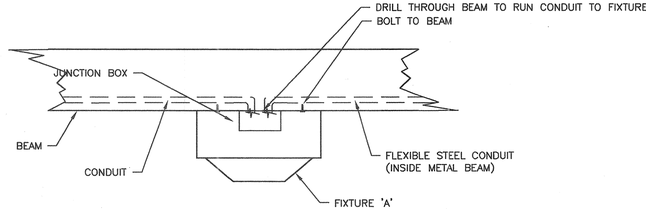

Fixture 'A' Mounting (C)
N.T.S.

PLAN NOTES

(1) FIXTURE TYPICAL 'A'
LITHONIA HV. VRC3-70M-120 (13 LBS.),
9" X 9" X 10" HIGH, 70W, MH 120V
MOUNT TO BOTTOM SIDE OF BEAM.

(2) 1/2" C. 2 #12, RUN CONDUIT INSIDE OF BEAM,
ALL EXPOSED CONDUIT AND JUNCTION BOXES TO BE PAINTED TO MATCH SURFACE ATTACHED TO.

(3) 3/4" C. 3 #10 + 1 #10 G. TO EXISTING PANEL IN EXISTING RESTROOM. SEE SITE PLAN.

(4) 120/240V, 1ø, 3W. PROVIDE TWO 20A/1P CIRCUIT-BREAKERS IN PANEL. PROVIDE 20A/1P RELAY AND CONNECT LIGHT CIRCUIT TO EXISTING TIME CLOCK. VERIFY EXACT LOCATION OF PANEL.

(5) BORE UNDER EXISTING WALK WAY, AND LB CONDULET UP INTO BUILDING AND ROOM WITH PANEL. PATCH/REPAIR/PAINT OPENING INTO EXISTING WALL.

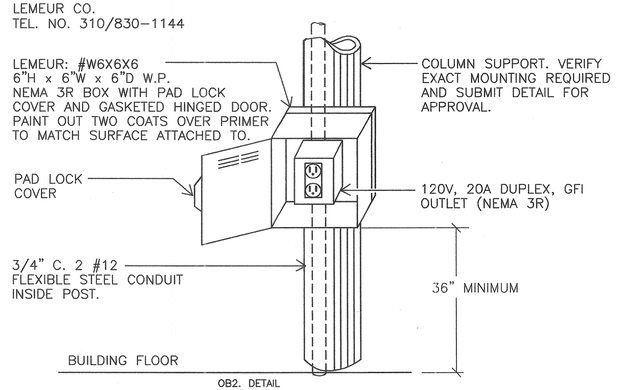

OB2. DETAIL

NOTE:
ALL WIRES FOR FIXTURES TO BE IN FLEXIBLE ELECTRICAL CONDUIT INSIDE POST/BEAMS. CONDUIT SHALL RISE THROUGH COLUMN CONCRETE FOOTING, UP COLUMN TO A DRILLED HOLE, THEN UP TO BEAM TO FIXTURE. ALL CONDUIT MUST PASS THROUGH POST/BEAM VIA A DRILLED HOLE FOR ALL FIXURES/OUTLETS. INSTALLATION CONTRACTOR TO COORDINATE WITH ELECTRICAL CONTRACTOR.

N.T.S. (D)

01-216-1760
REEDCORP ENGINEERING
CONSULTING ELECTRICAL ENGINEERS
2061 Business Center Drive, Suite 110
Irvine, CA 92612
(949) 752-1278 FAX: (949) 752-1287
E-MAIL : ee@reedcorp.net

RLA LANDSCAPE ARCHITECTS PLANNERS INC
3612 MISSION INN AVE
RIVERSIDE, CALIFORNIA
92501
LIC. #1512
PH. (909) 781-1930
FAX (909) 686-8091

CLIENT:
CITY OF RIVERSIDE
PARK AND RECREATION DEPARTMENT
3900 MAIN STREET
RIVERSIDE, CA 92522

PROJECT:
LA SIERRA PARK
5215 LA SIERRA AVENUE
RIVERSIDE, CALIFORNIA

REVISIONS	DATE	BY

SHEET TITLE
ELECTRICAL PLANS

DESIGNED	RR
DRAWN	MH
CHECKED	
DATE	04/17/01
SCALE	SEE PLAN
JOB NO.	98151

SHEET
E-1
OF 1 SHEETS

FILE NAME:

© R.L.A. Landscape Architects Planners, Inc. expressly reserves its common law copyright and other property rights in these plans. These plans are not to be changed or copied in any form or manner whatsoever nor are they to be assigned to any third party without first obtaining the express written permission.

RHA/ST