DRAWING NUMBER
REID
PLAN HOLD CORPORATION • IRVINE, CALIFORNIA
REORDER BY NUMBER 075AR

DRAWING NUMBER
PLAN HOLD CORPORATION • IRVINE, CALIFORNIA
REORDER BY NUMBER 075AR

DRAWING NUMBER
PLAN HOLD CORPORATION • IRVINE, CALIFORNIA
REORDER BY NUMBER 075AR

DRAWING NUMBER
PLAN HOLD CORPORATION • IRVINE, CALIFORNIA
REORDER BY NUMBER 075AR

DRAWING NUMBER
RE-75
PLAN HOLD CORPORATION • IRVINE, CALIFORNIA
REORDER BY NUMBER 075AR

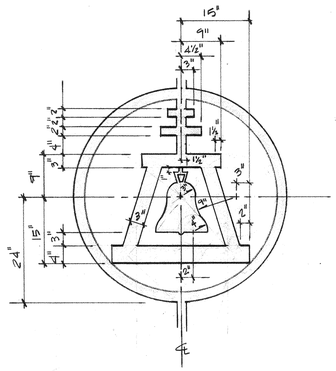

NOTE:
LOGO SHALL BE PAINTED BLUE ON A WHITE FIELD.

RAINCROSS EMBLEM - CENTER COURT LOGO SCALE: 3/4" = 1'-0" | C

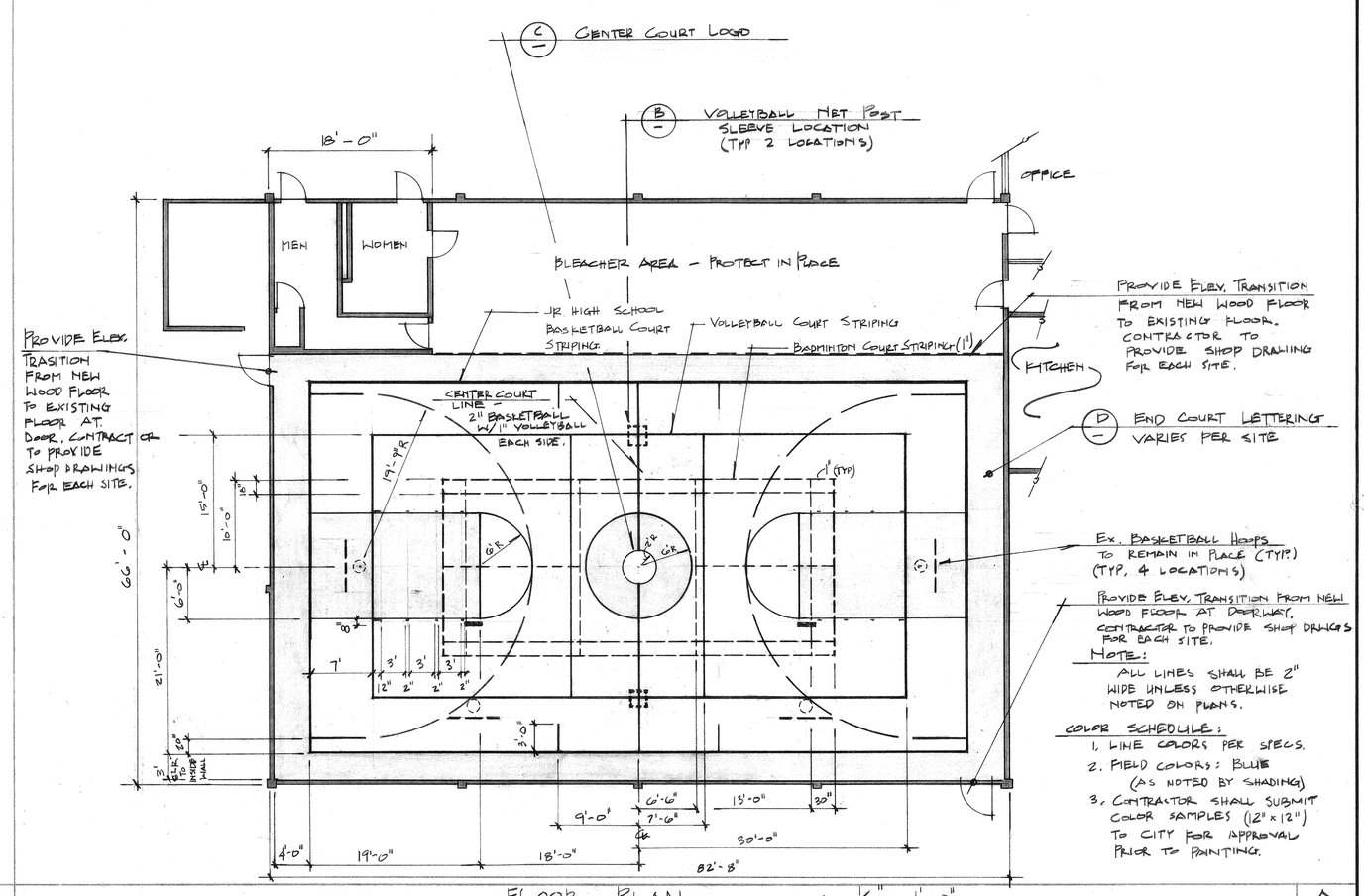

FLOOR PLAN SCALE 1/8" = 1'-0" | A

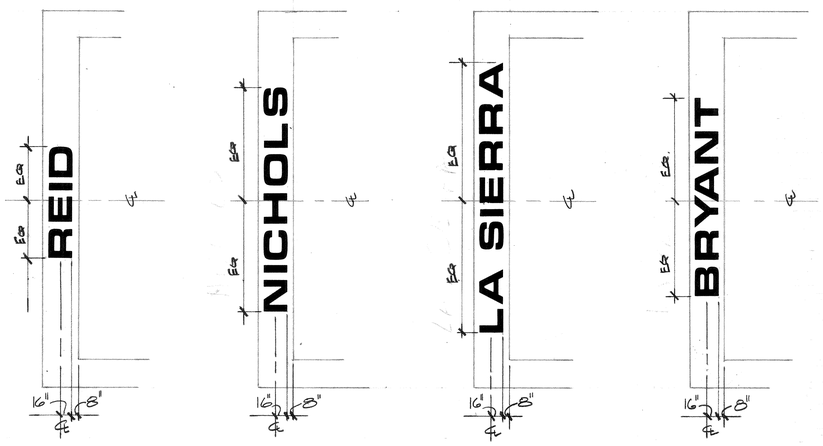

NOTES:
1. LETTER STYLE: MICRGRAMMA BOLD EXTENDED
2. COLOR: WHITE LETTERING ON BLUE FIELD PER △/—
3. EACH RECEIVES END COURT LETTERING AT BOTH ENDS OF COURT.

END COURT LETTERING PER SITE SCALE 1/8" = 1'-0" | D

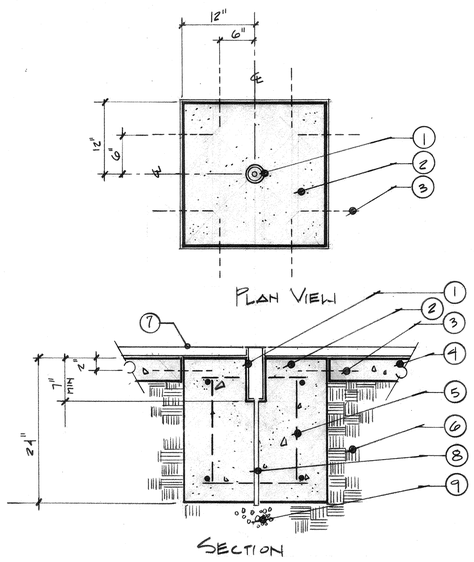

1. VOLLEYBALL NET SLEEVE & CAP PER SPECS.
2. CONCRETE VOLLEYBALL NET SLEEVE FOUNDATION.
3. STEEL DOWELS
4. EXISTING CONCRETE GYMNASIUM FLOOR
5. #3 REBAR CAGE VERTICAL & HORIZONTAL
6. SUBGRADE
7. WOOD FLOOR OVERLAY PER SPECS OR EX. SYNTHETIC FLOOR TO BE PROTECTED IN PLACE.
8. 1/2" PVC DRAIN LINE
9. 1 CU.FT. 3/4" GRAVEL SUMP

VOLLEYBALL NET SLEEVE & FOUNDATION SCALE 1" = 1'-0" | B

REID, NICHOLS, LASIERRA & BRYANT PARKS
GYMNASIUM FLOOR REFURBISHMENT

city of riverside
park & recreation
department
(714) 787-7223
3900 MAIN ST RIVERSIDE, CALIFORNIA 92522

revisions	by

date	4·88
design	AE
drawn	AE
check	
acc't.no.	
SHEET	1 of 1

PLAN #0718