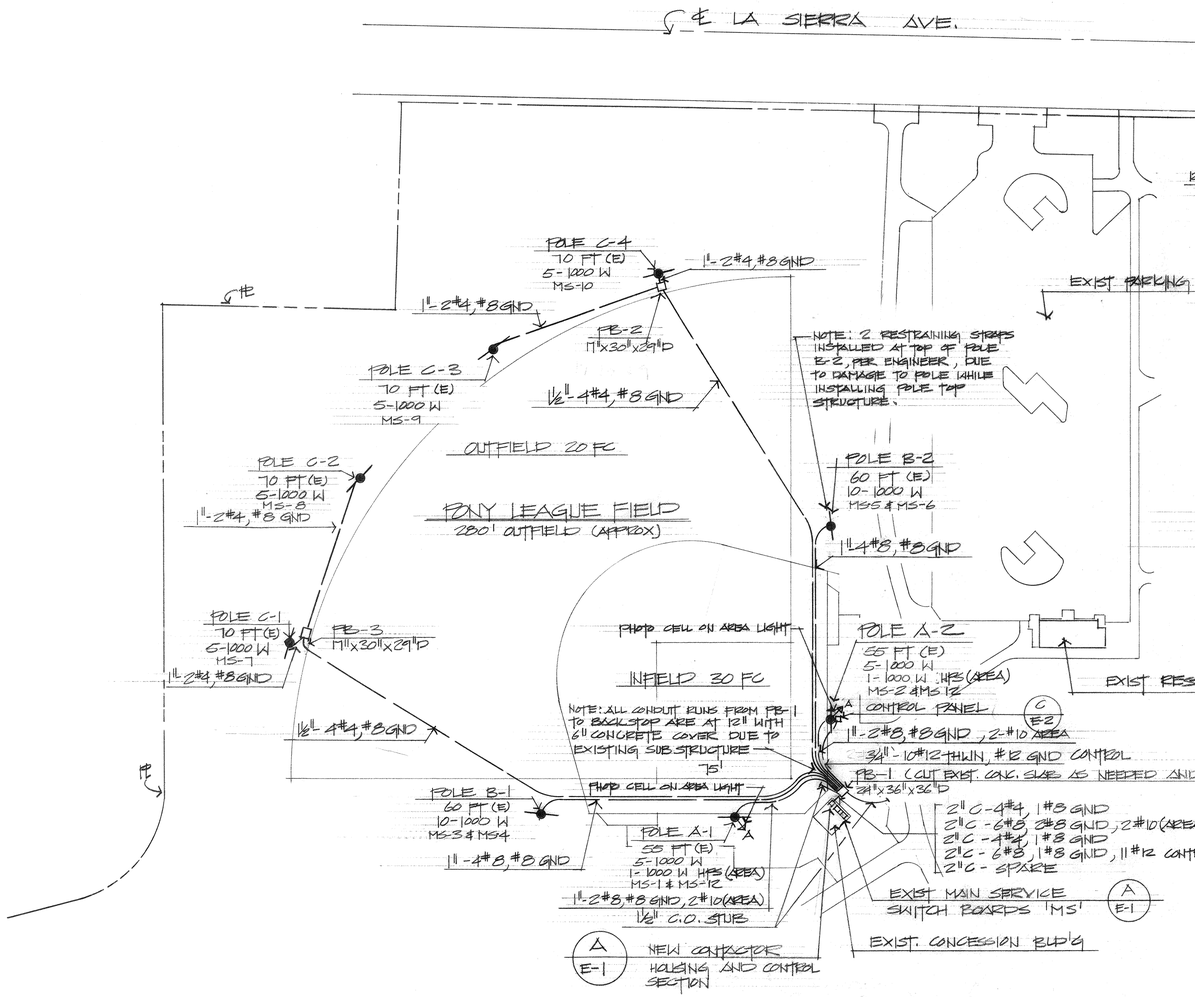

LA SIERRA PARK - SITE ELECTRICAL PLAN (1 / E-1)

SCALE: 1" = 40'-0"

• SEE SHEET E-2 FOR FEEDER DIAGRAM

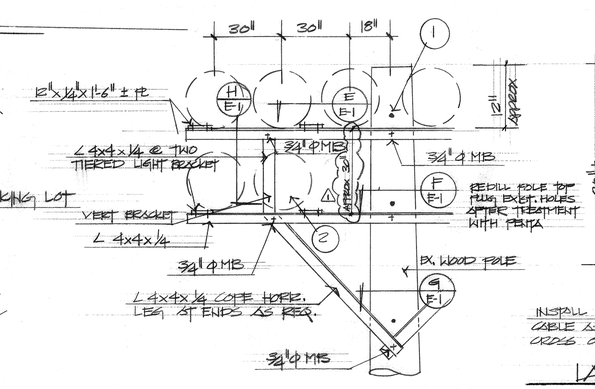

POLE TOP DETAIL (D / E-1)

NTS

SEE ALTERNATE IN SPECIFICATIONS FOR FIXTURE AND SUPPORT.

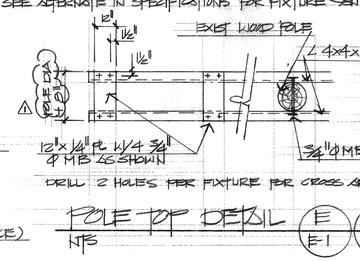

POLE TOP DETAIL (E / E-1) (F / E-1)

NTS

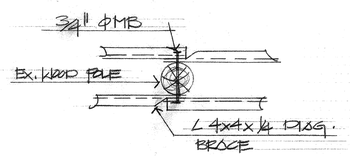

POLE TOP DETAIL (G / E-1)

NTS

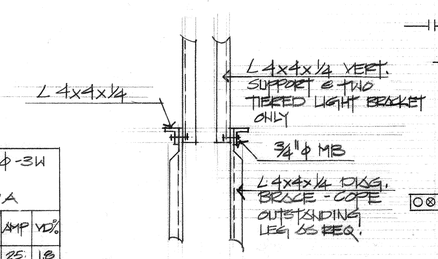

POLE TOP DETAIL (H / E-1)

NTS

① REMOVE EXISTING STEEL ARMS FROM EXISTING WOOD POLES

② TAKE CARE THAT FIXTURE BALL DOES NOT STRIKE VERTICAL BRACKET

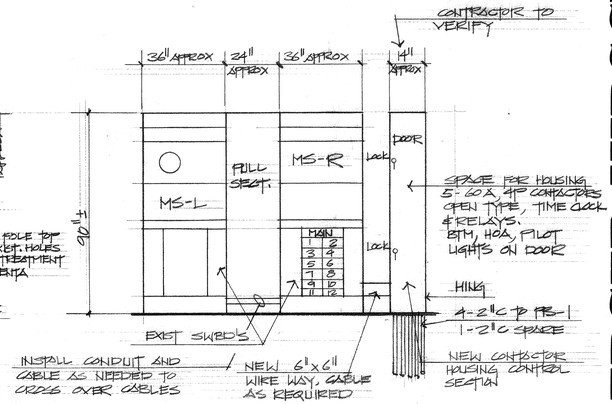

LA SIERRA PARK 'MS' & CONTROL SECTION (A / E-1)

NTS

SPECIAL NOTE TO CONTRACTOR

LA SIERRA AND BRYANT BALLFIELD FACILITIES WILL BE IN USE THROUGHOUT THE DURATION OF THIS CONTRACT BY USER GROUPS. THE CONTRACTOR MUST COORDINATE ALL WORK WITH THE CITY TO MINIMIZE ANY CONFLICTS WITH USER GROUPS.

SYMBOL LIST

- EXISTING MAIN SERVICE SWITCH BOARD 'MS' 120/240 V. 1ϕ
- 60 EXISTING WOOD FLOODLIGHT POLE WITH NEW FLOOD LIGHTS AS NOTED. NUMBER DENOTES HT. ASSUMED. NUMBER OF FIXTURES AS NOTED. CONTRACTOR VARIFY HT.
- PB UNDERGROUND PRE-CAST CONCRETE PULL BOXES
- (E) EXISTING
- UNDERGROUND PVC SCH 40 RIGID CONDUIT 36" BELOW GRADE
- NEW CONTACTOR HOUSING AND CONTROL SECTION
- CIRCUIT BREAKER
- CONTACTOR
- TRANSFORMER
- TC TIME CONTROL CLOCK - 120 V - 2P
- BTM BURNING TIME METER (120 V)
- LIGHT (PILOT)
- PUSHBUTTON AND PILOT LIGHT STATION IN LOCKED HOUSING
- M CURRENT TRANSFORMER AND UTILITY METER
- H HEATER (200 WATT)
- DUPLEX OUTLET 15 A
- S SPST SWITCH 20A AC
- HOA HAND OFF AUTOMATIC SWITCH
- RGC RIGID GALV. STEEL CONDUIT.
- TH THERMOSTAT - REMOTE BULB.
- A 1000 W. HPS AREA FLOODLIGHT
- A PA AREA LIGHT (240 V) WITH PHOTO CELL CONTROL - CH-SAL 1000 LEC 240 WIRE WITH ML 2590 CONTROL

PANEL: MS (LEFT) TYPE: EXIST-SQ D VOLTS: 120/240 V-1ϕ
BLD'G: CONCESSION
MAIN SWITCH: 400 A BUS: 400A FUSE 400A

CIR.	BREAKER AMP.	BREAKER POLES	NO. OUTLETS LTG.	NO. OUTLETS REC.	NO. OUTLETS MISC.	LOAD KVA A	LOAD KVA B	LOAD KVA LCL	REMARKS:
1	50	1							SPARE
2	20	1							NIGHT LTS
3	50	1							SPARE
4	30	1							PARKING LOT LTS
5	20	1							SPARE
6	20	1							BOOTH LTS - KEMAKER
7	20	1							SPARE
8	20	1							POPCORN
9	50	1							SPARE
10	20	1							REFRIG
11	50	1							PLUG #1 & 2
12	20	1							PLUG A
13	50	1							PLUG D & 3
14	20	1							WATER HEATER
15	20	1							TIME CONTROL CLOCK
16	20	1							

CONTRACTOR TO BALANCE LOAD. REUSE EXIST. CIR. BRS. AS REQUIRED WHICH ARE REUSEABLE PROVIDE NEW IF NEEDED.

LA SIERRA PARK 'MS' (LEFT) (B / E-1)

PANEL: 'MS' (RIGHT) TYPE: EXIST-SQ-D VOLTS: 120/240-1ϕ-3W
BLD'G: CONCESSION
MAIN SWITCH: 400A BUS: 400A FUSE 400A

CIR.	BREAKER AMP.	BREAKER POLE	NO. OUTLETS LTG.	NO. OUTLETS REC.	NO. OUTLETS MISC.	LOAD KVA A	LOAD KVA B	LOAD KVA LCL	REMARKS:	AMP	VD%
1	40	2	5			3.0	3.0	7.5	POLE A-1	25	1.8
2	40	2	5			3.0	3.0	7.5	POLE A-2	25	2.1
3	40	2	5			3.0	3.0	7.5	POLE B-1 UPPER	25	2.5
4	40	2	5			3.0	3.0	7.5	POLE B-1 LOWER	25	2.5
5	40	2	5			3.0	3.0	7.5	POLE B-2 UPPER	25	3.2
6	40	2	5			3.0	3.0	7.5	POLE B-2 LOWER	25	3.2
7	40	2	5			3.0	3.0	7.5	POLE C-1	25	2.0
8	40	2	5			3.0	3.0	7.5	POLE C-2	25	2.8
9	40	2	5			3.0	3.0	7.5	POLE C-3	25	2.8
10	40	2	5			3.0	3.0	7.5	POLE C-4	25	3.5
11	20	2			5	1.0	1.0	2.5	CONTACTOR CONTROL		
12	30	2	2			1.0	1.0	2.5	AREA LIGHTS POLES A-1 & A-2	18.8	
						32.0	32.0	80.0	333.3A LCL		

RECONNECT SWITCHBOARDS AS ABOVE. INSTALL ALL NEW CIRCUIT BREAKERS TO FIT EXISTING SWITCH BOARD. 'MS' (RIGHT)

LA SIERRA PARK 'MS' (RIGHT (C / E-1)

HEIMBERGER·HIRSCH
Landscape Architects · Site & Development Planners
515 W. Commonwealth Ave. Suite 205
Fullerton, Ca. 92632 714·773·0973
AILA

Project;
City of Riverside
Park Improvement Plans for
La Sierra Park and Bryant Park

Paul H. Baughman
PAUL BAUGHMAN
PE. E-1840

Date; DEC. 5, 1981
Design; BAUGHMAN
Job No; 81028

Description;
LA SIERRA PARK
BALLFIELD LIGHTS

△ 4-21-82

PLAN NO. P-0010-A

Sheet
E-1
1 OF 2

REGISTERED PROFESSIONAL ENGINEER PAUL H. BAUGHMAN E1840 ELECTRICAL STATE OF CALIFORNIA

REGISTERED LANDSCAPE ARCHITECT CARL O. HEIMBERGER #1523 Signature 1-15-82 Date STATE OF CALIFORNIA

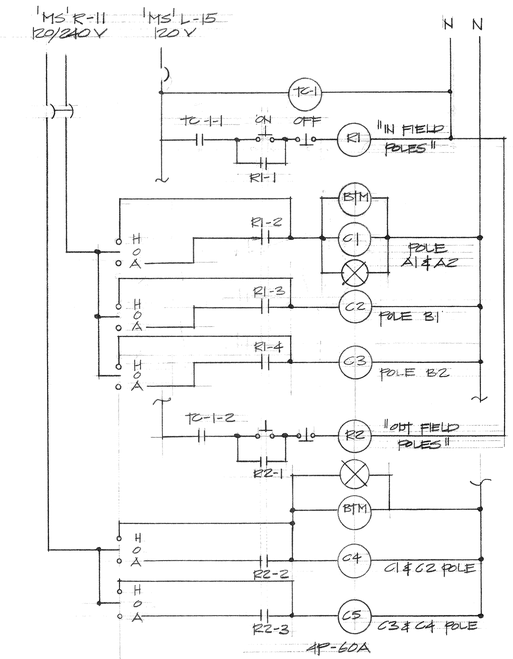

LA SIERRA PARK CONTROL DIAGRAM (A / E-2)
NTS

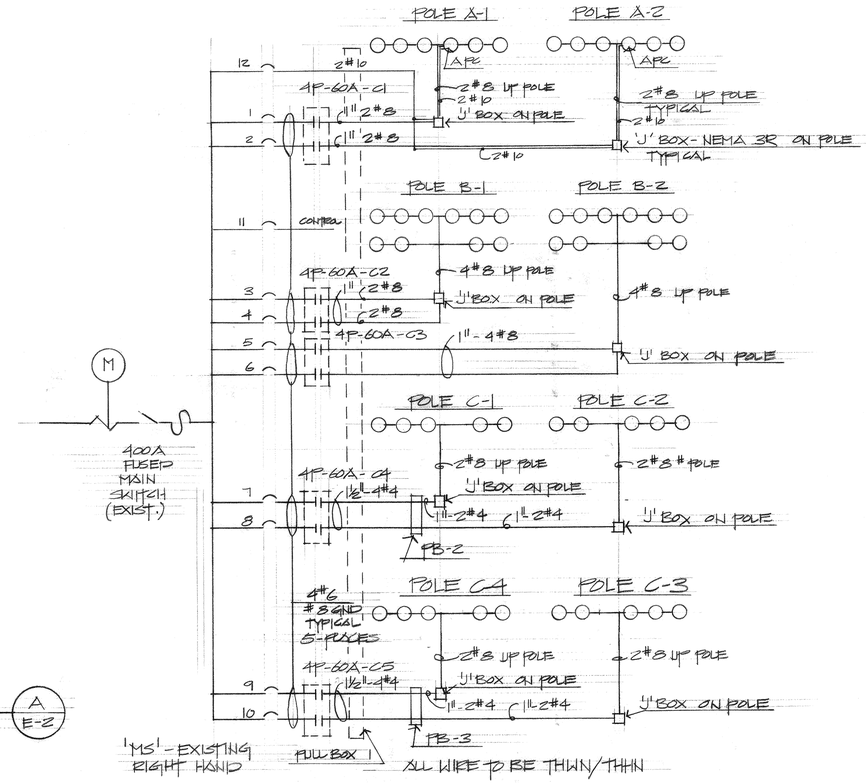

LA SIERRA PARK FEEDER DIAGRAM (B / E-2)
NTS

ALL FLOODLIGHTS - 1000 W METAL HALIDE - CLEAR LAMP
240 V REGULATOR BALLAST AND HOODS

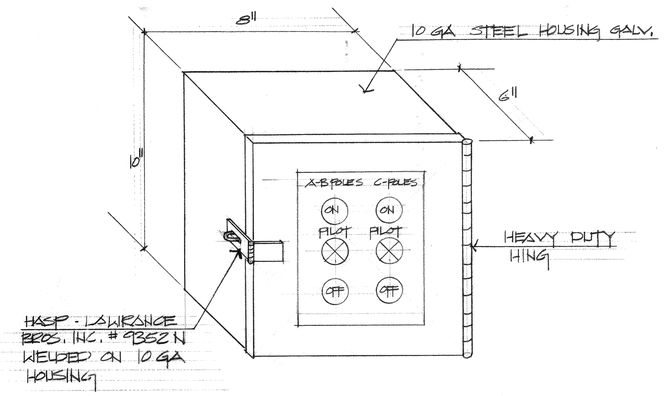

LA SIERRA PARK CONTROL PANEL (C / E-2)
NTS
CONTRACTOR TO SUBMIT SHOP DRAWINGS

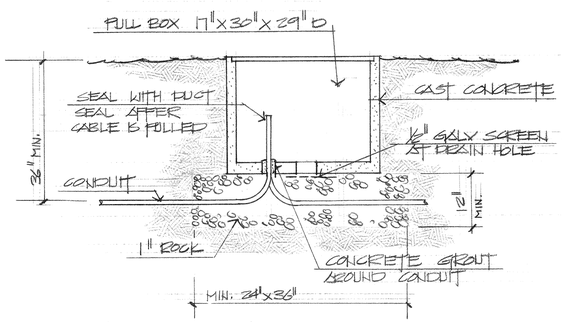

PB-2 & PB-3 DETAIL (D / E-2)
NTS

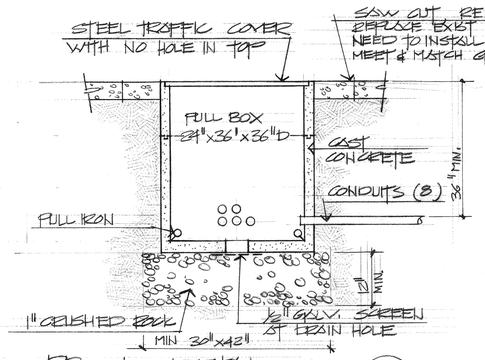

PB-1 DETAIL (E / E-2)
NTS

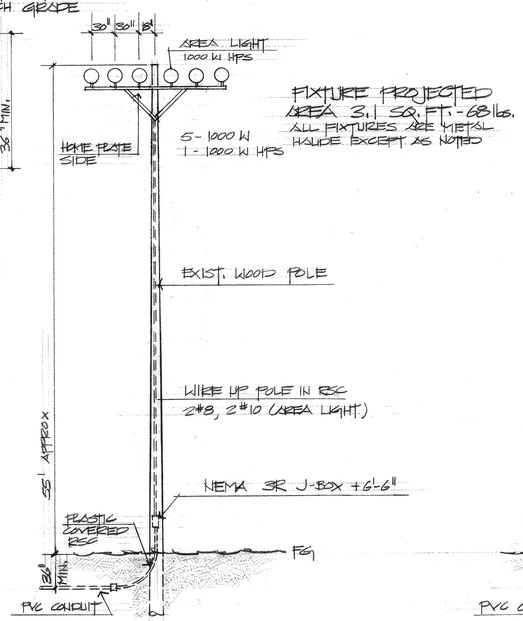

POLE DETAIL A-1 & A-2 (F / E-2)
NTS
FACING A-2 POLE
A-1 POLE REVERSE LIGHTS

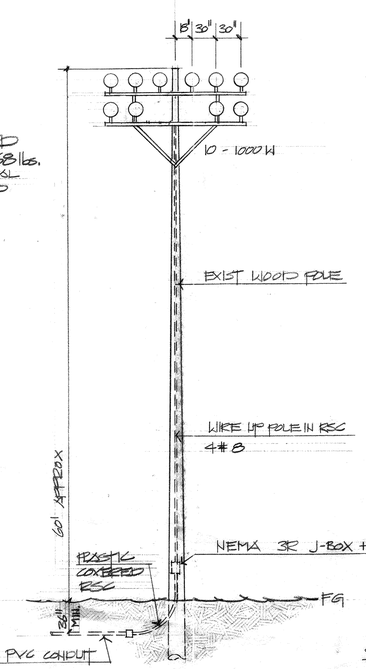

POLE DETAIL B-1 & B-2 (G / E-2)
NTS

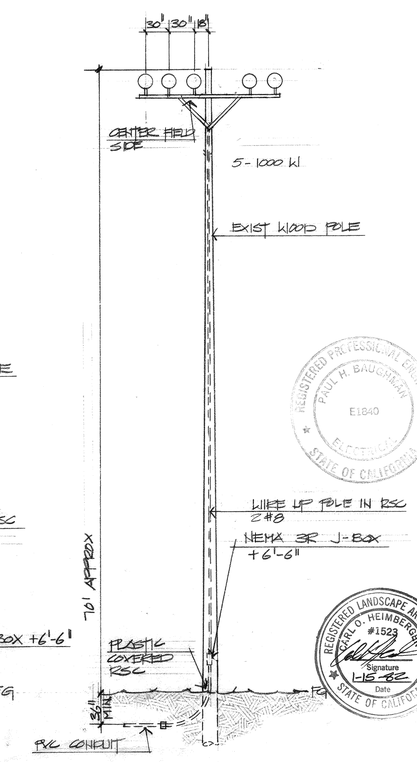

POLE DETAIL C-1, C-2, C-3 & C-4 (H / E-2)
NTS

REGISTERED PROFESSIONAL ENGINEER PAUL H. BAUGHMAN E1840 ELECTRICAL STATE OF CALIFORNIA

REGISTERED LANDSCAPE ARCHITECT CARL O. HEIMBERGER #1529 Signature 1-15-82 Date STATE OF CALIFORNIA

HEIMBERGER·HIRSCH
Landscape Architects·Site & Development Planners
515 W. Commonwealth Ave. Suite 205
Fullerton, Ca. 92632 714·773·0973
AIA

Project;
City of Riverside
Park Improvement Plans for
La Sierra Park and Bryant Park

Paul Baughman
PAUL BAUGHMAN
PE. E-1840

Date; DEC. 5, 1981
Design; BAUGHMAN
Job No; 81023

Description;
LA SIERRA PARK
BALLFIELD LIGHTS

PLAN NO. P0010-A

Sheet
E-2
2 of 2