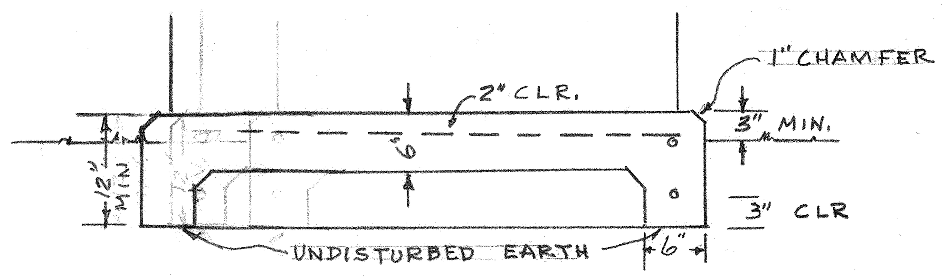

SECTION FOUNDATION

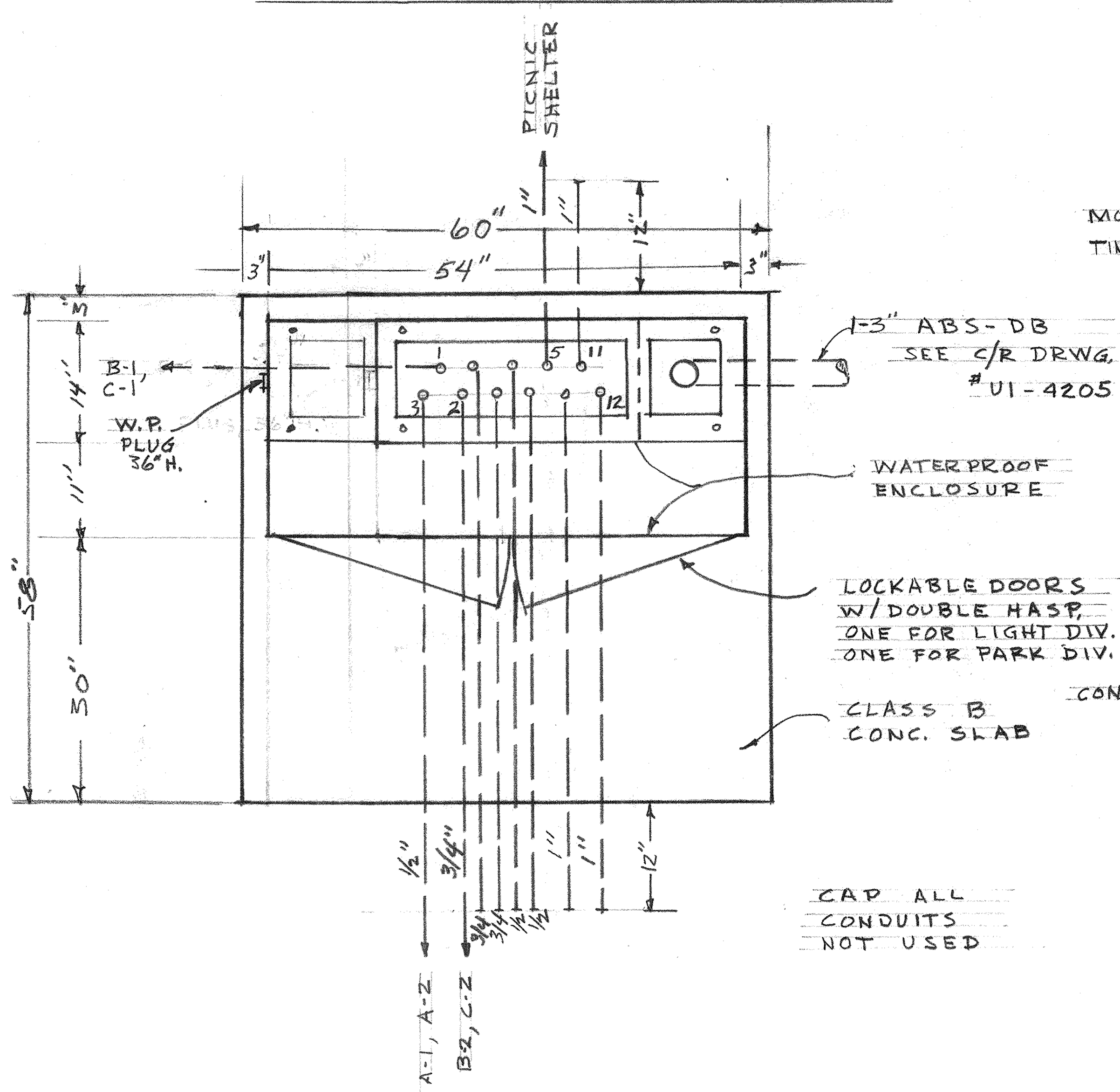

PLAN VIEW

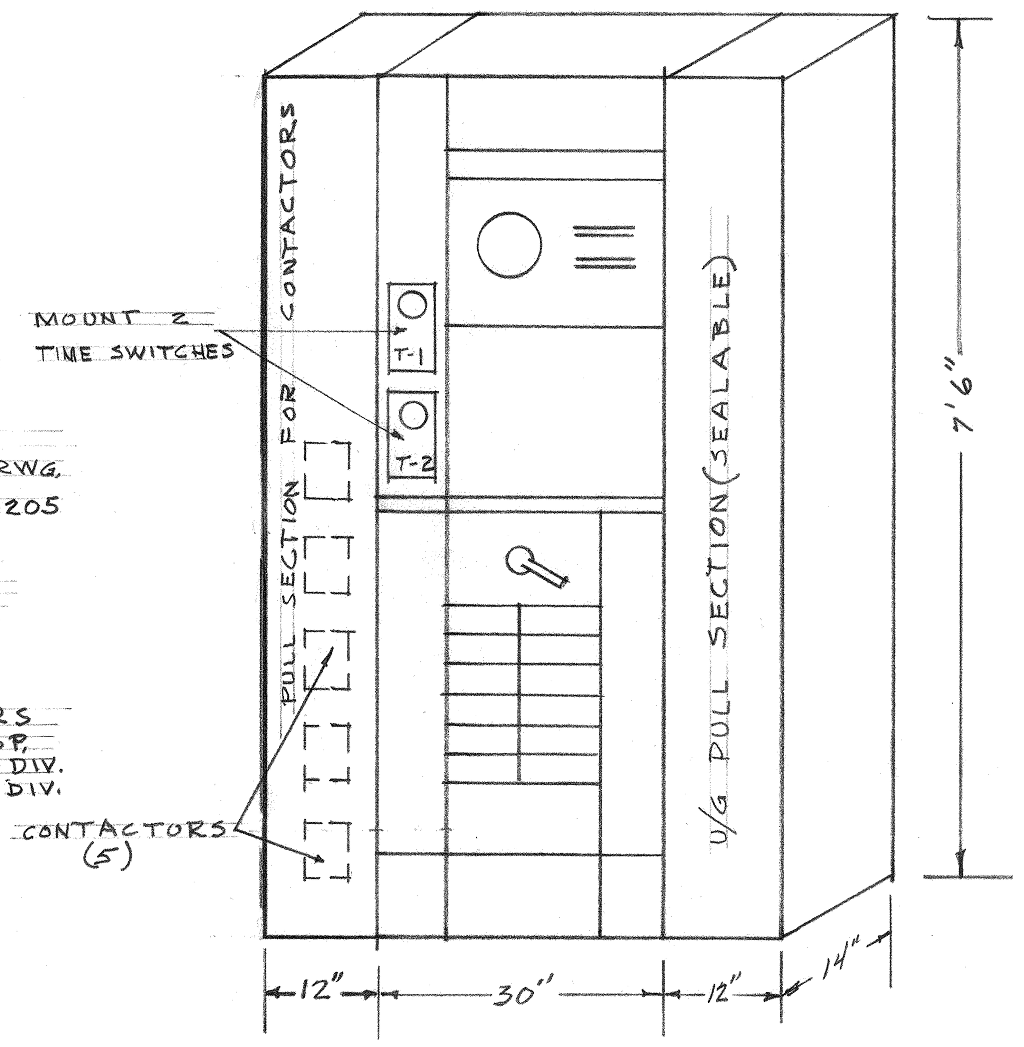

FRONT ELEVATION OF PANEL
ENCLOSURE & SLAB NOT SHOWN

DETAIL SCALE 3/4" = 1'

DETAILS OF WEATHERPROOF MAIN SERVICE AND
DISTRIBUTION SWITCHBOARD INSTALLATION, (SQ. "D" TYPE QMB-MCS, OR EQUAL)

NOTE:
MANUFACTURER OF SWITCHGEAR TO FURNISH THREE (3) DRAWING TO PUBLIC UTILITIES DEPT., 8095 LINCOLN AVE, RIVERSIDE, CALIF. 92504. ATTN. RAY METTE FOR APPROVAL PRIOR TO FABRICATION. LA SIERRA AND JONES PARKS.

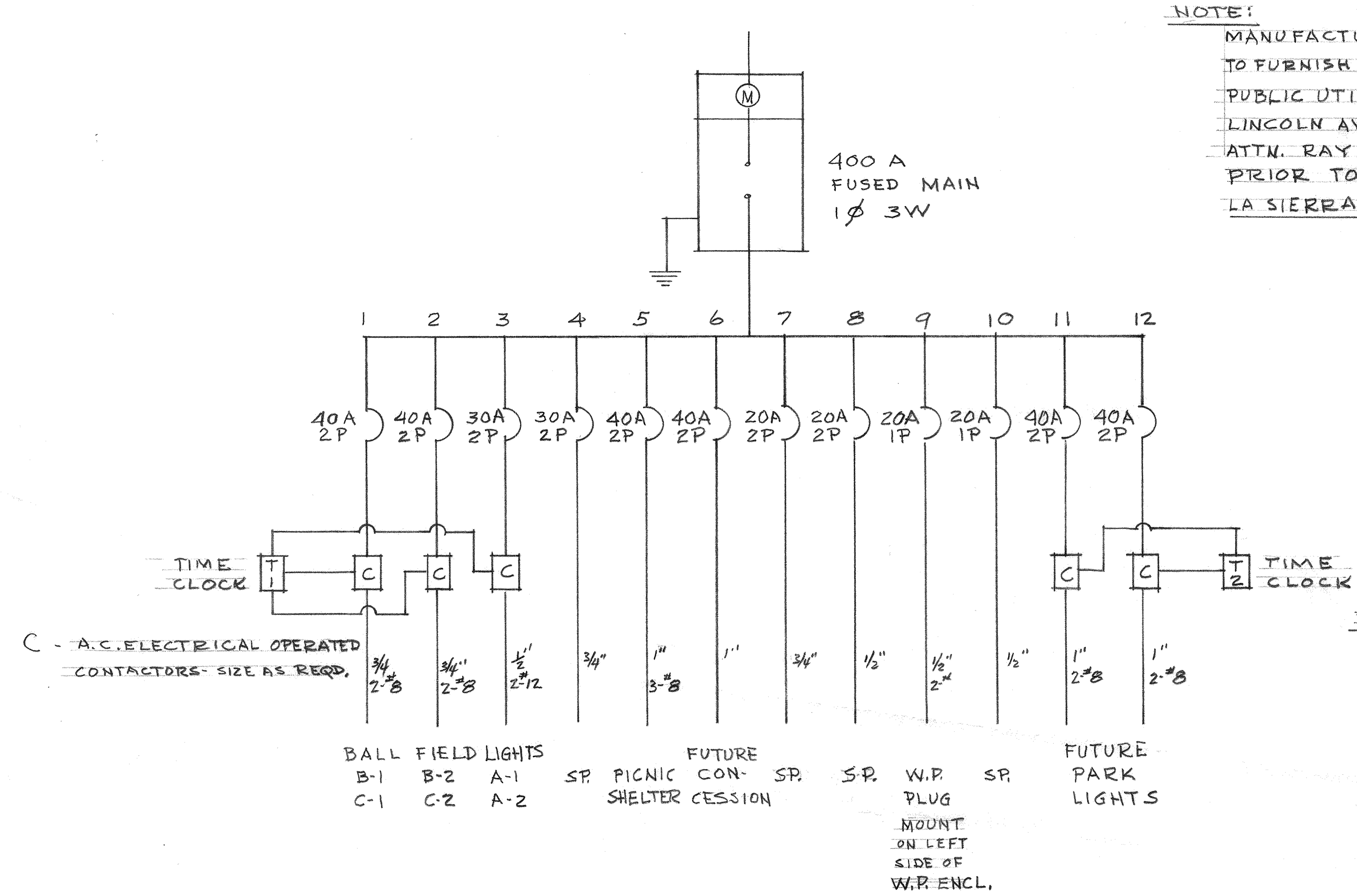

NOTES:
1 - POLE A-1 & A-2 EXISTING, NO CROSSARMS EXIST.
2 - NEW POLES B-1, B-2, C-1, C-2. INSTALL CROSSARMS - 6 POLES.
3 - CONNECT CIRCUIT #5 TO EXIST. PANEL AT PICNIC SHELTER.
4. POLE DETAIL AND C/R DWNG. #U1-4205 U.G. SERV. REQ. IN SPECIFICATIONS.
5. FLOODLIGHTS 16 - STEBER #6506H-1000-240 H
   4 - STEBER #6406H-1000-240 H
   AIMING CHART WILL PROVIDE LOCATIONS
6. LIGHTS TO BE AIMED, OWNER WILL PROVIDE AIMING CHART.
7. ALL WIRING IN DISTRIBUTION PANEL TO BE PROPERLY RACKED AND TIED.
8 TIME CLOCKS FOR 2 & 3 CONTACTORS.

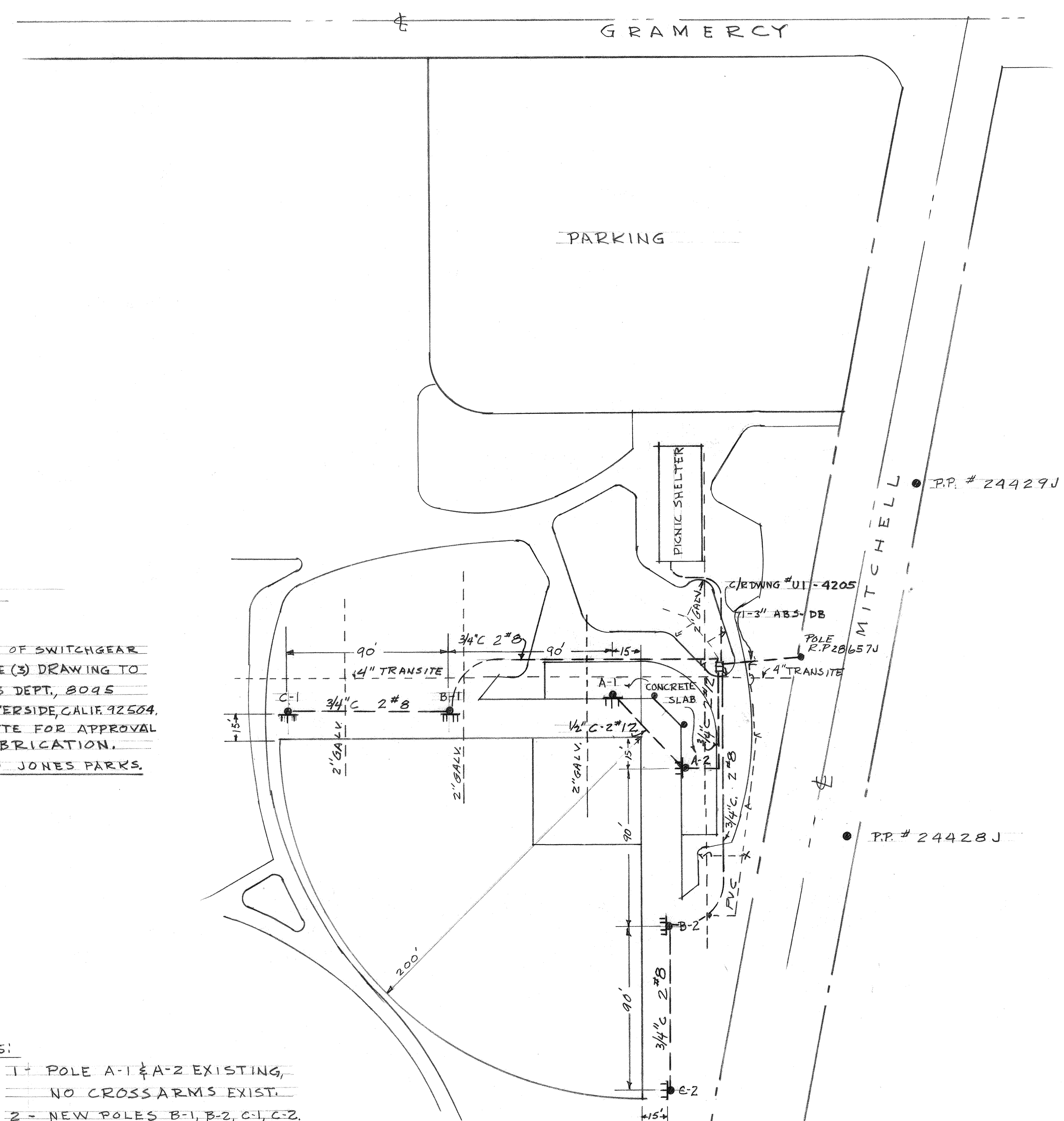

LAYOUT PLAN
SCALE 1" = 40'

LITTLE LEAGUE FIELD
LIGHTING
LA SIERRA PARK
RIVERSIDE, CALIFORNIA
JAN. 20, 1971

REV 2-5-71

P-128-5