150023

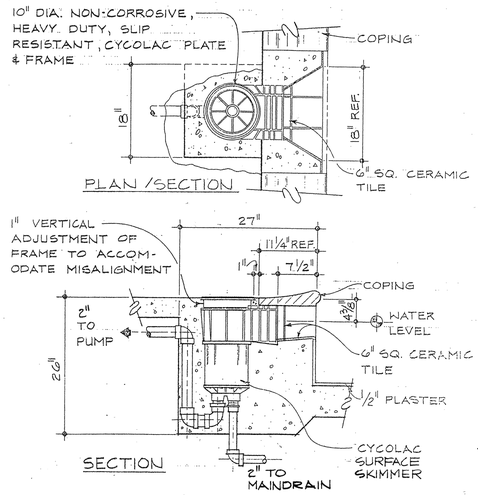


4 / P-2 DETAIL @ WADING POOL SKIMMER

SCALE: 1½" = 1'-0"

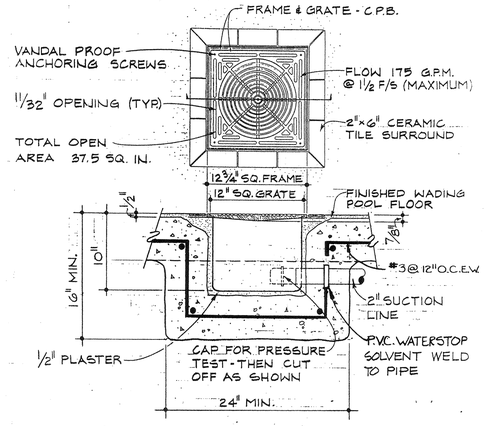


NOTE:
FRAME AND GRATE MUST BE BONDED. SEE DETAIL 4/E-2

3 / P-2 DETAIL @ WADING POOL MAIN DRAIN

SCALE: 1½" = 1'-0"

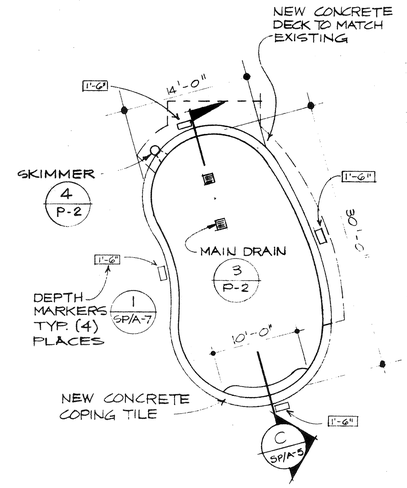


## POOL STATISTICS

| | |
|---|---|
| **DIMENSIONS** | **WADING POOL** |
| OVERALL LENGTH | 30' |
| OVERALL WIDTH | 14' |
| PERIMETER | 80' |
| SURFACE AREA | 420 SQ FT |
| DEPTHS | 1'-0", 1'-6" |
| VOLUME | 525 CU FT |
| TOTAL GALLONS | 4,000 GAL |
| BATHING LOAD - 1/20 SQ FT | 21 |
| **LIGHTING** | |
| NUMBER OF LIGHTS | NONE |
| WATTAGE PER LIGHT | |
| WATTAGE PER SQ FT | |
| WATTAGE TOTAL | |
| **FILTERS** | |
| FILTER AREA | EXISTING |
| FILTER FLOW RATE | |
| TURNOVER | |
| FILTER TYPE | |
| BACKWASH RATE | |
| BACKWASH VALVE | |
| **PUMP** | |
| FILTER PUMP | EXISTING |

WADING POOL CONSTRUCTION PLAN

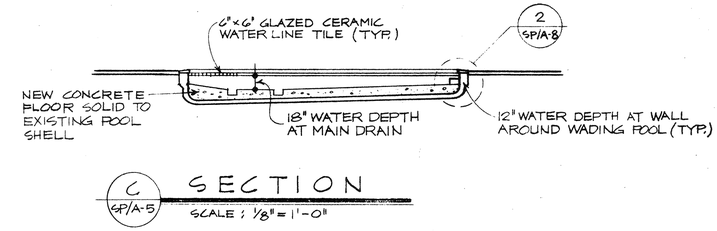


C / SP/A-5 SECTION

SCALE: ⅛" = 1'-0"

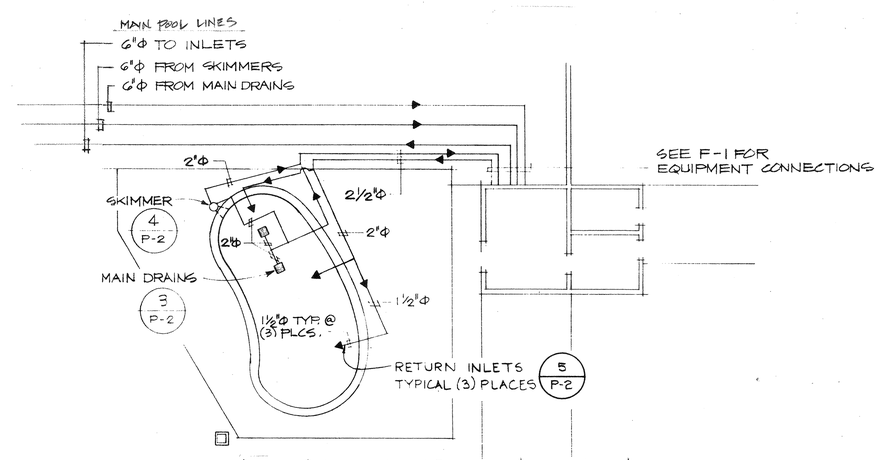


WADING POOL PLUMBING PLAN

NOTE: ALL INFORMATION SHOWN ABOVE IS 'AS-BUILT' PER ROWLEY INTERNATIONAL, INC. CONTRACTOR SHALL FIELD VERIFY ALL DATA & SHALL DESIGN & CONSTRUCT ANY & ALL IMPROVEMENTS NEEDED FOR RETRO-FIT OF THE WADING POOL TO COMPLY WITH CURRENT CODE REQUIREMENTS FOR THE MAIN DRAINS AND PIPING SYSTEMS, ALL TO EFFECT COMPLIANCE W/ SB 873 PER THE SPECIFICATIONS. CONTRACTOR TO OBTAIN PERMITS, INSPECTIONS & APPROVAL OF RIVERSIDE COUNTY DEPARTMENT OF ENVIRONMENTAL HEALTH.

ISLANDER PARK WADING POOL REFERENCE PLAN

NOTE: ALL INFORMATION THIS SHEET IS TAKEN FROM 'AS BUILT' RECORD DRAWINGS PATRIC MAY 1987 AS PREPARED BY ROWLEY INTERNATIONAL INC.


city of riverside
park & recreation department
(714) 782-5223
3900 MAIN ST RIVERSIDE, CALIFORNIA 92522


| revisions | by |
|---|---|
| | |

| | |
|---|---|
| date 7/12/99 | |
| design | |
| drawn | |
| check | |
| acc't.no. | |
| SHEET ONE of ONE | |