1. LA SIERRA PARK
   9205 LA SIERRA AVENUE
   RIVERSIDE, CA 92503
2. HUNT PARK
   4015 JACKSON STREET
   RIVERSIDE, CA 92503
3. JONES PARK
   3995 JEFFERSON STREET
   RIVERSIDE, CA 92504
4. SHAMEL PARK
   3050 ARLINGTON AVENUE
   RIVERSIDE, CA 92506
5. PARK & REC. DEPT. - PLANNING & DESIGN SECTION
   2225 MARKET STREET
   RIVERSIDE, CA 92501
6. CITY HALL - PARK & REC. DEPT. ADMIN.
   3900 MAIN STREET
   RIVERSIDE, CA 92522

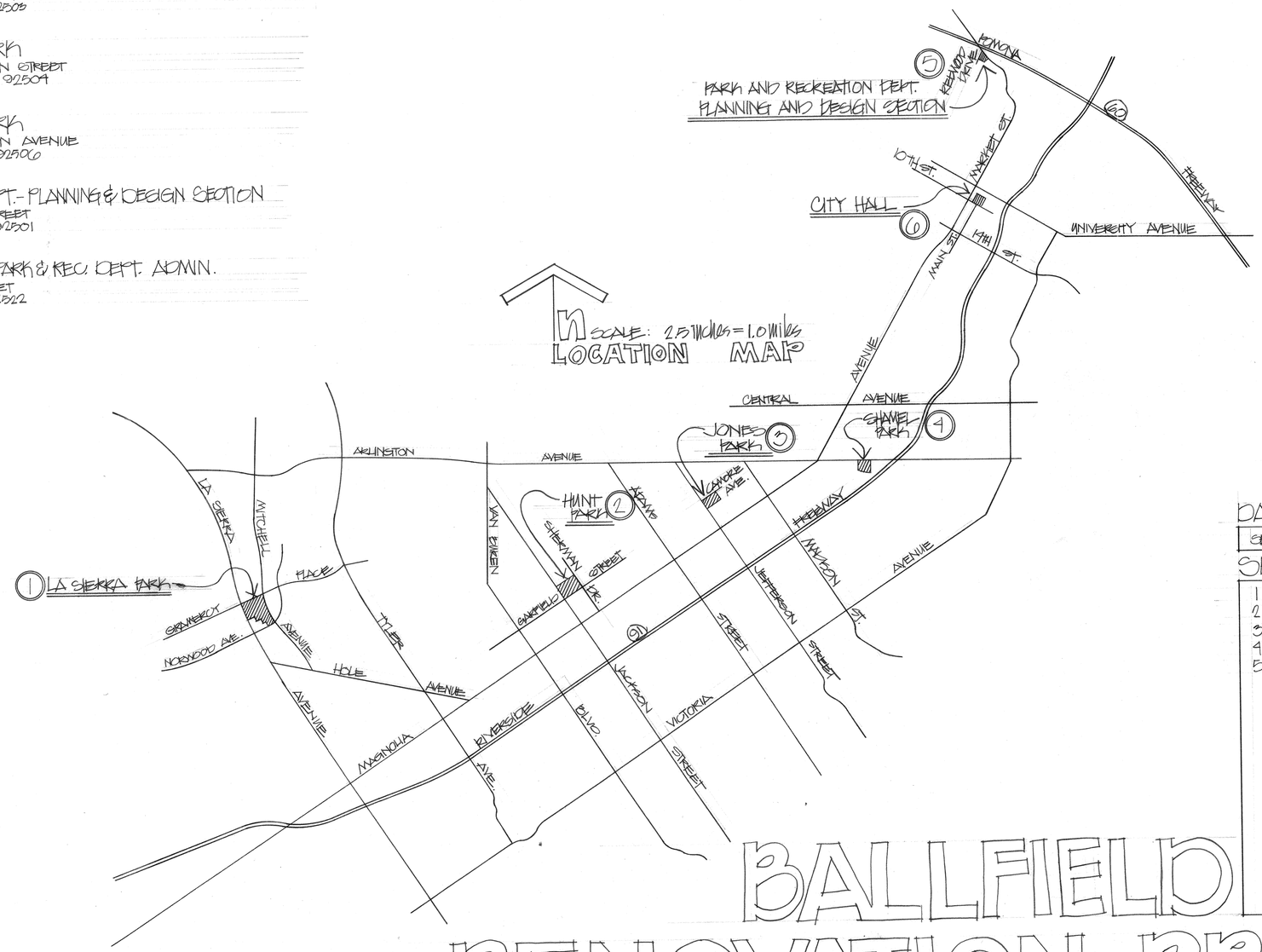

DATE
SEPTEMBER 25, 1979

SHEET INDEX
1 BALLFIELD LOCATION PLAN
2 DEMOLITION PLAN
3 RENOVATION PLAN
4 DETAILS
5 DETAILS

CITY OF RIVERSIDE
PARK AND RECREATION DEPARTMENT
3900 MAIN STREET · RIVERSIDE, CA 92522

BALLFIELD RENOVATION PROJECT

REFURBISHMENT PROGRAM

1979-80 CAPITAL IMPROVEMENT PROGRAM

P-127-6

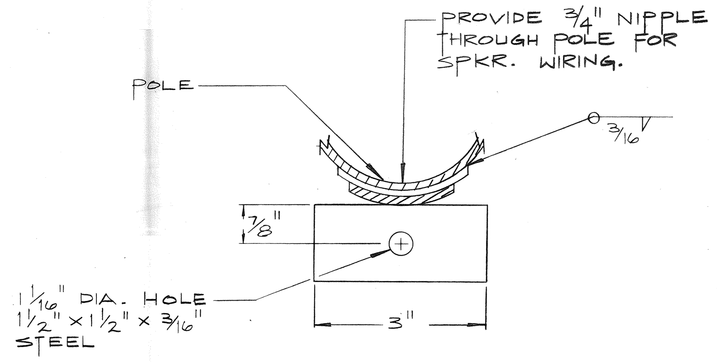

1/— SPEAKER MTG. BRACKET
N.T.S.

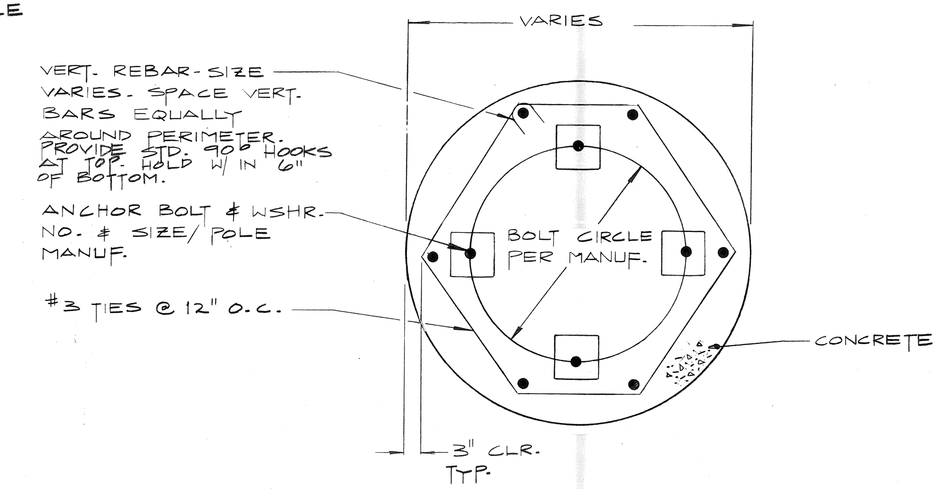

2/— FOUNDATION SECTION
N.T.S.

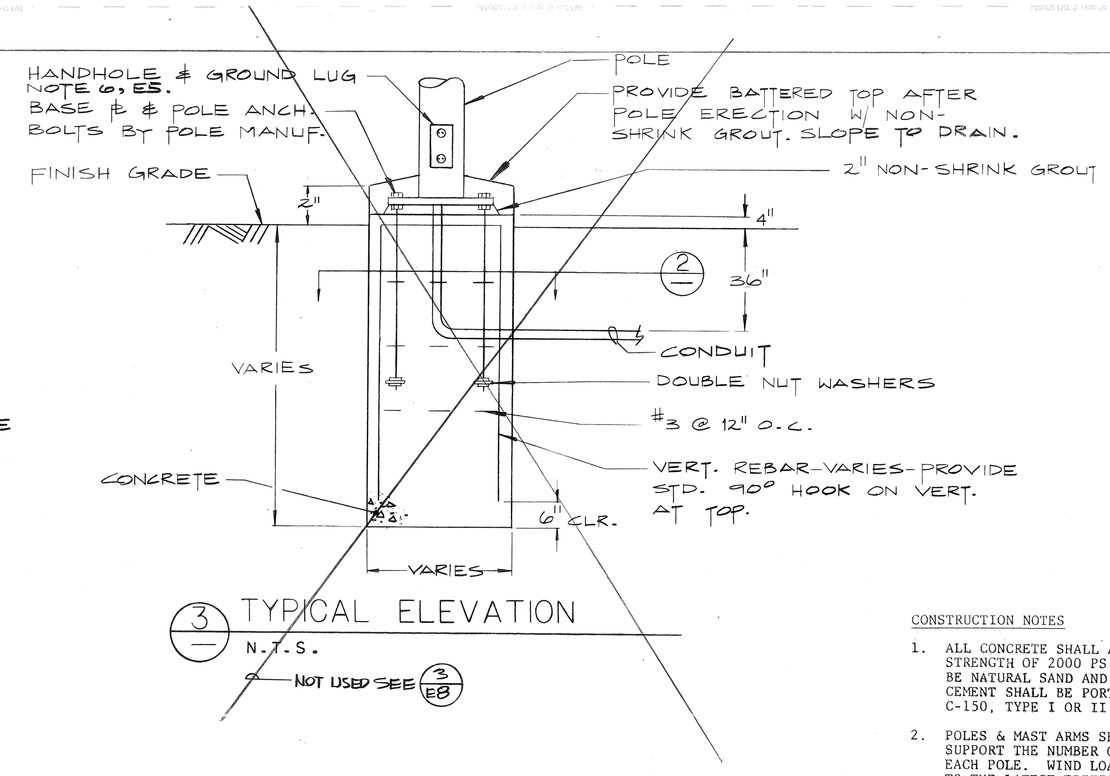

3/— TYPICAL ELEVATION
N.T.S.
NOT USED SEE 3/E8

CONSTRUCTION NOTES

1. ALL CONCRETE SHALL ATTAIN A MINIMUM COMPRESSIVE STRENGTH OF 2000 PS; AT 28 DAYS. AGGREGATES SHALL BE NATURAL SAND AND ROCK CONFORMING TO ASTM C-33, CEMENT SHALL BE PORTLAND CEMENT CONFORMING TO ASTM C-150, TYPE I OR II, LOW ALKALI.
2. POLES & MAST ARMS SHALL BE DESIGNED TO STRUCTURALLY SUPPORT THE NUMBER OF LUMINARIES CALLED FOR ON EACH POLE. WIND LOADING & POLE DESIGN SHALL CONFORM TO THE LATEST EDITION OF THE UNIFORM BUILDING CODE. MANUFACTURER SHALL SUPPLY CALCULATIONS & SHOP DWGS. FOR APPROVAL PRIOR TO FABRICATION. ALL CALCULATIONS SHALL BE SIGNED BY A CALIFORNIA REGISTERED PROFESSIONAL ENGINEER.
3. REINFORCING STEEL SHALL CONFORM TO ASTM A615, GRADE 40 FOR SIZES #3 & #4 AND GRADE GO FOR SIZES #5 AND LARGER.
4. DUE TO LOCAL SOIL CONDITIONS IT MAY BE NECESSARY TO PROVIDE CASINGS FOR THE CONCRETE FOOTINGS. IN SUCH CASES, USE METAL CASINGS OR "SONO TUBE" TYPE CASINGS.
5. ALL EXCAVATIONS ARE TO BE INSPECTED AND APPROVED BY A SOILS ENGINEER PRIOR TO THE PLACEMENT OF ANY CONCRETE OR REINFORCING STEEL.
6. ALL SOILS WORK SHALL BE ACCOMPLISHED AND PERFORMED IN ACCORDANCE WITH THE SOILS REPORT AS PREPARED BY SLADDEN ENGINEERING DATED AUGUST 29, 1978 FILE # 444-8141.

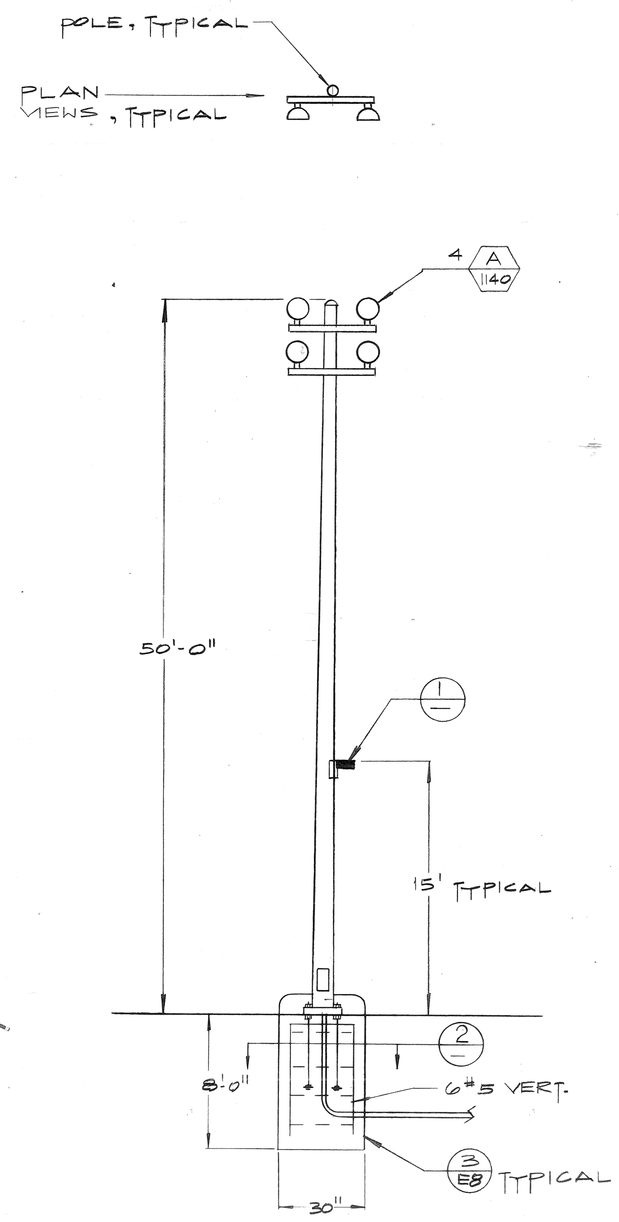

4/— DETAIL, POLE "A1" & "A2"
N.T.S.

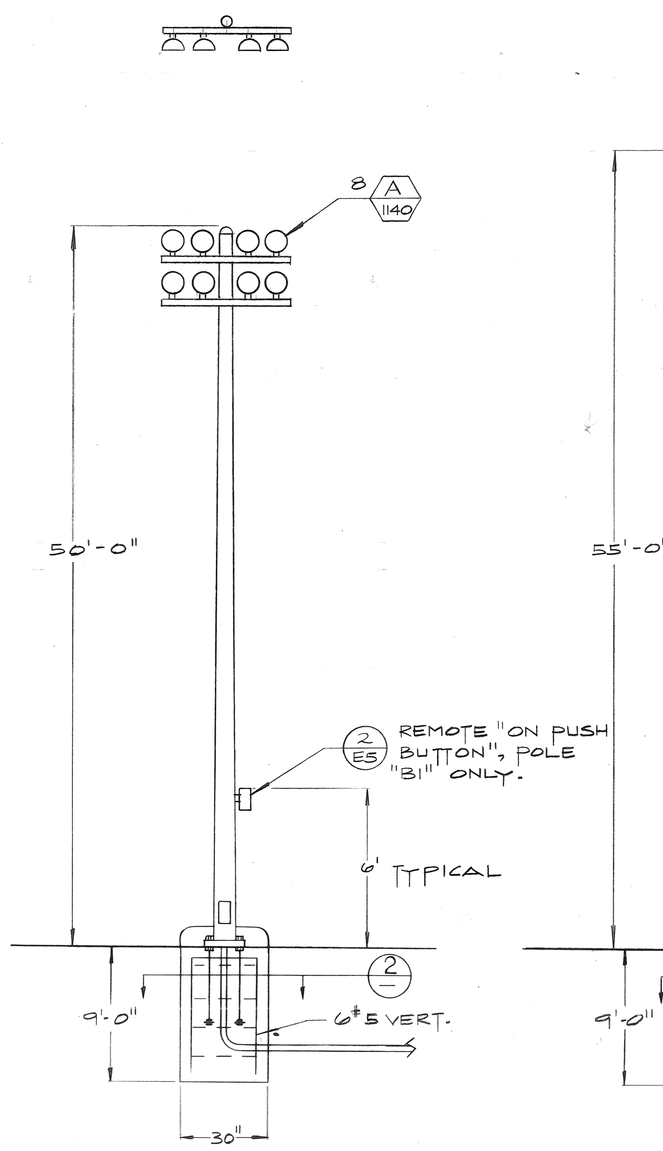

5/— DETAIL, POLE "B1" & "B2"
N.T.S.

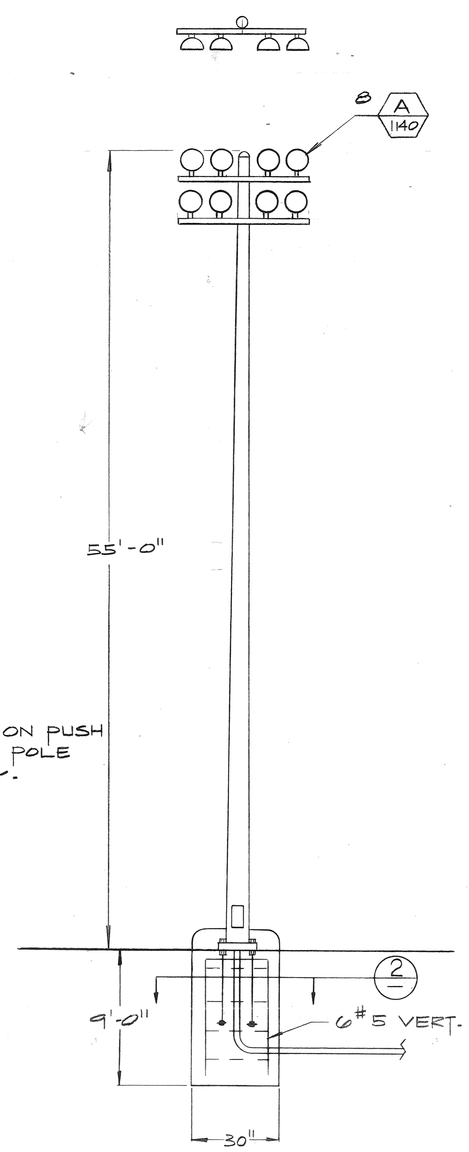

6/— DETAIL, POLE "C1" & "C2"
N.T.S.

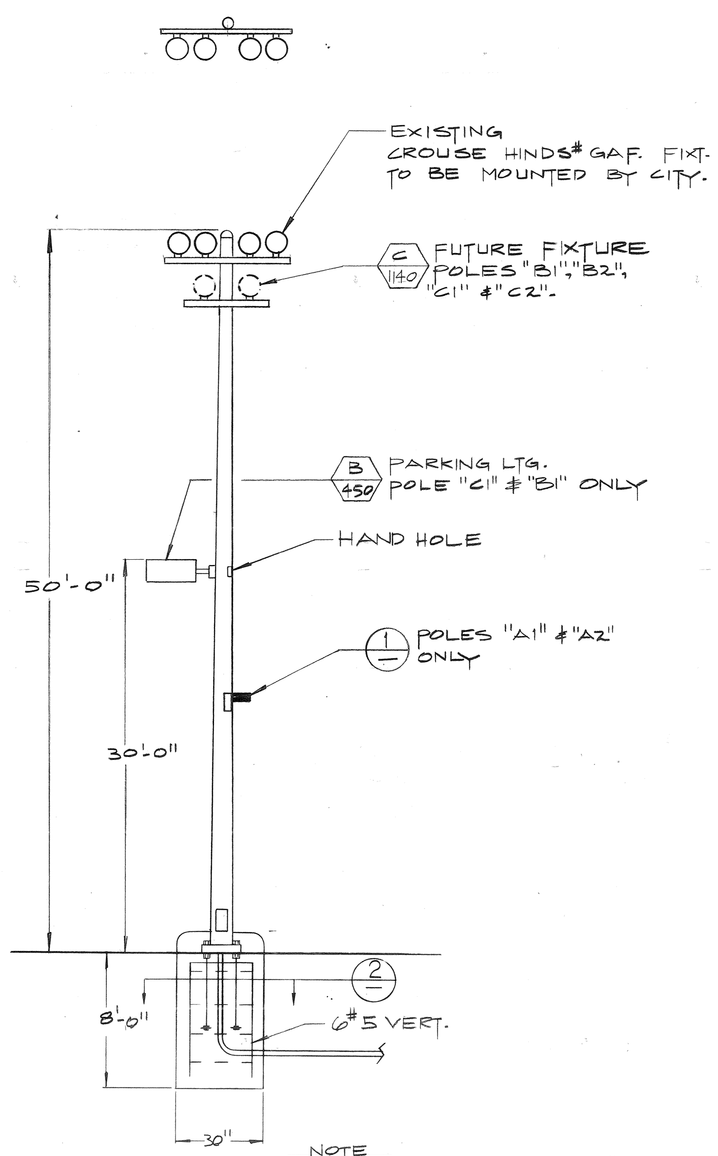

NOTE
"HUNT PARK ONLY"

7/— DETAIL, POLE "A1", "A2", "B1", "B2", "C1" & "C2"
N.T.S.

P-128-47

MULLEN & ASSOCIATES INC.
CONSULTING ENGINEERS
1940 N. TUSTIN AVE., SUITE 113
ORANGE, CALIFORNIA 92665/714-637-6621

REGISTERED PROFESSIONAL ENGINEER 5-24-83 LARRY D. MULLEN ELECTRICAL STATE OF CALIFORNIA

RIVERSIDE PARK LIGHTING
CITY OF RIVERSIDE

ELECTRICAL POLE DETAILS JOB # 7991
LA SIERRA & REID FIELD #1 & HUNT PARK

REVISIONS

SHEET E 7 OF 8

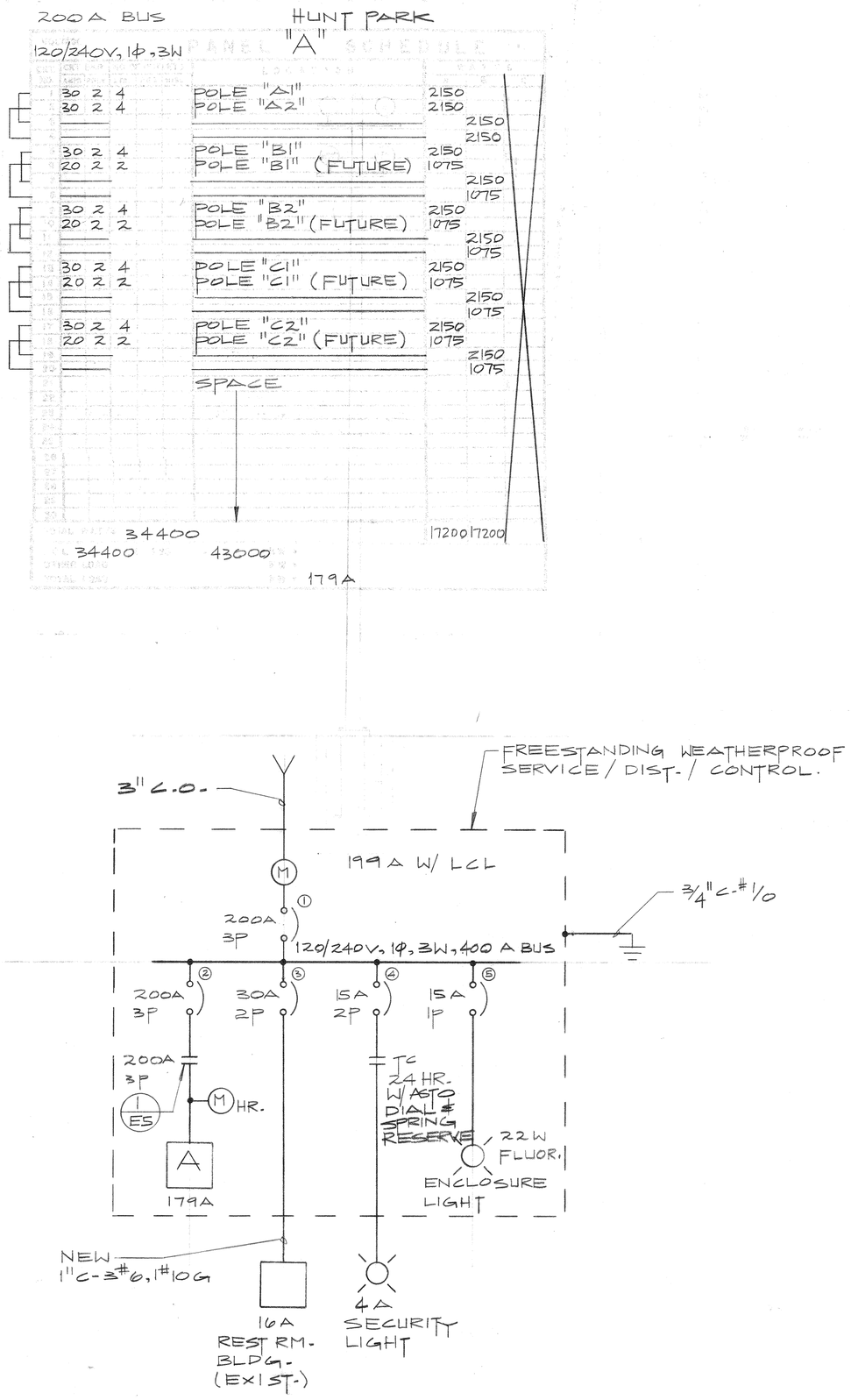

1 1-LINE DIAGRAM (HUNT PARK)

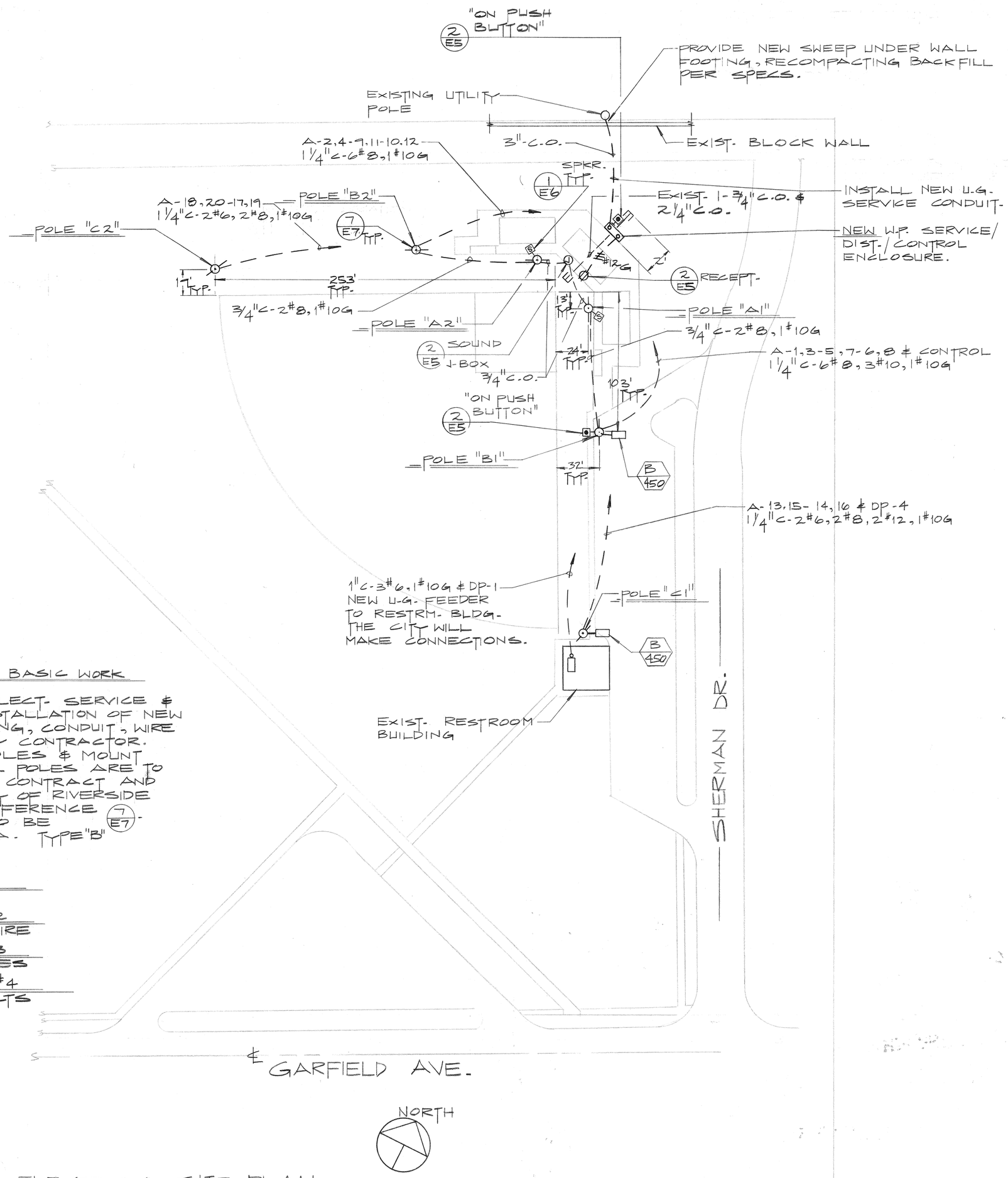

NOTE: BASIC WORK

CITY TO REMOVE EXIST. ELECT. SERVICE & WOOD POLE SYSTEM. INSTALLATION OF NEW SERVICE PANEL, TRENCHING, CONDUIT, WIRE AND FOOTINGS TO BE BY CONTRACTOR. THE CITY WILL ERECT POLES & MOUNT FIXTURES. NEW STEEL POLES ARE TO BE PROVIDED ON THIS CONTRACT AND DELIVERED TO THE CITY OF RIVERSIDE PARK MAINT. YARD REFERENCE 7 E7. FIXTURES ARE EXIST. TO BE REUSED. EXCEPT 2 EA. TYPE "B" B 450 ARE NEW.

DEDUCTIVE ALTERNATE #1
SWITCH GEAR & PAD

DEDUCTIVE ALTERNATE #2
TRENCHING, CONDUIT & WIRE

DEDUCTIVE ALTERNATE #3
POLES & TYPE "B" FIXTURES

DEDUCTIVE ALTERNATE #4
FOOTINGS & ANCHOR BOLTS

A ELECTRICAL SITE PLAN
SCALE: 1" = 40'-0"

0 20' 40' 80'

P-128-44

MULLEN & ASSOCIATES INC.
CONSULTING ENGINEERS
1940 N. TUSTIN AVE., SUITE 113
ORANGE, CALIFORNIA 92665/714-637-6621

REGISTERED PROFESSIONAL ENGINEER 3-24-80 LARRY D. MULLEN E 8279 ELECTRICAL STATE OF CALIFORNIA

RIVERSIDE PARK LIGHTING
CITY OF RIVERSIDE

HUNT PARK ELECTRICAL PLAN

JOB# 7991

REVISIONS

SHEET E 3 OF 8

(1) LA SIERRA PARK
5205 LA SIERRA AVE.
RIVERSIDE, CA. 92505

(2) HUNT PARK
4015 JACKSON ST.
RIVERSIDE, CA 92503

(3) SHAMEL PARK
3650 ARLINGTON AVE.
RIVERSIDE, CA. 92506

(4) REID PARK
801 ORANGE ST.
RIVERSIDE, CA. 92501

PARK & REC. DEPT.-PLANNING & DESIGN SECTION
2225 MARKET ST.
RIVERSIDE, CA. 92501

CITY HALL-PARK & REC. DEPT. ADMIN.
3900 MAIN ST.
RIVERSIDE, CA. 92522

MULBERRY YARD
CITY MAINTENANCE YARD
10TH. & VINE STREETS
RIVERSIDE, CA. 92507

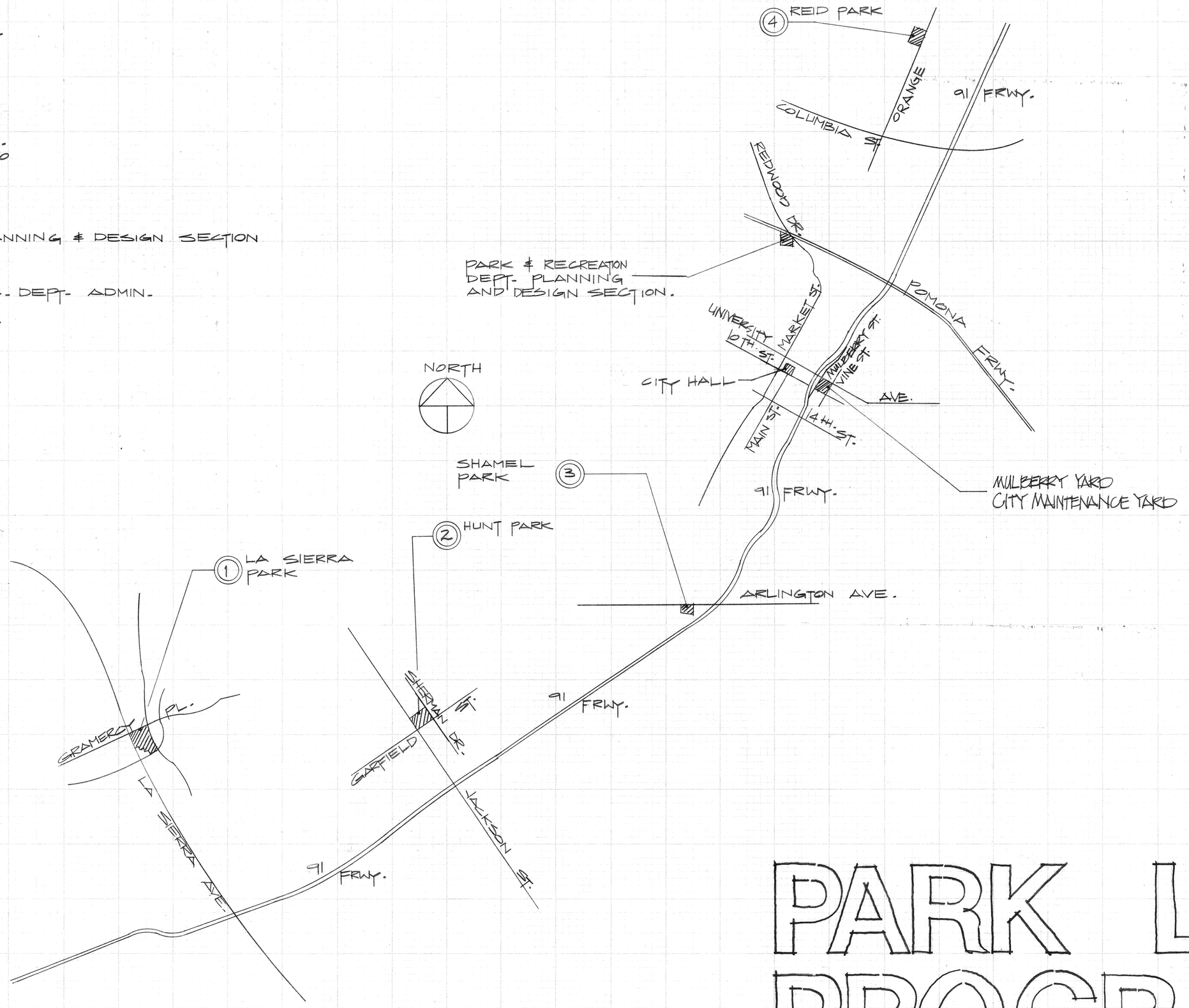

SHEET INDEX	
E1	LOCATION PLAN
E2	LA SIERRA PARK ELECTRICAL SITE PLAN
E3	HUNT PARK ELECTRICAL SITE PLAN
E4	SHAMEL PARK ELECTRICAL SITE PLAN
E5	ELECTRICAL DETAILS
E6	REID PARK ELECTRICAL SITE PARK
E7	ELECTRICAL POLE DETAILS
E8	ELECTRICAL POLE DETAILS

NOTE: ALL ELECTRIC SERVICE FACILITIES AND OVERHEAD TO UNDERGROUND ELECTRIC DISTRIBUTION CONVERSION FACILITIES TO BE PROVIDED AND INSTALLED IN ACCORDANCE WITH CITY OF RIVERSIDE, PUBLIC UTILITY DEPARTMENT PLANS, STANDARDS, AND SPECIFICATIONS. ALL SERVICE AND CONVERSION FEES ARE TO BE DETERMINED BY, AND SHALL BE IN ACCORDANCE WITH, PUBLIC UTILITY DEPARTMENT ELECTRIC RULES AND REGULATIONS.

PARK LIGHTING PROGRAM

approvals

Ed Brown	4/2/80
DIRECTOR, PARK AND RECREATION DEPARTMENT	
W/ Bachman	4/2/80
PARKS SUPERINTENDANT	DATE
Robert R Johnson	4/2/80
PARK PROJECTS COORDINATOR	DATE
CHIEF PUBLIC WORKS ENGINEER	DATE
P B Poplin	4-9-80
FOR CHIEF UTILITY ENGINEER (ELECTRIC)	DATE
BUILDING INSPECTION SUPERVISOR	DATE

:P-128-42

MULLEN & ASSOCIATES INC.
CONSULTING ENGINEERS
1940 N. TUSTIN AVE., SUITE 113
ORANGE, CALIFORNIA 92665/714-637-6621

REGISTERED PROFESSIONAL ENGINEER
4-24-80
LARRY E. MULLEN
NO. 8700
ELECTRICAL
STATE OF CALIFORNIA

RIVERSIDE PARK LIGHTING
CITY OF RIVERSIDE

ELECTRICAL

JOB # 7991

REVISIONS

SHEET
E 1
OF 8

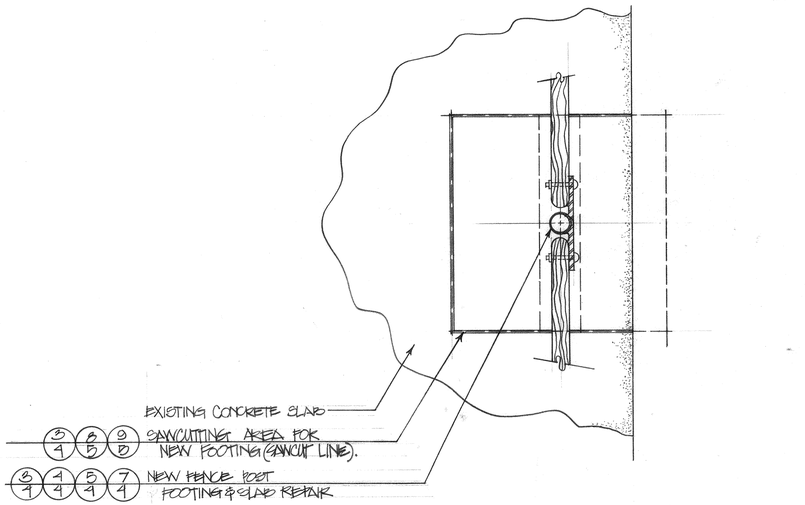

10/B TYP. BACKSTOP CONCRETE SAWCUTTING & NEW C.L.F. FENCE POST INSTALLATION 1½"=1'-0"

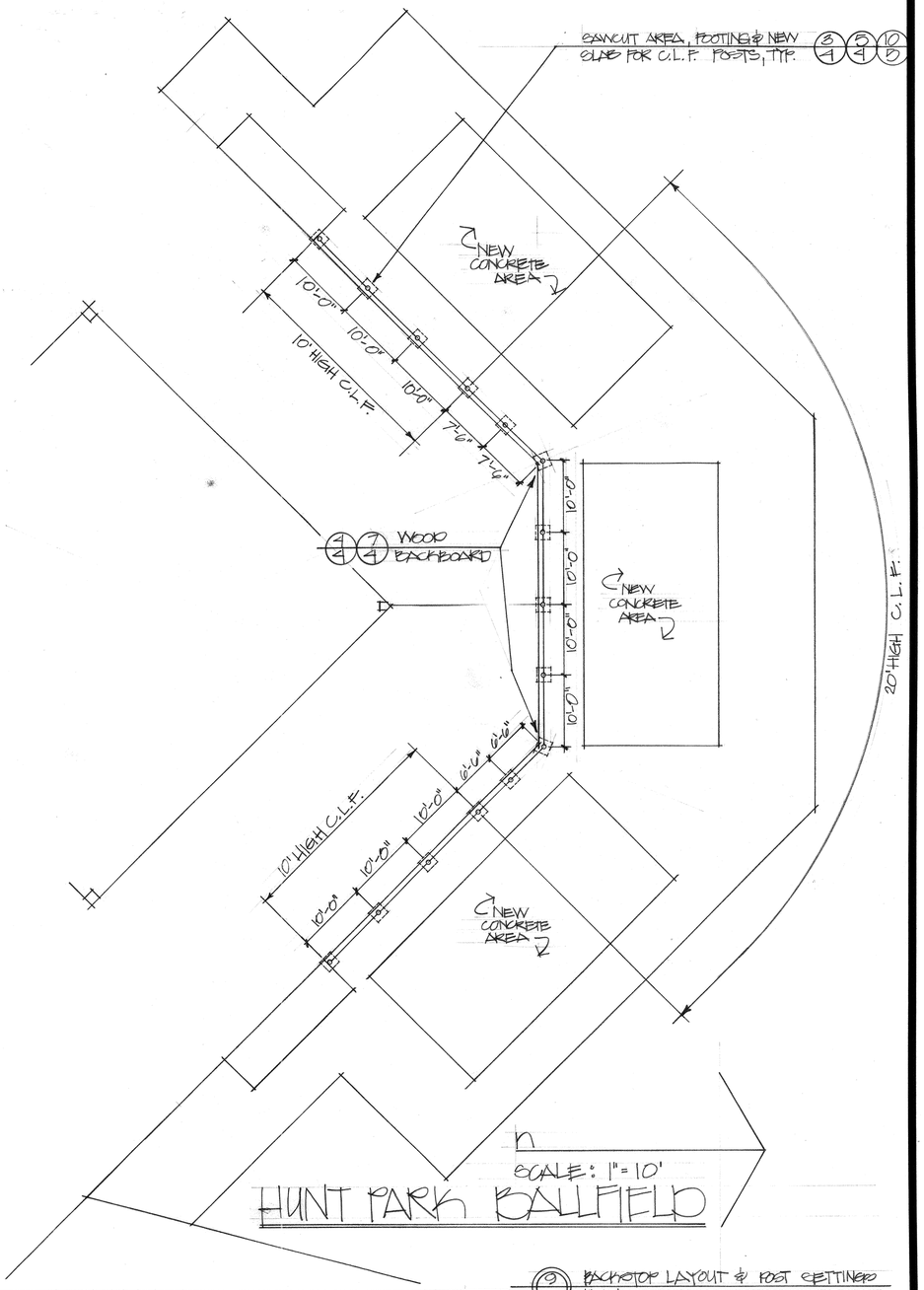

9/B BACKSTOP LAYOUT & POST SETTINGS 1"=10'

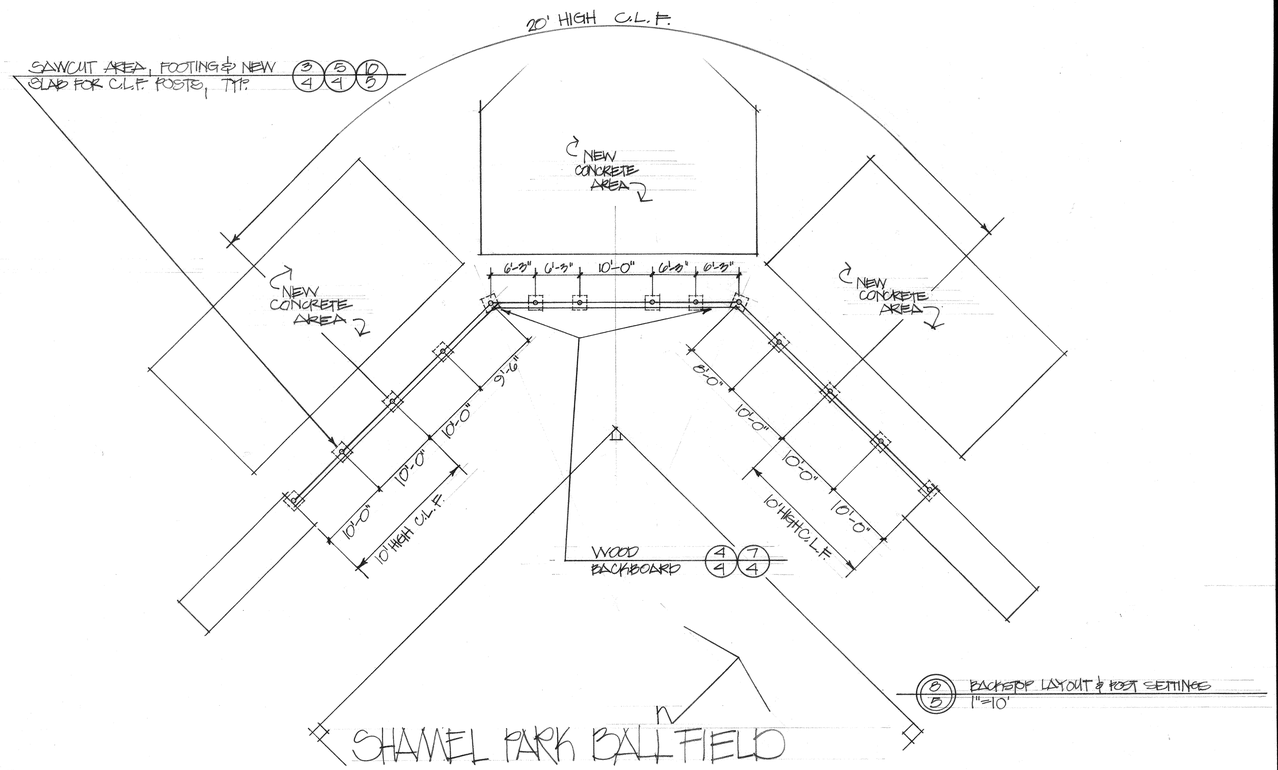

8/B BACKSTOP LAYOUT & POST SETTINGS 1"=10'

BALLFIELD RENOVATION PROJECT

DETAILS SHEET

CITY OF RIVERSIDE
PARK AND RECREATION DEPARTMENT
REFURBISHMENT PROGRAM
1979-80 CAPITAL IMPROVEMENT PROGRAM

RIL SEPT. 1, '79

P-127-10

SHEET 5

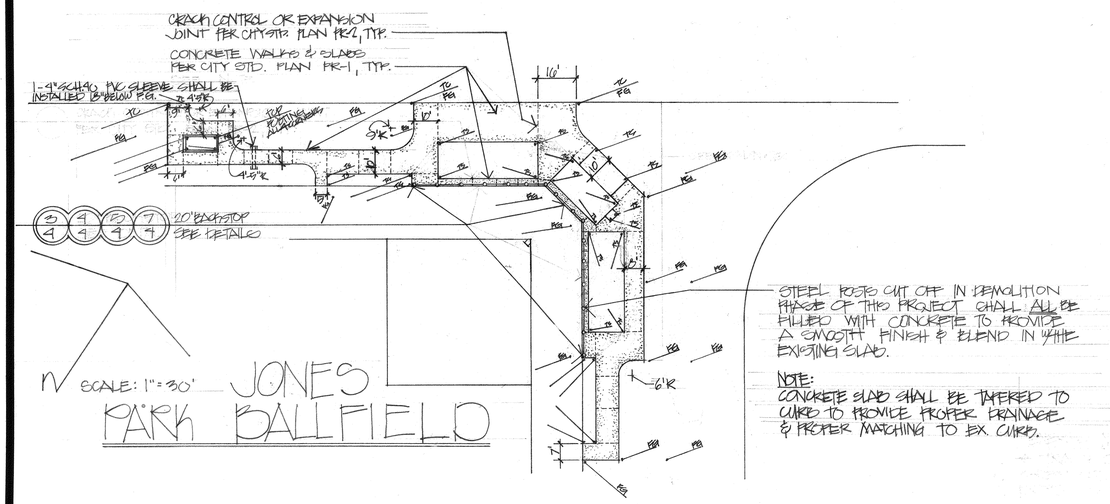

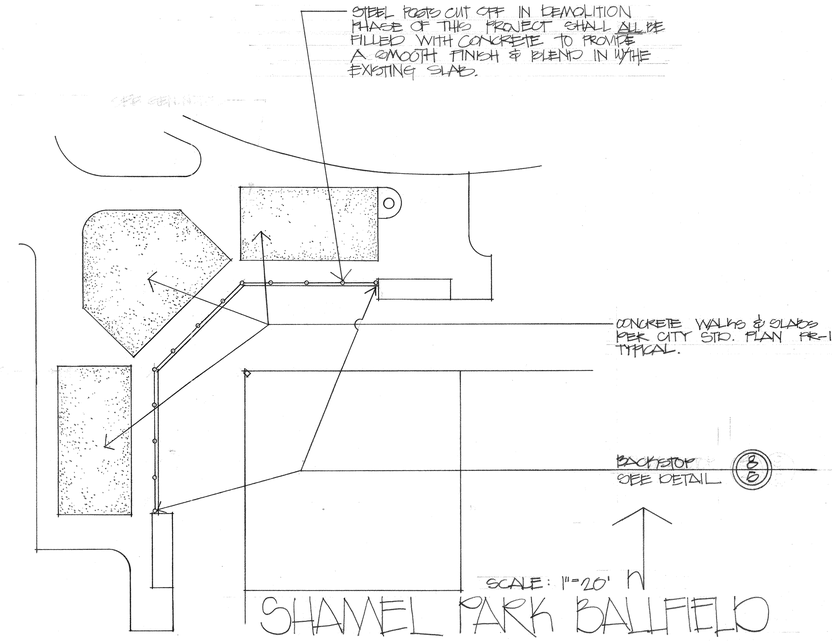

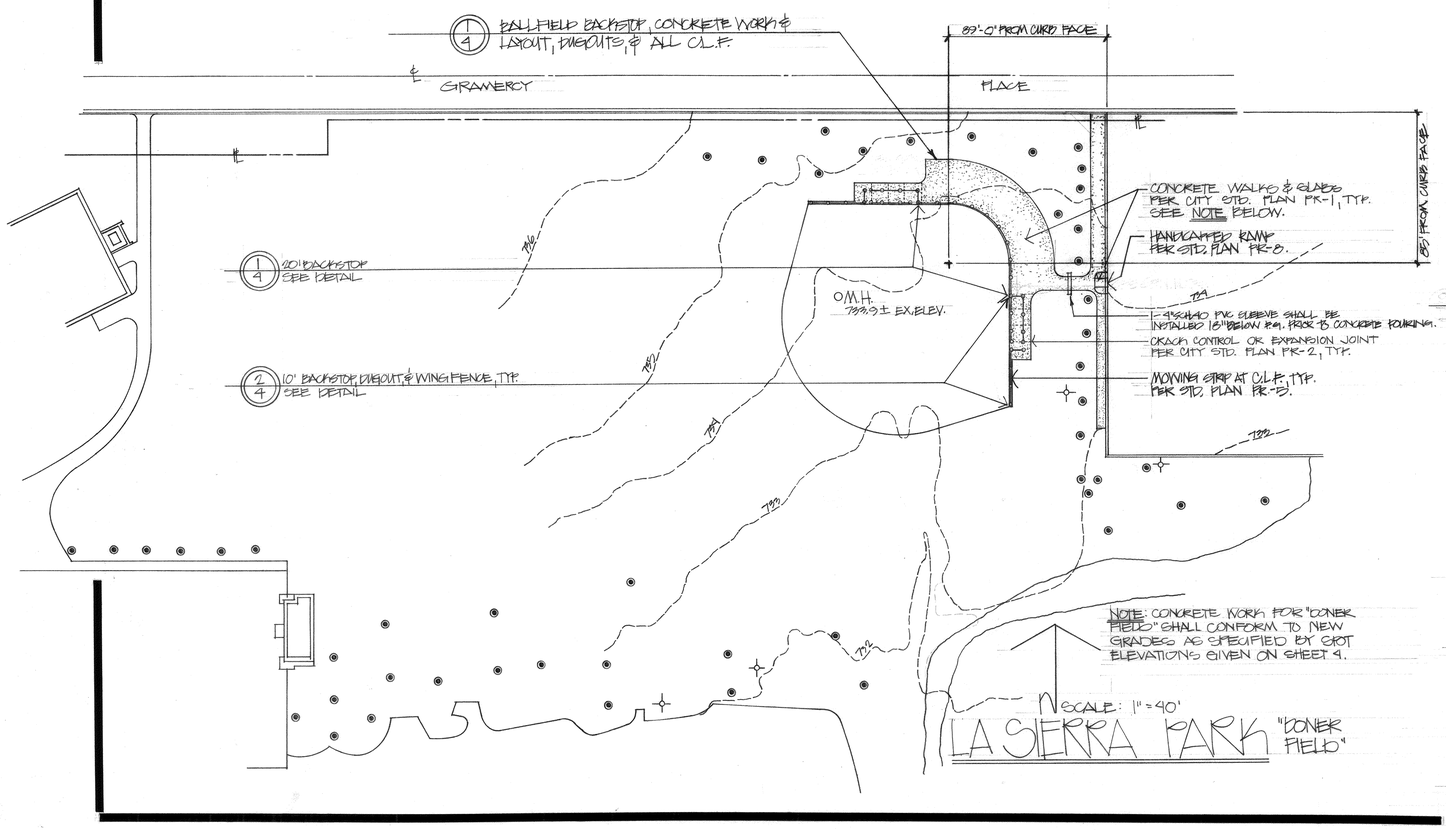

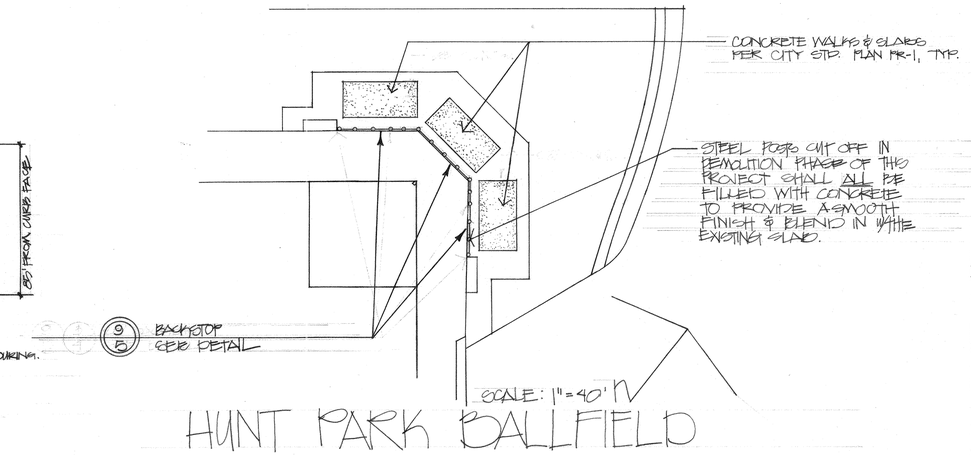

BALLFIELD RENOVATION PROJECT

CITY OF RIVERSIDE
PARK AND RECREATION DEPARTMENT
REFURBISHMENT PROGRAM
1979-80 CAPITAL IMPROVEMENT PROGRAM

RENOVATION PLAN

RIL SEPT, '79

P-127-8

SHEET 3

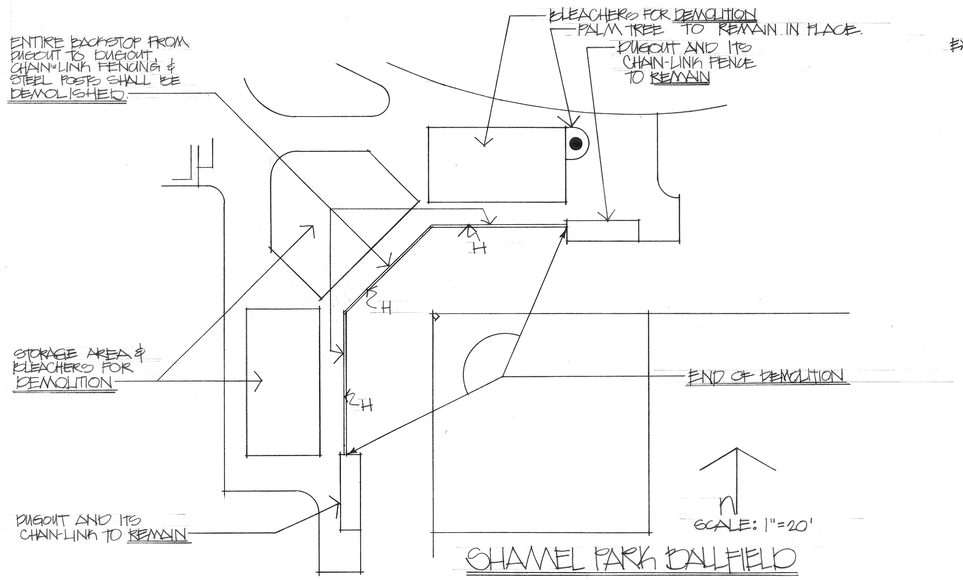

CHAMEL PARK BALLFIELD

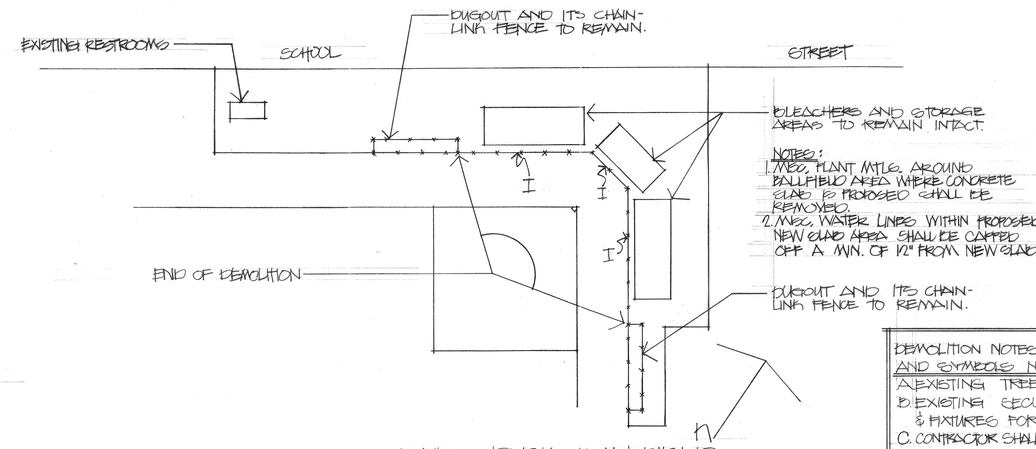

NOTES:
1. MISC. PLANT MTLS. AROUND BALLFIELD AREA WHERE CONCRETE SLAB IS PROPOSED SHALL BE REMOVED.
2. MISC. WATER LINES WITHIN PROPOSED NEW SLAB AREA SHALL BE CAPPED OFF A MIN. OF 12" FROM NEW SLAB.

JONES PARK BALLFIELD

DEMOLITION NOTES, ABBREVIATIONS AND SYMBOLS NOTES.

A. EXISTING TREES FOR DEMOLITION.
B. EXISTING SECURITY LIGHT STANDARDS & FIXTURES FOR DEMOLITION.
C. CONTRACTOR SHALL SALVAGE ALL PLAY EQUIPMENT APPARATUS. APPARATUS SHALL BE PROTECTED AND REMOVED FROM PARK SITE & CONTRACTOR SHALL BE RESPONSIBLE FOR ITS DELIVERY TO THE MULBERRY CITY YARD AT 10TH & VINE STREETS FOR PROPER STORAGE AS APPROVED BY INSPECTOR.
D. D.G. FROM PLAY AREA & WALKWAY SHALL BE EXCAVATED TO A DEPTH OF 12" FROM EX. P.G. & STOCK-PILED AT THE UNDEVELOPED PORTION OF THE PARK (CORNER OF NORWOOD & MITCHELL AVES) AS APPROVED BY INSPECTOR.
E. BLEACHERS FOR DEMOLITION.
F. BACKSTOP FOR DEMOLITION (STEEL POSTS CUT OFF AT THEIR CONCRETE BASE.
G. BACKSTOP FOR DEMOLITION (STEEL POSTS & THEIR FOOTINGS REMOVED.
P.G. FINISH GRADE.
D.G. DECOMPOSED GRANITE.
CHAIN-LINK FENCE.
LIMIT LINE OF D.G. EXCAVATION AS SHOWN.
PROPERTY LINE.
℄ CENTER LINE.
MH. MAN HOLE.
EXISTING SECURITY LIGHT STANDARDS TO REMAIN.
EXISTING TREES TO REMAIN IN PLACE.

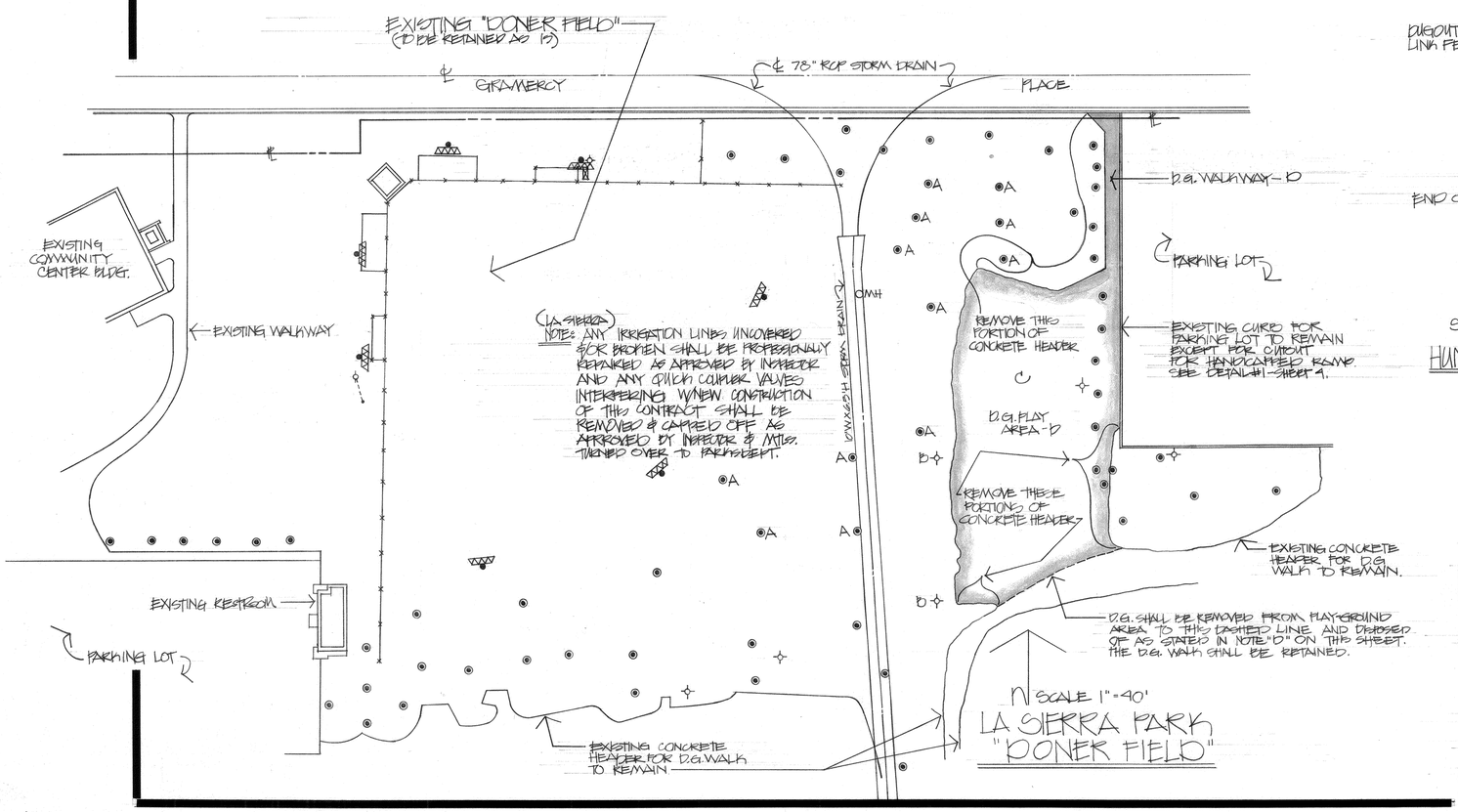

LA SIERRA PARK "DONER FIELD"

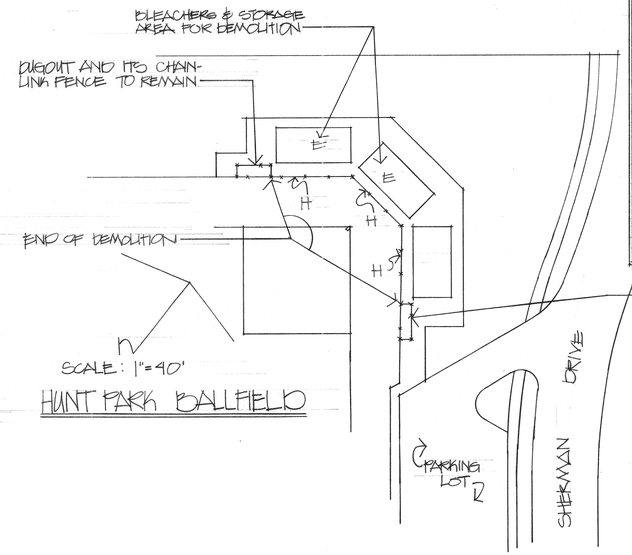

HUNT PARK BALLFIELD

BALLFIELD RENOVATION PROJECT

DEMOLITION PLAN

CITY OF RIVERSIDE
PARK AND RECREATION DEPARTMENT
REFURBISHMENT PROGRAM
1979-80 CAPITAL IMPROVEMENT PROGRAM

KIL SEPT. '79

P-127-7

SHEET 2

RISER DETAIL

RP-15555-J

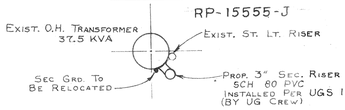

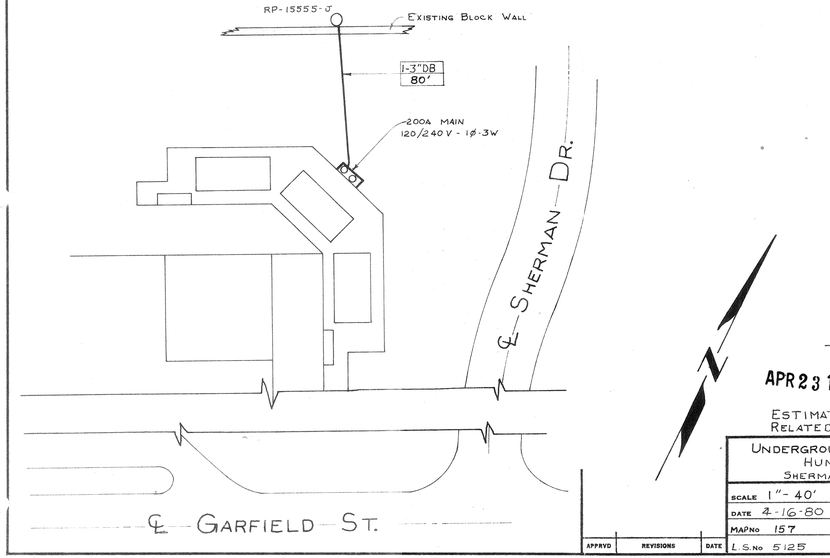

PLAN LEGEND

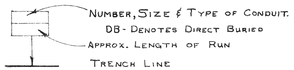

CUSTOMER PARTICIPATION

1. All facilities installed by the customer shall be inspected and approved by the Dept. Construction Inspector, phone 787-7429, prior to covering. Any field changes shall be approved by the Dept. prior to execution. It will be the customer's responsibility to coordinate with the Dept. Construction Supt., phone 787-7511, after the Inspector has notified construction that the customer's work is complete and ready for Dept. work.
2. Provide and install all substructures, conduits ~~(G.I.C., H.D. Polyethylene conduit, and~~ (pole riser conduit excepted) trenching, backfilling and resurfacing, on-site ~~(except as noted)~~ as shown and in conformance with the following standard drawings: UGS-100, 100.1, 115,A,116 ~~and 135.2.~~
3. $ 640 charge to be paid to Dept. prior to energizing service.
4. ~~Acquire a street opening permit prior to excavating in street right-of-way.~~
5. Meter room door to have schlage lock keyed to Dept. Master Key.
6. 90% relative compaction of trench backfill required.

DEPARTMENT PARTICIPATION

1. Provide and install all pole riser conduits, ~~H.D.Pe. conduits, G.I.C.~~, cables, terminations ~~and transformers~~ from source to terminating pullsection or pullbox ~~and off-site substructures, conduits, trenching, backfilling and resurfacing,~~ as shown in conformance with standard construction methods. Materials to be as specified on job material lists.
2. Obtain circuit number and reclosure type from substation operator.
3. ~~Call Public Works Department Inspection Division (ext. 346) for inspection of street or alley right of way excavations.~~
4. UG SERVICE IS 1-200 AMP MAIN - 120/240 V - 1ϕ - 3 W. SERVICE CABLES ARE 2-4/0 & 1-1/0 AL 600V XLPE.
5. EXISTING O.H. SERVICE TO BE REMOVED BY O.H. CREW AS PER O.H.M.W.O.-0153.

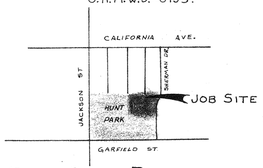

APR 23 1980

SITE PLAN

ESTIMATED DEMAND 38 KW
RELATED O.H. M.W.O. 0153

UNDERGROUND ELECTRICAL SERVICE TO
HUNT PARK BALL DIAMOND
SHERMAN DRIVE N/O GARFIELD STREET

SCALE 1"-40'	DRAWN ARENSMEYER	CITY OF RIVERSIDE DEPARTMENT OF PUBLIC UTILITIES
DATE 4-16-80	CHECKED	
MAP No 157	APPROVED	E DIV. — DRAWING NO. U2-6120
L.S. No 5125		

APPRVD	REVISIONS	DATE

CUSTOMER PRINT