DRAWING NUMBER

PLAN HOLD CORPORATION • IRVINE, CALIFORNIA

REORDER BY NUMBER 075AR

DRAWING NUMBER

PLAN HOLD CORPORATION • IRVINE, CALIFORNIA

REORDER BY NUMBER 075AR

DRAWING NUMBER

PLAN HOLD CORPORATION • IRVINE, CALIFORNIA

REORDER BY NUMBER 075AR

DRAWING NUMBER

PLAN HOLD CORPORATION • IRVINE, CALIFORNIA

REORDER BY NUMBER 075AR

DRAWING NUMBER

PLAN HOLD CORPORATION • IRVINE, CALIFORNIA

REORDER BY NUMBER 075AR

DRAWING NUMBER HA-7

PLAN HOLD CORPORATION • IRVINE, CALIFORNIA

REORDER BY NUMBER 075AR

SPRINKLER HEAD LEGEND

SYMBOL	DESCRIPTION	GPM	DIAMETER	PSI	RADIUS	MAKE	REF. No
⊙ ⊗ ⊠	FULL & PART CIRCLE POP-UP LAWN HD.	F=3.0, H=1.5, Q=.75	15	15	12.0	HYDRO-RAIN No 636 SERIES	9
⊠	" " " " "	Q=.5	10	10	9.0	" " 635 "	
○	FULL CIRCLE POP-UP ROTARY HD.	7.0	35	35	38.0	TORO No 624-00-26	9
⊠	" " " " "	9.5	40	40	48.0	" " 640-12-41	
⊙	" " " " "	12.0	40	50	52.0	" " 640-12-42	
⊗	PART " " " "	9.5	40	40	48.0	" " 640-02-41	
⊗	" " " " "	12.0	40	50	52.0	" " 640-02-42	

NOTES:

~~OPERATE POP-UP LAWN HDS 10 MIN/NT., 5 NTS/WK FOR 1.5" PRECIPITATION~~

~~" " STREAM SHRUB " 15 " 5 " / " " 1.5" "~~

~~" FULL CIRCLE ROTORS 36 " / " 5 " / " " 1.5" "~~

~~" PART " " 18 " / " 5 " / " " 1.5" "~~

TOTAL WATERING TIME = 7 HRS & 40 MINUTES/NIGHT

HARRISON SCHOOL

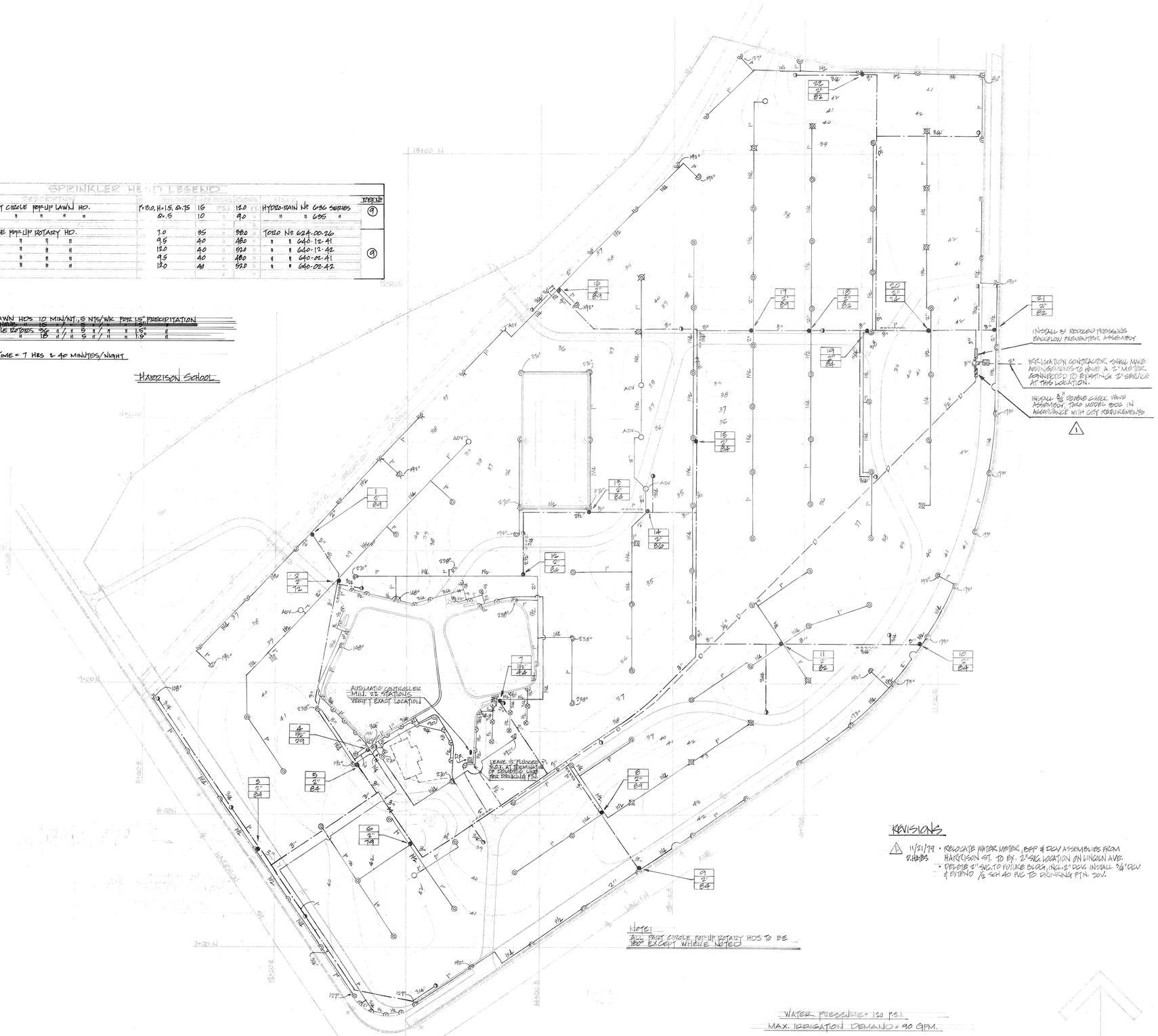

NOTE:
ALL PART CIRCLE POP-UP ROTARY HDS TO BE 180° EXCEPT WHERE NOTED

REVISIONS

1. 11/21/79 D.HAYES • RELOCATE WATER METER, BFP & DCV ASSEMBLIES FROM HARRISON ST. TO EX. 2" SVC. LOCATION ON LINCOLN AVE.
   • DELETE 2" SVC. TO FUTURE BLDG, INCL. 2" DCV. INSTALL 3/4" DCV & EXTEND 1/2 SCH 40 PVC TO DRINKING FTN. SOV.

WATER PRESSURE = 120 P.S.I.

MAX. IRRIGATION DEMAND = 90 GPM.

FOR LEGEND, NOTES & DETAILS, SEE SHEET No

recreation systems incorporated
landscape architecture
park and environmental planning
2500 east nutwood ave · fullerton ca 714/879-6373

HARRISON PARK

CITY OF RIVERSIDE

IRRIGATION PLAN

date 7-23-79

revised 11/21/79

sheet no. SP-1

29/32

DRAWING NUMBER
PLAN HOLD CORPORATION • IRVINE, CALIFORNIA
REORDER BY NUMBER 075AR

DRAWING NUMBER
Harrison HA-4
PLAN HOLD CORPORATION • IRVINE, CALIFORNIA
REORDER BY NUMBER 075AR

DELETE STRAINER.

4"

4" GALV. STEEL SCHED. 40

PVC MAIN ADAPT

1

NOTE: USE 4" SIZE PIPE, FITTINGS & BACKFLOW PREVENTER ON HYDE UNIT PARK HARRISON "

2"

2

9-2929-2"

W/C.I. LOCK LID

RED BRICK AT FOUR CORNERS

6

STL

W/C.I. LOCK LID

RED BRICK AT FOUR CORNERS

7

- BROOKS NO 37L

½"

½" MPTC THREADED BO

30" LONG: EPOXY PAINT GREEN

½" MPVC THRD. =

11

A.C. PAVING

SOIL & UNDER DRIVEWAYS

30" 24"

4" IN SIZE

	(4" SIZE) R.P. TYPE	1
	BACKFLOW PREVENTER (2" SIZE) R.P. TYPE	2
	REMOTE CONTROL VALVE	3
	AUTOMATIC CONTROLLER	4
	QUICK COUPLER VALVE IN PLANTING AREAS	5
	LINE SIZED SHUT-OFF VALVE (2" & UNDER)	6
	(3½" & OVER)	7
		8
		9 10 11

SCHED. 40

A14
2"
94

	1" QUICK COUPLER VALVE IN TENNIS COURTS	DETAIL NO 12
	3/4" DOUBLE CHECK VALVE ASSEMBLY	

PVC SCHED. 80 T.O.E. NIPPLE: 12" LONG

PVC COUPLING

RED BRICK AT FOUR CORNERS

3

BRONZE

BROOKS NO 37L TORO MODEL 216-06-(04,06,08)

8

-8"

3"

PVC SCHED. 80 THRD INSERT, 3" LONG

PVC THRD

PVC THRD

4

BROOKS NO 37L TORO MODEL 179-56-01

HOSE BIBB W/HAND WHEEL

COUPLER KEY

NOTE: PROVIDE ONE COUPLER KEY WITH HOSE BIBB ATTACHED FOR EVERY FOUR QUICK COUPLER VALVES INSTALLED ON EACH SITE.

W/LOCK TOP

5

COUPLER KEY: RAINBIRD NO 33K.
HOSE BIBB: CHAMPION NO 8240 - 3/4"

9

NOTE: ALL FITTINGS, NIPPLES, UNIONS, CHECK VALVE, ETC., SHALL BE SPRINKLER HD INLET (I.P.S.) SIZE.

TOP OF PUSH WITH PIN. GIRD.

¾" POPPET CHECK VALVE WHERE CALLED OUT ON DRWG

10

VALVE BOX FLUSH W/ TENNIS COURT

TENNIS COURT

FENCE POST

6"

PIN. GRD.

VINYL COVERED WIRE TO QUICK COUPLER VALVE IN CENTER OF VG.

18"

1" x 6" GALV. STEEL NIPPLE

RED BRICK AT FOUR CORNERS

1" GALV STEEL COUPLING-SEWN ZONE

PEA GRAVEL

1" GALV STEEL NIPPLE

1" PVC MAIN

CONCRETE SUPPORT

1" GALV STEEL 90° ELBOW

1" GALV STEEL COUPLING

1" x 24" LONG PVC SWEDGE TOE NIPPLE

1" GALV STEEL PIPE

1" PVC COUPLING

12 QUICK COUPLER VALVE IN TENNIS COURTS
NO SCALE
SYMBOL

SPECIFIED: QUICK COUPLER VALVE - RAINBIRD NO 44 LVC
VALVE BOX: BROOKS NO 91-

NOTE: PROVIDE ONE COUPLER KEY, RAINBIRD NO 44K WITH CALLS NO 100-1" X 1" TO EACH TENNIS COURT (MAINT. DEPT.)

PREVENTERS SHALL REDUCED PRESSURE TYPE BACKFLOW

SEE DETAILS 1 & 2

2½" 8"

recreation systems incorporated
landscape architecture
park and environmental planning
2500 east nutwood ave · fullerton ca 714/879-6373

HARRISON PARK
LYNN PARK
WASHINGTON PARK

CITY OF RIVERSIDE, CALIF

IRRIGATION LEGEND, NOTES & DETAILS

date 7-23-79

revised

sheet no. SP-4
32/32

SYMBOL	MANUFACTURER - MODEL NUMBER	PATTERN	RADIUS	PSI.	G.P.M. F	192	H	173	127	DETAIL REFERENCE	REMARKS
⊙⊙⊙⊙	TORO 570-01-AG NOZZLE POP-UP	4 PATTERN	50'	40	12	12	12	12	12	'E'	
●●	TORO 570-01-AG ROTOR POP-UP	R-H	50'	40	12		12			'E'	RETROFIT TO EXISTING HEADS
⊡	RAINBIRD CRC-8A AUTOMATIC CONTROLLER										
◔	TORO 214-80-08 E VALVE; TORO 6000-0 1½ VALVE (SEE 'A' FOR SIZE)									'B'	
⋈	NIBCO T-FIG SWEAT VALVE									'C'	
●	TORO SERIES 570-01 W/ VINYL COVER & KEY									'D'	
———	PVC SCHED 200 - 1" MIN SIZE										
———	PVC SCHED 315 MINIMUM - SIZE PER PLAN (2" MIN) SCHED 40										
NOT SHOWN	SOLID COVER 4" ABS OR PVC SEE SIGNAL - 2 SPARE CONDUITS, 4 EA. CONTROL WIRES & TAPE									SHEET 20	2" MIN OR AS PER CITY REQUIREMENTS

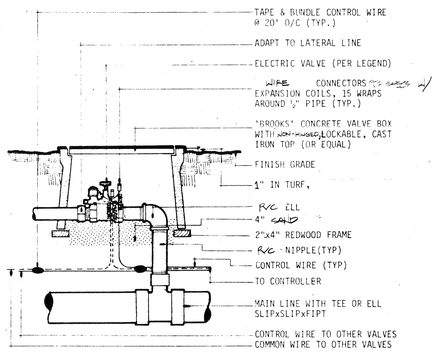

B CONTROL VALVE

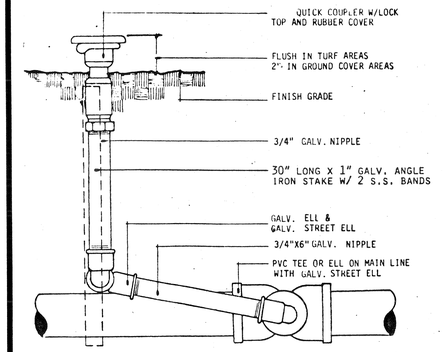

C GATE VALVE

D QUICK COUPLER

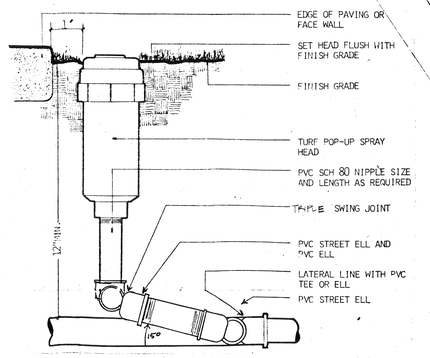

E TURF HEAD

1. PRIOR TO CONSTRUCTION THE CONTRACTOR SHALL CONTACT THE R&H'S PROJECT MGR. AND CO-ORDINATE ALL OBSERVATIONS. CONTRACTOR SHALL REQUEST OBSERVATIONS BY THE R&H'S PROJECT INSPECTOR 48 HOURS (MIN.) PRIOR TO AN OBSERVATION.

   A. THE MAIN LINE AND POC SHALL BE PRESSURE TESTED (PRIOR TO BACKFILL) AT NOT LESS THAN 125 PSI, FOR NOT LESS THAN TWO (2) HOURS AND PROVEN WATER TIGHT. THE TEST SHALL BE MADE IN THE PRESENCE OF THE INSPECTOR, SIGNED AND DATED.

R&H'S PROJECT MNGR. _____ DATE_____

   B. FINAL COVERAGE OBSERVATION - UPON COMPLETION OF THE IRRIGATION SYSTEMS, CONTRACTOR SHALL PERFORM A COVERAGE TEST WITH THE INSPECTOR ON ALL SYSTEMS TO VERIFY 100% DOUBLE COVERAGE. THE CONTRACTOR SHALL PERFORM ALL WORK AND FURNISH ALL MATERIALS NECESSARY TO CORRECT ANY INADEQUACIES AND ADJUST ARC OF SPRAY TO PREVENT OVERSPRAY.

R&H'S PROJECT MNGR. _____ DATE_____

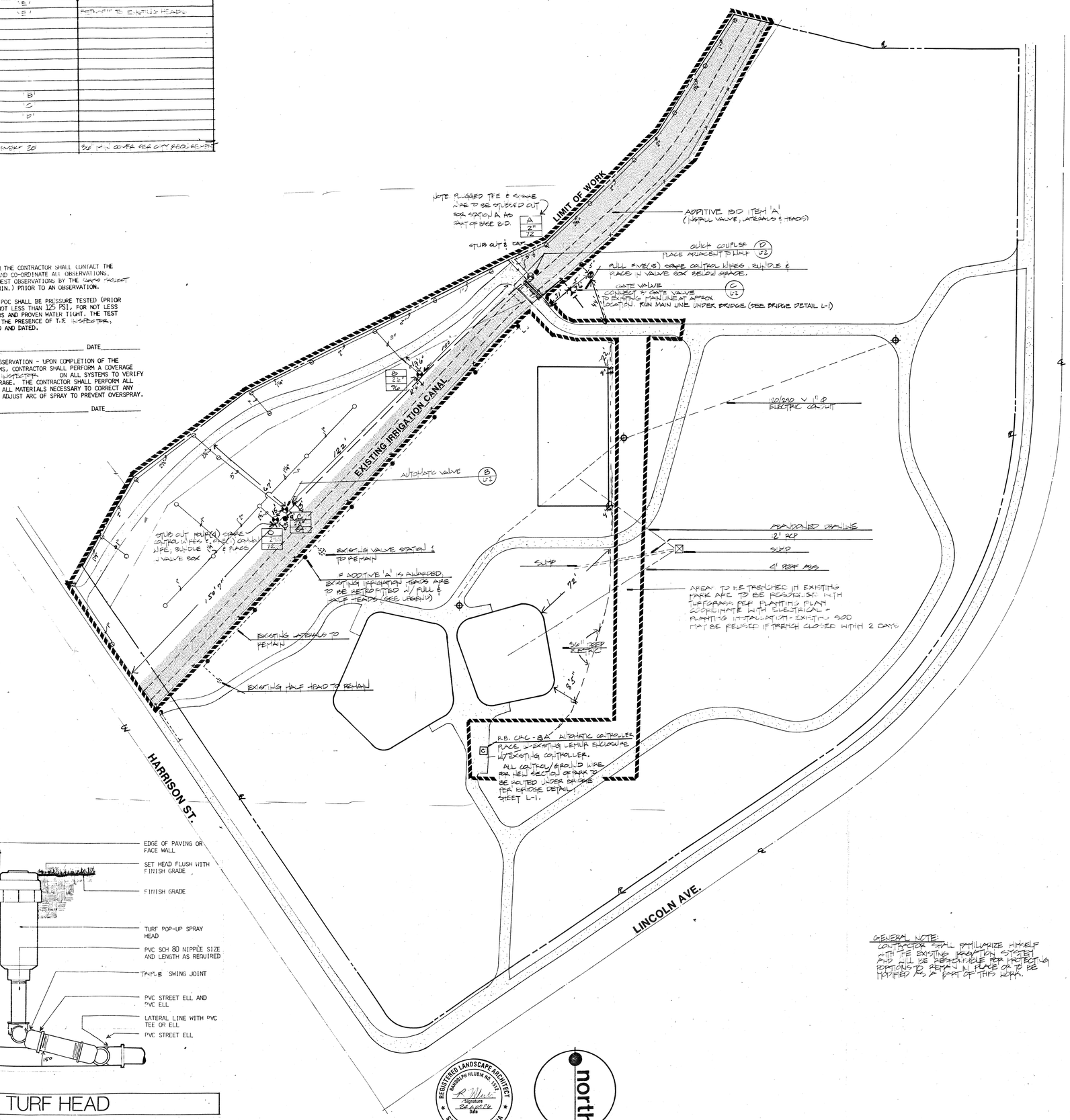

GENERAL NOTE:
CONTRACTOR SHALL FAMILIARIZE HIMSELF WITH THE EXISTING IRRIGATION SYSTEM AND WILL BE RESPONSIBLE FOR PROTECTING PORTIONS TO REMAIN IN PLACE OR TO BE MODIFIED AS A PART OF THIS WORK.

REGISTERED LANDSCAPE ARCHITECT RANDOLPH HLUBIK NO. 1575 — Signature — Date — STATE OF CALIFORNIA

north

BID SET
JUN 04 1985

REVISIONS	BY

Randolph Hlubik Associates, Inc.
Landscape Architecture
Environmental Planning
304 Main Street, Mission Inn Square, Suite 205, Riverside, CA 92501, Ph. (714) 781-8252

IRRIGATION PLAN

HARRISON PARK ADDITION
RIVERSIDE, CALIF.

DRAWN	L Ramsey
CHECKED	JOE FEART
DATE	11/14/85
SCALE	1"=30'
JOB NO.	85135
SHEET	L-2
OF	THREE SHEETS

AS BUILT 4-17-87

TELEDYNE POST 18AL-22 – 30 x 42