CITY OF RIVERSIDE PARKS AND RECREATION DEPARTMENT
CONSTRUCTION PLANS FOR PLAY AREA RENOVATIONS

ARLINGTON PARK

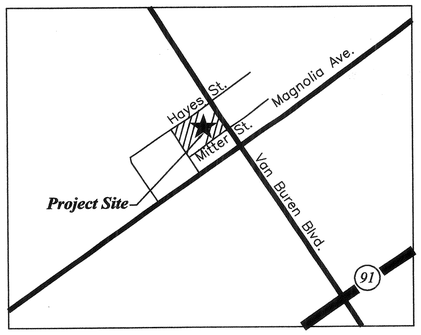

NOT TO SCALE

ARLINGTON PARK
3860 VAN BUREN BLVD.
RIVERSIDE, CALIFORNIA

HARRISON PARK

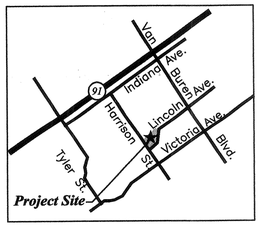

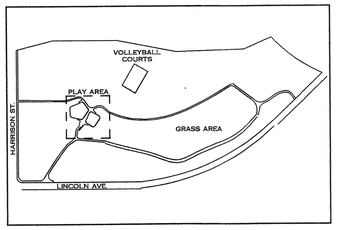

NOT TO SCALE

HARRISON PARK
HARRISON ST. AND
LINCOLN AVE.
RIVERSIDE, CALIFORNIA

HIGHLAND PARK

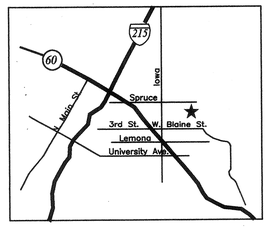

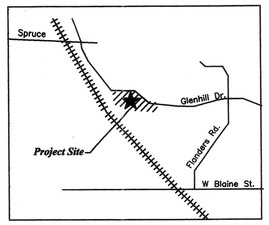

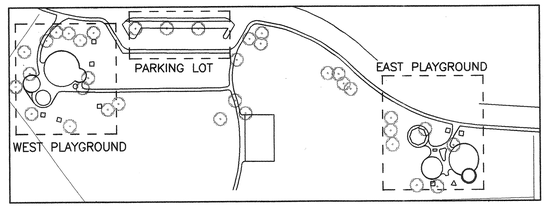

NOT TO SCALE

HIGHLAND PARK
780 GLENHILL DR.
RIVERSIDE, CALIFORNIA

MYRA LINN PARK

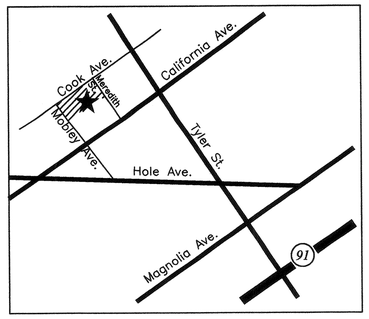

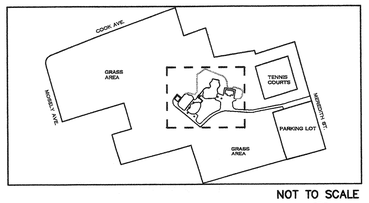

NOT TO SCALE

MYRA LINN PARK
MOBLEY AVE. AND COOK AVE.
RIVERSIDE, CALIFORNIA

SHEET INDEX

1	PROJECT COVER SHEET	PR-CS
2	ARLINGTON COVER SHEET	AR-CS
3	ARLINGTON SITE DEMOLITION	AR-SD
4	ARLINGTON PRECISE GRADING	AR-PG
5	ARLINGTON SITE CONSTRUCTION	AR-SC
6	ARLINGTON PLAY AREA DETAIL	AR-PA
7	ARLINGTON LANDSCAPE IRRIGATION	AR-LI
8	ARLINGTON LANDSCAPE PLANTING	AR-LP
9	HARRISON COVER SHEET	HA-CS
10	HARRISON SITE DEMOLITION	HA-SD
11	HARRISON PRECISE GRADING	HA-PG
12	HARRISON SITE CONSTRUCTION	HA-SC
13	HARRISON PLAY AREA DETAIL	HA-PA
14	HARRISON LANDSCAPE IRRIGATION	HA-LI
15	HARRISON LANDSCAPE PLANTING	HA-LP
16	HIGHLAND COVER SHEET	HI-CS
17	HIGHLAND SITE DEMOLITION	HI-SD
18	HIGHLAND PRECISE GRADING	HI-PG
19	HIGHLAND SITE CONSTRUCTION	HI-SC-1
20	HIGHLAND SITE CONSTRUCTION	HI-SC-2
21	HIGHLAND PLAY AREA DETAIL	HI-PA
22	HIGHLAND LANDSCAPE IRRIGATION	HI-LI
23	HIGHLAND LANDSCAPE PLANTING	HI-LP
24	MYRA LINN COVER SHEET	MY-CS
25	MYRA LINN SITE DEMOLITION	MY-SD
26	MYRA LINN PRECISE GRADING	MY-PG
27	MYRA LINN SITE CONSTRUCTION	MY-SC
28	MYRA LINN PLAY AREA DETAIL	MY-PA
29	MYRA LINN LANDSCAPE IRRIGATION	MY-LI
30	MYRA LINN LANDSCAPE PLANTING	MY-LP
31	CONSTRUCTION DETAILS	LCD-1
32	CONSTRUCTION DETAILS	LCD-2
33	DRINKING FOUNTAIN FABRICATION	LCD-3
34	IRRIGATION/PLANTING DETAILS	LID/LPD

GENERAL MAP

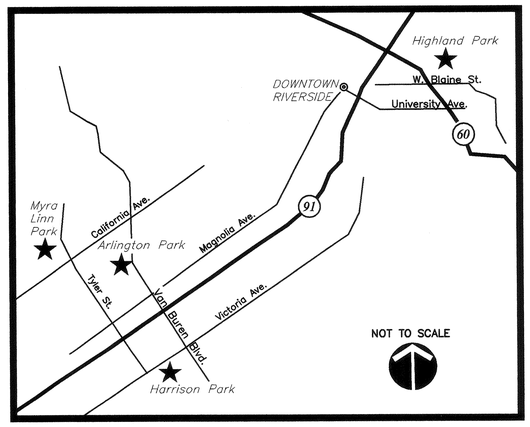

Landscape Architecture
Park Planning & Design
Project Management

Hirsch & Associates Inc.
ASLA

2221 E. WINSTON RD. SUITE A
ANAHEIM, CALIFORNIA 92806
PHONE (714)776-4340 FAX (714)776-4395

Project;
CITY OF RIVERSIDE
PLAY AREA RENOVATIONS

LICENSED LANDSCAPE ARCHITECT
PATRICK L. HIRSCH
1710
3-31-03
8-30-01
STATE OF CALIFORNIA

Date; 8-30-01
Design; P. HIRSCH
Job No; 0015

Description;
PACKAGE
COVER
SHEET

DRAWING
PR-CS
SHEET 1 OF 34

PARK AND RECREATION DIRECTOR
8/22/01
DATE:

PARKS MAINTENANCE SUPERINTENDENT
8/22/01
DATE:

HARRISON PARK
PLAY AREA RENOVATIONS

Hirsch & Associates Inc.
Landscape Architecture
Park Planning & Design
Project Management
2221 E. WINSTON RD. SUITE A
ANAHEIM, CALIFORNIA 92806
PHONE (714)776-4340 FAX (714)776-4395
A S L A

Project;
CITY OF RIVERSIDE
HARRISON PARK
HARRISON ST. AND LINCOLN AVE.
RIVERSIDE, CALIFORNIA

LICENSED LANDSCAPE ARCHITECT
PATRICK L. HIRSCH
3710
3-31-03
8-30-01
STATE OF CALIFORNIA

Date; 8-30-01
Design; P. HIRSCH
Job No; 0015

Description;
HARRISON
COVER
SHEET

Drawing
HA-CS
Sheet 9 Of 34

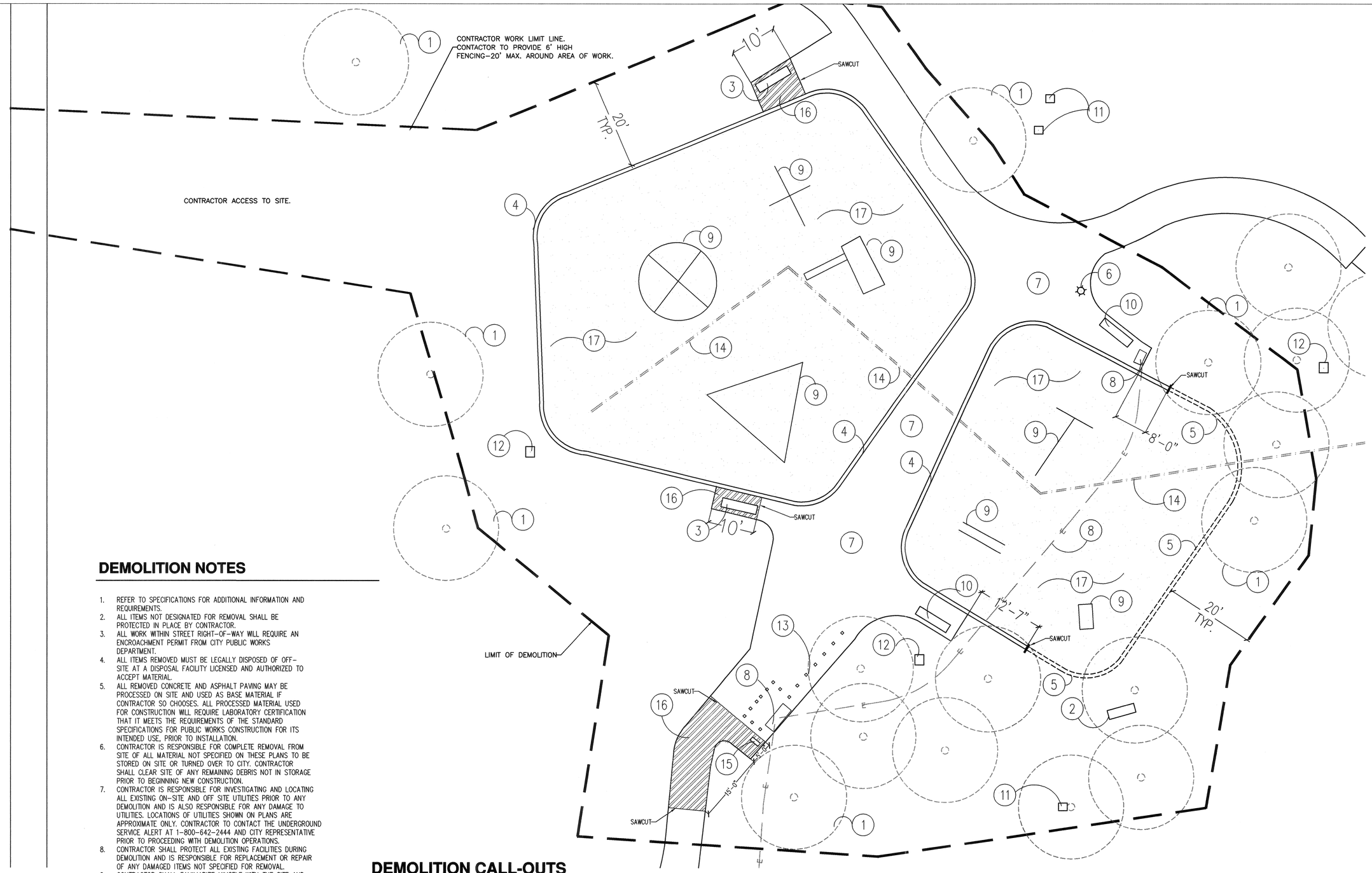

DEMOLITION NOTES

1. REFER TO SPECIFICATIONS FOR ADDITIONAL INFORMATION AND REQUIREMENTS.
2. ALL ITEMS NOT DESIGNATED FOR REMOVAL SHALL BE PROTECTED IN PLACE BY CONTRACTOR.
3. ALL WORK WITHIN STREET RIGHT-OF-WAY WILL REQUIRE AN ENCROACHMENT PERMIT FROM CITY PUBLIC WORKS DEPARTMENT.
4. ALL ITEMS REMOVED MUST BE LEGALLY DISPOSED OF OFF-SITE AT A DISPOSAL FACILITY LICENSED AND AUTHORIZED TO ACCEPT MATERIAL.
5. ALL REMOVED CONCRETE AND ASPHALT PAVING MAY BE PROCESSED ON SITE AND USED AS BASE MATERIAL IF CONTRACTOR SO CHOOSES. ALL PROCESSED MATERIAL USED FOR CONSTRUCTION WILL REQUIRE LABORATORY CERTIFICATION THAT IT MEETS THE REQUIREMENTS OF THE STANDARD SPECIFICATIONS FOR PUBLIC WORKS CONSTRUCTION FOR ITS INTENDED USE, PRIOR TO INSTALLATION.
6. CONTRACTOR IS RESPONSIBLE FOR COMPLETE REMOVAL FROM SITE OF ALL MATERIAL NOT SPECIFIED ON THESE PLANS TO BE STORED ON SITE OR TURNED OVER TO CITY. CONTRACTOR SHALL CLEAR SITE OF ANY REMAINING DEBRIS NOT IN STORAGE PRIOR TO BEGINNING NEW CONSTRUCTION.
7. CONTRACTOR IS RESPONSIBLE FOR INVESTIGATING AND LOCATING ALL EXISTING ON-SITE AND OFF SITE UTILITIES PRIOR TO ANY DEMOLITION AND IS ALSO RESPONSIBLE FOR ANY DAMAGE TO UTILITIES. LOCATIONS OF UTILITIES SHOWN ON PLANS ARE APPROXIMATE ONLY. CONTRACTOR TO CONTACT THE UNDERGROUND SERVICE ALERT AT 1-800-642-2444 AND CITY REPRESENTATIVE PRIOR TO PROCEEDING WITH DEMOLITION OPERATIONS.
8. CONTRACTOR SHALL PROTECT ALL EXISTING FACILITIES DURING DEMOLITION AND IS RESPONSIBLE FOR REPLACEMENT OR REPAIR OF ANY DAMAGED ITEMS NOT SPECIFIED FOR REMOVAL.
9. CONTRACTOR SHALL FAMILIARIZE HIMSELF WITH THE SITE AND REPORT ANY POTENTIAL PROBLEMS OR DISCREPANCIES TO THE CITY PRIOR TO COMMENCING WORK.
10. CONTRACTOR SHALL SECURE THE CONSTRUCTION SITE WITH 6' HIGH TEMPORARY CONSTRUCTION CHAIN LINK FENCE FOR THE LENGTH OF THE CONSTRUCTION PERIOD INCLUDING THE MAINTENANCE PERIOD.
11. CONTRACTOR IS RESPONSIBLE FOR ALL EROSION CONTROL OF THE CONSTRUCTION SITE DURING BOTH CONSTRUCTION AND MAINTENANCE PERIODS. CONTRACTOR SHALL SUBMIT EROSION CONTROL PLANS TO THE CITY FOR APPROVAL PRIOR TO ANY CONSTRUCTION.
12. CONTRACTOR TO RIP ALL AREAS IN WHICH DEMOLITION WORK HAS OCCURRED TO A DEPTH OF 12" AND REMOVE ALL DEBRIS GENERATED BY CONTRACTOR.
13. REMOVE ALL VEGETATION WITHIN PROPOSED CONSTRUCTION AREAS TO A DEPTH OF 6" BELOW EXISTING SURFACE, GRUB AND REMOVE ALL TREE AND SHRUB ROOTS.
14. CONTRACTOR IS RESPONSIBLE FOR REMOVAL, EXCAVATION AND BACKFILL OF ALL ITEMS REQUIRING REMOVAL THAT ARE NOT SPECIFICALLY MENTIONED ON THE PLANS BUT ARE REQUIRED FOR PROPER EXECUTION OF PLANS. NO ADDITIONAL COMPENSATION WILL BE ALLOWED.

DEMOLITION CALL-OUTS

1. EXISTING TREES, TO BE PROTECTED
2. EXISTING PICNIC TABLES, TO BE PROTECTED.
3. EXISTING BENCH TO BE REMOVED
4. EXISTING PORTION OF PLAY CURB TO BE PROTECTED IN PLACE. SEE CONSTRUCTION PLAN.
5. EXISTING PLAY AREA CURB TO BE REMOVED
6. EXISTING LIGHT TO BE PROTECTED
7. EXISTING CONCRETE WALKWAY TO BE PROTECTED. CONTRACTOR NOT TO USE WALKWAY FOR HEAVY EQUIPMENT
8. EXISTING ELECTRICAL EQUIPMENT AND CONDUIT, TO BE PROTECTED IN PLACE. POTHOLE TO VERIFY LOCATION AND DEPTH
9. EXISTING PLAY EQUIPMENT TO BE REMOVED.
10. EXISTING BENCH TO BE PROTECTED
11. EXISTING BBQ, TO BE PROTECTED
12. EXISTING RCV TO BE PROTECTED
13. EXISTING BOLLARDS TO BE PROTECTED
14. EXISTING 4" PERFORATED PIPE TO BE PROTECTED IN PLACE
15. REMOVE EXISTING DRINKING FOUNTAIN AND RETURN TO CITY. ABANDON SUMP AND REMOVE RELATED ITEMS.
16. SAWCUT AND REMOVE CONCRETE WITHIN SHADED AREA
17. EXISTING SAND SURFACE TO BE USED AS BACKFILL UNDER NEW SAFETY SURFACING.

0" 10 20' 30'

DIGALERT
DIAL TOLL FREE
1-800-422-4133
AT LEAST TWO DAYS BEFORE YOU DIG

UNDERGROUND SERVICE ALERT OF SOUTHERN CALIFORNIA

Hirsch & Associates Inc.
Landscape Architecture
Park Planning & Design
Project Management
2221 E. WINSTON RD. SUITE A
ANAHEIM, CALIFORNIA 92806
PHONE (714)776-4340 FAX (714)776-4395
A S L A

Project;
CITY OF RIVERSIDE
HARRISON PARK
HARRISON ST. AND LINCOLN AVE.
RIVERSIDE, CALIFORNIA

LICENSED LANDSCAPE ARCHITECT
PATRICK L. HIRSCH
1710
2-31-03
8-30-01
STATE OF CALIFORNIA

Date; 8-30-01
Design; P. HIRSCH
Job No; 0015

Description;
SITE DEMOLITION PLAN

DRAWING
HA-SD
SHEET 10 OF 34

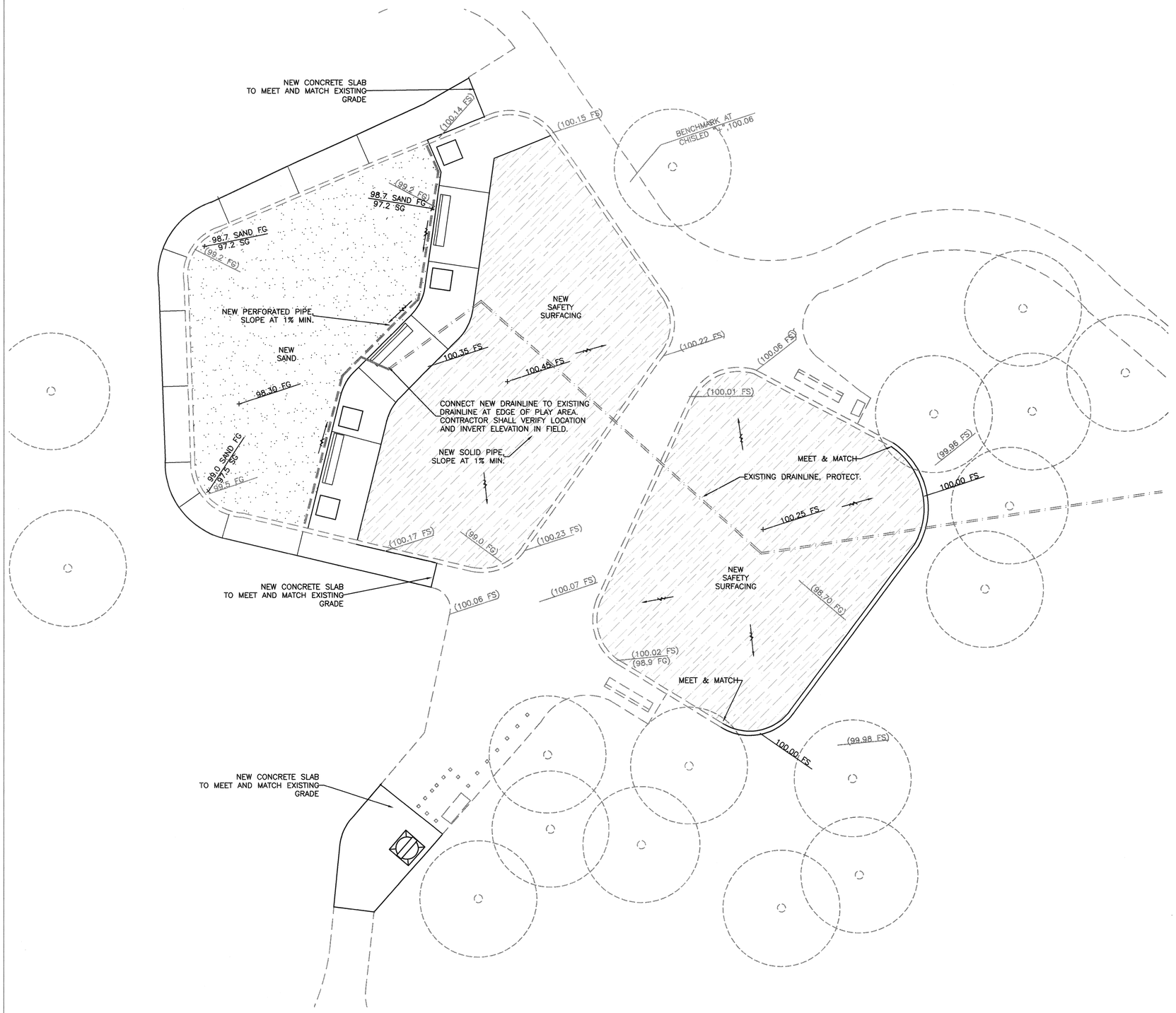

GRADING NOTES

1. CONTRACTOR SHALL VERIFY ALL SITE CONDITIONS, DIMENSIONS, LOCATIONS AND DEPTHS OF ALL UNDERGROUND UTILITIES, PRIOR TO START OF WORK.
2. CONTRACTOR SHALL PERFORM ALL EXCAVATION, COMPACTED BACKFILL, SOIL IMPORT AND GRADING WORK TO ESTABLISH ALL SUBGRADES AND FINISHED GRADES FOR ALL EARTHWORK, CONCRETE FLAT WORK, FOOTINGS, WALLS, DECKS, RAMPS, CURBING, AND WALKS AS INDICATED ON PLAN.
3. REFER TO CONSTRUCTION PLAN FOR FURTHER INFORMATION.
4. COMPACTION FOR ALL LANDSCAPED AREAS SHALL BE 80% RELATIVE COMPACTION. FOR FILL, USE CLASS A IMPORTED TOP SOIL
5. CONCRETE SLABS PROPOSED TO RECEIVE FILL SHALL BE SCARIFIED TO A DEPTH OF 6" AND COMPACTED TO 90 OF FILL. FOR FILL, USE CLASS II AGGREGATE BASE FOR UNDER SLABS, SWALE, AND SAND AREA.
6. CONCRETE SLAB AREAS PROPOSED FOR CUTS SHALL BE SCARIFIED TO A DEPTH OF 6", AFTER EXCAVATION OF CUT MATERIAL, AND COMPACTED TO 90%.

ABBREVIATIONS

TC	TOP OF CURB
FS	FINISHED SURFACE
FG	FINISHED GRADE
SG	SUB GRADE SURFACE
2% →	PERCENT OF GRADE
~~→	DIRECTION OF FLOW

ALL EXISTING ELEVATIONS AND SITE WORK ARE INDICATED IN HALF-TONE.

TRENCH BACKFILL

1. SOLID DRAIN LINE. SEE DETAIL I, SHEET LCD-2 SURFACE ZONE TO BE ON SITE SOIL. PIPE ZONE TO BE WASHED PLASTER SAND.
2. PERFORATED PIPE. SEE DETAIL C, SHEET LCD-2. SURFACE AND PIPE ZONE TO BE 3/4" CRUSHED ROCK.

PIPE LEGEND

SCH. 40 PVC OR ABS SOLID DRAIN LINE

SCH. 40 PVC OR ABS PERFORATED DRAIN LINE WITH FILTER FABRIC WRAP.(MIRIFI N-140)

0" 10 20' 30'

Hirsch & Associates Inc.
Landscape Architecture
Park Planning & Design
Project Management
2221 E. WINSTON RD. SUITE A
ANAHEIM, CALIFORNIA 92806
PHONE (714)776-4340 FAX (714)776-4395
A S L A

Project;
CITY OF RIVERSIDE
HARRISON PARK
HARRISON ST. AND LINCOLN AVE.
RIVERSIDE, CALIFORNIA

LICENSED LANDSCAPE ARCHITECT
PATRICK L. HIRSCH
1710
8-31-03
8-30-01
STATE OF CALIFORNIA

Date; 8-30-01
Design; P. HIRSCH
Job No; 0015

Description;
PRECISE GRADING PLAN

DRAWING
HA-PG
SHEET 11 OF 34

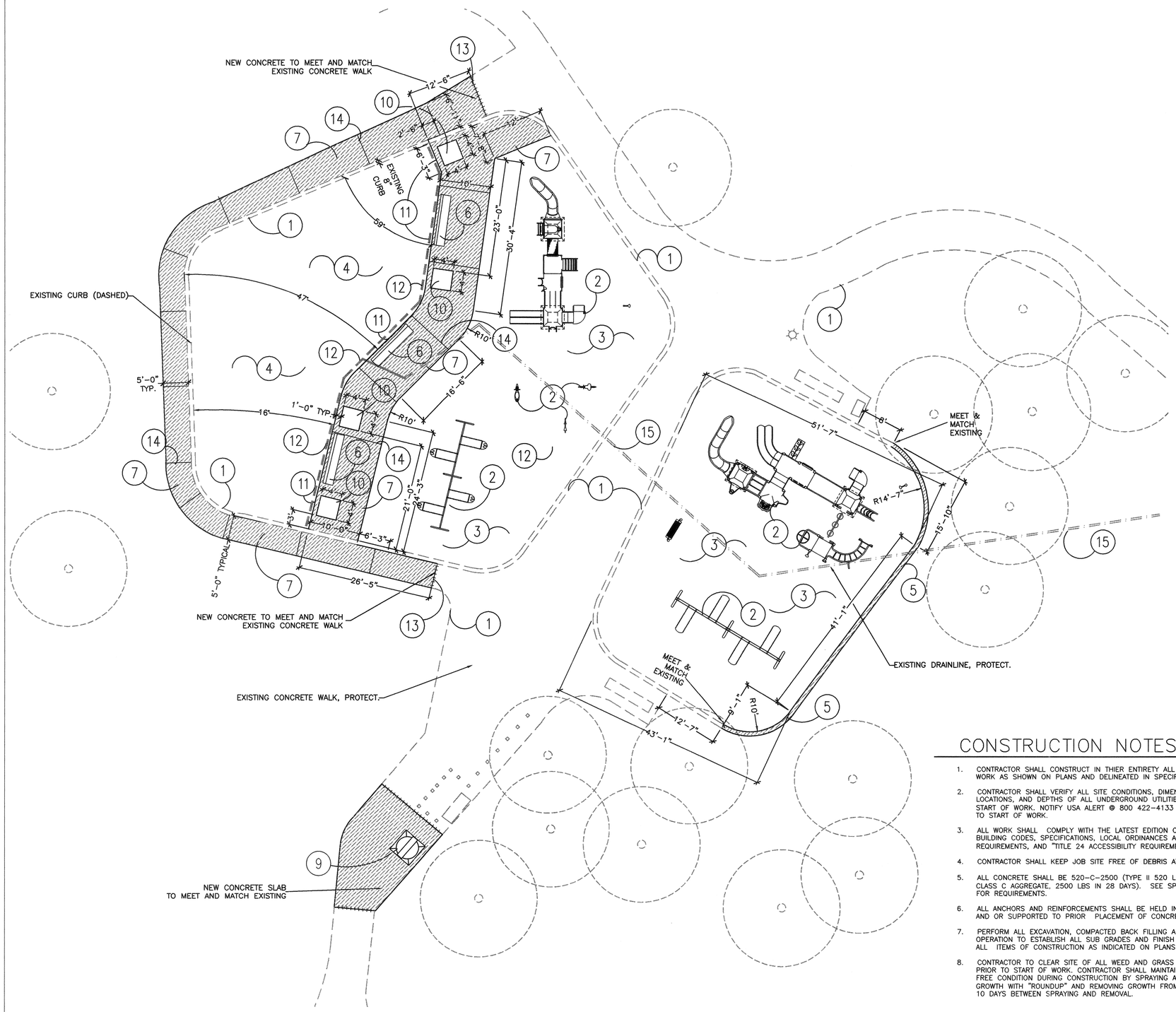

CONSTRUCTION CALL-OUTS

1. EXISTING EDGE OF CONCRETE WALK, PROTECT
2. NEW PLAYGROUND EQUIPMENT, SEE SHEET HA-PA.
3. NEW PLAY AREA SURFACING, SEE DETAIL L, SHEET LCD-2.
4. NEW SILICA SAND, SEE SPECIFICATIONS. EXCAVATE EXISTING SAND AND USE AS BACKFILL UNDER NEW SAFETY SURFACING.
5. NEW CONCRETE PLAY AREA CURB, SEE DETAIL K, SHEET LCD-1. MEET AND MATCH EXISTING WHERE APPLICABLE.
6. NEW BENCH, SEE SPECIFICATIONS
7. NEW 4" THICK CONCRETE SLAB, SEE DETAIL A, SHEET LCD-1.
8. REMOVE EXISTING DRINKING FOUNTAIN AND SUMP, PROTECT DOMESTIC WATER POINT OF CONNECTION.
9. INSTALL NEW DRINKING FOUNTAIN & SUMP. CONNECT TO EXISTING DOMESTIC WATER POINT OF CONNECTION FROM DEMOLISHED FOUNTAIN. SEE SHEET LCD-3 FOR FOUNTAIN REQUIREMENTS AND INSTALL.
10. 4' SQUARE TREE WELL CUTOUT. SEE DETAIL C, SHEET LCD-2
11. SAND AREA CURB AT SIDEWALK, SEE DETAIL A, SHEET LCD-2.
12. SAND AREA DRAIN, SEE DETAIL C, SHEET LCD-2.
13. EXPANSION JOINT, SEE DETAIL B, SHEET LCD-1.
14. CONTROL JOINT, SEE DETAIL C, SHEET LCD-1.
15. POT HOLE AND LOCATE EXISTING DRAINLINE PRIOR TO INSTALLATION OF PLAY EQUIPMENT, NOTIFY CITY REPRESENTATIVE IF A CONFLICT WILL OCCUR BETWEEN EXISTING DRAINLINE AND PLAY EQUIPMENT.

NOTE: DASHED LINES INDICATE EXISTING FEATURES.

CONSTRUCTION NOTES

1. CONTRACTOR SHALL CONSTRUCT IN THIER ENTIRETY ALL ITEMS OF WORK AS SHOWN ON PLANS AND DELINEATED IN SPECIFICATIONS.
2. CONTRACTOR SHALL VERIFY ALL SITE CONDITIONS, DIMENSIONS, LOCATIONS, AND DEPTHS OF ALL UNDERGROUND UTILITIES PRIOR TO START OF WORK. NOTIFY USA ALERT @ 800 422-4133 (48) HOURS PRIOR TO START OF WORK.
3. ALL WORK SHALL COMPLY WITH THE LATEST EDITION OF THE UNIFORM BUILDING CODES, SPECIFICATIONS, LOCAL ORDINANCES AND ADA REQUIREMENTS, AND "TITLE 24 ACCESSIBILITY REQUIREMENTS."
4. CONTRACTOR SHALL KEEP JOB SITE FREE OF DEBRIS AT ALL TIMES.
5. ALL CONCRETE SHALL BE 520-C-2500 (TYPE II 520 LBS LBS CEMENT / CU. YDS., CLASS C AGGREGATE, 2500 LBS IN 28 DAYS). SEE SPECIFICATIONS FOR REQUIREMENTS.
6. ALL ANCHORS AND REINFORCEMENTS SHALL BE HELD IN PLACE, TIED AND OR SUPPORTED TO PRIOR PLACEMENT OF CONCRETE,
7. PERFORM ALL EXCAVATION, COMPACTED BACK FILLING AND GRADING OPERATION TO ESTABLISH ALL SUB GRADES AND FINISH GRADES FOR ALL ITEMS OF CONSTRUCTION AS INDICATED ON PLANS.
8. CONTRACTOR TO CLEAR SITE OF ALL WEED AND GRASS GROWTH PRIOR TO START OF WORK. CONTRACTOR SHALL MAINTAIN SITE IN WEED FREE CONDITION DURING CONSTRUCTION BY SPRAYING ALL WEED GROWTH WITH "ROUNDUP" AND REMOVING GROWTH FROM SITE. ALLOW 10 DAYS BETWEEN SPRAYING AND REMOVAL.
9. CONTRACTOR SHALL PROVIDE ALL SURVEY WORK NECESSARY FOR CONSTRUCTION. CONTRACTOR SHALL ESTABLISH ALL ELEVATIONS FOR CONSTRUCTION.
10. ALL LAYOUT AND FORMING OF CONSTRUCTION ITEMS MUST BE REVIEWED AND APPROVED BY CITY REPRESENTATIVE PRIOR TO CONSTRUCTION.
11. RADIUS ALL EXPOSED EDGES OF CONCRETE WITH 1/2" RADIUS FINISHING TOOL.
12. ALL CONCRETE FLAT WORK SHALL BE 4" THICK WITH A MEDIUM BROOM FINISH UNLESS SPECIFIED OTHERWISE.
13. ALL CONCRETE DRIVE APPROACHES AND CONCRETE SUBJECT TO VEHICULAR TRAFFIC SHALL BE 8" THICK WITH A MEDIUM BROOM FINISH UNLESS SPECIFIED OTHERWISE.
14. ALL WORK SHALL COMPLY WITH ALL REQUIREMENTS OF THE CALIFORNIA OCCUPATIONAL SAFETY AND HEALTH ADMINISTRATION.
15. ALL NEW CONSTRUCTION TO MEET AND MATCH EXISTING.

0" 10 20' 30'

Hirsch & Associates Inc.
Landscape Architecture
Park Planning & Design
Project Management
2221 E. WINSTON RD. SUITE A
ANAHEIM, CALIFORNIA 92806
PHONE (714)776-4340 FAX (714)776-4395
A S L A

Project;
CITY OF RIVERSIDE
HARRISON PARK
HARRISON ST. AND LINCOLN AVE.
RIVERSIDE, CALIFORNIA

LICENSED LANDSCAPE ARCHITECT
PATRICK L. HIRSCH
1710
9-21-03
8-30-01
STATE OF CALIFORNIA

Date; 8-30-01
Design; P. HIRSCH
Job No; 0015

Description;
SITE CONSTRUCTION PLAN

DRAWING
HA-SC
SHEET 12 OF 34

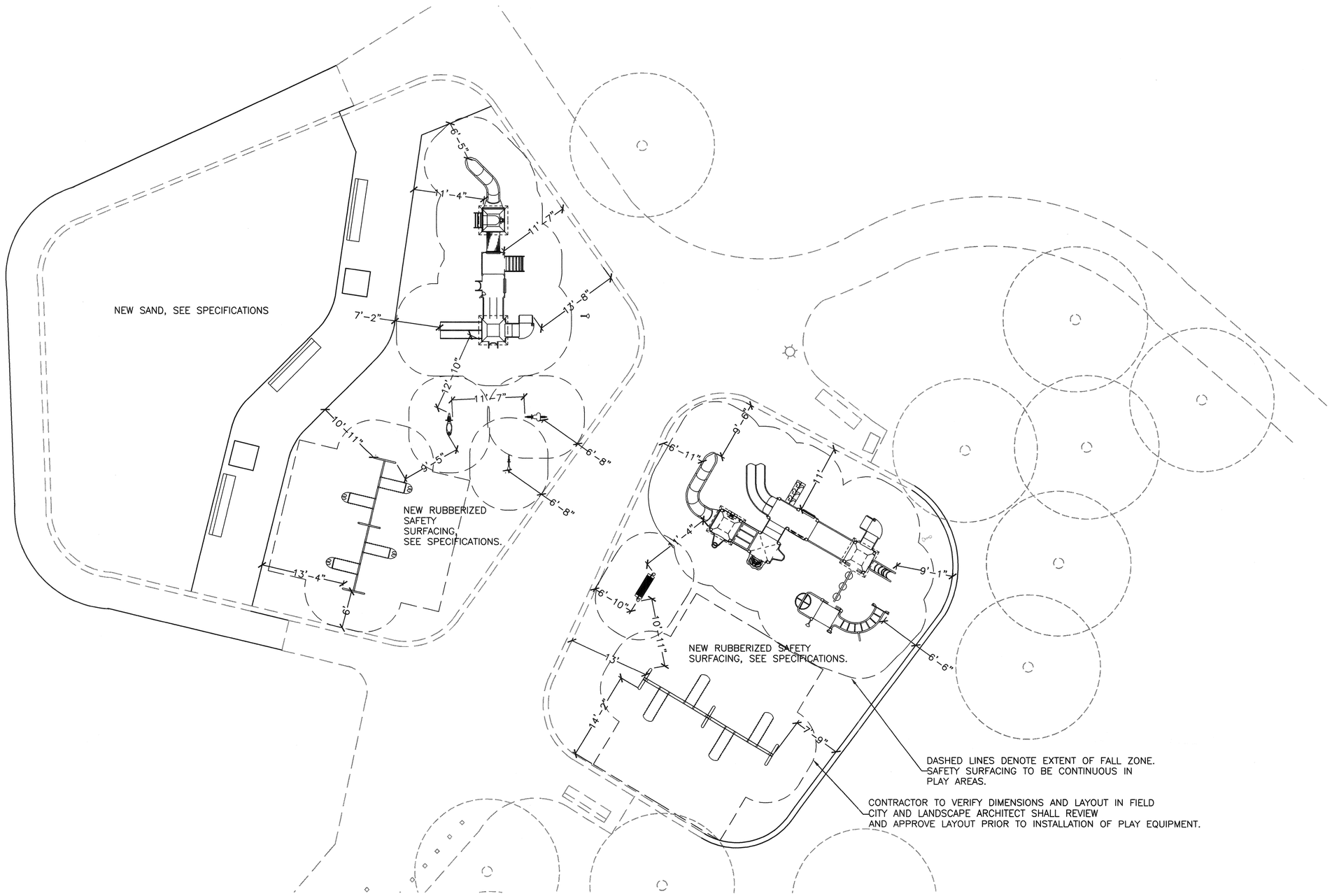

ENLARGED LAYOUT PLAN PLAY AREA

SEE SPECIFICATIONS FOR MATERIAL LIST. COLORS TO BE SELECTED BY CITY REPRESENTATIVE.

SCALE: 1/8"=1'-0"

Hirsch & Associates Inc.
Landscape Architecture
Park Planning & Design
Project Management
2221 E. WINSTON RD. SUITE A
ANAHEIM, CALIFORNIA 92806
PHONE (714)776-4340 FAX (714)776-4395
A S L A

Project;
CITY OF RIVERSIDE
HARRISON PARK
HARRISON ST. AND LINCOLN AVE.
RIVERSIDE, CALIFORNIA

LICENSED LANDSCAPE ARCHITECT
PATRICK L. HIRSCH
1710
3-21-03
8-30-01
STATE OF CALIFORNIA

Date; 8-30-01
Design; P. HIRSCH
Job No; 0015

Description;
ENLARGED PLANS OF PLAY AREAS

Drawing
HA-PA
Sheet 13 Of 34

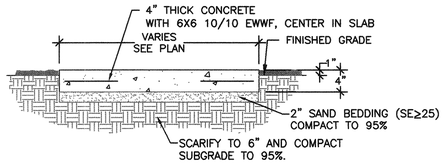

4" THICK CONCRETE

NOT TO SCALE (A)

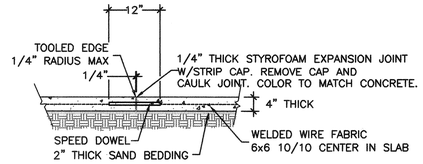

EXPANSION JOINT

NOT TO SCALE (B)

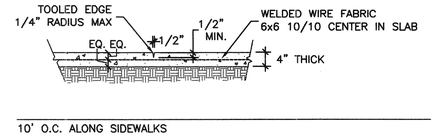

10' O.C. ALONG SIDEWALKS

CONTROL JOINT

NOT TO SCALE (C)

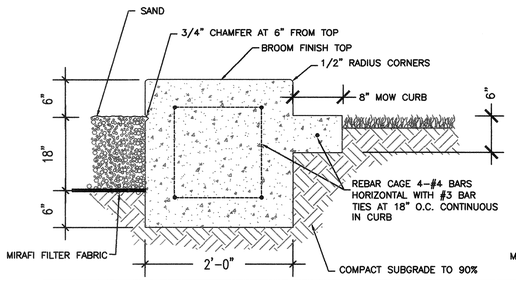

ADJACENT TO TURF

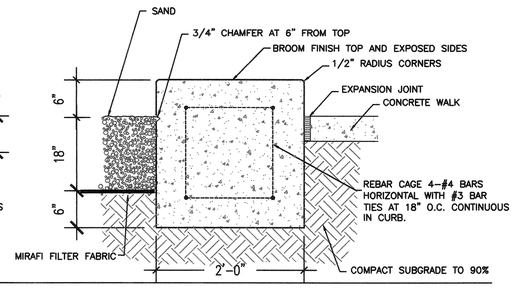

ADJACENT TO A
CONCRETE SLAB

SAND AREA CURB

NOT TO SCALE (D)

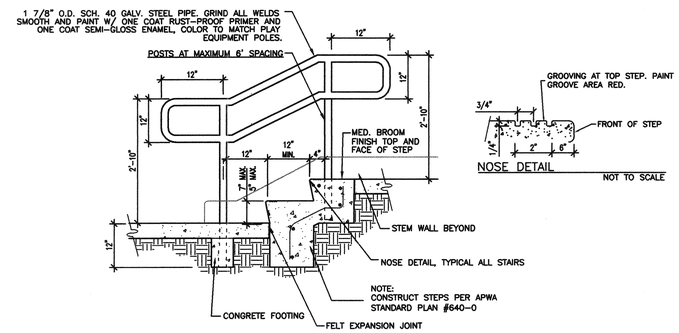

CONCRETE STAIRS

NOT TO SCALE (E)

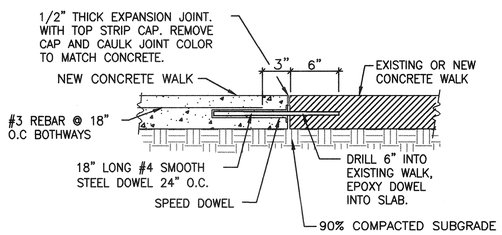

DOWELED JOINT

NOT TO SCALE (F)

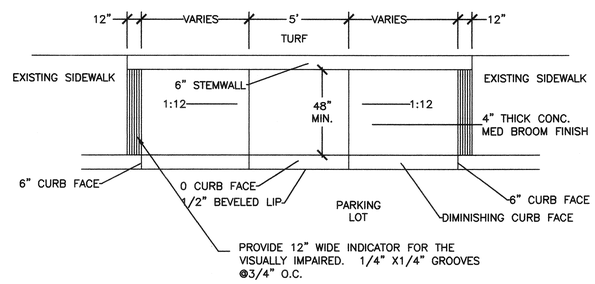

HANDICAP RAMP

NOT TO SCALE (G)

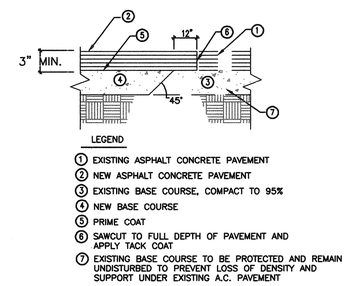

ASPHALT PAVING

NOT TO SCALE (H)

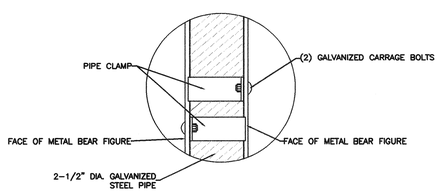

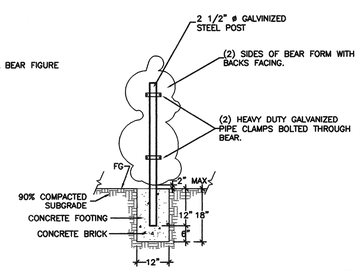

BEAR MOUNTING

NOT TO SCALE (I)

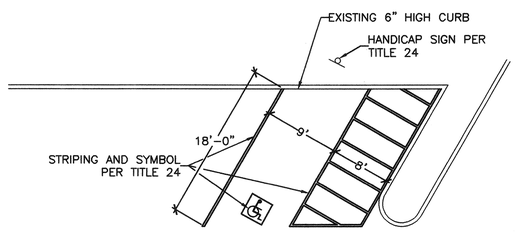

HANDICAP PARKING STRIPING

NOT TO SCALE (J)

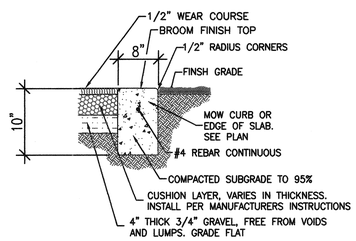

PLAY AREA CURB

NOT TO SCALE (K)

Hirsch & Associates Inc.
Landscape Architecture
Park Planning & Design
Project Management
2221 E. WINSTON RD. SUITE A
ANAHEIM, CALIFORNIA 92806
PHONE (714)776-4340 FAX (714)776-4395
A S L A

Project;

CITY OF RIVERSIDE
PLAY AREA RENOVATIONS

Date; 8-30-01
Design; P. HIRSCH
Job No; 0015

Description;

CONSTRUCTION
DETAILS

DRAWING
LCD-1

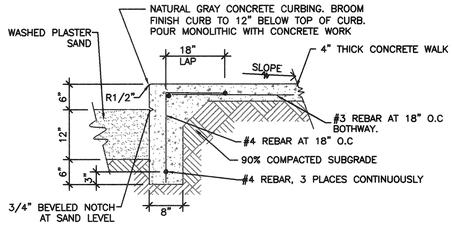

SAND AREA CURB AT SIDEWALK (A)

NOT TO SCALE

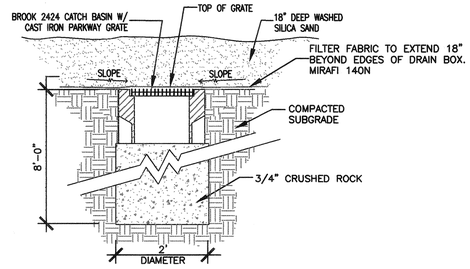

SAND PLAY AREA SUMP (B)

NOT TO SCALE

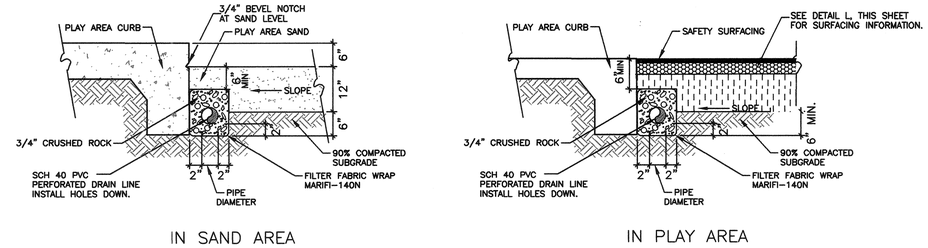

DRAIN AT SAND AND PLAY AREAS (C)

NOT TO SCALE

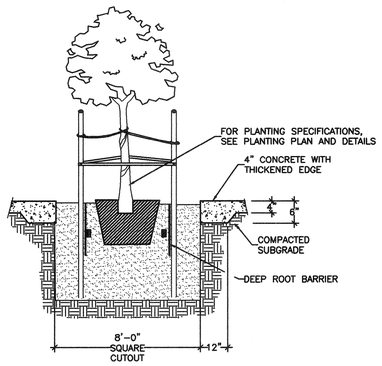

THICKENED EDGE AT TREE WELL (D)

NOT TO SCALE

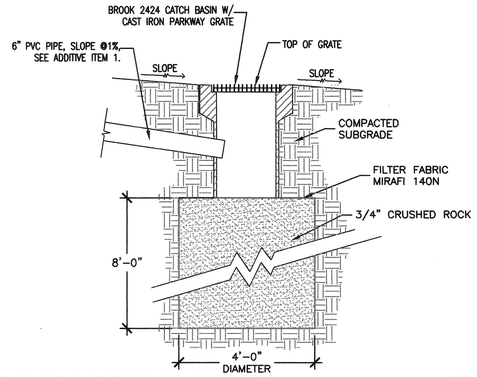

SUMP-ADDITIVE ITEM #1 (E)

NOT TO SCALE

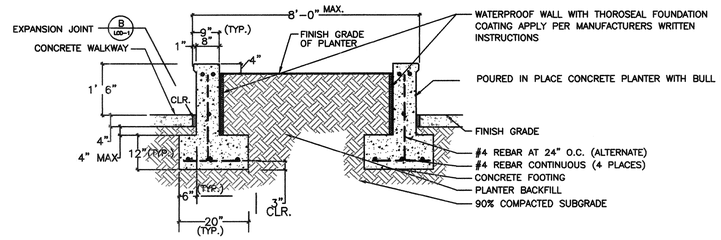

RAISED PLANTER SEAT WALL (F)

NOT TO SCALE

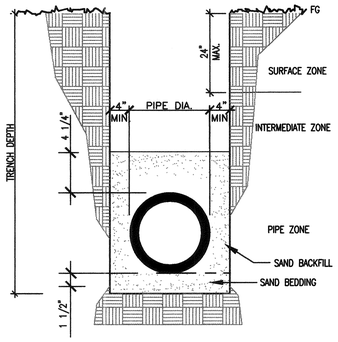

PIPE ZONE– THE PIPE SHALL BE BED ON A MINIMUM OF 4" OF SAND TO PROVIDE A FIRM AND UNIFORM BEARING THROUGHOUT THE ENTIRE LENGTH OF PIPE. THE REMAINING PORTION OF BACKFILL IN THIS ZONE SHALL BE OF SAND, FREE FROM LARGE STONES OR LUMPS, AND THOROUGHLY COMPACTED BY FLOODING OR TAMPING BEFORE ADDITIONAL BACKFILL IS PLACED THEREON.

INTERMEDIATE ZONE– AFTER COMPACTION OF THE PIPE ZONE, BACKFILLING MAY PROCEED IN LIFTS NOT TO EXCEED 6" IN HEIGHT. BACKFILL IN THIS ZONE SHALL BE FREE OF LUMPS AND CLODS, OR OTHER DELETERIOUS MATERIALS, AND COMPACTED BY FLOODING, JETTING OR MECHANICAL COMPACTION TO WITHIN 2' OF THE SURFACE TO A RELATIVE COMPACTION OF 90%.

SURFACE ZONE– COMPACTION OF THIS ZONE SHALL BE PERFORMED BY MECHANICAL METHODS TO PROVIDE A RELATIVE COMPACTION OF 95% WHERE IT PASSES UNDER HARDSCAPE AND 90% IN LANDSCAPE AREAS.

DRAINLINE TRENCHING (I)

NOT TO SCALE

NOT USED (G)

NOT TO SCALE

NOT USED (H)

NOT TO SCALE

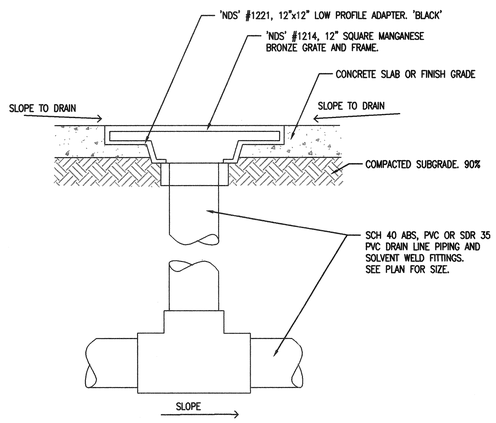

AREA DRAIN (J)

NOT TO SCALE

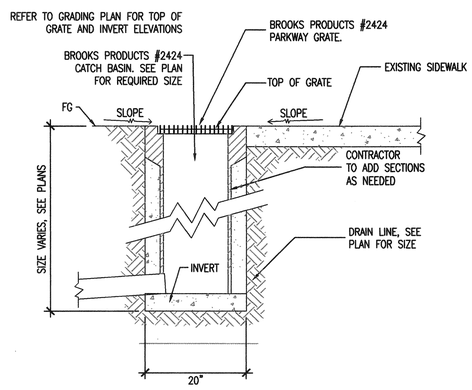

CATCH BASIN-HIGHLAND ADDITIVE #2 (K)

NOT TO SCALE

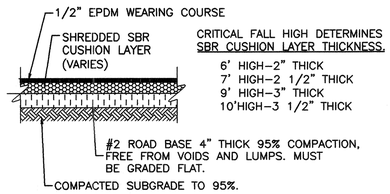

CRITICAL FALL HIGH DETERMINES SBR CUSHION LAYER THICKNESS.

6' HIGH–2" THICK
7' HIGH–2 1/2" THICK
9' HIGH–3" THICK
10'HIGH–3 1/2" THICK

POUR IN PLACE SAFETY SURFACING (L)

NOT TO SCALE

Hirsch & Associates Inc.
Landscape Architecture
Park Planning & Design
Project Management
2221 E. WINSTON RD. SUITE A
ANAHEIM, CALIFORNIA 92806
PHONE (714)776-4340 FAX (714)776-4395
A S L A

Project;

CITY OF RIVERSIDE
PLAY AREA RENOVATIONS

LICENSED LANDSCAPE ARCHITECT
PATRICK L. HIRSCH
1710
8-30-01
STATE OF CALIFORNIA

Date; 8-30-01
Design; P. HIRSCH
Job No; 0015

Description;

CONSTRUCTION DETAILS

DRAWING
LCD-2
SHEET 32 OF 34

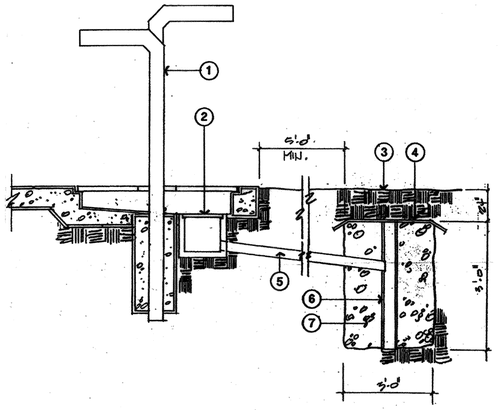

LEGEND N.T.S.

1. DRINKING FOUNTAIN PER DETAIL "H", THIS SHEET.
2. CATCH BASIN PER SPECS.. WITH PARKWAY GRATE.
3. FINISH GRADE.
4. TREVIRA SPUN BOUND FABRIC.
5. 3" DIAMETER SCH. 40 PVC DRAIN PIPE. SLOPE 2% TO SUMP.
6. 4" DIAMETER NON-METALLIC PERFORATED DRAIN PIPE.
7. 3/4" DIAMETER DRAIN ROCK SUMP, 1 CU.YD.

NOT USED

NOT TO SCALE **A**

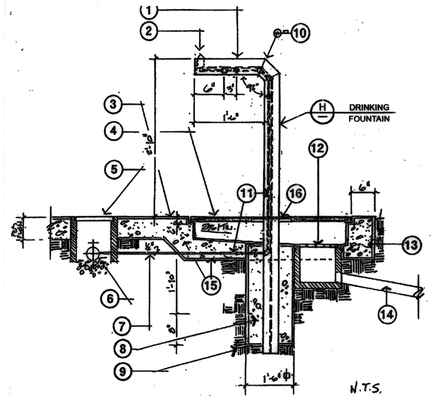

1. W6 "H" COLUMN - 15 LBS./FT. 6" DEPTH X 6" WIDTH - HOT DIP GALV. AFTER FABRICATION.
2. SEE DETAIL "E", THIS SHEET FOR BUBBLER GUARD & PIPING.
3. CONCRETE PAVING PER PLAN.
4. INSTALL TREE GRATE PER DETAIL "G" THIS SHEET.
5. SQUARE GATE VALVE BOX INSCRIBED "WATER" PER SPECS.
6. BALL VALVE PER SPECS.
7. 1/2" TYPE K COPPER PIPE.
8. CONCRETE FOOTING.
9. COMPACTED EARTH.
10. NOT USED.
11. 1/2" GALV. PIPE.
12. CATCH BASIN PER SPECS. WITH PARKWAY GRATE.
13. CONCRETE WALK. EXTEND DEPTH AS REQUIRED TO FORM BASIN AROUND CATCH BASIN.
14. 3" DIAMETER SCH. 40 PVC DRAIN PIPE TO SUMP. SLOPE 2% MIN.
15. THICKEN EDGE OF CONCRETE WALK AS REQUIRED & PROVIDE 3-1/2" THICK PAVED BOTTOM. SLOPE TO DRAIN TO CATCH BASIN.
16. STEEL COLLAR PER DETAIL "F", THIS SHEET.

NOTE

1. ALL PIPE DOWNSTREAM OF GATE VALVE AND BELOW CONCRETE SHALL BE COPPER TYPE K. ALL EXPOSED PIPE SHALL BE GALV. PIPE.
2. GRIND ALL WELDS SMOOTH AND HOT DIP GALV. FRAME AFTER ALL FABRICATION.
3. SEE DETAIL "G", THIS SHEET FOR PLAN VIEW.

DRINKING FOUNTAIN SUMP

NOT TO SCALE **B**

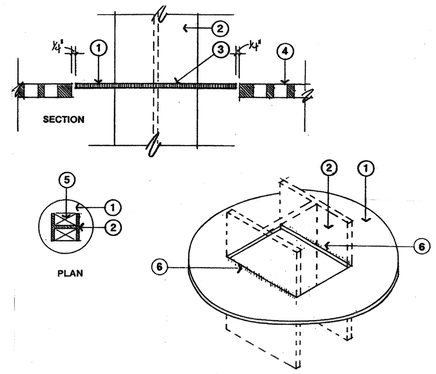

LEGEND N.T.S.

1. 1/2" THICK, ROUND STEEL PLATE COLLAR, 1/2" LESS IN DIAMETER THAN TREE GRATE OPENING. TOP OF PLATE SHALL MATCH TOP OF ADJACENT TREE GRATE ON HIGH SIDE. WELD PLATE LEVEL.
2. W6 "H" FOUNTAIN COLUMN.
3. CONTINUOUS FILLET WELD TOP AND BOTTOM , ALL SIDES.
4. TREE GRATE.
5. OPEN ON EACH SIDE OF "H" TO ALLOW DRAINAGE AND INSTALLATION OF PLUMBING.
6. WELD TOP AND BOTTOM.

DRINKING FOUNTAIN FABRICATION

NOT TO SCALE **C**

BASE COLLAR FABRICATION

NOT TO SCALE **D**

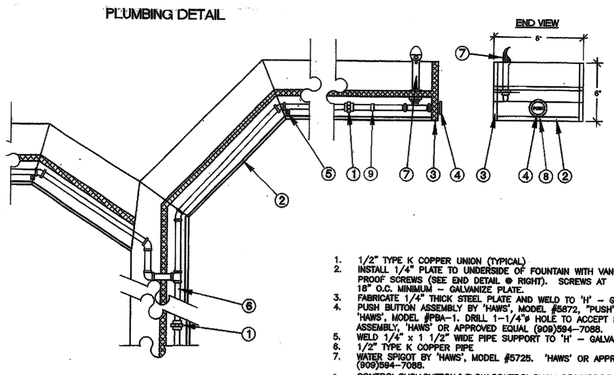

1. 1/2" TYPE K COPPER UNION (TYPICAL)
2. INSTALL 1/4" PLATE TO UNDERSIDE OF FOUNTAIN WITH VANDAL PROOF SCREWS (SEE END DETAIL ⊕ RIGHT). SCREWS AT 18" O.C. MINIMUM – GALVANIZE PLATE.
3. FABRICATE 1/4" THICK STEEL PLATE AND WELD TO 'H' – GALVANIZE
4. PUSH BUTTON ASSEMBLY BY 'HAWS', MODEL #5872, "PUSH" BUTTON 'HAWS', MODEL #PBA–1. DRILL 1–1/4"ø HOLE TO ACCEPT PUSH BU ASSEMBLY, 'HAWS' OR APPROVED EQUAL (909)594–7088.
5. WELD 1/4" x 1 1/2" WIDE PIPE SUPPORT TO 'H' – GALVANIZED.
6. 1/2" TYPE K COPPER PIPE
7. WATER SPIGOT BY 'HAWS', MODEL #5725. 'HAWS' OR APPROVED EQ. (909)594–7088.
8. CONTROL PUSH BUTTON & FLOW CONTROL SHALL BE MURDOCK SELF-CLOSING PUSH BUTTON WITH VANDAL GUARD ⊕ PIERCE & ASSOC. (800) 750-4442. BUTTON BODY, 1-1/4" DIAMETER HOLE. GUARD 2 NO. 25 PILOT HOLE & 10/24" TAP IN FLANGE.
9. 1/2" INLINE FILTER W/ SHUTOFF & 150 MESH ELEMENT W/ FLUSH CAPABILITY. AGRIFIM MODEL IS 50, (800)688-8108. PROVIDE ALL NECESSARY ADAPTERS AND FITTINGS FOR COMPLETE INSTALLATION.

PLUMBING DETAIL

NOT TO SCALE **E**

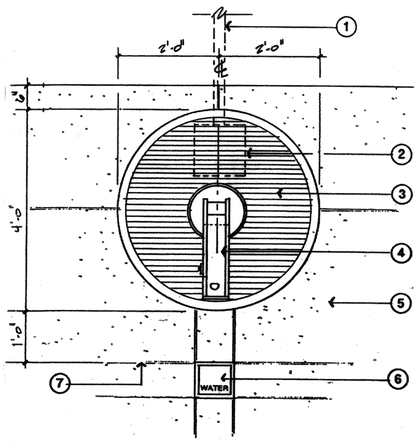

LEGEND N.T.S.

1. 3" DIAMETER PVC DRAIN PIPE TO SUMP, BELOW GRADE. (SEE DETAIL "H", THIS SHEET).
2. CATCH BASIN PER SPECS. INSTALL PER DETAIL 'D' THIS SHEET.
3. TREE GRATE PER SPECIFICATIONS. INSTALL PER DETAIL 'L' THIS SHEET.
4. WATER FOUNTAIN.
5. CONCRETE PAVING PER PLAN.
6. BALL VALVE IN SQUARE VALVE BOX PER SPECS..
7. CRACK CONTROL JOINT PER PLAN.

PLAN VIEW

NOT TO SCALE **F**

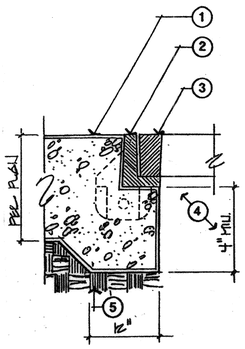

LEGEND

1. CONCRETE PAVING PER PLANS. THICKEN EDGE ⊕ TREE WELL LOCATIONS
2. TREE GRATE ANGLE FRAME PER SPECS.
3. TREE GRATE PER SPECS.
4. TREE WELL OR FOUNTAIN WELL.
5. COMPACTED EARTH.

N.T.S.

TREE GRATE

NOT TO SCALE **G**

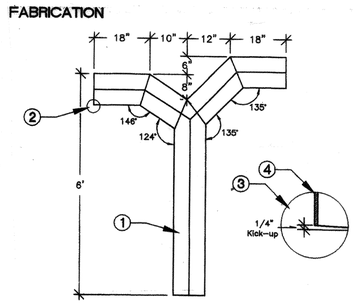

1. W6 COLUMN 15 LBS/FT, GALVANIZED 6" HEIGHT x 6" WIDTH
2. SEE ENLARGEMENT FOR KICK–UP DETAIL
3. KICK–UP 1/4" DURING FABRICATION TO PROVIDE SLOPE FOR POSITIVE DRAINAGE TO SUMP
4. 1/4" STEEL PLATE, WELD TO ENDS OF "H"

NOTE: CONSTRUCTION NOTES ARE TYPICAL FOR BOTH SIDES OF DRINKING FOUNTAIN

HI-LOW FABRICATION

NOT TO SCALE **H**

Hirsch & Associates Inc.
Landscape Architecture
Park Planning & Design
Project Management
2221 E. WINSTON RD. SUITE A
ANAHEIM, CALIFORNIA 92806
PHONE (714)776-4340 FAX (714)776-4395
A S L A

Project;

CITY OF RIVERSIDE
PLAY AREA RENOVATIONS

LICENSED LANDSCAPE ARCHITECT
PATRICK L. HIRSCH
1710
8-30-01
STATE OF CALIFORNIA

Date; 8-30-01
Design; P. HIRSCH
Job No; 0015

Description;

DRINKING FOUNTAIN FABRICATION

DRAWING
LCD-3
SHEET 33 OF 34

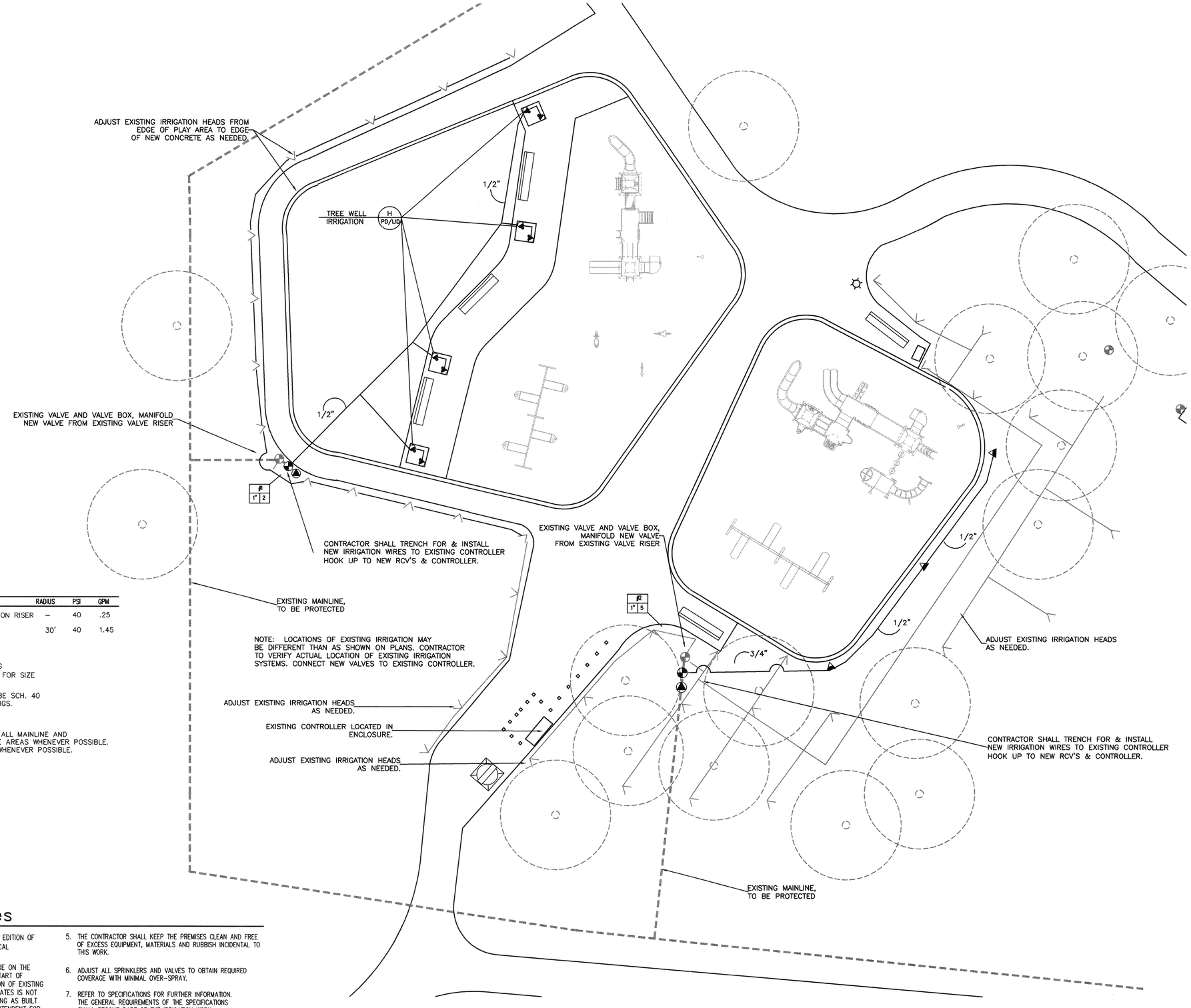

Irrigation Legend

SYMBOL	DESCRIPTION		RADIUS	PSI	GPM
	TORO FB-25-PC	BUBBLER ON RISER	–	40	.25
	TORO V-1550-4-L	ROTOR	30'	40	1.45
	RAINBIRD 1" QUICK COUPLER MODEL 44LVC				
	GRISWOLD MODEL 2280 PRESSURE REDUCING BRASS REMOTE CONTROL VALVE, SEE PLAN FOR SIZE				
	INTERMITTENT PRESSURE LATERAL LINE TO BE SCH. 40 PVC WITH SC. 40 PVC SOLVENT WELD FITTINGS.				
	SLEEVING TO BE SCH. 40 PVC				

NOTE: IRRIGATION PLAN IS DIAGRAMATICAL. ALL MAINLINE AND LATERAL LINE TO BE PLACED IN LANDSCAPE AREAS WHENEVER POSSIBLE. VALVES TO BE LOCATED IN SHRUB AREAS WHENEVER POSSIBLE.

#	CONTROLLER AND STATION NUMBER
1.5"	VALVE SIZE
29	GPM OF SYSTEM

EXISTING MAIN LINE
EXISTING LATERAL LINE
EXISTING REMOTE CONTROL VALVE
EXISTING IRRIGATION HEAD

Irrigation Notes

1. ALL WORK SHALL COMPLY WITH THE LATEST EDITION OF "UNIFORM PLUMBING CODE" AS WELL AS LOCAL ORDINANCES.
2. CONTRACTOR SHALL VERIFY STATIC PRESSURE ON THE SITE AT POINT OF CONNECTION PRIOR TO START OF WORK. CONTRACTOR SHALL VERIFY LOCATION OF EXISTING IRRIGATION MAIN LINE. HIRSCH AND ASSOCIATES IS NOT RESPONSIBLE FOR THE ACCURACY OF EXISTING AS BUILT PLANS. CONTACT CITY LANDSCAPE SUPERINTENDENT FOR VERIFICATION. ANY DISCREPANCY SHALL BE BROUGHT TO THE ATTENTION OF THE LANDSCAPE ARCHITECT.
3. INSTALL CONSTANT PRESSURE MAINLINE 24" INCHES BELOW FINISH GRADE AND 32" BELOW SUBGRADE OF STREETS AND/OR DRIVES.
4. INSTALL INTERMITTENT PRESSURE LATERAL LINE 18" BELOW FINISH GRADE AND 24" BELOW SUBGRADE OF STREETS AND/OR DRIVES.
5. THE CONTRACTOR SHALL KEEP THE PREMISES CLEAN AND FREE OF EXCESS EQUIPMENT, MATERIALS AND RUBBISH INCIDENTAL TO THIS WORK.
6. ADJUST ALL SPRINKLERS AND VALVES TO OBTAIN REQUIRED COVERAGE WITH MINIMAL OVER-SPRAY.
7. REFER TO SPECIFICATIONS FOR FURTHER INFORMATION. THE GENERAL REQUIREMENTS OF THE SPECIFICATIONS SHALL BECOME PART OF THE IRRIGATION WORK.

0" 10 20' 30'

Hirsch & Associates Inc.
Landscape Architecture
Park Planning & Design
Project Management
2221 E. WINSTON RD. SUITE A
ANAHEIM, CALIFORNIA 92806
PHONE (714)776-4340 FAX (714)776-4395
A S L A

Project;
CITY OF RIVERSIDE
HARRISON PARK
HARRISON ST. AND LINCOLN AVE.
RIVERSIDE, CALIFORNIA

LICENSED LANDSCAPE ARCHITECT
PATRICK L. HIRSCH
1710
8-30-01
STATE OF CALIFORNIA

Date; 8-30-01
Design; P. HIRSCH
Job No; 0015

Description;
LANDSCAPE IRRIGATION PLAN

Drawing
HA-LI
Sheet 14 Of 34

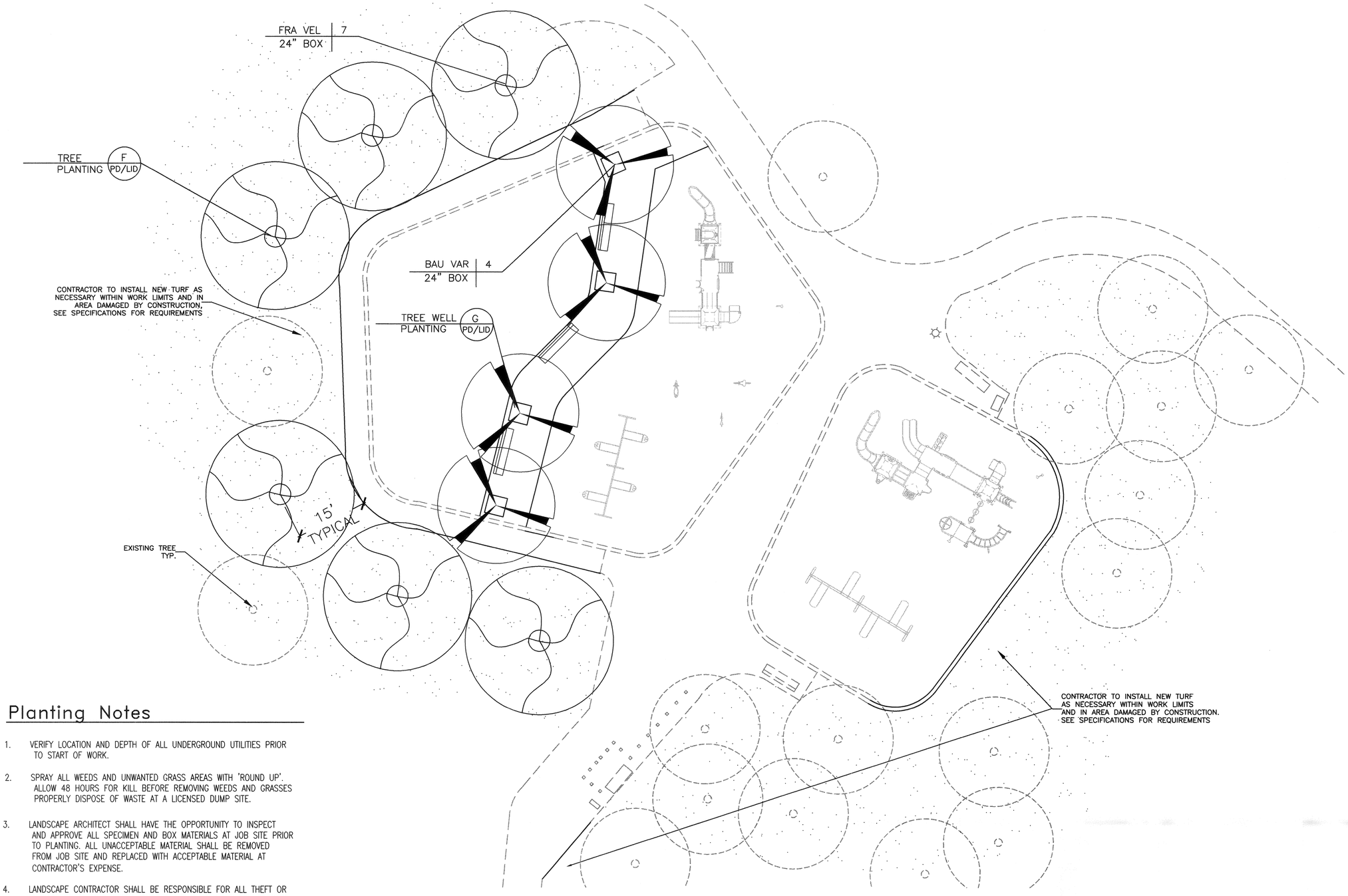

Planting Notes

1. VERIFY LOCATION AND DEPTH OF ALL UNDERGROUND UTILITIES PRIOR TO START OF WORK.
2. SPRAY ALL WEEDS AND UNWANTED GRASS AREAS WITH 'ROUND UP'. ALLOW 48 HOURS FOR KILL BEFORE REMOVING WEEDS AND GRASSES PROPERLY DISPOSE OF WASTE AT A LICENSED DUMP SITE.
3. LANDSCAPE ARCHITECT SHALL HAVE THE OPPORTUNITY TO INSPECT AND APPROVE ALL SPECIMEN AND BOX MATERIALS AT JOB SITE PRIOR TO PLANTING. ALL UNACCEPTABLE MATERIAL SHALL BE REMOVED FROM JOB SITE AND REPLACED WITH ACCEPTABLE MATERIAL AT CONTRACTOR'S EXPENSE.
4. LANDSCAPE CONTRACTOR SHALL BE RESPONSIBLE FOR ALL THEFT OR DAMAGE TO PLANT MATERIAL ONCE PLANT MATERIAL IS DELIVERED TO JOB SITE.
5. UPON COMPLETION OF PLANTING, THE CONTRACTOR SHALL ARRANGE FOR A SUBSTANTIAL COMPLETION INSPECTION BY LANDSCAPE ARCHITECT. CONTRACTOR SHALL CORRECT ANY DISCREPANCIES FOUND PRIOR TO FINAL INSPECTION AND ACCEPTANCE OF THE PROJECT.
6. UPON FINAL ACCEPTANCE OF THE WORK, THE CONTRACTOR SHALL SUBMIT TO OWNER SIGNED ORIGINALS OF ALL MATERIAL AND LABOR RELEASES.
7. A REPRESENTATIVE SAMPLE OF THE BOTANICAL NAME TAGS, FURNISHED BY THE NURSERY STOCK SUPPLIER, SHALL REMAIN ATTACHED TO THE PLANTS UNTIL FINAL INSPECTION.
8. SEE SPECIFICATIONS FOR SOIL PREPARATION AND BACKFILL MIXTURE.

Planting Legend

SYMBOL	ABBREVIATION	BOTANICAL NAME	COMMON NAME	SIZE
TREES				
	BAU VAR	BAUHINIA VARIEGATA	PURPLE ORCHID TREE	24" BOX
	FRA VEL	FRAXINUS VELUTINA 'Rio Grande'	FAN-TEX ASH	24" BOX
TURF				
		SEE SPECIFICATIONS FOR REQUIREMENTS		

0" 10 20' 30'

Hirsch & Associates Inc.
Landscape Architecture
Park Planning & Design
Project Management
2221 E. WINSTON RD. SUITE A
ANAHEIM, CALIFORNIA 92806
PHONE (714)776-4340 FAX (714)776-4395
A S L A

Project;
CITY OF RIVERSIDE
HARRISON PARK
HARRISON ST. AND LINCOLN AVE.
RIVERSIDE, CALIFORNIA

LICENSED LANDSCAPE ARCHITECT
PATRICK L. HIRSCH
5-31-03
8-30-01
STATE OF CALIFORNIA

Date; 8-30-01
Design; P. HIRSCH
Job No; 0015

Description;
LANDSCAPE PLANTING PLAN

Drawing
HA-LP
Sheet 15 Of 34