Shed and Fence Never Built from these Plans

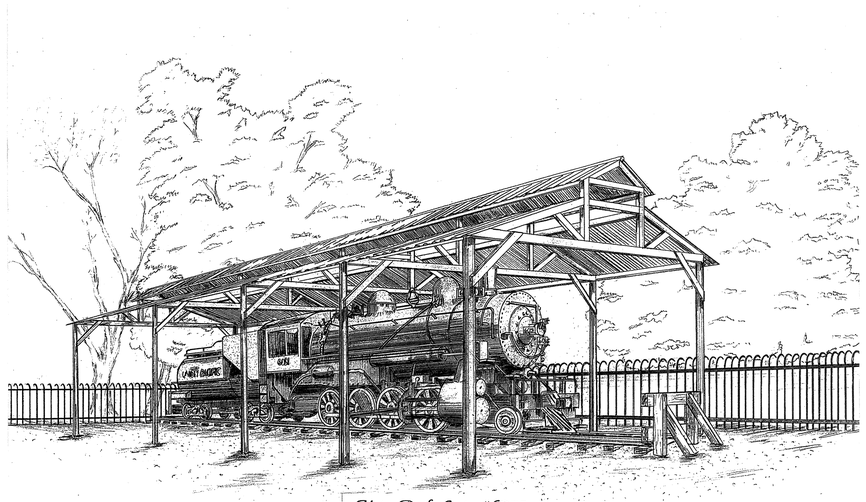

VICINITY MAP

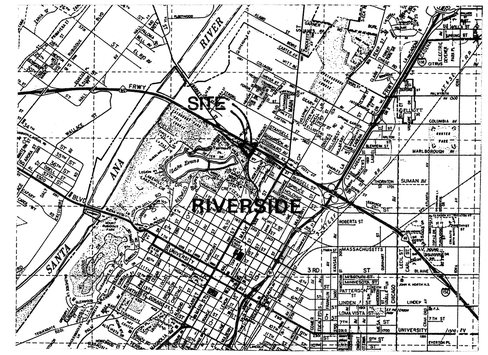

SITE LOCATION

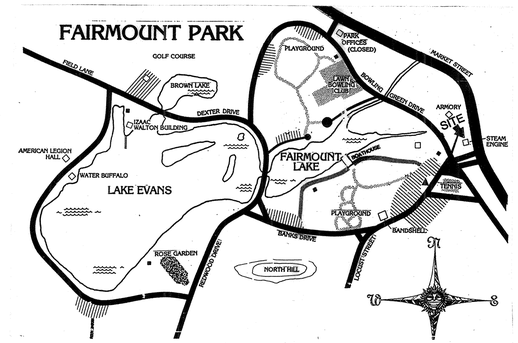

SHED FOR LOCOMOTIVE
at
FAIRMOUNT PARK

2500 FAIRMOUNT BLVD.
RIVERSIDE, CA.

INDEX

1.P-1 PLOT PLAN W/LANDSCAPE, FENCE LINE & PARKING

2.C-1 ROOF FRAMING PLAN, SECTIONS A-A&B-B, RAFTER TO BEAM MID-SPAN

3.C-2 BRACKET DETAILS

4.C-3 DETAILS

CODE REQUIRMENTS

1. OCCUPANCE: GROUP U.

PLANS PREPARED BY
BOB STEWART
DRAFTING & DESIGN
3830 JURUPA AVE.
RIVERSIDE CA. 92506
(909) 682-5400

ENGINEERING BY
HOMI FARAH, P.E.
CIVIL ENGINEER
1121 VISTA LOMAS
CORONA,CA. 91720
(909) 278-1757

Shed and Fence Never Built from these Plans

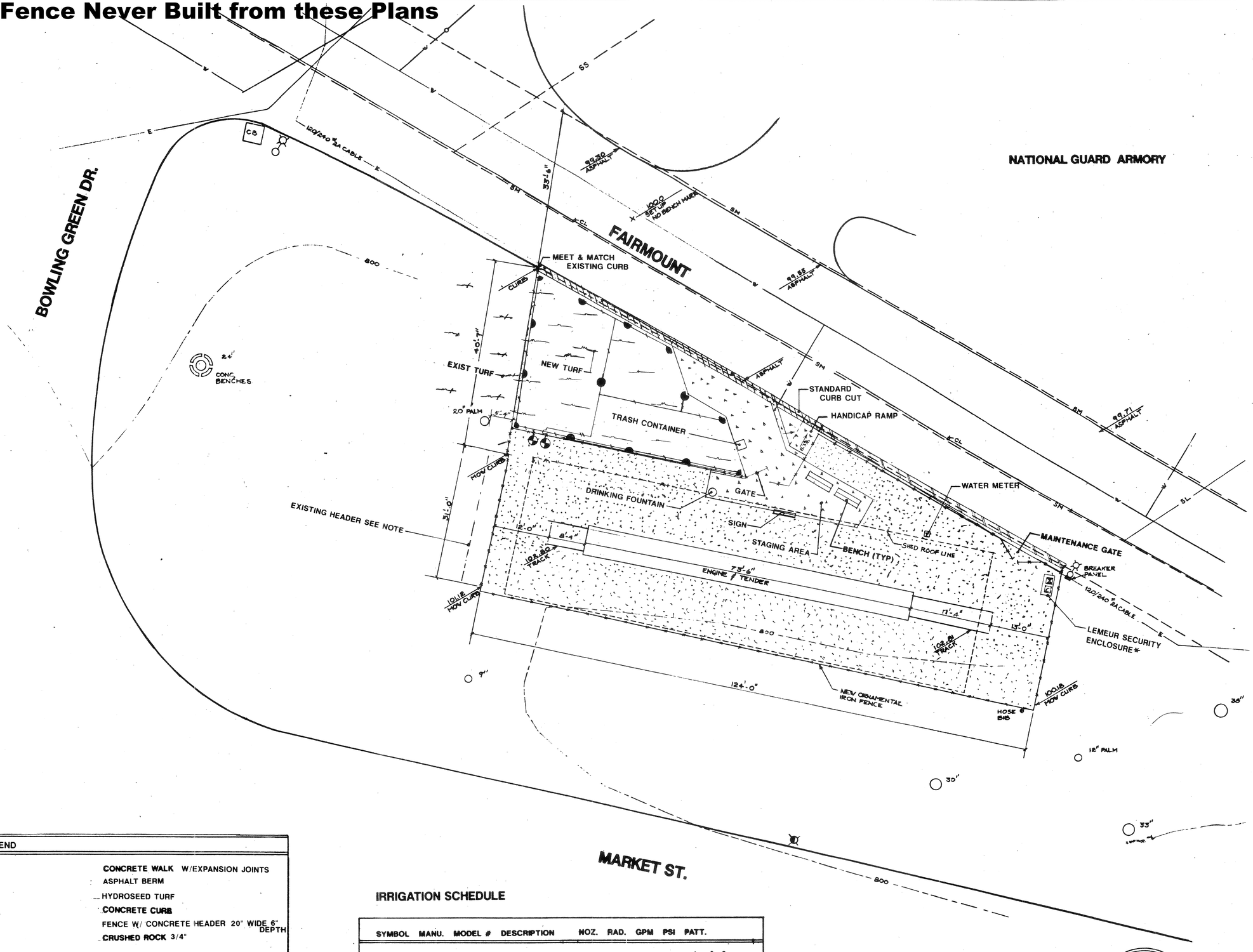

LEGEND	
	CONCRETE WALK W/EXPANSION JOINTS
	ASPHALT BERM
	HYDROSEED TURF
	CONCRETE CURB
	FENCE W/ CONCRETE HEADER 20" WIDE 6" DEPTH
	CRUSHED ROCK 3/4"

NOTE: ALL CONSTRUCTION TO MEET LOCAL BUILDING CODES & SPECIFICATIONS

CITY TO INDICATE TYPE OF MATERIAL TO BE PLACED, IF NOT INDICATED ON PLAN

SIGN PLACEMENT TOBE COORDINATED WITH CITY

REMOVE EXISTING HEADER- RELOCATE & ADD IRRIGATION HEADS AS REQUIRED

IRRIGATION SCHEDULE

SYMBOL	MANU.	MODEL #	DESCRIPTION	NOZ.	RAD.	GPM	PSI	PATT.
	TORO	S70Z	SPRAYHEAD	MPR	15'	4,2,1	40	360°,180°,90°
C	RAINBIRD	ICS-12B	ELECTRIC CONTROLLER(W/LEMEUR SECURITY ENCLOSURE*)					
	IRRIGATION VALVE							
	BACKFLOW PREVENTERS PLACE ONE FOR IRRIGATION & ONE FOR DOMESTIC WATER(*)							
	3/4" PVC SCHEDULE 40			1" PVC SCHEDULE 40				

LICENSED LANDSCAPE ARCHITECT
James Montgomery 1902
11-30-95
6-96
STATE OF CALIFORNIA

SCALE = 1"=10'

NORTH

LANDSCAPE & IRRIGATION DESIGN

LOCOMOTIVE
FAIRMOUNT PARK
2500 FAIRMOUNT BLVD.
RIVERSIDE, CA.

city of riverside
park & recreation
department
(714) 782-5223
3900 MAIN ST RIVERSIDE, CALIFORNIA 92522

revisions	by

date	
design	
drawn	AJM
check	
acc't. no.	
SHEET P-1	
1 of 4	

PRINTED ON CLEARPRINT 1000H

Shed and Fence Never Built from these Plans

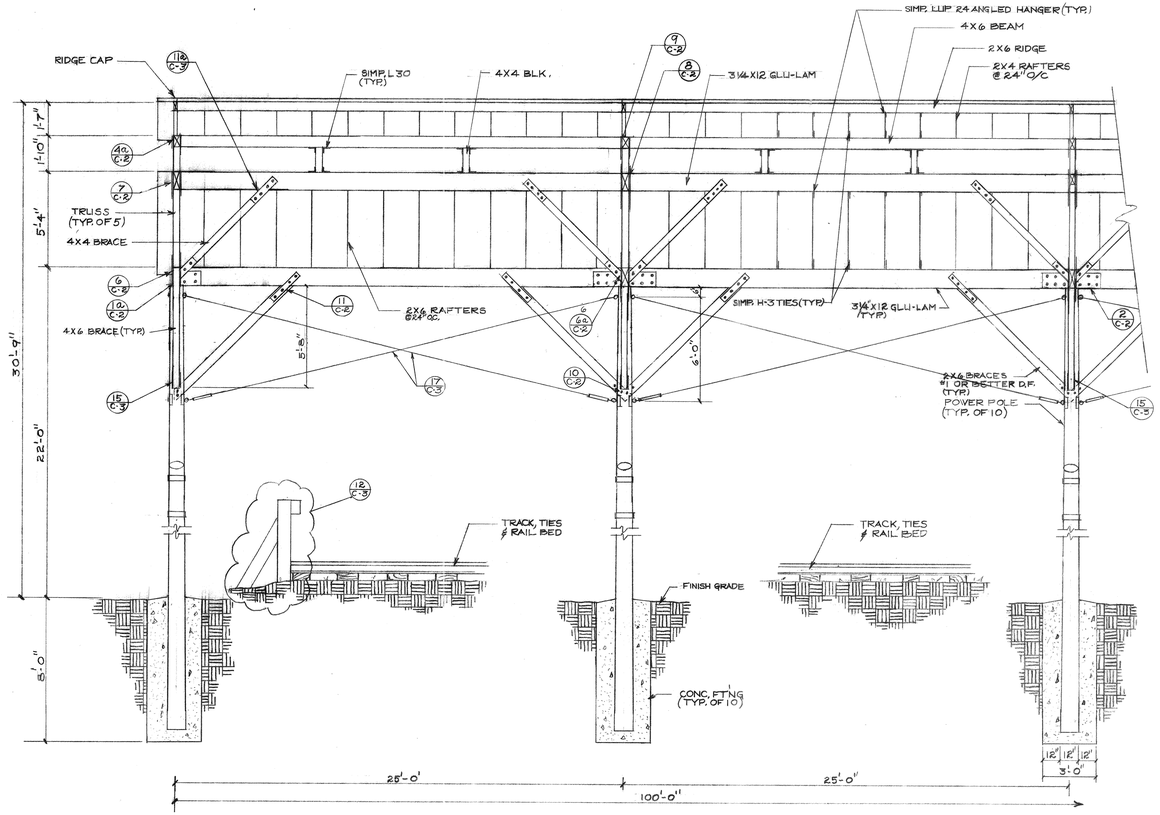

SECTION B-B

1/4" = 1'-0"

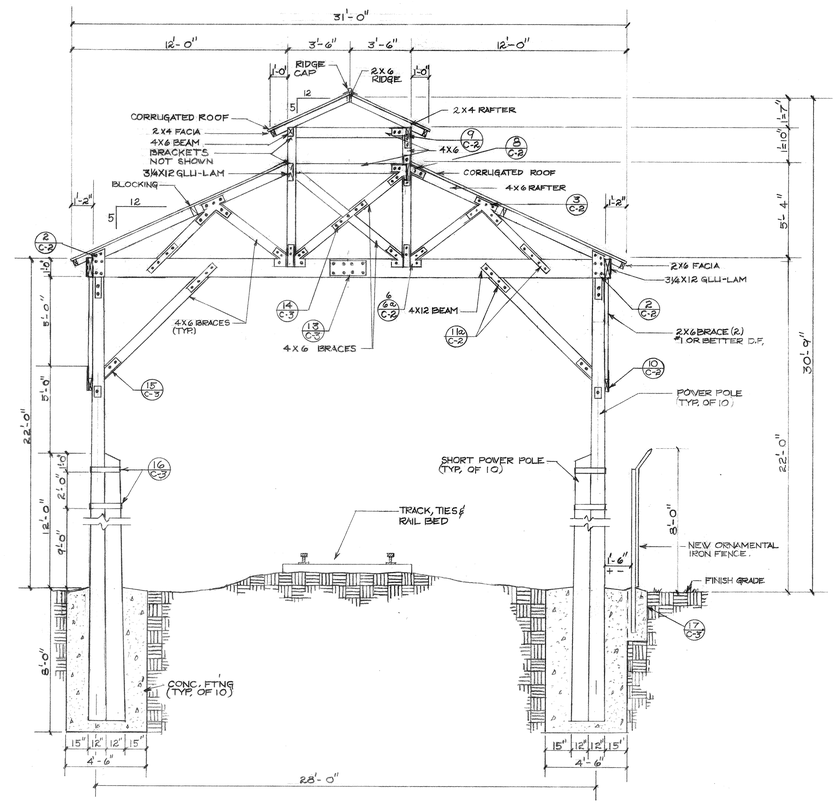

SECTION A-A

1/4" = 1'-0"

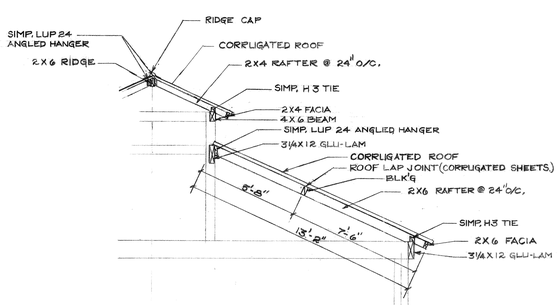

RAFTER TO BEAM - MID SPAN (C)

1/4" = 1'-0"

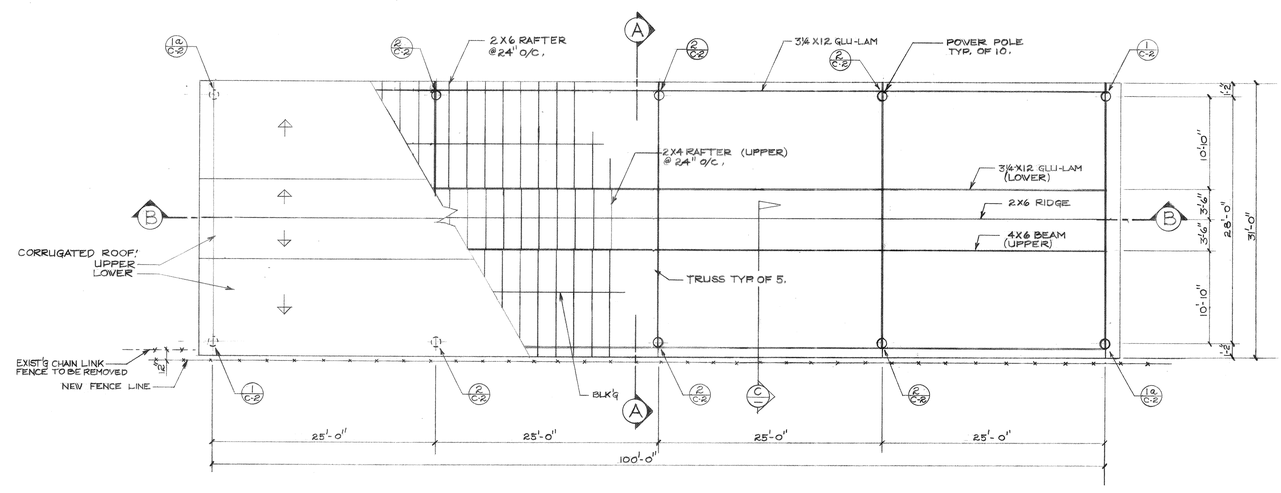

CORRUGATED STEEL ROOF:
1. SHEETS TO BE LAPPED @ ENDS A MIN. 6", SIDE LAPS SHT. TO SHT. TO BE 1½".
2. END LAPS OVER FACIA & END TRUSS 1½".
3. USE SELF TAPPING SCREWS W/NEOPRENE WASHERS.
4. FASTEN ONLY THROUGH CROWN OF CORRUGATION, SPACE SCREWS EVERY THIRD CORRUGATION, FOR SIDE LAP SCREWS SPACING TO BE 8" O/C.
5. ACID ETCH SHTS, BEFORE ATTACHING TO WOOD FRAME FOR AGED LOOK.

ROOF FRAMING PLAN

1/8" = 1'-0"

PLAN NORTH

RAFTER TO BEAM MID-SPAN
SECTIONS A-A &B-B
ROOF FRAMING PLAN

SHED FOR LOCOMOTIVE
at
FAIRMOUNT PARK
2500 FAIRMOUNT BLVD.
RIVERSIDE, CA.

city of riverside
park & recreation
department
(714) 782-5223
3900 MAIN ST RIVERSIDE, CALIFORNIA 92522

revisions	by

date	4.23.98
design	R.S.
drawn	R.S.
check	
acc't. no.	
SHEET	C-1
	2 of 4

PRINTED ON CLEARPRINT 1000H-

150023

Shed and Fence Never Built from these Plans

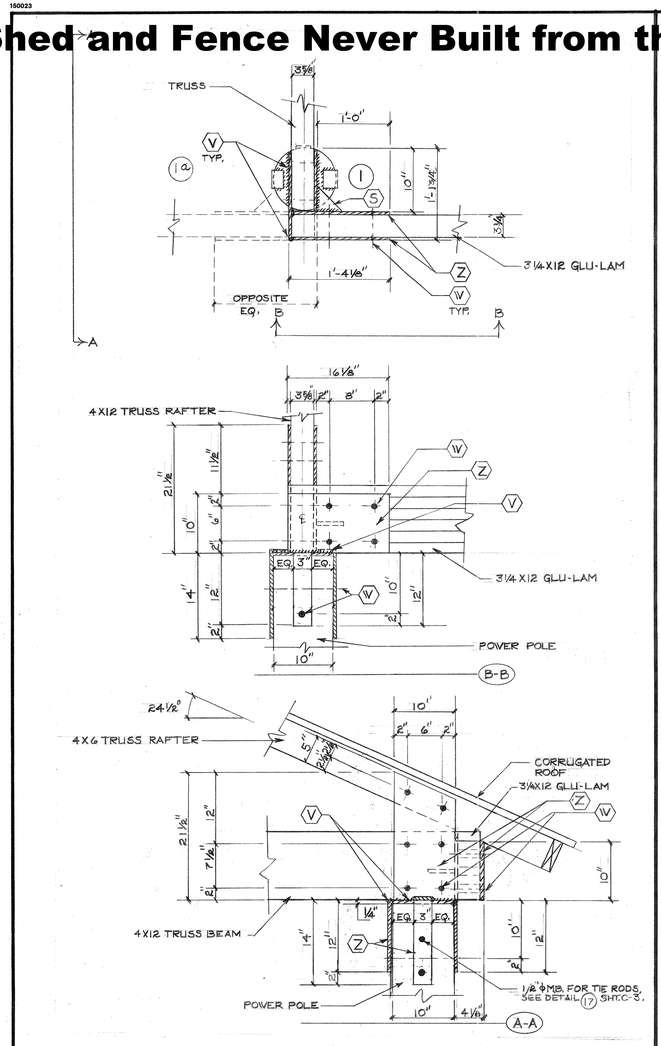

1 TRUSS TO POLE CORNER BRACKET

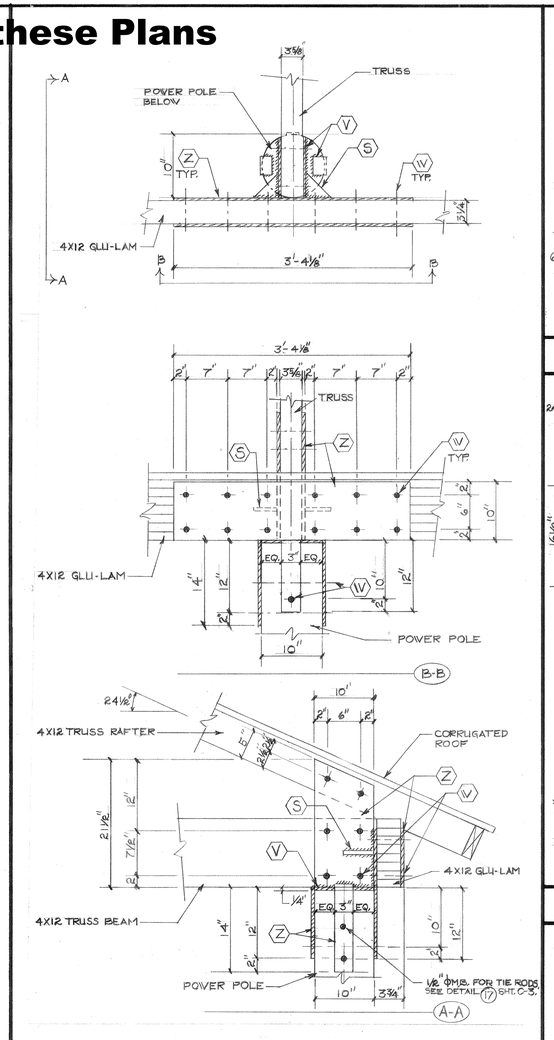

2 TRUSS TO POLE BRACKET MID SPAN

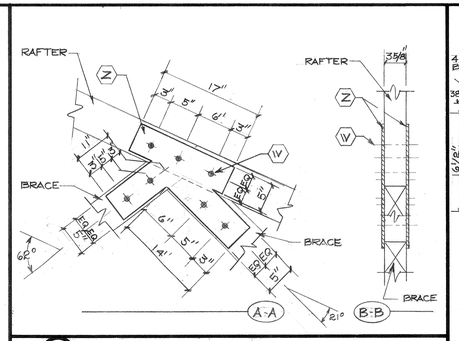

3 TRUSS BRACKET

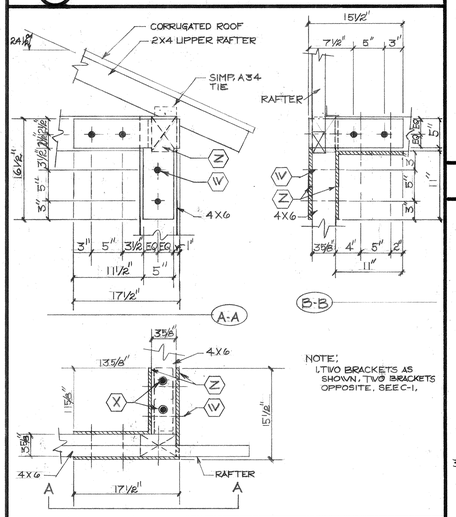

4 TRUSS CORNER BRACKET

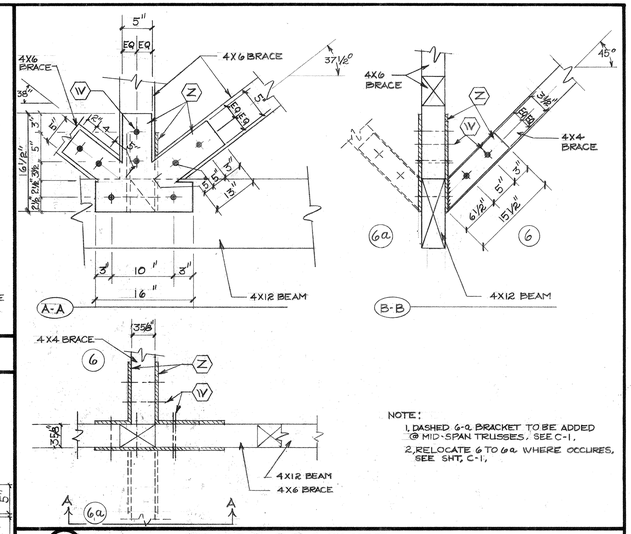

6 TRUSS BRACKET

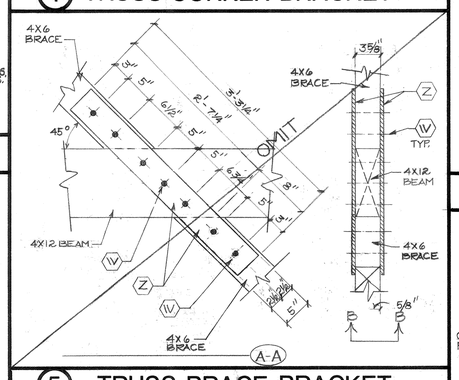

5 TRUSS BRACE BRACKET

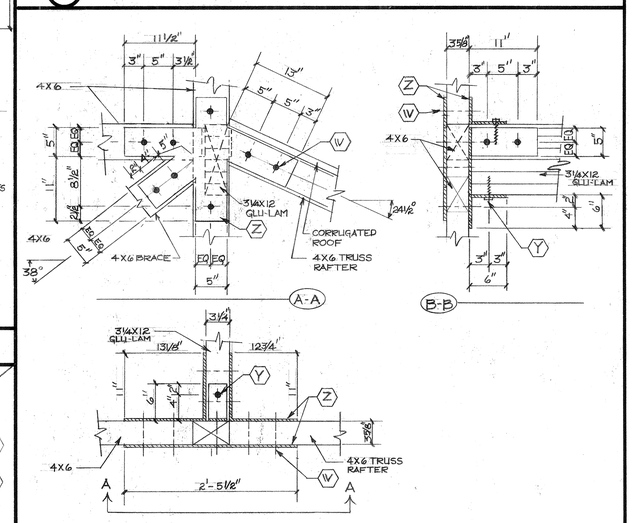

7 TRUSS BRACKET

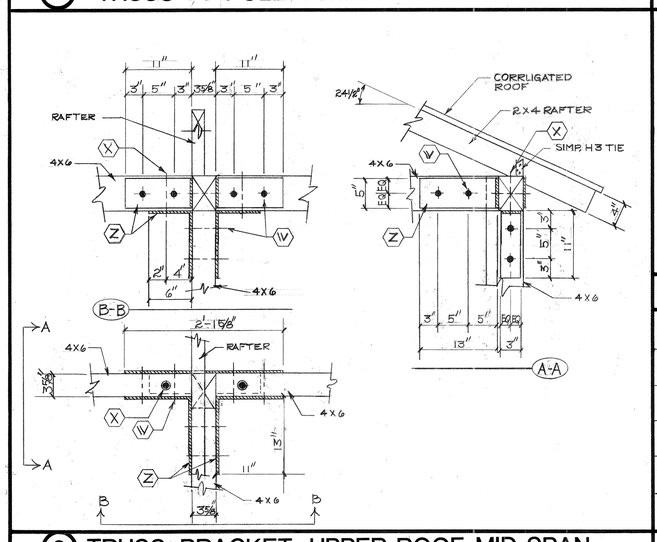

9 TRUSS BRACKET UPPER ROOF MID SPAN

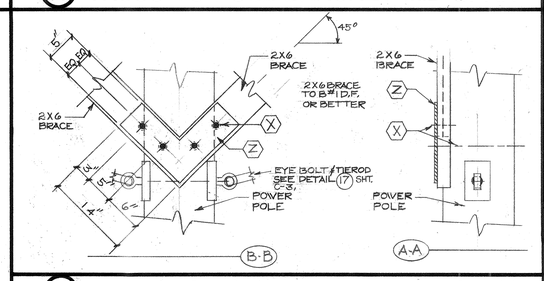

10 BRACE TO POLE BRACKET MID SPAN

S	1/4" STEEL GUSSET WELDED @ 6" HT, OF STEEL PLATE TYP. OF 2.
W	3/4" ΦM.B. W/NUT, MEASURE PLAN DETAIL FOR LENGTH.
X	3/4" Φ M.B. W/WASHER & NUT, MEASURE PLAN DETAIL FOR LENGTH.
Y	5/8" X 5" LAG SCREW.
Z	1/4" STEEL PLATE, A36, MEASURE PLAN DETAIL FOR LENGTH & WIDTH.

WELD SCHEDULE

V — 1/4 — WELD SYMBOL

NOTE:
1. BRACKETS THAT REQUIRE ANGLES OR FLATS TO BE ARC WELDED ON BOTH SIDES OF STEEL PLATES.
2. SPECIAL INSPECTIONS PER U.C.B. SEC. 1701 FOR ALL FIELD WELDING REQUIRED.
3. ALL BOLTS TO BE MIN. ASTM-A325 U.N.O.
4. ALL BOLTS THAT PASS THRU WOOD TO BE HOT DIP GALVANIZED.

LEGEND

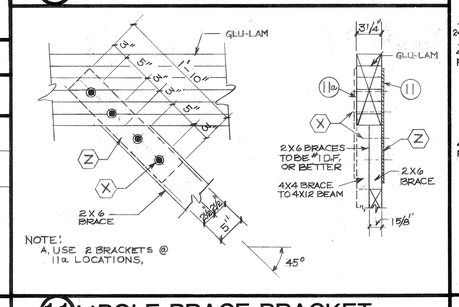

11(a) POLE BRACE BRACKET

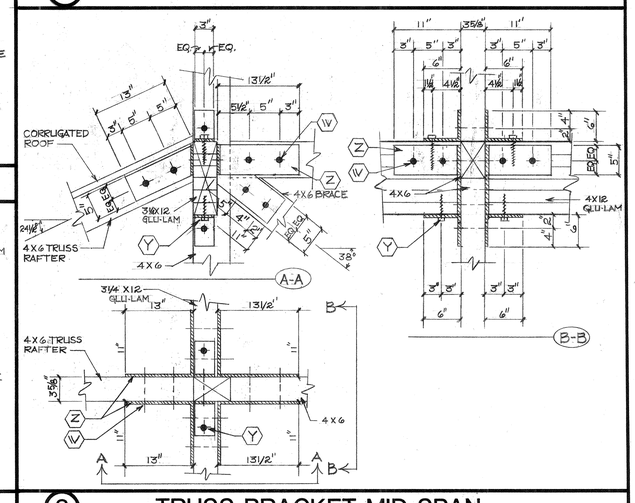

8 TRUSS BRACKET MID SPAN

BRACKET DETAILS

SHED FOR LOCOMOTIVE
at
FAIRMOUNT PARK
2500 FAIRMOUNT BLVD.
RIVERSIDE, CA.

city of riverside
park & recreation
department
(714) 782-5223
3900 MAIN ST RIVERSIDE, CALIFORNIA 92522

revisions	by

SCALE 1"=1'-0"

date	4.23.98
design	R.S.
drawn	R.S.
check	
acc't. no.	

SHEET C-2
3 of 4

150023

Shed and Fence Never Built from these Plans

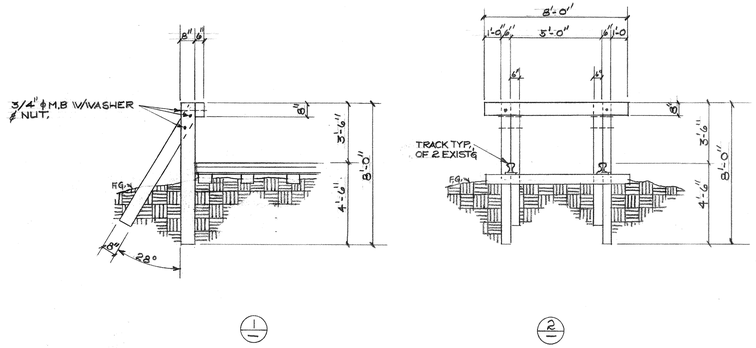

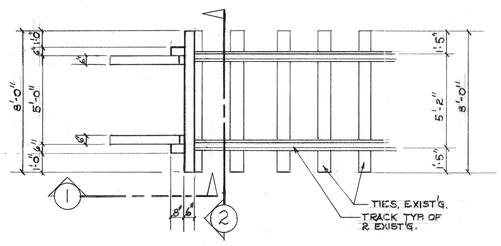

NOTE:
1. BUMPER TO BE CONSTRUCTED OF 6"X8"X8' RAILROAD TIES.

12 TRAIN BUMPER — 1/4"=1'-0"

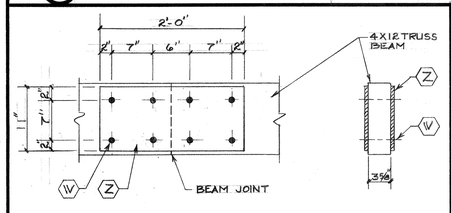

13 TRUSS BEAM BRACKET — 1"=1'-0"

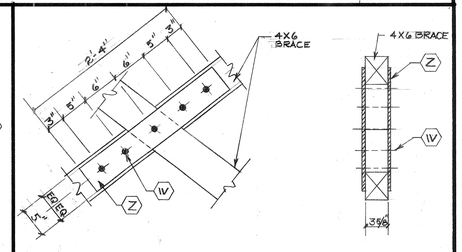

14 TRUSS BRACE BRACKET — 1"=1'-0"

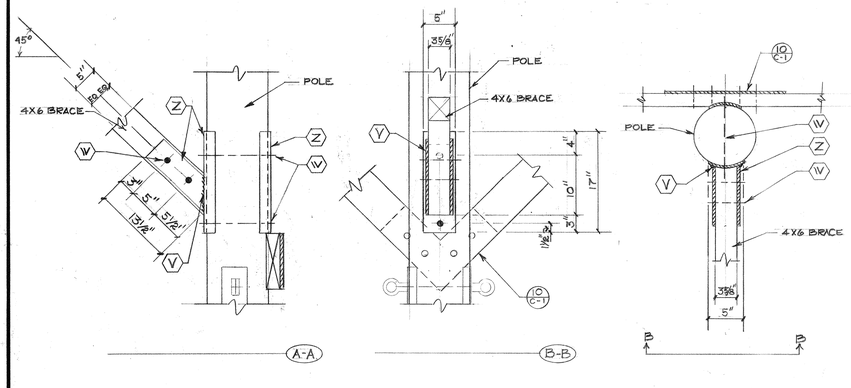

15 TRUSS BRACE TO POLE BRACKET — 1"=1'-0"

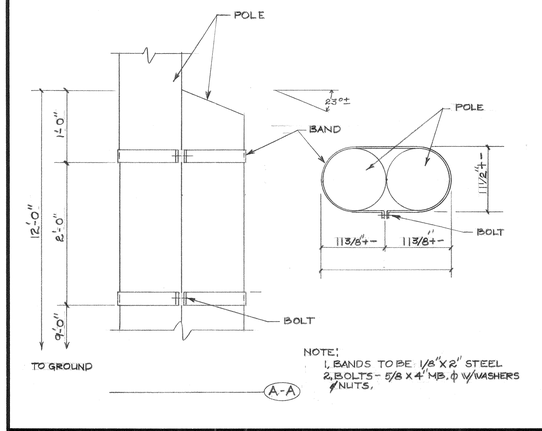

NOTE:
1. BANDS TO BE 1/8"X2" STEEL
2. BOLTS - 5/8 X 4" MB. ϕ W/WASHERS & NUTS.

16 POLE TO POLE BANDS — 1"=1'-0"

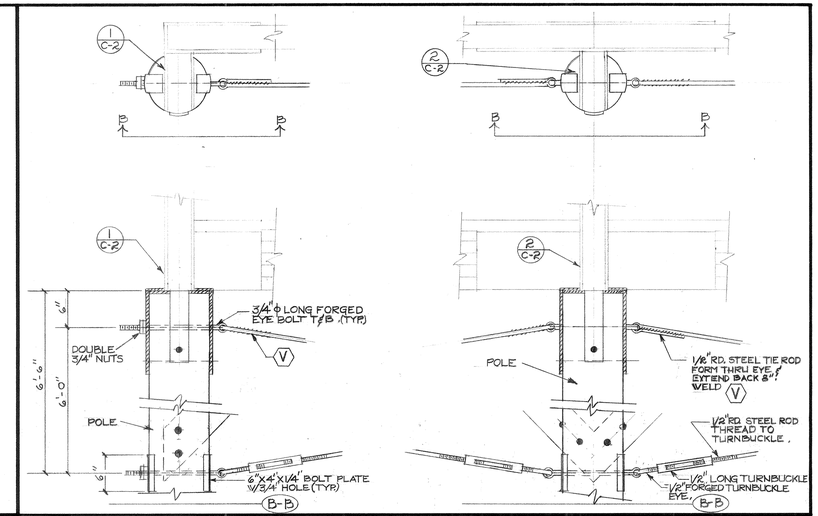

17 TIE RODS TO POLE — 1"=1'-0"

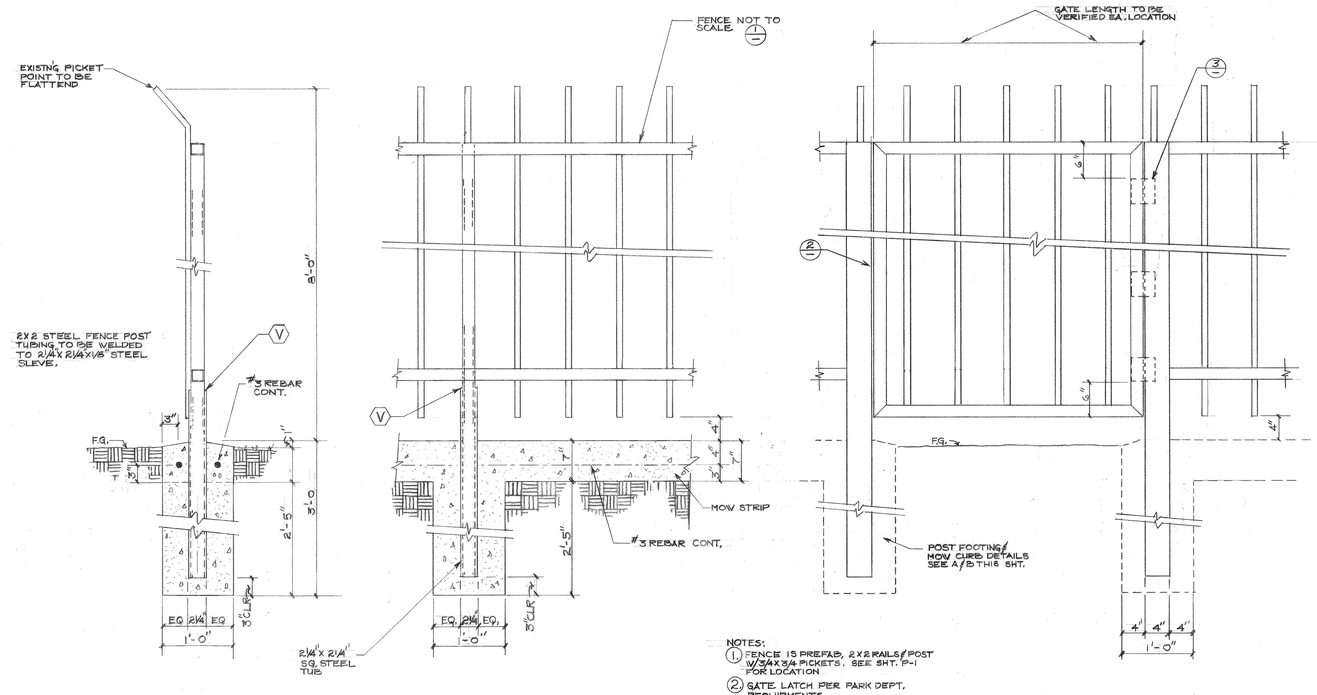

NOTES:
1. FENCE IS PREFAB, 2X2 RAILS & POST W/3/4X3/4 PICKETS. SEE SHT. P-1 FOR LOCATION
2. GATE LATCH PER PARK DEPT. REQUIRMENTS.
3. 3-2'X4' BUTT HINGES, 6" DN. TOP & 6" UP BOTTOM, MID ON CENTER. HINGES TO BE WELDED TO POSTS.

18 AREA ORNAMENTAL IRON FENCE & GATES — 1"=1'-0"

TRAIN BUMPER DETAIL
BRACKET DETAIL
FENCE & GATE DETAIL

SHED FOR LOCOMOTIVE
at
FAIRMOUNT PARK
2500 FAIRMOUNT BLVD.
RIVERSIDE, CA.

city of riverside
park & recreation
department
3900 MAIN ST RIVERSIDE, CALIFORNIA 92522
(714) 782-5223

revisions	by

date	4.23.98
design	R.S.
drawn	R.S.
check	
acc't.no.	
SHEET C-3	
4 of 4	