BOATHOUSE for FAIRMOUNT PARK

2707 LOCUST STREET, RIVERSIDE, CA

STATE GRANT NO. 88-1-33016

SHEET INDEX

SHT. NO.	DESCRIPTIONS
1	TITLE SHEET
ARCHITECTURAL:	
2	G-1 - GRADING PLAN - SITE UNDERGROUND PLAN.
3	C-1 - CONSTRUCTION SITE PLAN
4	A-1 - SITE PLAN
5	A-2 - LOWER LEVEL FLOOR PLAN
6	A-3 - SECOND FLOOR PLAN
7	A-4 - EAST ELEVATION, LIGHT COL., RESTROOM & SERVING AREA INTERIOR ELEVATIONS.
8	A-5 - EXTERIOR ELEVATIONS.
9	A-6 - SECTIONS A & C
10	A-7 - SECTIONS B, D & E, TRUSS ELEVATION.
11	A-8 - WALL SECTION DETAILS
12	A-9 - SECTIONS F,G,H & I
STRUCTURAL:	
13	S-1 - FOUNDATION PLAN
14	S-2 - SECOND FLOOR FRAMING PLAN.
15	S-3 - ROOF FRAMING PLAN.
16	S-4 - DETAILS
17	S-5 - DETAILS
ELECTRICAL:	
18	E-1 - ELECTRICAL-LOWER LEVEL
19	E-2 - ELECTRICAL-SECOND FLOOR
20	E-3 - ELECTRICAL-FIXTURE SCHEDULE
21	E-4 - UTILITY SITE PLAN
PLUMBING:	
22	P-1 - PLUMBING PLAN
MECHANICAL:	
23	M-1 - MECHANICAL PLAN
24	M-2 - MECHANICAL PLAN
LANDSCAPE:	
25	L-1 - PLANTING PLAN
26	L-2 - PLANTING & IRRIGATION DETAILS/ SPECIFICATIONS
27	I-1 - IRRIGATION PLAN

CODE REQUIREMENTS

SQUARE FOOTAGE:

LOWER LEVEL

Boat Storage	3,306.80 s.f.
Park Maintance	266.00 s.f.
Boat Rental	266.00 s.f.
	3,838.80 s.f.

Lease Space	488.00 s.f.
Support Rooms	858.80 s.f.
Meeting Rooms	1,960.00 s.f.
	3,306.80 s.f.
Total	7,145.60 s.f.

ZONING:

"O" Offical

CONSTRUCTION:

Type V Non-Rated

OCCUPANCY:

A-3

B-3

PARKING REQUIREMENT:

N/A

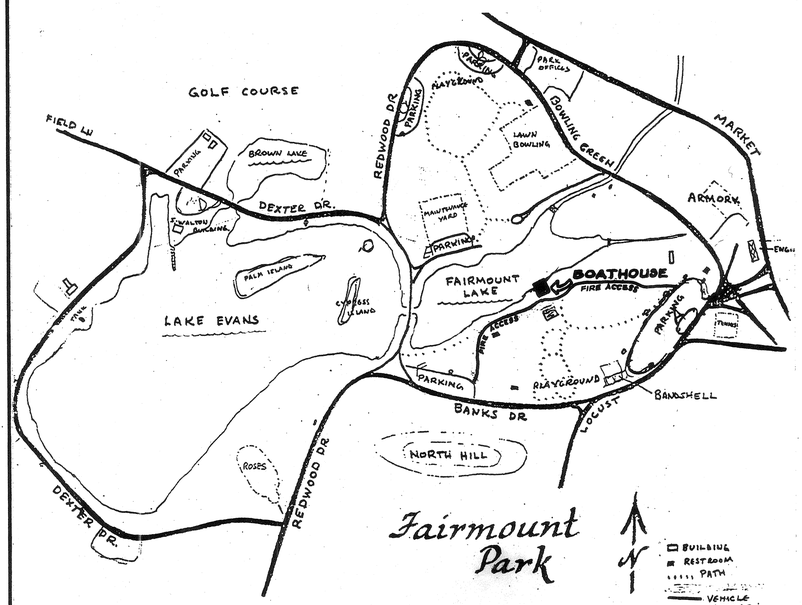

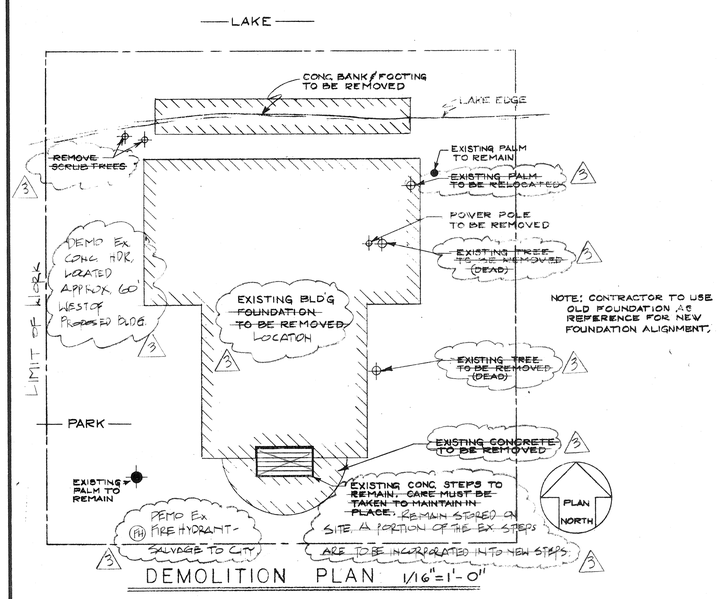

DEMOLITION PLAN 1/16"=1'-0"

PLAN APPROVED BY	
DIRECTOR, PARK & REC. DEPT.	DATE 4/7/93
PARK DESIGN	DATE April 7, 1993
PARK SUPERINTENDENT	DATE 4/7/93
	DATE
	DATE

MARCH 1, 1994

city of riverside park & recreation department

(714) 782-5300

3900 MAIN ST RIVERSIDE, CALIFORNIA 92522

Cole & Frick Architects, A.I.A.

4195 Chestnut Street
Riverside, California
92501 714/684-4011

BOATHOUSE for FAIRMOUNT PARK

CITY OF RIVERSIDE
PARKS & RECREATION DEPARTMENT

TITLE SHEET

REVISIONS
1 12-15-93

DRAWN BY
R.S.

DATE: 10/10/91
JOB NUMBER

SHEET NO. 1
OF 27

AS-BUILTS - BOATHOUSE

PLAN NO. P-6113

150023

GRADING NOTES

1. All grading shall conform to Chapter 70 of the current City-adopted edition of the Uniform Building Code.
2. All provisions of the preliminary soils report, Soil and Foundation Investigation prepared by John Byerly, Inc., dated May 5, 1985 ~~and the Recommendations for Building Site Preparation prepared by John Byerly, Inc. dated June 3, 1993,~~ shall be complied with during grading operations. City Business Tax Certificate No. 005463, Expiration Date 12/31/93.
3. This plan is for grading purposes only. Issuance of a permit based on this plan does not constitute approval of driveway locations or sizes, parking lot structural sections or layout, building locations, off-site drainage facilities or other items not related directly to the basic grading operation.
4. Certification from the registered architect stating that the grading has been completed per the approved plan, and a compaction report from the soil engineer for fill areas are required prior to building permits being issued.
5. Contractor is responsible for erosion, dust and temporary drainage control during grading operations.
6. Any on-site retaining walls shown on this plan that are under 3 feet in height and support a surcharge or that are over 3 feet in height require separate review, approval and a building permit from the Building Division, Planning Department. /Any necessary retaining walls on the perimeter of this site shall be in place and approved by the building inspector prior to issuance of the grading permit. Approved sequenced grading with 1 1/2:1 maximum slopes to within 2 feet of the adjacent property line may be acceptable to allow for issuance of a grading permit prior to completion of any necessary perimeter retaining walls.
7. The contractor is responsible for ensuring that retaining walls do not interfere with provision of utilities.
8. It is the grading contractor's responsibility to ensure that adequate compaction has been attained on the entire grading site, including fill areas outside the building pads and on all fill slopes.
9. It is the soil engineer's responsibility to observe and perform compaction tests during the grading to evaluate the preparation of the natural ground surface to receive the fill and the compaction attained in the fill, including fill areas outside the building pads and on all fill slopes.
10. Earthwork quantities are shown for grading permit purposes only, and the City of Riverside is not responsible for their accuracy.

CUT: 3,479 CUYD
FILL: 2,830 CUYD

NOTE: PROVIDE COFFERDAMS, DEWATER & OVER-EXCAVATE THE BUILDING SUBGRADE PER THE PROJECT SPECIFICATIONS

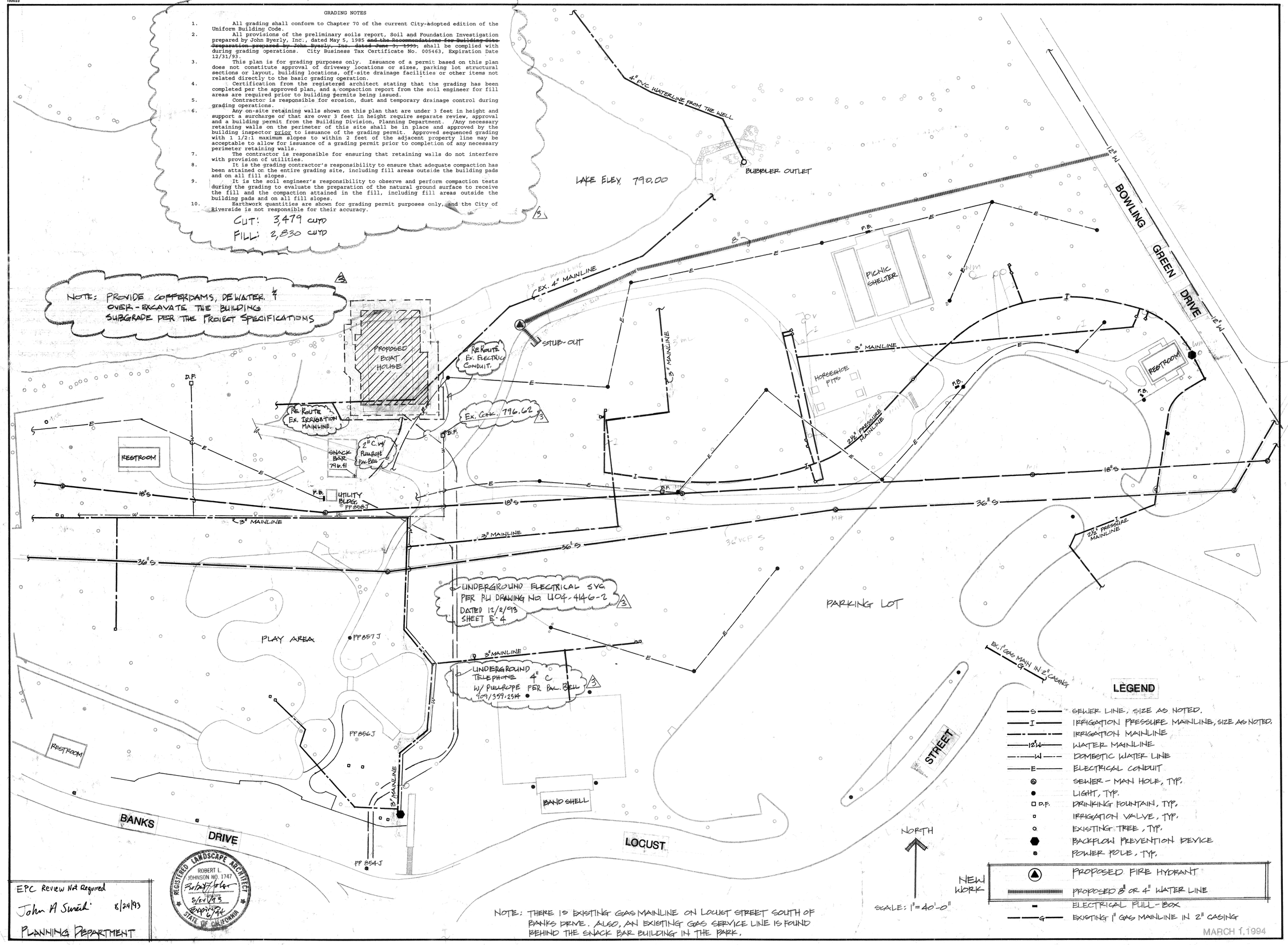

NOTE: THERE IS EXISTING GAS MAINLINE ON LOCUST STREET SOUTH OF BANKS DRIVE. ALSO, AN EXISTING GAS SERVICE LINE IS FOUND BEHIND THE SNACK BAR BUILDING IN THE PARK.

LEGEND

- S — SEWER LINE, SIZE AS NOTED.
- I — IRRIGATION PRESSURE MAINLINE, SIZE AS NOTED.
- IRRIGATION MAINLINE
- 12"W — WATER MAINLINE
- W — DOMESTIC WATER LINE
- E — ELECTRICAL CONDUIT
- SEWER - MAN HOLE, TYP.
- LIGHT, TYP.
- D.F. — DRINKING FOUNTAIN, TYP.
- IRRIGATION VALVE, TYP.
- EXISTING TREE, TYP.
- BACKFLOW PREVENTION DEVICE
- POWER POLE, TYP.

NEW WORK
- PROPOSED FIRE HYDRANT
- PROPOSED 8" OR 4" WATER LINE
- ELECTRICAL PULL-BOX
- G — EXISTING 1" GAS MAINLINE IN 2" CASING

EPC Review Not Required
John A Swick 8/24/93
PLANNING DEPARTMENT

REGISTERED LANDSCAPE ARCHITECT
ROBERT L. JOHNSON NO. 1747
8/24/93
EXPIRES 6/94
STATE OF CALIFORNIA

MARCH 1, 1994

BOATHOUSE for FAIRMOUNT PARK

GRADING PLAN for Underground Utility
SITE UNDERGROUND PLAN

city of riverside
park & recreation department
3900 MAIN ST RIVERSIDE, CALIFORNIA 92522
(714) 782-5223

revisions	by
5/24/93	AE
12/15/93	AE

date	3-25-93
design	
drawn	EL
check	
acc't. no.	

SHEET G-1 2 of 27

PLAN NO. P-0113

150023

LEGEND

- EXISTING LIGHT, TYP.
- EXISTING TREE, TYP.
- P.P. EXISTING POWER POLE, TYP.
- D.F. EXISTING DRINKING FOUNTAIN, TYP.
- F.H. PROPOSED FIRE HYDRANT, TYP.
- FIRE ACCESS ROUTE
- PROPOSED 8" WATER LINE FOR FIRE HYDRANT #1 (BASE BID)
- PROPOSED 4" WATER LINE FOR THE BOATHOUSE'S SPRINKER SYSTEM.

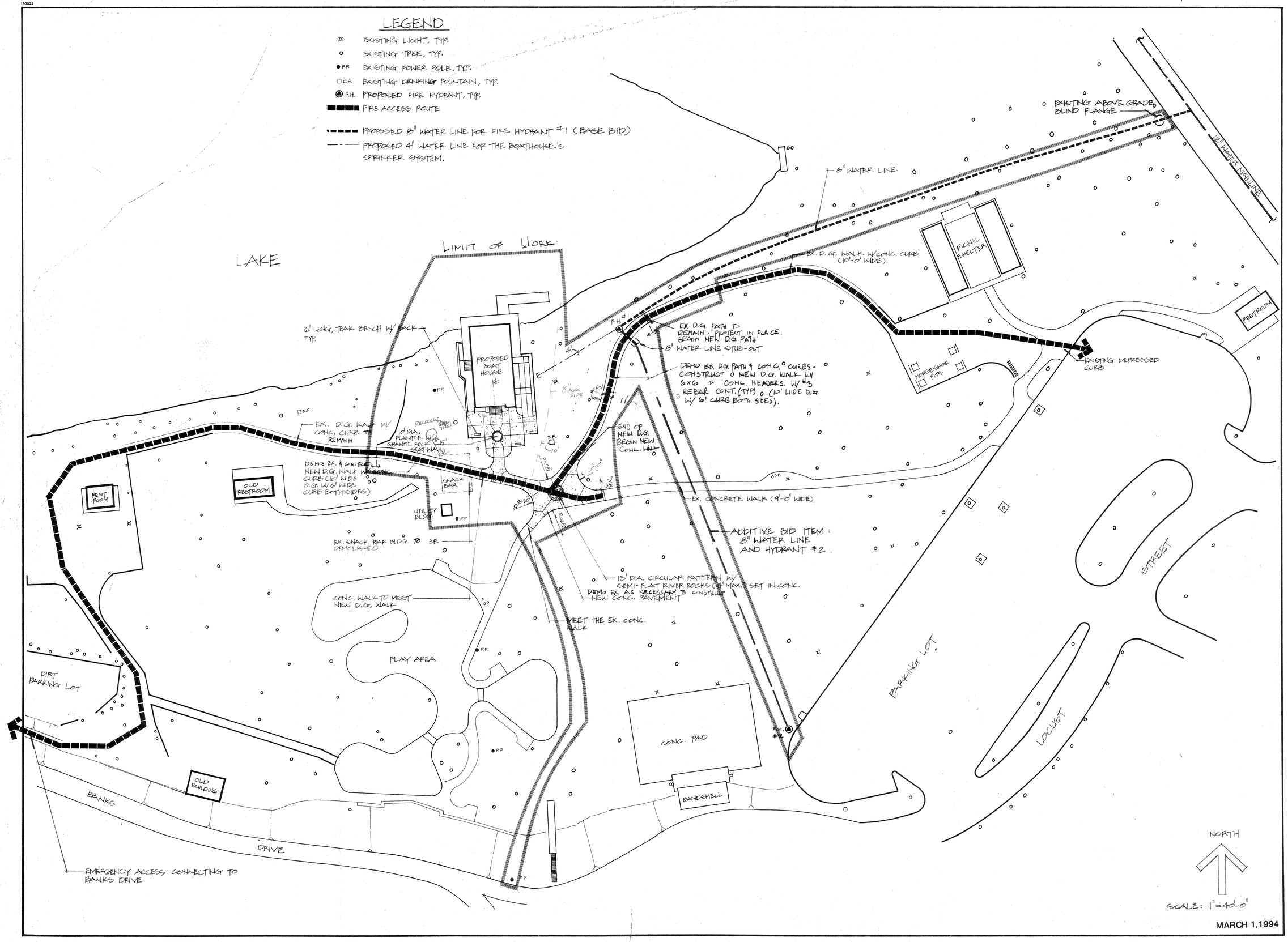

MARCH 1,1994

FAIRMOUNT PARK
SITE CONSTRUCTION PLAN
FIRE ACCESS PLAN

city of riverside
park & recreation department
3900 MAIN ST. RIVERSIDE, CALIFORNIA 92522
(714) 782-5223

revisions	by
2. 12.15.93	

date	10-19-93
design	
drawn	EL
check	
acc't.no.	
SHEET	C-1
	3 of 27

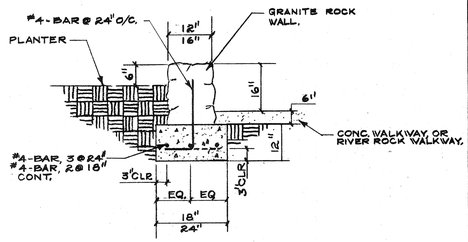

PLANTER WALL DETAIL (1 / A-1)

1/2" = 1'-0"

THE CONDUIT IS TO BE ROUTED AROUND THE PLAY AREA. NO CONDUITS, PIPING, OR OTHER UNDERGROUND UTILITIES ARE TO OCCUR WITHIN THE PLAY AREA. IT IS THE INTENT OF THE CITY TO ROUTE ALL ELECTRICAL BRANCH SERVICE CONDUIT PER THE PUBLIC UTILITIES DEPT. STANDARDS & TELEPHONE PER PACIFIC BELL STANDARDS, ALL UNDERGROUND TO EXISTING POLE # 854 J LOCATED NEAR BANKS DR. & IN COORDINATION W/ THE PARKS & RECREATION DEPT.

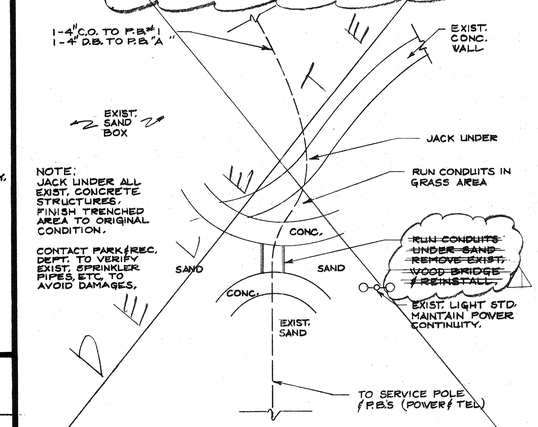

~~CONDUIT ROUTING @ SAND BOX AREA N.T.S.~~

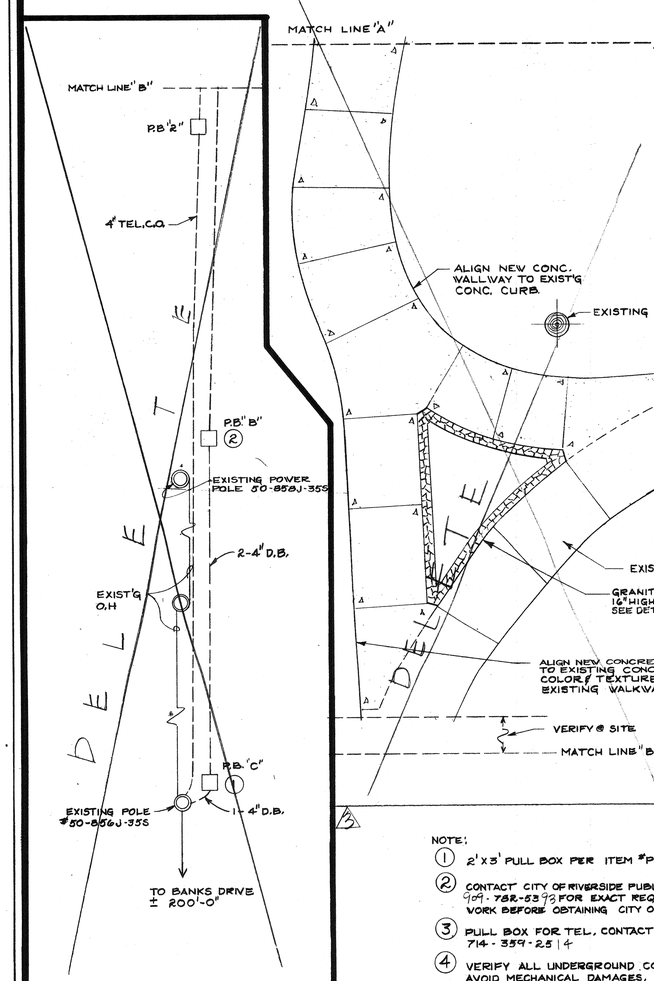

NOTE:

1. 2'x3' PULL BOX PER ITEM #P3-1 OF UGS-007
2. CONTACT CITY OF RIVERSIDE PUBLIC UTILITY DEPT, MR. BILL MAINORD 909-782-5393 FOR EXACT REQUIREMENTS, DO NOT COMMENCE ANY WORK BEFORE OBTAINING CITY OF RIVERSIDE WORKING DRAWINGS (PUBLIC UTILITIES DRAWING No 1104-4146-2 DATED 12/2/93 ATTACHED TO THIS SET AS E-4)
3. PULL BOX FOR TEL. CONTACT PAC. TEL. FOR ALL REQUIREMENTS 714-359-2514
4. VERIFY ALL UNDERGROUND CONDUITS, PIPING, AVOID MECHANICAL DAMAGES.

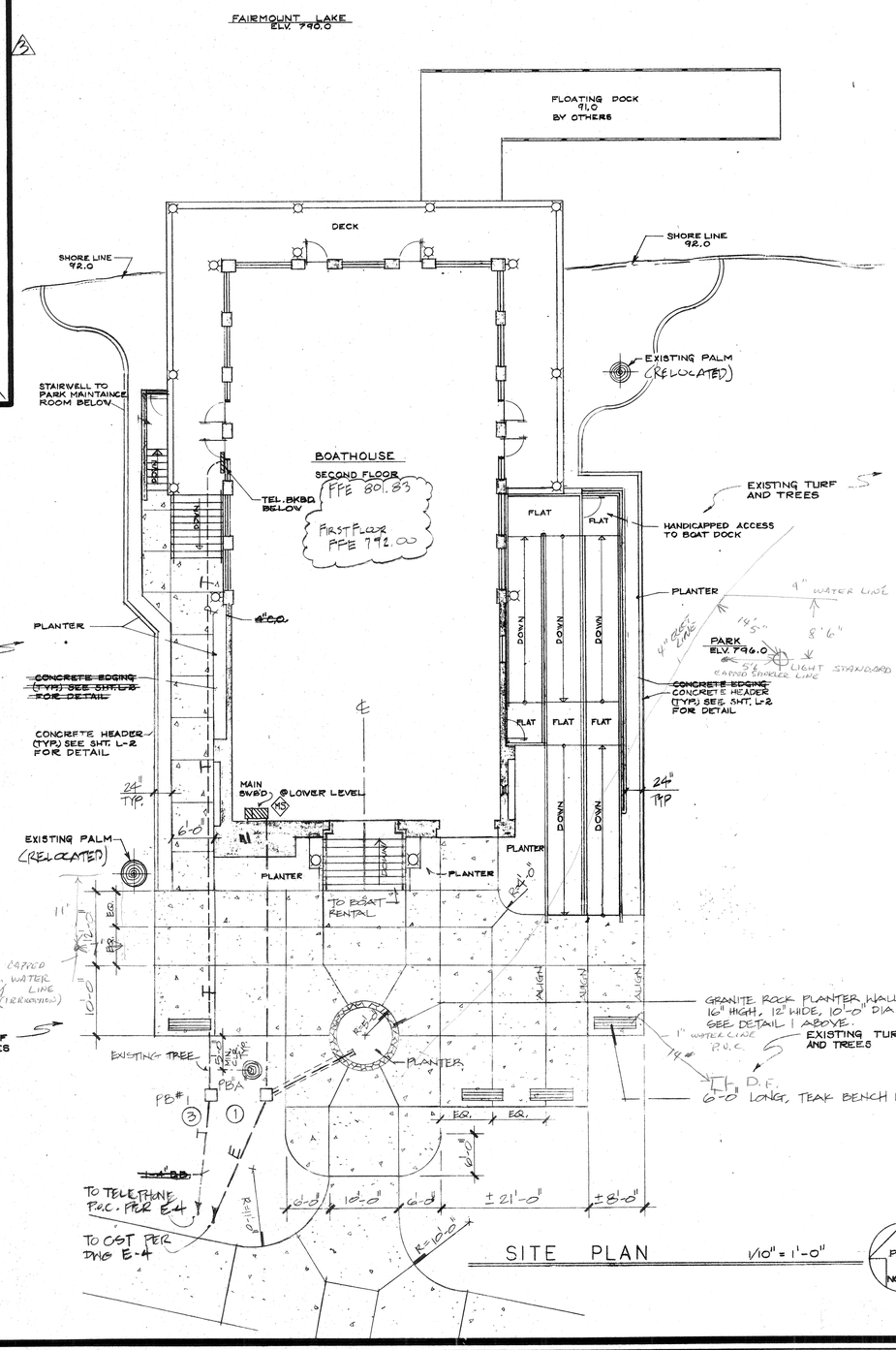

SITE PLAN 1/10" = 1'-0"

PLAN NORTH

MARCH 1,1994

Cole & Frick Architects, A.I.A.
4195 Chestnut Street
Riverside, California
92501 714/684-4011

BOATHOUSE for FAIRMOUNT PARK

CITY OF RIVERSIDE
PARKS & RECREATION DEPARTMENT

SITE PLAN
~~with ELECTRICAL~~

REVISIONS
1 5.24.93
2 12.15.93

DRAWN BY
RS

DATE: 10/10/91
JOB NUMBER

A-1
SHEET NO. 4
OF 27

PLAN NO. P-0113

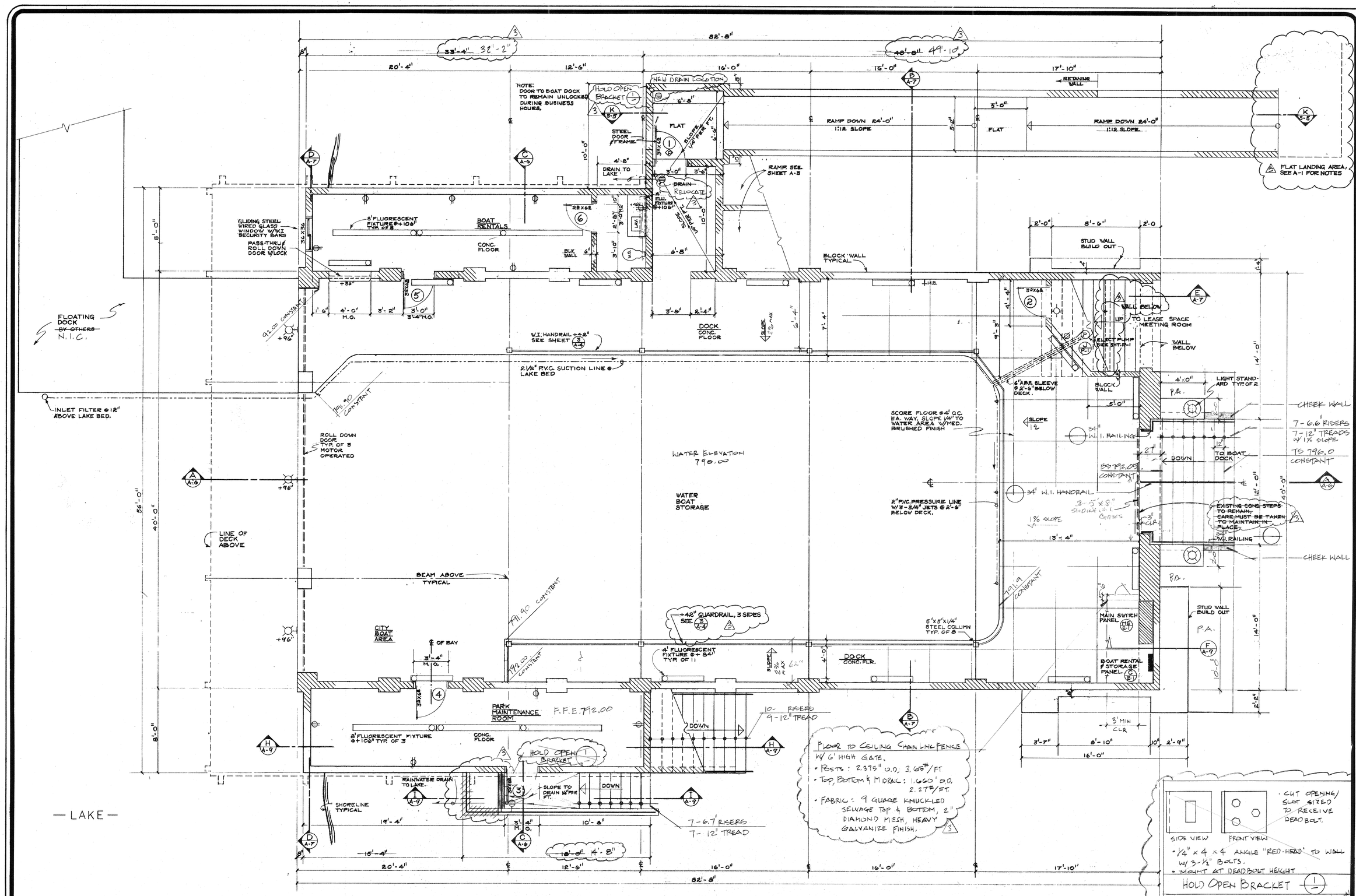

LOWER LEVEL PLAN 1/4" = 1'-0"

AREA —		
BOAT RENTAL	266.00	S.F.
PARK MAINTANCE	266.00	S.F.
BOAT STORAGE	3306.80	S.F.
TOTAL	3838.80	S.F.

◇ PANIC HARDWARE REQUIRED

MARCH 1, 1994

Cole & Frick Architects, A.I.A.
4195 Chestnut Street
Riverside, California
92501 714/684-4011

BOATHOUSE for FAIRMOUNT PARK

CITY OF RIVERSIDE
PARKS & RECREATION DEPARTMENT

LOWER LEVEL FLOOR PLAN

REVISIONS
△1 12-15-93

DRAWN BY
RS

DATE: 10/10/93
JOB NUMBER

A-2
SHEET NO. 5
OF 27

PLAN NO. P-0113

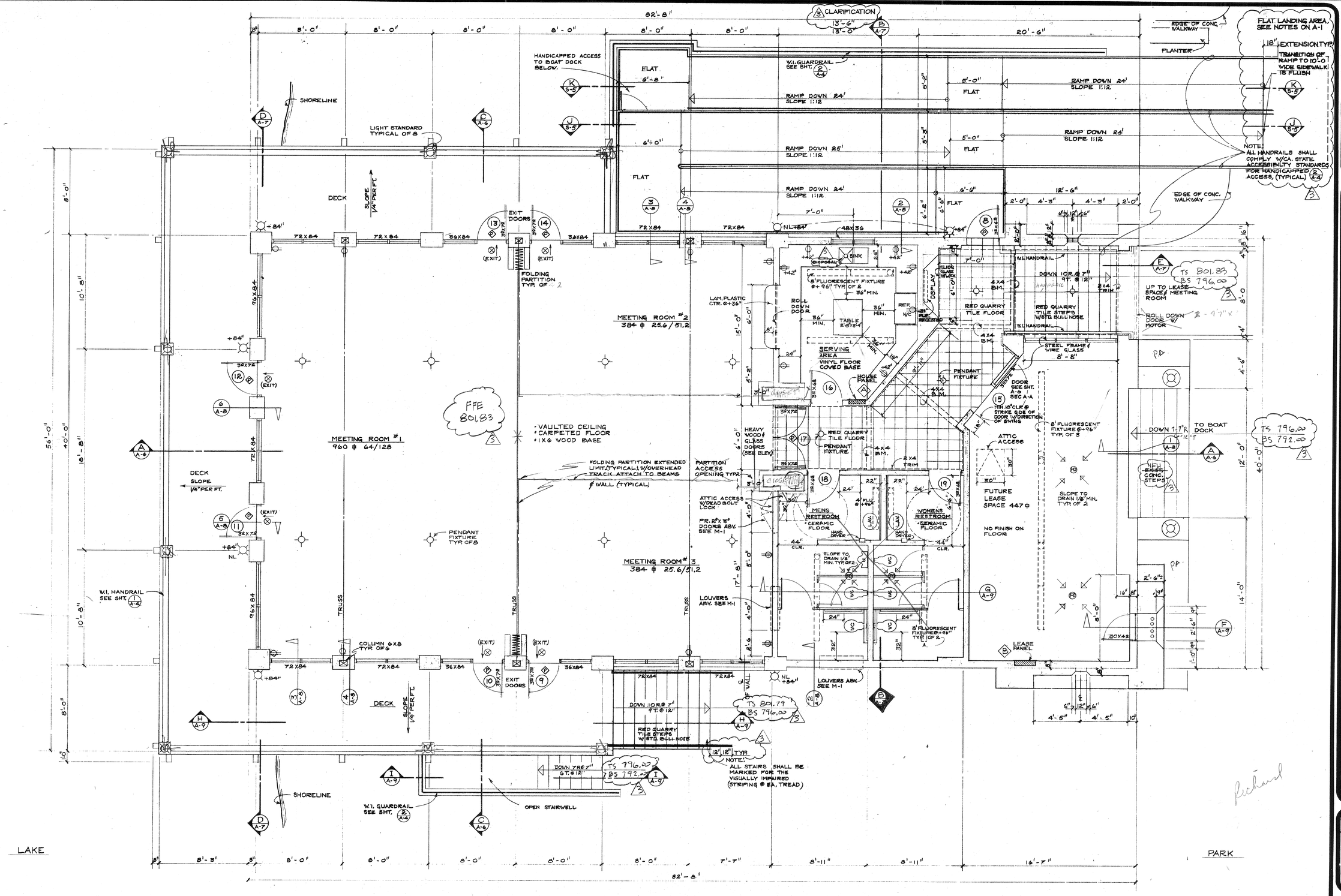

SECOND FLOOR PLAN

1/4" = 1'-0"

AREA —

MEETING ROOMS	1960.00 S.F.
SUPPORT ROOMS	873.52 S.F.
FUTURE LEASE SP.	477.00 S.F.
TOTAL	3,306.00 S.F.

PANIC HARDWARE REQUIRED

PLAN NORTH

MARCH 1, 1994

Cole & Frick Architects, A.I.A.

4195 Chestnut Street
Riverside, California
92501 714/684-4011

BOATHOUSE for FAIRMOUNT PARK

CITY OF RIVERSIDE
PARKS & RECREATION DEPARTMENT

SECOND FLOOR PLAN

REVISIONS
1 12.15.93

DRAWN BY
RS

DATE: 10/10/91
JOB NUMBER

A-3
SHEET NO. 6
OF 27

PLAN NO. P-0113

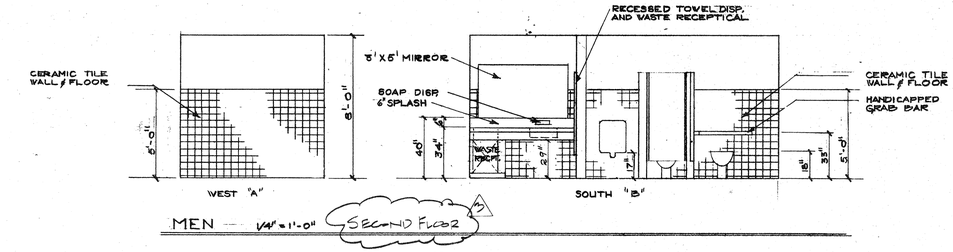

MEN — 1/4" = 1'-0" SECOND FLOOR 3

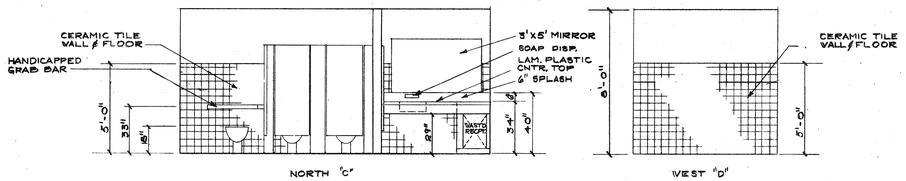

WOMEN 1/4" = 1'-0" SECOND FLOOR 3

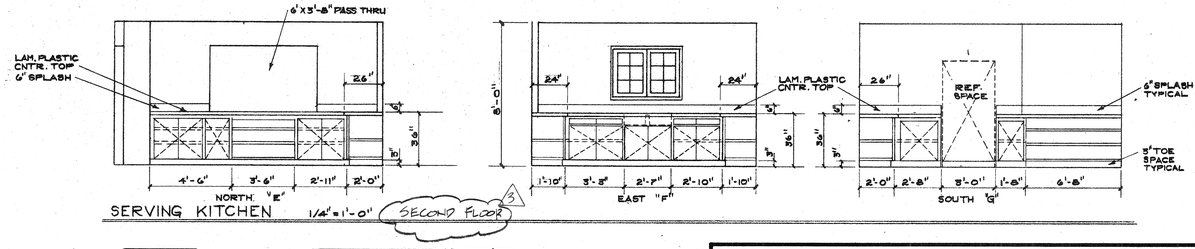

SERVING KITCHEN 1/4" = 1'-0" SECOND FLOOR 3

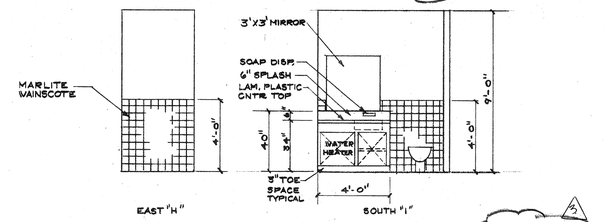

RENTAL OFFICE RESTROOM 1/4" = 1'-0" LOWER LEVEL 3

INTERIOR COLOR SCHEDULE 3

LOWER LEVEL:
- WALLS & CEILINGS — OFF WHITE
- RESTROOM MARLITE WALLS — TAN (NAT. CONC. FLR)
- FIXTURES — WHITE
- COUNTER TOP — TAN
- CABINET — WHITE
- DOORS — MED. BRN.

SECOND FLOOR:
- WALLS & CEILINGS — OFF WHITE
- WOOD TRUSSES & WOOD TRIM — DARK BRN.
- ENTRY STAIRS & FLOOR — RED QUARRY TILE
- MENS RESTROOM TILE — TAN
- FIXTURES — WHITE
- COUNTER TOP — TAN, CABINET — WHITE
- PARTITIONS — LIGHT BLUE
- WOMENS RESTROOM TILE WALL & FLOOR — SALMON
- FIXTURES — WHITE
- COUNTER TOP — SALMON, CABINET — WHITE
- PARTITIONS — LIGHT PINK
- SERVING AREA COUNTER — TAN, CABINETS — WHITE
- FLOOR VINYL — MED. BRN.
- MEETING ROOM CARPET — MED. BRN.

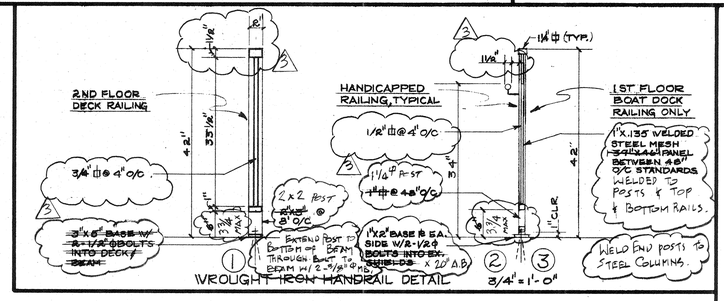

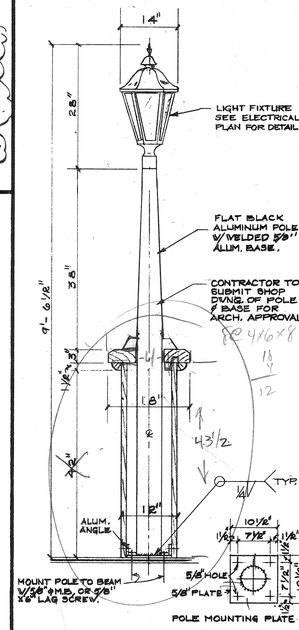

LIGHT STANDARD DETAIL
TYPICAL OF 8 — 3/4" = 1'-0"

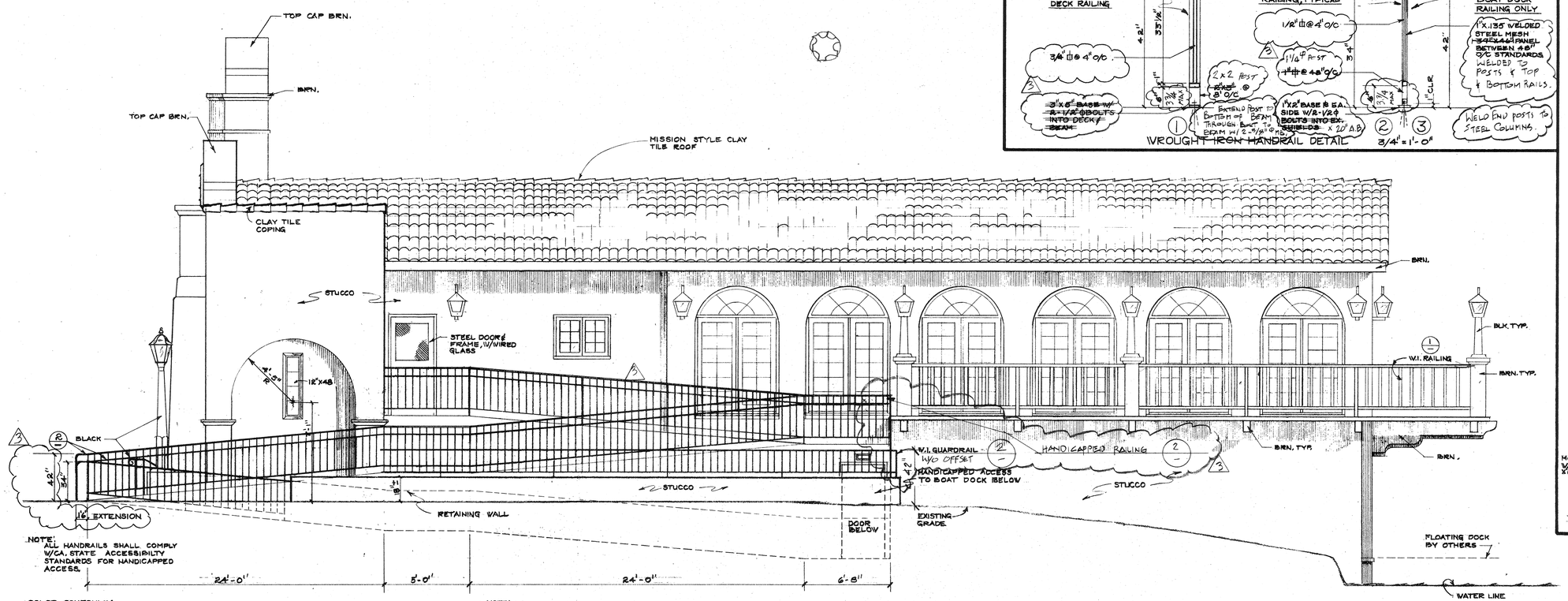

NOTE: ALL HANDRAILS SHALL COMPLY W/CA. STATE ACCESSIBILITY STANDARDS FOR HANDICAPPED ACCESS.

COLOR SCHEDULE:
EXTERIOR DOORS, WINDOW FRAMES, TRIM, BEAMS, WOOD LIGHT STD'S BROWN (BRN).
ALL OTHER EXTERIOR SURFACES STUCCO FINISH COAT OFF WHITE.
ALL HANDRAILS BLACK.
ROOF VENTS COLOR TO MATCH TILE

CONTRACTOR SHALL SUBMIT COLOR SAMPLES TO PARK & REC. AND C.H.B. STAFF FOR APPROVAL.
STUCCO TEXTURE TO MATCH THE FOX THEATER 3801 7TH ST. RIVERSIDE.

NOTE: ALL DOOR & WINDOW GLASS SHALL BE TEMPERED.

EAST ELEVATION

PLAN NORTH

1/4" = 1'-0"
MARCH 1, 1994

Cole & Frick Architects, A.I.A.
4195 Chestnut Street
Riverside, California
92501 714/684-4011

BOATHOUSE for FAIRMOUNT PARK
CITY OF RIVERSIDE
PARKS & RECREATION DEPARTMENT

EAST ELEVATION
LIGHT COL.
RESTROOM & SERVING KITCHEN
INTERIOR ELEVATIONS

REVISIONS
3 12-15-93

DRAWN BY
PS

DATE: 10/10/91
JOB NUMBER
A-4
SHEET NO. 7
OF 27

PLAN NO. P-0113

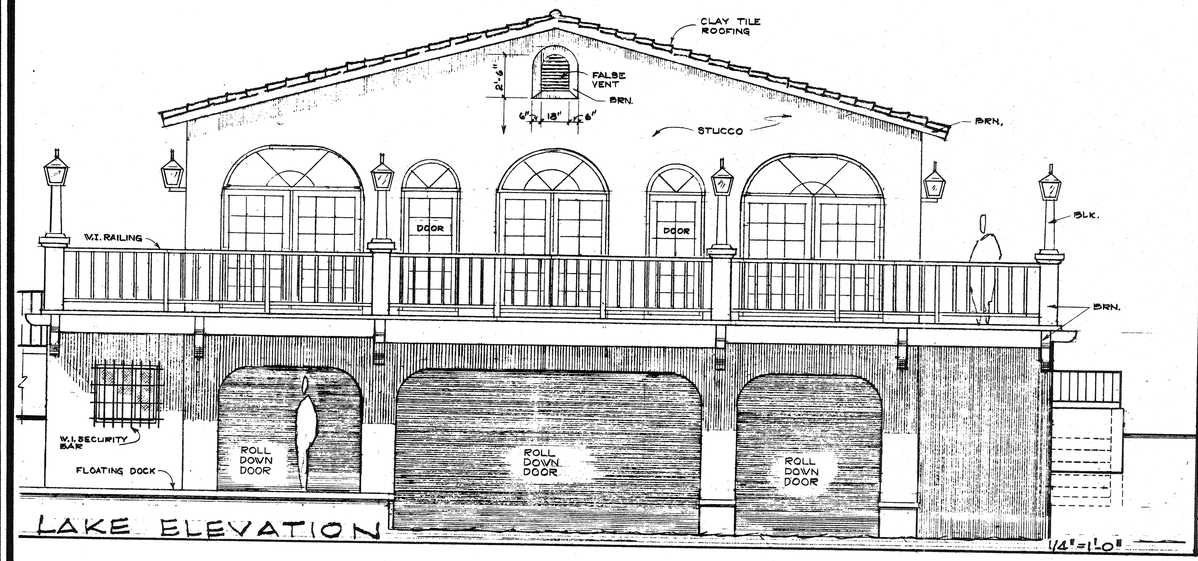

LAKE ELEVATION

1/4"=1'-0"

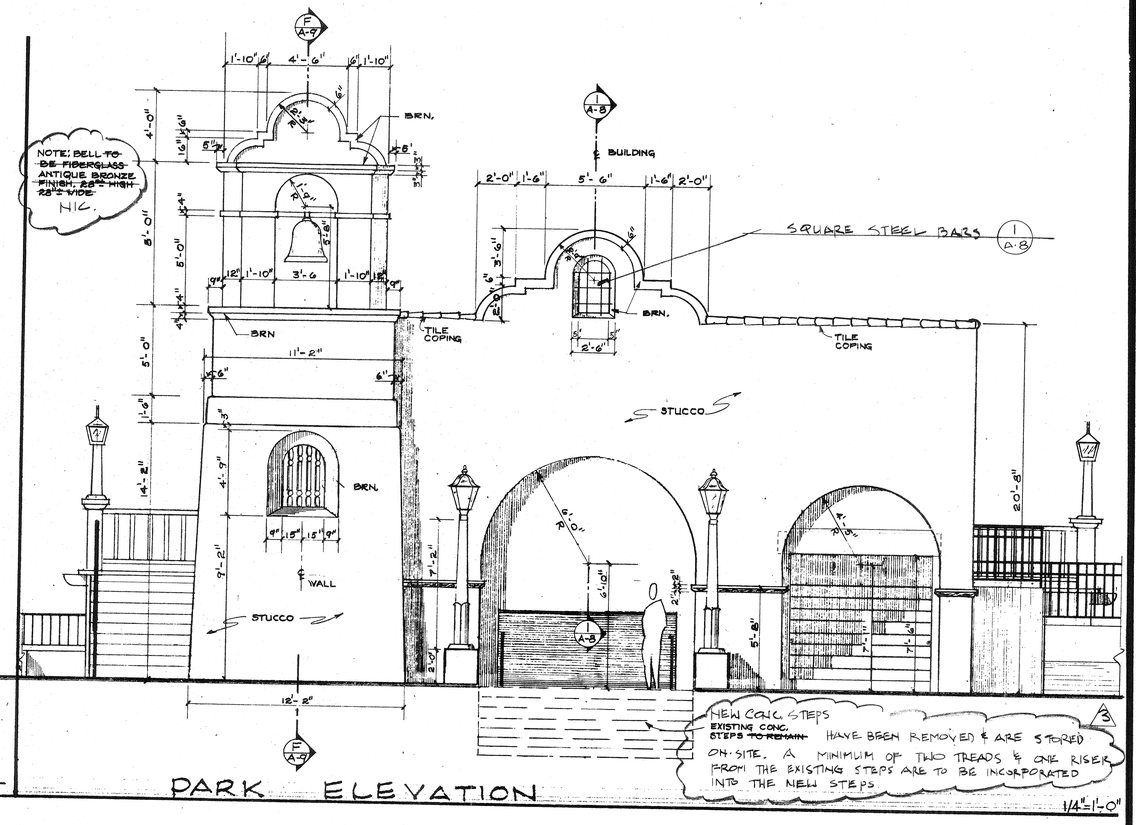

PARK ELEVATION

1/4"=1'-0"

ROOFING: RED CLAY TILE
WALLS/STUCCO: OFF WHITE
WOOD TRIM: DARK BROWN (BRN)
STUCCO TEXTURE SHALL MATCH THE FOX THEATER, 3801 7th ST, RIVERSIDE.
CONTRACTOR SHALL SUBMIT COLOR SAMPLE TO PARKS/REC. AND C.H.B. STAFF FOR APPROVAL.

NOTE:
ALL HANDRAILS SHALL COMPLY W/CA. STATE ACCESSIBILITY STANDARDS FOR HANDICAPPED ACCESS.

NOTE:
ALL DOOR/WINDOW GLASS SHALL BE TEMPERED.

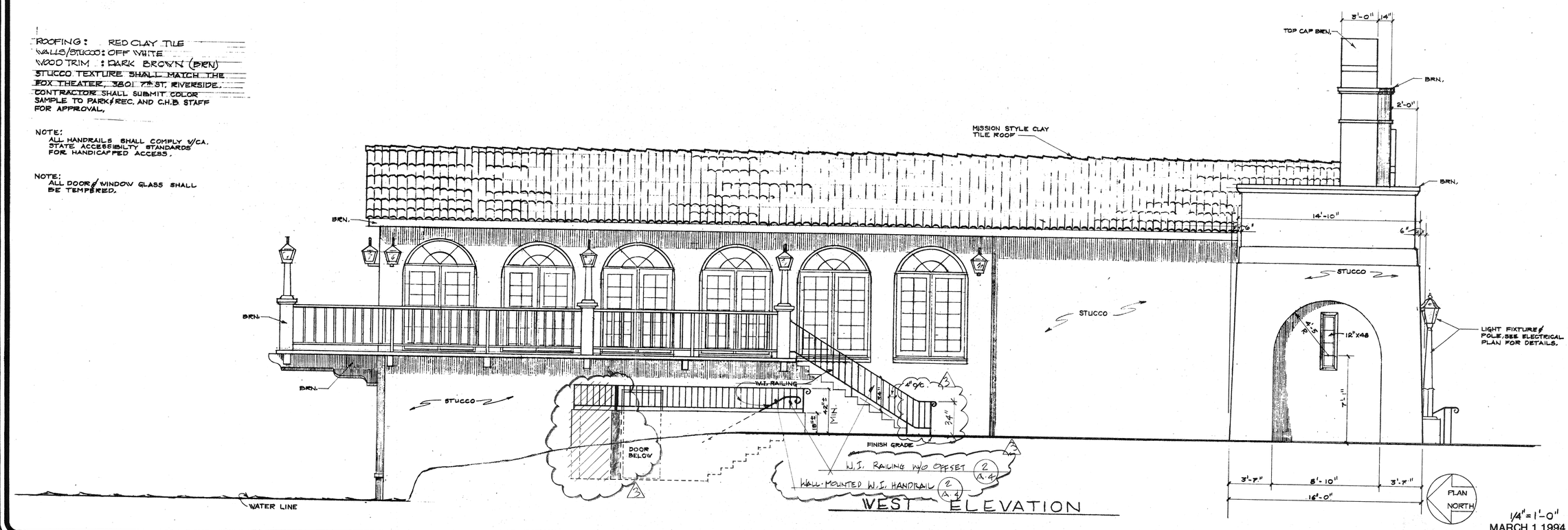

WEST ELEVATION

1/4"=1'-0"
MARCH 1,1994

Cole & Frick Architects, A.I.A.
4195 Chestnut Street
Riverside, California
92501 714/684-4011

BOATHOUSE for FAIRMOUNT PARK
CITY OF RIVERSIDE
PARKS & RECREATION DEPARTMENT

EXTERIOR ELEVATIONS

REVISIONS
1 12.15.93

DRAWN BY
RS

DATE: 10/10/93
JOB NUMBER

A-5
SHEET NO. 8
OF 27

PLAN NO. P-0113

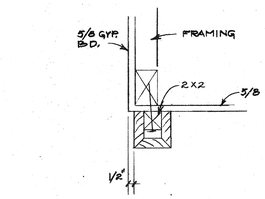

1 TYPICAL 4 X 4 BEAM

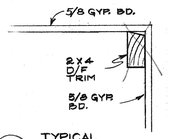

2 TYPICAL WALL TRIM

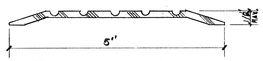

3 TYPICAL ALUMINUM THRESHOLD

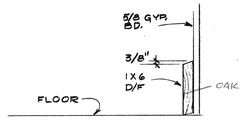

4 TYPICAL WOOD BASE

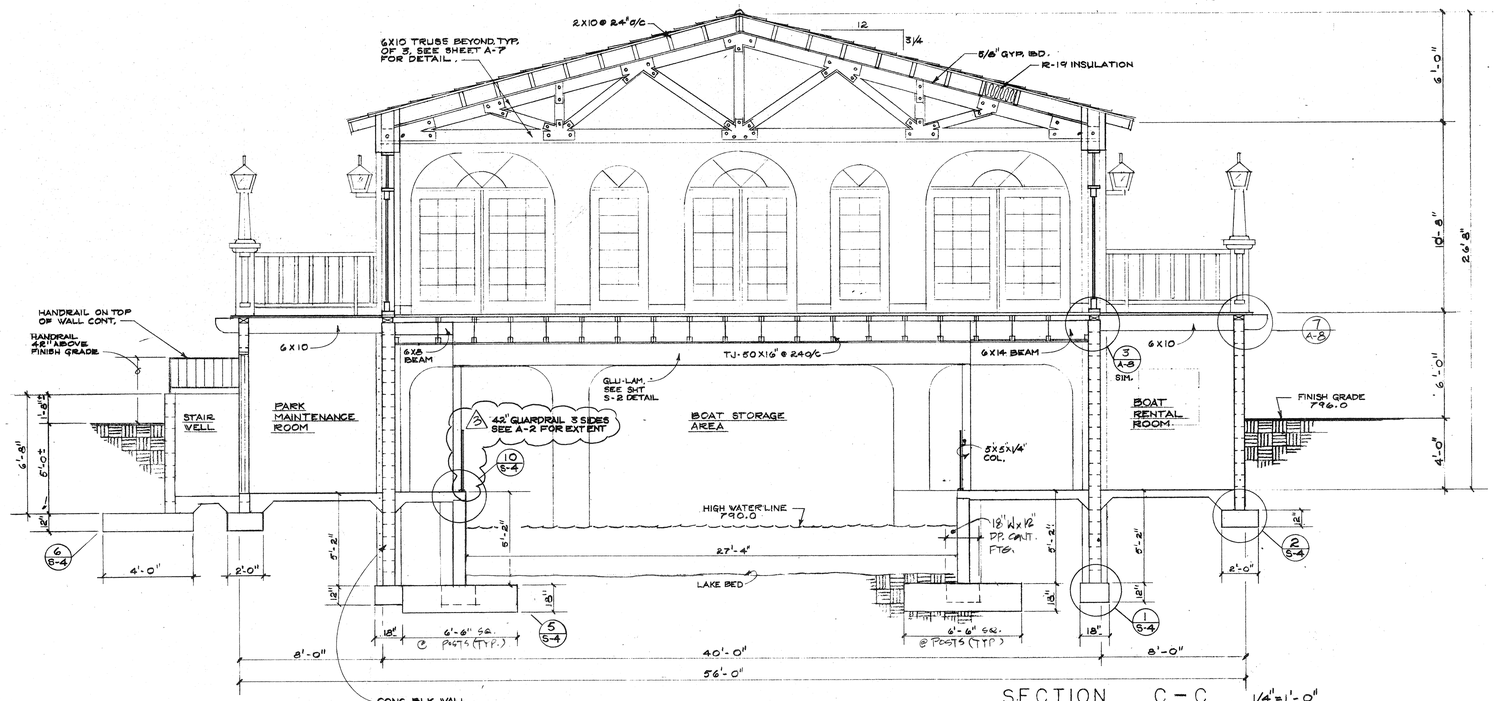

SECTION C – C 1/4" = 1'-0"

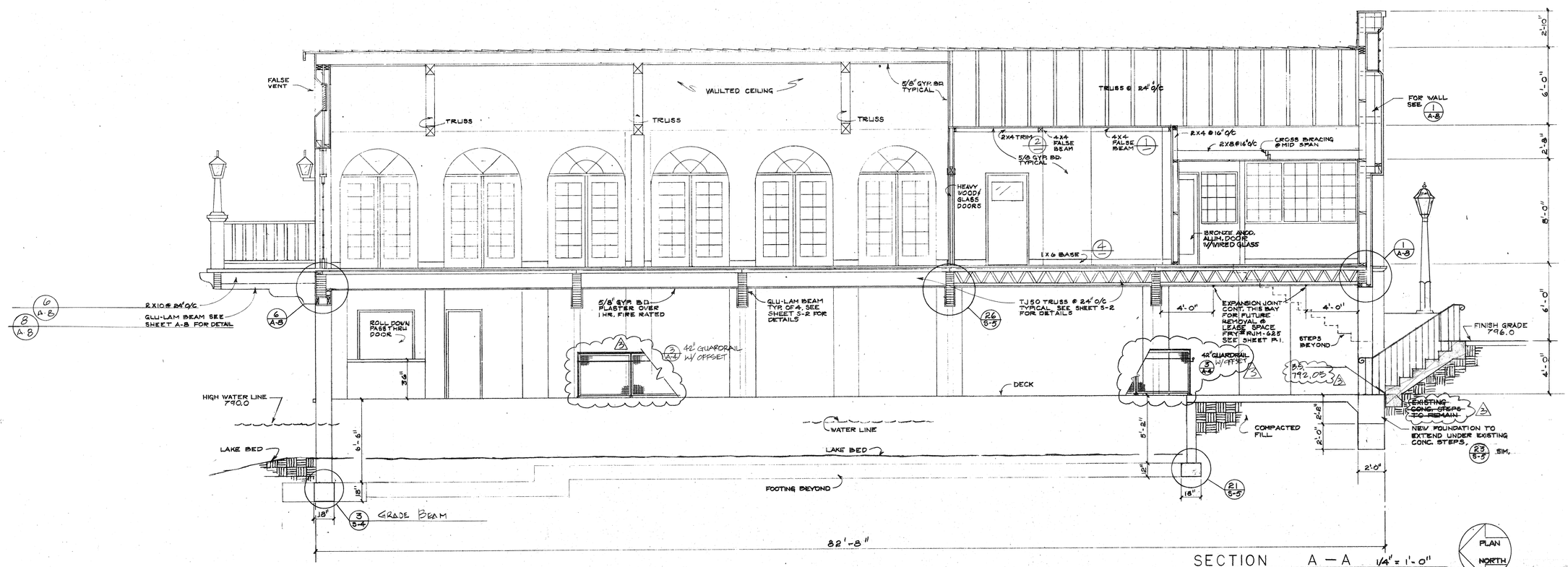

SECTION A – A 1/4" = 1'-0"

PLAN NORTH

MARCH 1, 1994

PLAN NO. P-0113

Cole & Frick Architects, A.I.A.
4195 Chestnut Street
Riverside, California
92501 714/684-4011

BOATHOUSE for FAIRMOUNT PARK
CITY OF RIVERSIDE
PARKS & RECREATION DEPARTMENT

SECTIONS A & C

REVISIONS
△3 12-15-93

DRAWN BY
RS

DATE: 10/10/93
JOB NUMBER

A-6
SHEET NO. 9
OF 27

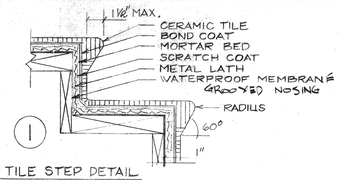

TILE STEP DETAIL
1 1/2" = 1'-0"

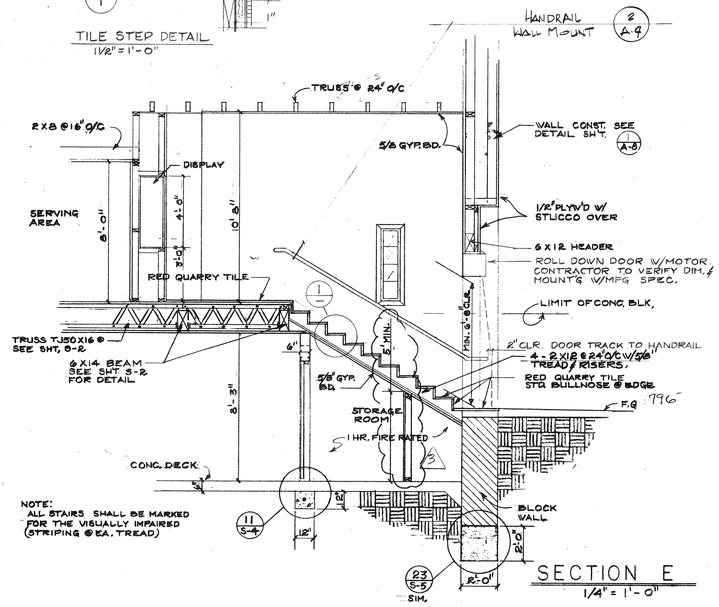

SECTION E
1/4" = 1'-0"

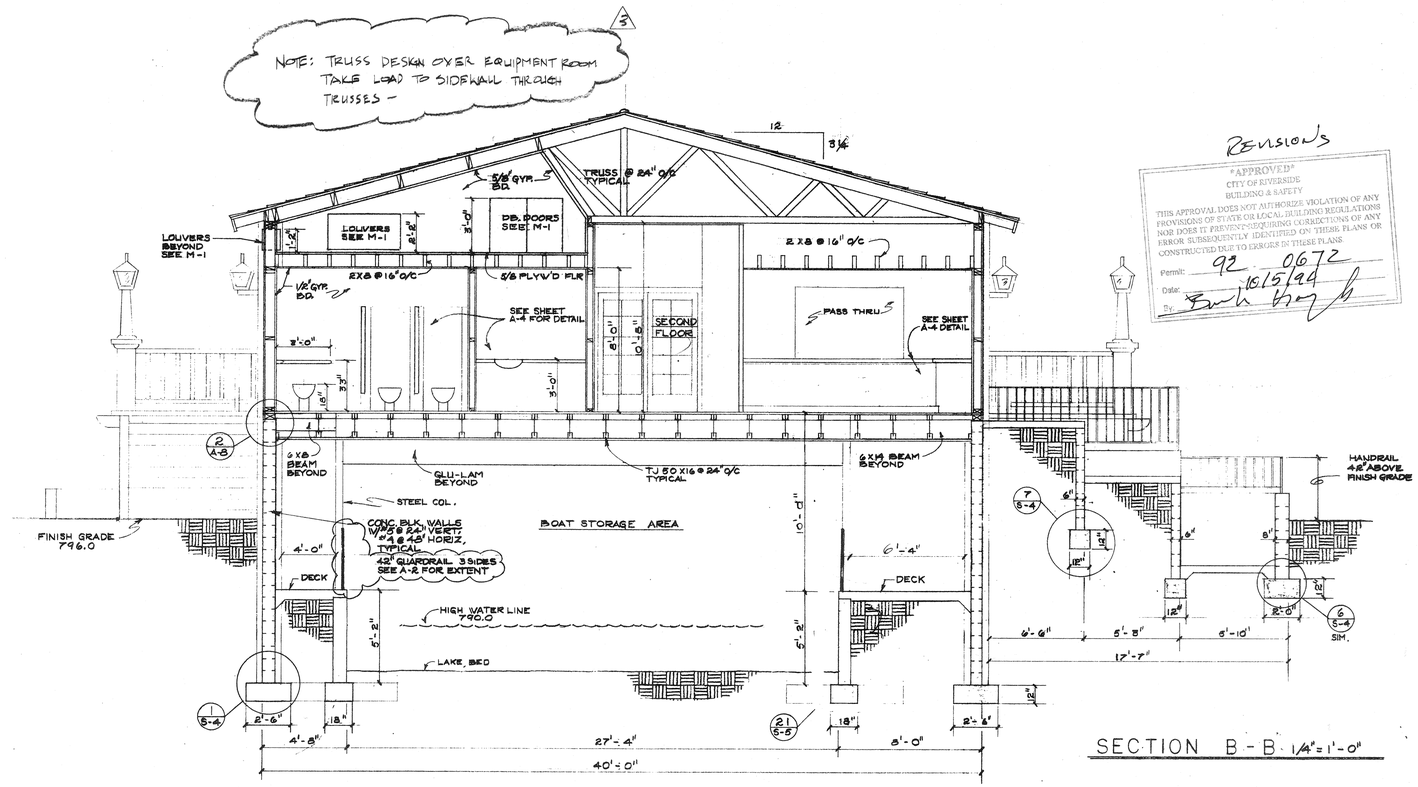

SECTION B - B 1/4" = 1'-0"

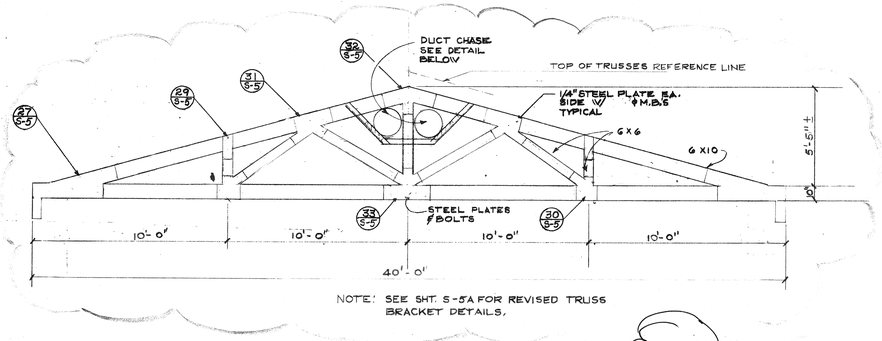

TRUSS ELEVATION 1/4" = 1'-0"

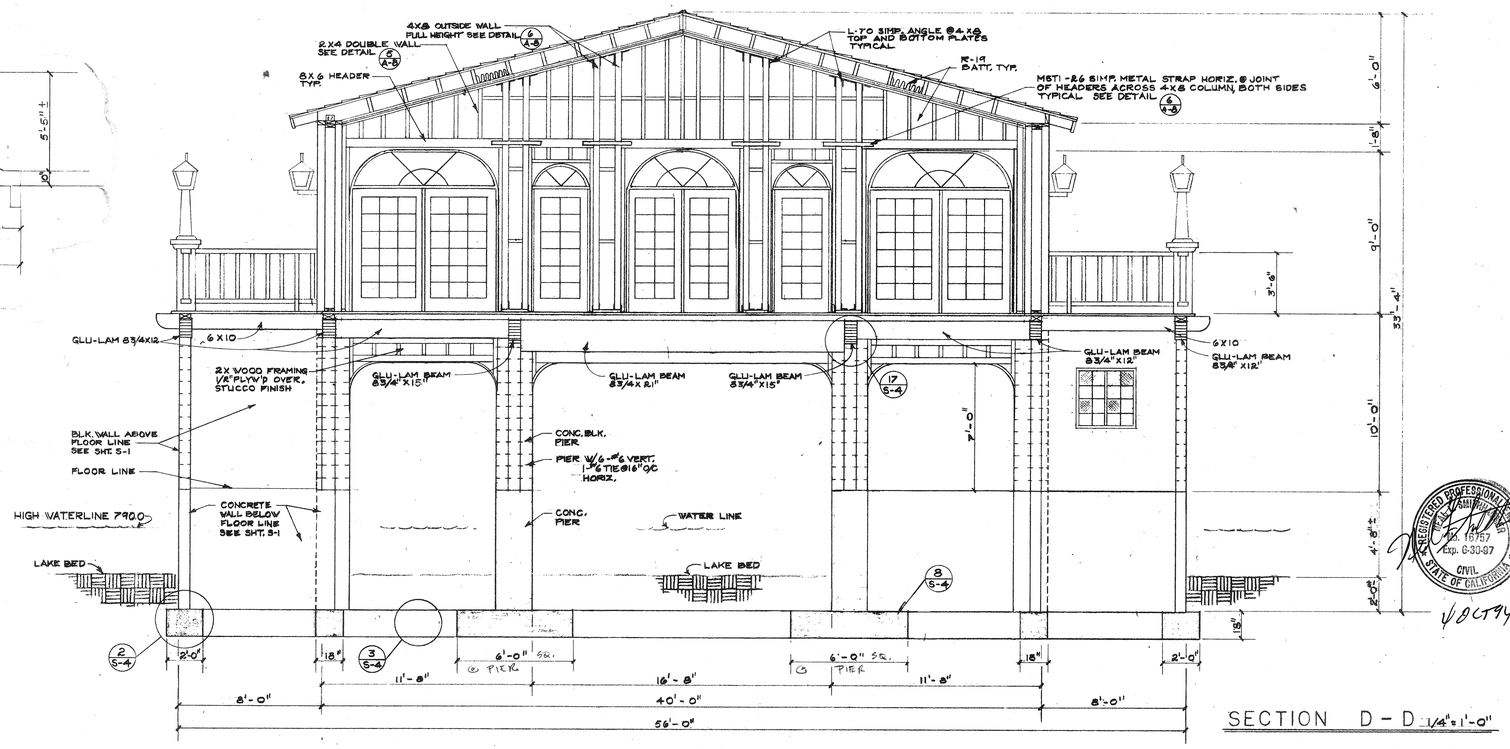

SECTION D - D 1/4" = 1'-0"

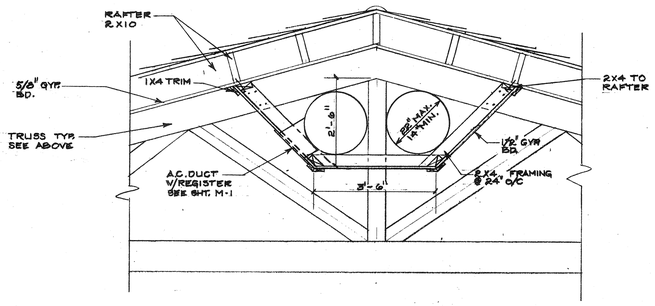

DUCT CHASE SECTION 1/2" = 1'-0"

REVISIONS

"APPROVED"
CITY OF RIVERSIDE
BUILDING & SAFETY
THIS APPROVAL DOES NOT AUTHORIZE VIOLATION OF ANY PROVISIONS OF STATE OR LOCAL BUILDING REGULATIONS NOR DOES IT PREVENT REQUIRING CORRECTIONS OF ANY ERROR SUBSEQUENTLY IDENTIFIED ON THESE PLANS OR CONSTRUCTED DUE TO ERRORS IN THESE PLANS.
Permit: 92 0672
Date: 10/15/94
By: Barb Hoyt

REGISTERED PROFESSIONAL ENGINEER
RAMIN RAZAVI
No. 15757
Exp. 6-30-97
CIVIL
STATE OF CALIFORNIA

10 OCT 94

MARCH 1, 1994

Cole & Frye ARCHITECTS
4195 Chestnut Street
Riverside, California
92501 714/684-4011

BOATHOUSE for FAIRMOUNT PARK
CITY OF RIVERSIDE
PARKS & RECREATION DEPARTMENT

SECTIONS B,D, & E
TRUSS ELEVATION

REVISIONS
1 12·15·93
2 9·12·94

DRAWN BY
RS

DATE: 10/10/93
JOB NUMBER
A-7
SHEET NO. 10
OF 29

2707 LOCUST ST.
PERMIT #92-0672

PLAN NO. P-9113

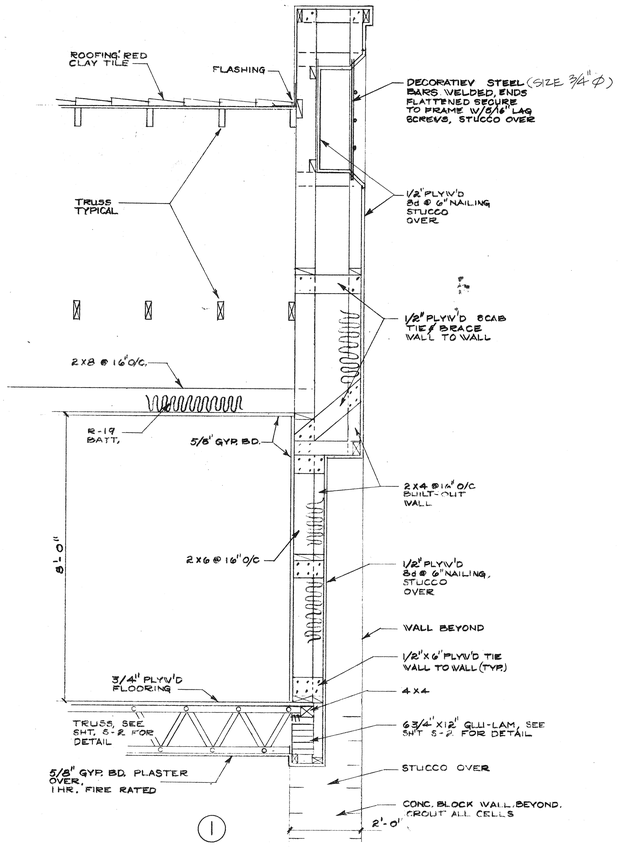

1

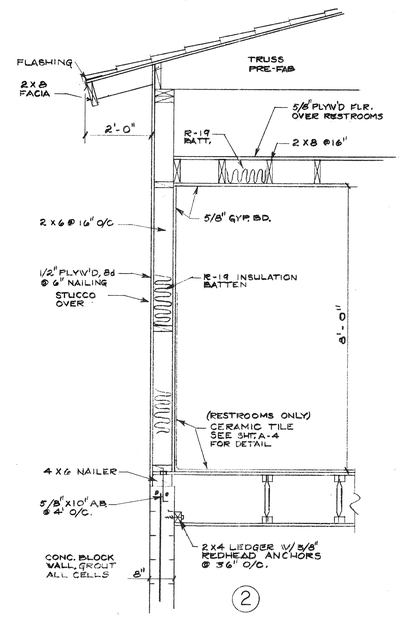

2

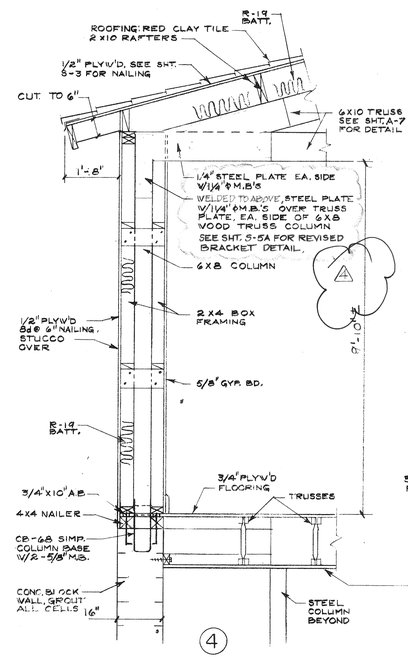

4

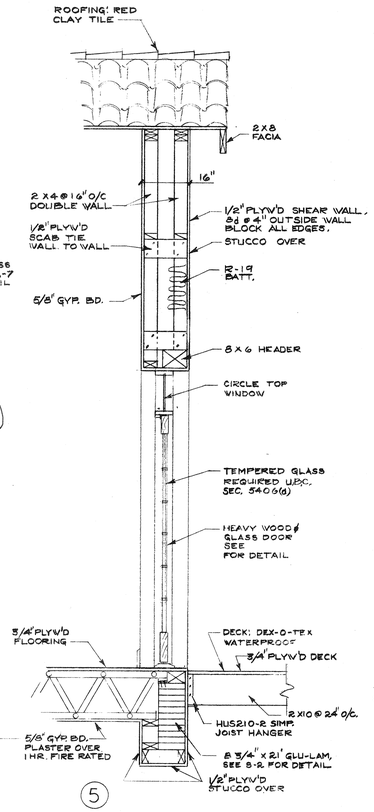

5

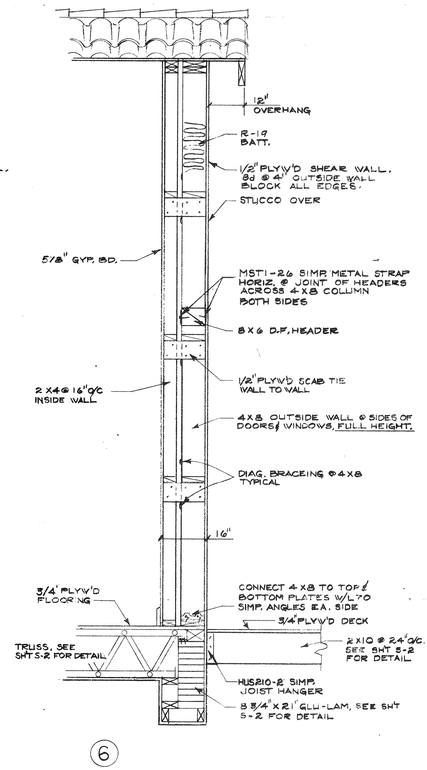

6

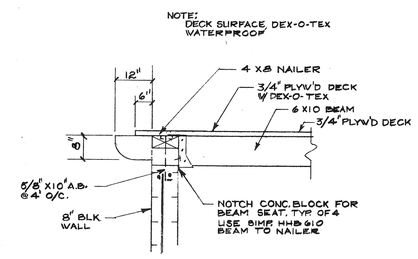

7

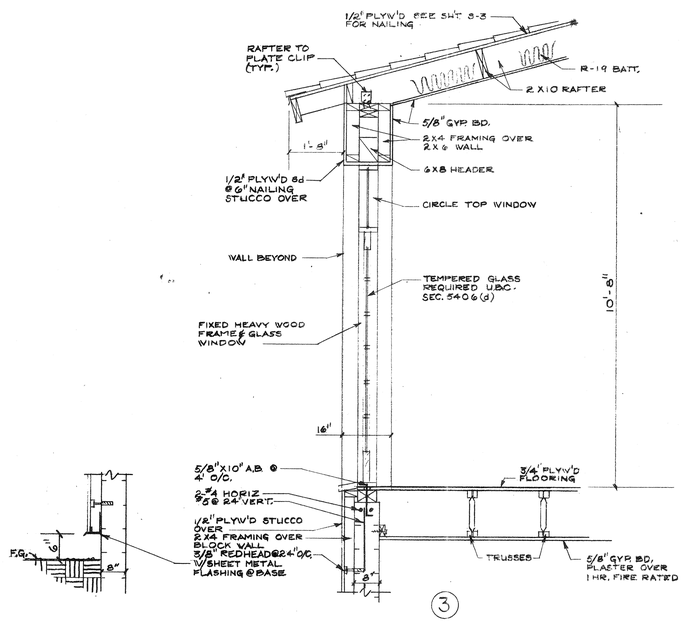

3

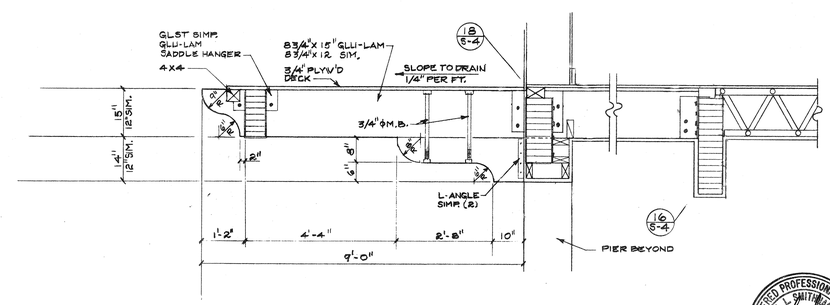

8

WALL SECTION DETAILS 1/2" = 1'-0"

REGISTERED PROFESSIONAL ENGINEER — WILLIAM L. SMITH — No. 16757 — Exp. 6-30-07 — CIVIL — STATE OF CALIFORNIA

4-09-94

MARCH 1, 1994

Coke & Frick Architects, A.I.A.
4195 Chestnut Street
Riverside, California
92501 714/684-4011

BOATHOUSE for FAIRMOUNT PARK

CITY OF RIVERSIDE
PARKS & RECREATION DEPARTMENT

WALL SECTION DETAILS

REVISIONS
B 12-15-93
A 9-12-94

DRAWN BY
RS

DATE: 10/10/91
JOB NUMBER

A-8
SHEET NO. 11
OF 27

PLAN NO. P-0113

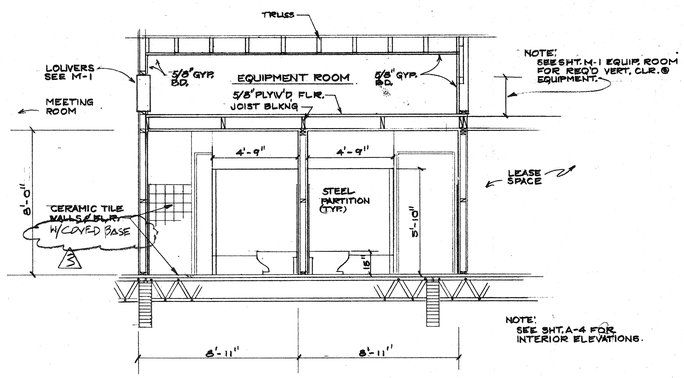

SECTION-G 1/4"=1'-0"

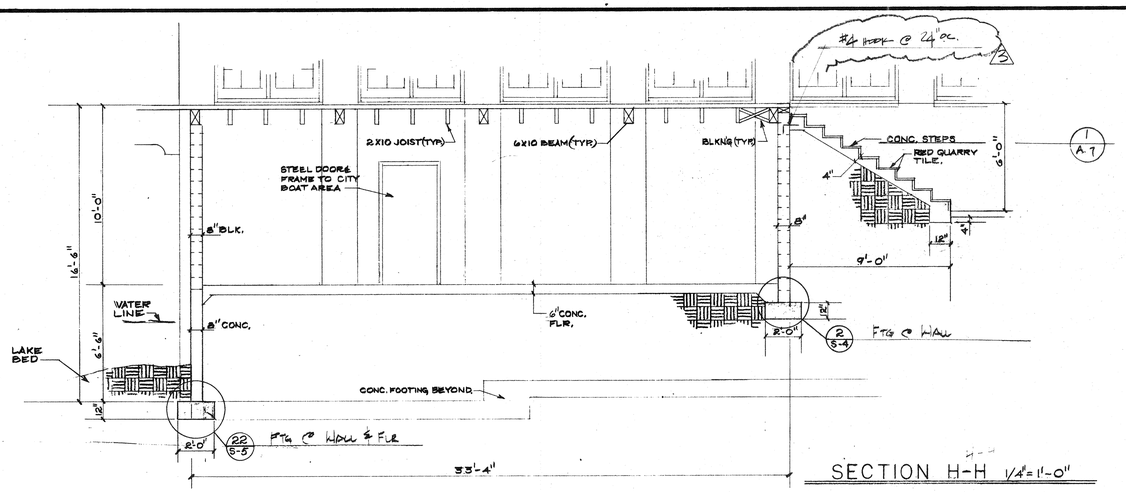

SECTION H-H 1/4"=1'-0"

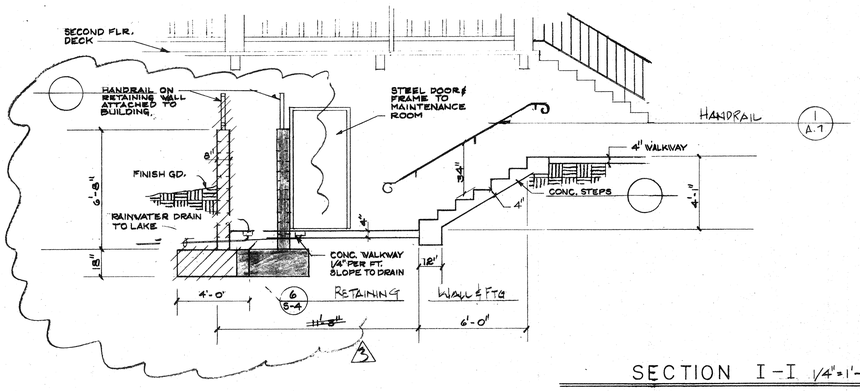

SECTION I-I 1/4"=1'-0"

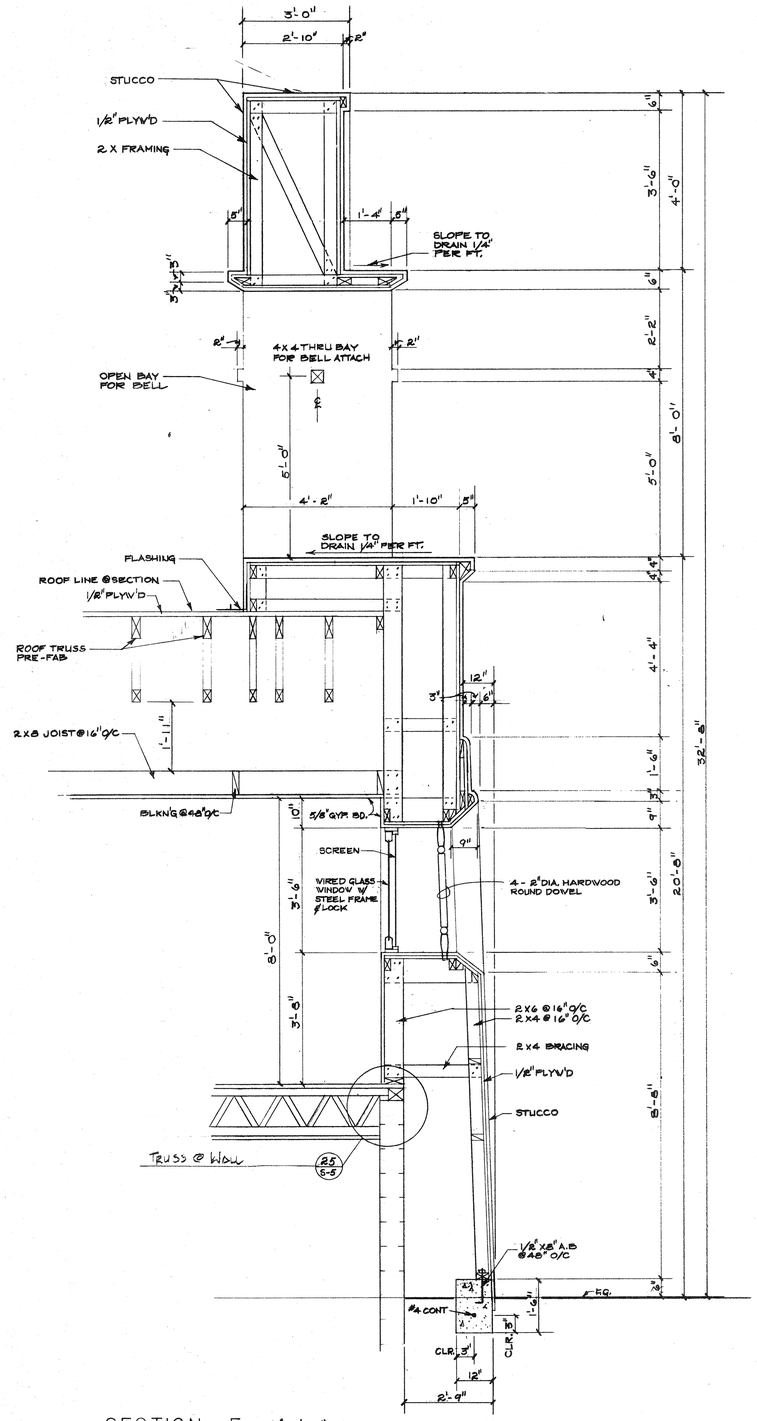

SECTION - F 1/2"=1'-0"

MARCH 1,1994

Cole & Frick Architects, A.I.A.
4195 Chestnut Street
Riverside, California
92501 714/684-4011

BOATHOUSE for FAIRMOUNT PARK

CITY OF RIVERSIDE
PARKS & RECREATION DEPARTMENT

REVISIONS
1 12-15-93

DRAWN BY
RS

DATE:
JOB NUMBER

A-9
SHEET NO. 12
OF 29

PLAN NO. P-8113

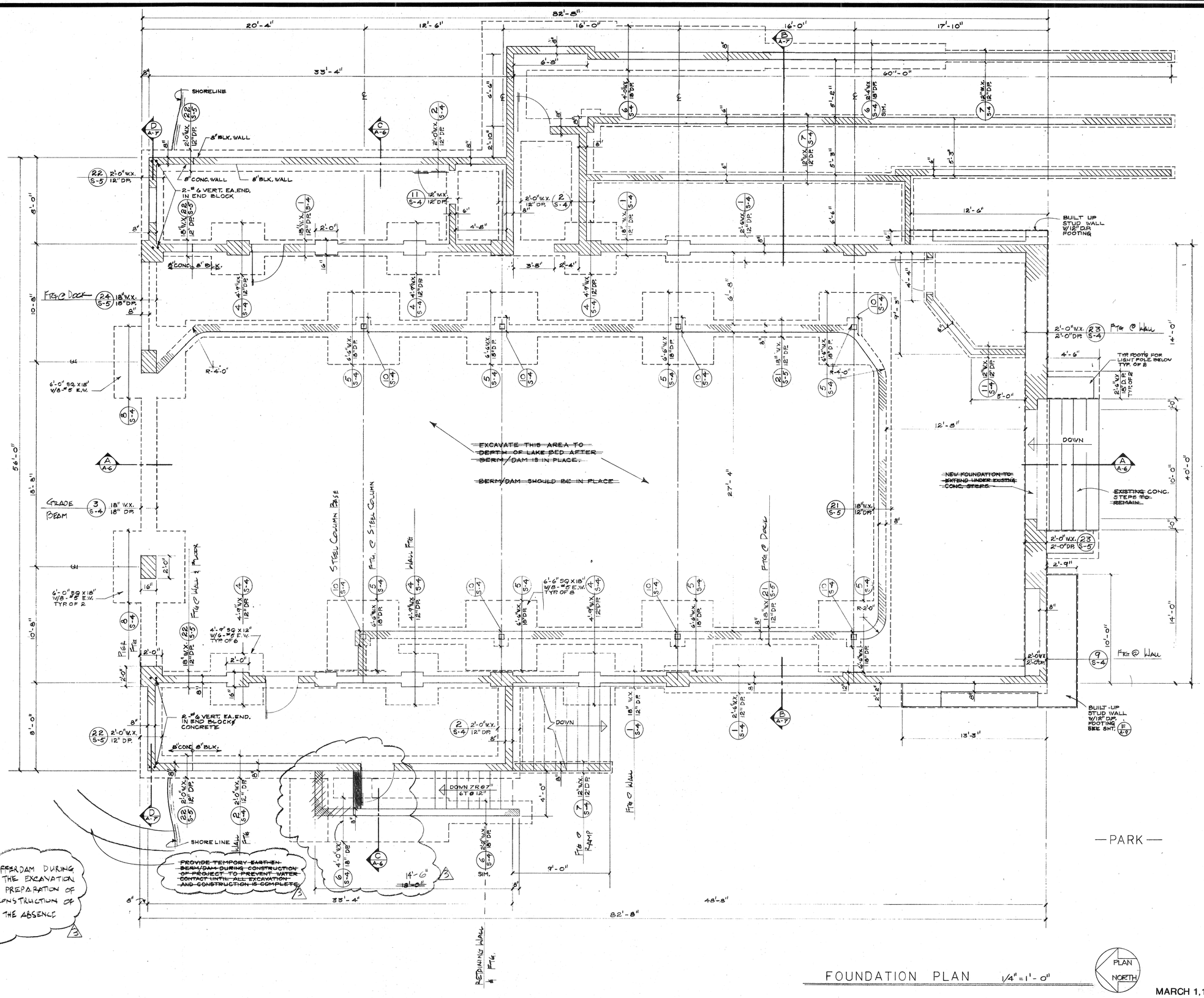

FOUNDATION PLAN 1/4" = 1'-0"

MARCH 1,1994

Cole & Frick Architects, A.I.A.

4195 Chestnut Street
Riverside, California
92501 714/684-4011

BOATHOUSE for FAIRMOUNT PARK
CITY OF RIVERSIDE
PARKS & RECREATION DEPARTMENT

FOUNDATION PLAN

REVISIONS
A 12.15.93

DRAWN BY
ES

DATE: 10/10/91
JOB NUMBER

S-1
SHEET NO. 13
OF 27

PLAN NO. P-0113

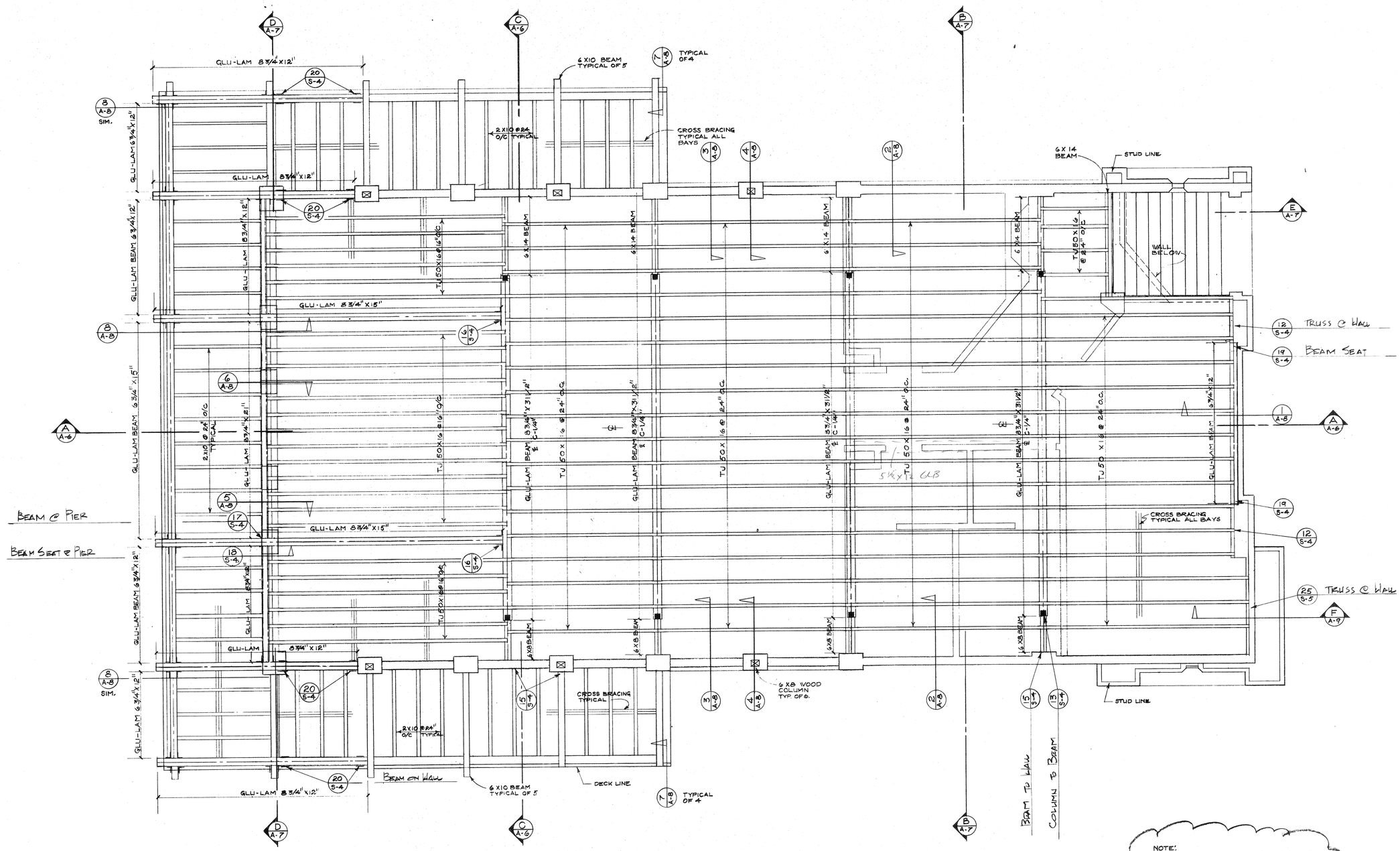

NOTE:
~~BEFORE CONSTRUCTION BEGINS~~ SUBMIT ALL TRUSS CALCULATIONS TO ~~BUILDING DEPARTMENT FOR APPROVAL~~ CITY FOR REVIEW & APPROVAL. CITY APPROVAL REQ'D PRIOR TO COMMENCING CONSTRUCTION.

SECOND FLOOR FRAMING PLAN 1/4"=1'-0"

PLAN NORTH

MARCH 1,1994

Cole & Frick Architects, A.I.A.
4195 Chestnut Street
Riverside, California
92501 714/684-4011

BOATHOUSE for FAIRMOUNT PARK
CITY OF RIVERSIDE
PARKS & RECREATION DEPARTMENT

SECOND FLOOR FRAMING PLAN

REVISIONS
3 12-15-93

DRAWN BY
RS

DATE: 10/10/91
JOB NUMBER
S-2
SHEET NO. 14
OF 27

PLAN NO. P-0113

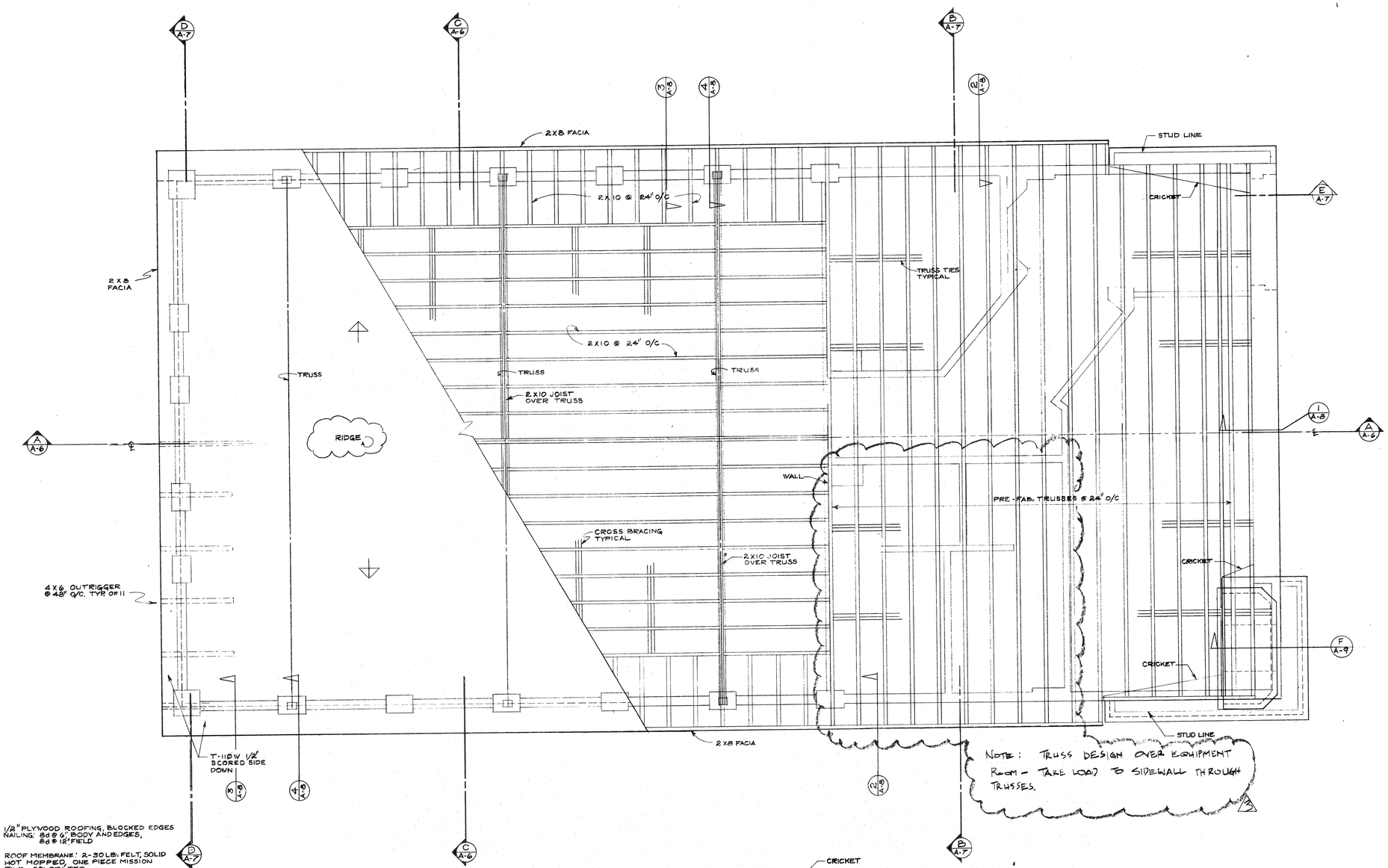

NOTE: 1/2" PLYWOOD ROOFING, BLOCKED EDGES NAILING: 8d @ 6" BODY AND EDGES, 8d @ 12" FIELD

ROOF MEMBRANE: 2-30 LB. FELT, SOLID HOT MOPPED, ONE PIECE MISSION TILE, COLOR: RED

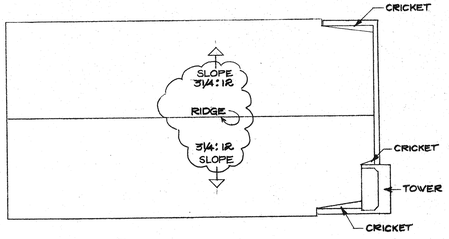

AREA: 3608.00 S.F.

ROOF PLAN 1/16" = 1'-0"

ROOF FRAMING PLAN 1/4" = 1'-0"

NOTE: ~~BEFORE CONSTRUCTION BEGINS~~ SUBMIT ALL TRUSS CALCULATIONS TO ~~BUILDING DEPARTMENT FOR APPROVAL~~ CITY FOR REVIEW & APPROVAL. CITY APPROVAL REQ'D PRIOR TO COMMENCING CONSTRUCTION.

PLAN NORTH

MARCH 1,1994

Cole & Frick Architects, A.I.A.
4195 Chestnut Street
Riverside, California
92501 714/684-4011

BOATHOUSE for FAIRMOUNT PARK

CITY OF RIVERSIDE
PARKS & RECREATION DEPARTMENT

ROOF FRAMING PLAN

REVISIONS
B 12.15.93

DRAWN BY
RS

DATE: 10/10/91
JOB NUMBER

S-3
SHEET NO. 15
OF 27

PLAN NO. P-01

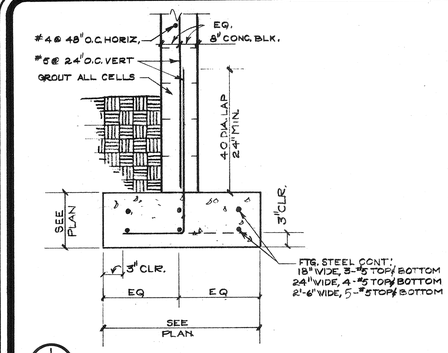

1 FOOTING @ WALL N.T.S.

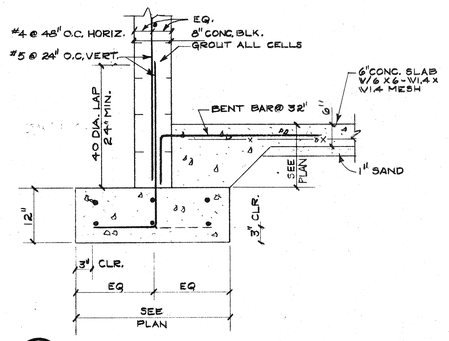

2 FOOTING @ WALL N.T.S.

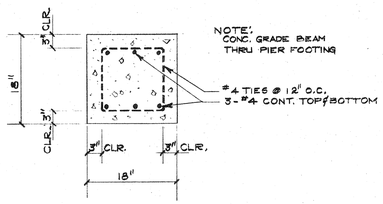

3 GRADE BEAM N.T.S.

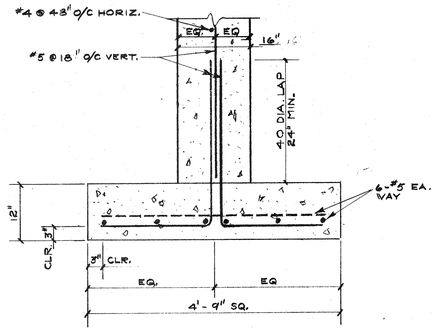

4 FOOTING @ WALL PIERS N.T.S.

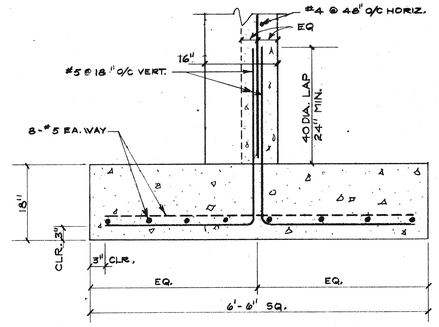

5 FOOTING @ STEEL COLUMN N.T.S.

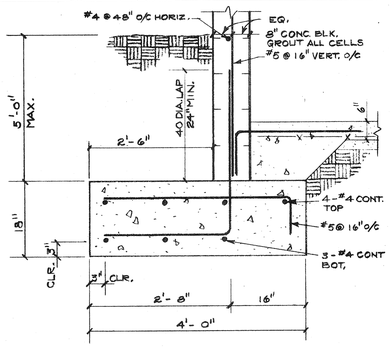

6 RETAINING WALL & FOOTING N.T.S.

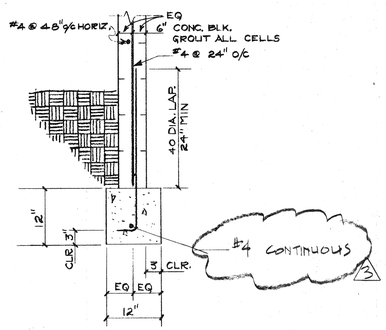

7 FOOTING @ RAMP N.T.S.

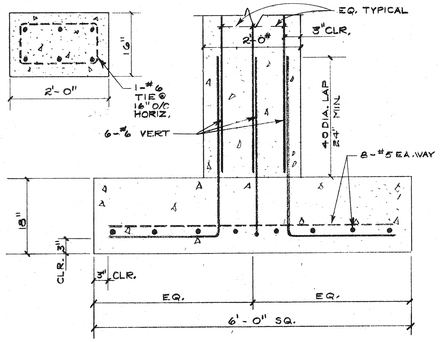

8 PIER FOOTING N.T.S.

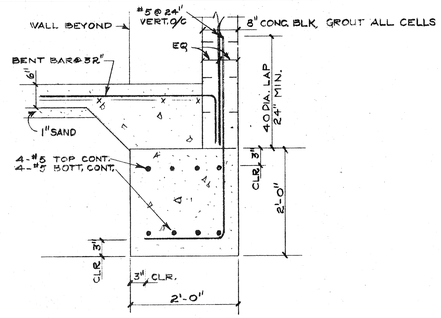

9 FOOTING @ WALL (SOUTH) N.T.S.

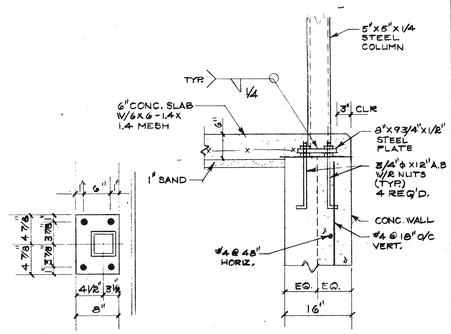

10 STEEL COLUMN BASE N.T.S.

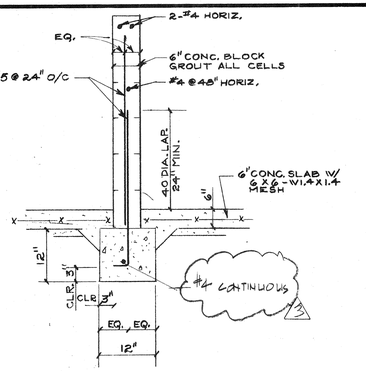

11 FOOTING @ STORAGE N.T.S.

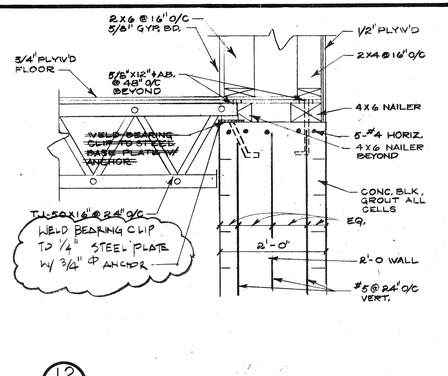

12 TRUSS @ WALL N.T.S.

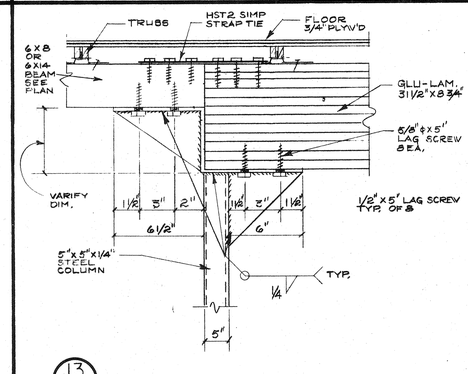

13 COLUMN TO BEAM N.T.S.

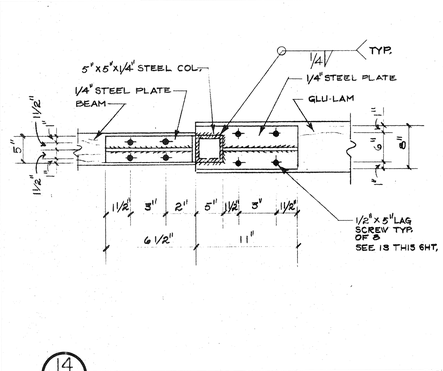

14 COLUMN TO BEAM N.T.S.

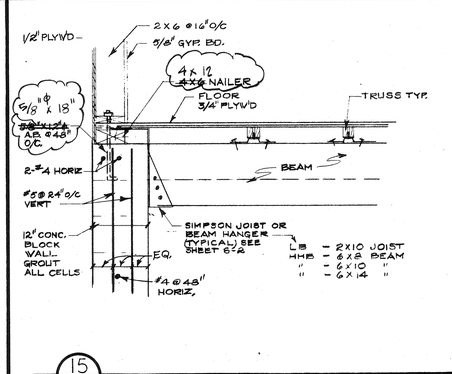

15 BEAM TO WALL N.T.S.

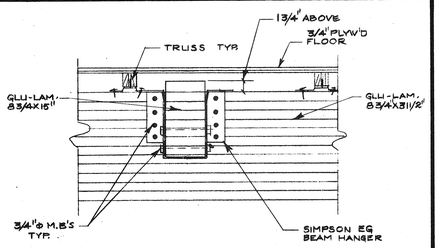

16 BEAM TO BEAM N.T.S.

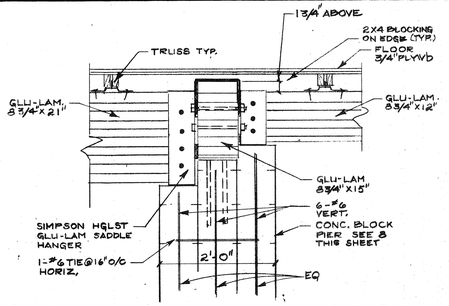

17 BEAMS @ PIER N.T.S.

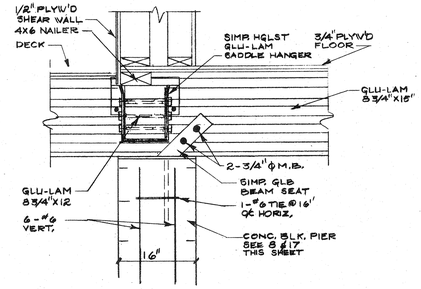

18 BEAM SEAT @ PIER N.T.S.

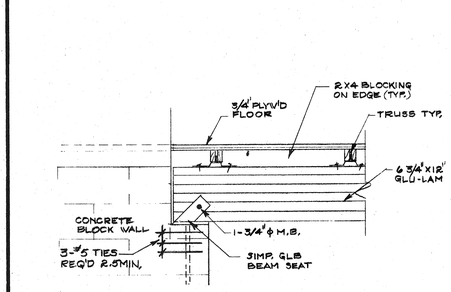

19 BEAM SEAT N.T.S.

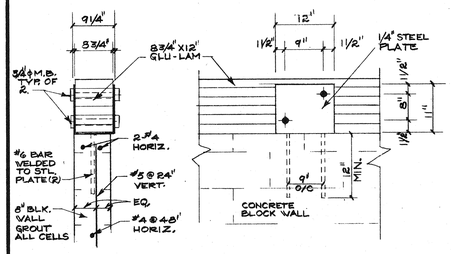

20 BEAM ON WALL N.T.S.

MARCH 1, 1994

Cole & Frick Architects, A.I.A.
4195 Chestnut Street
Riverside, California
92501 714/684-4011

BOATHOUSE for FAIRMOUNT PARK
CITY OF RIVERSIDE
PARKS & RECREATION DEPARTMENT

DETAILS

REVISIONS
△ 12.15.93

DRAWN BY
RS

DATE: 10/10/
JOB NUMBER

S-4
SHEET NO. 16
OF 27

PLAN NO. P-011

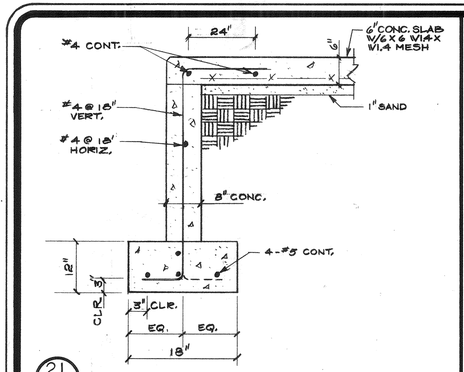

21 FOOTING @ DOCK N.T.S.

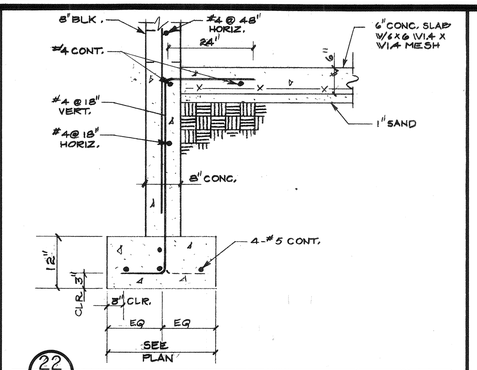

22 FOOTING @ WALL & FLOOR N.T.S.

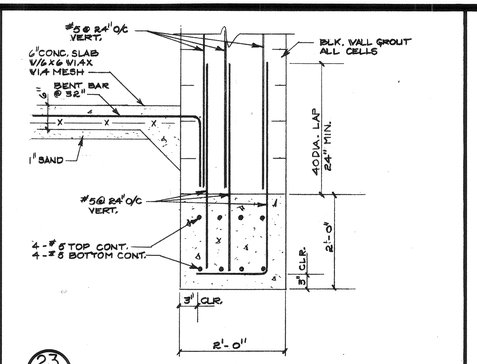

23 FOOTING @ WALL (SOUTH) N.T.S.

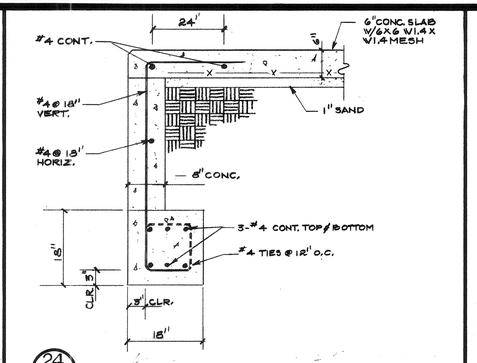

24 FOOTING @ DOCK N.T.S.

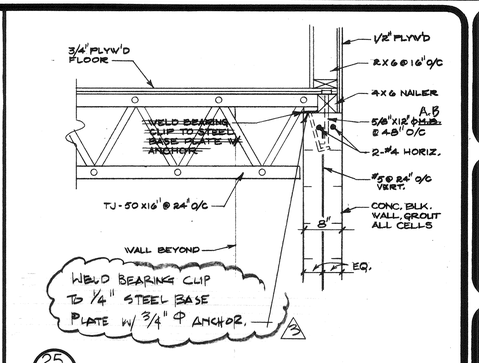

25 TRUSS @ WALL (SOUTH) N.T.S.

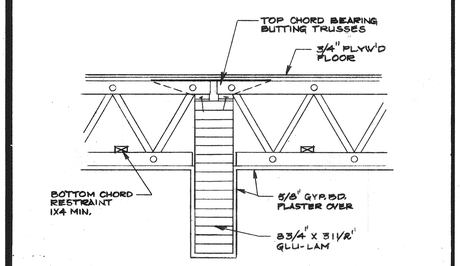

26 TRUSS @ GLU-LAM N.T.S.

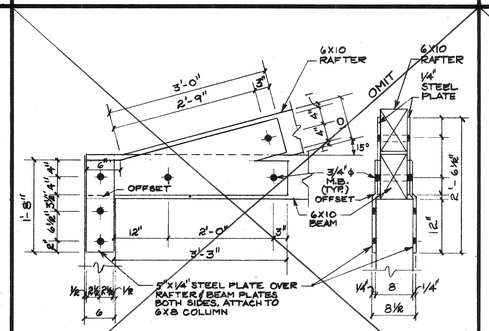

27 TRUSS BRACKET 3/4"=1'-0"

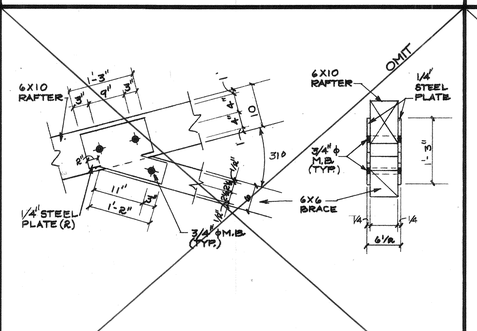

28 TRUSS BRACKET 3/4"=1'-0"

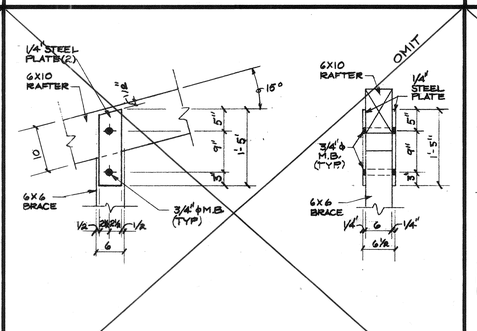

29 TRUSS BRACKET 3/4"=1'-0"

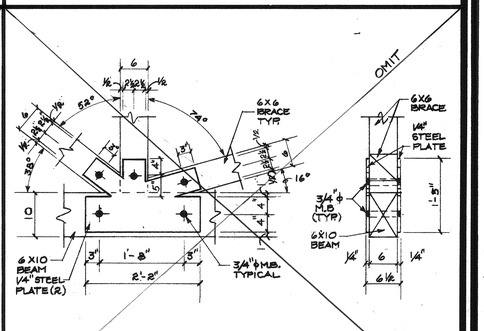

30 TRUSS BRACKET 3/4"=1'-0"

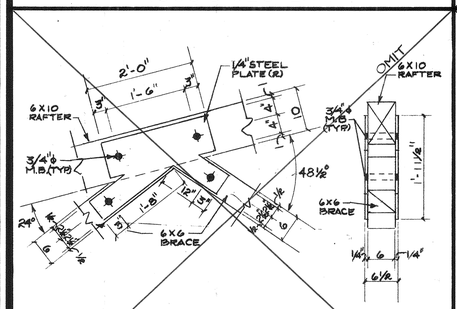

31 TRUSS BRACKET 3/4"=1'-0"

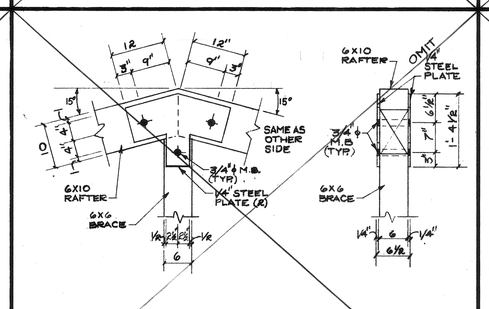

32 TRUSS BRACKET 3/4"=1'-0"

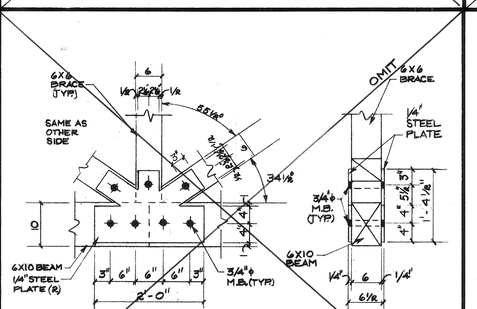

33 TRUSS BRACKET 3/4"=1'-0"

NOTE:

TRUSS BRACKETS SHALL HAVE ALL 3/4" HOLES TO MATCH OPPOSING BRACKET. 3/4" ϕ M.B. @ ALL LOCATIONS W/WASHERS & NUTS, DIMENSIONS & ANGLES TO BE VERIFIED BEFORE CONSTRUCTION.

SEE SHT. S-5A FOR REVISED TRUSS BRACKETS

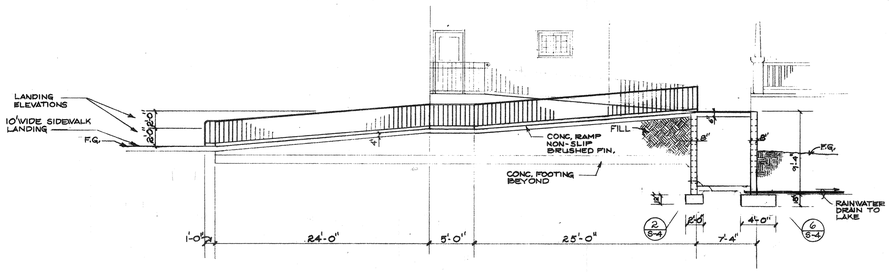

SECTION J-J 1/8" = 1'-0"

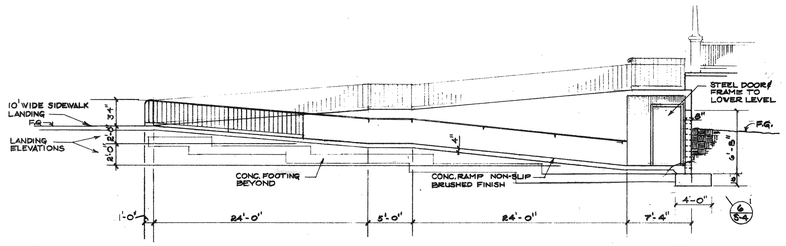

SECTION K-K 1/8" = 1'-0"

MARCH 1, 1994

Cole & Frick Architects, A.I.A.

4195 Chestnut Street
Riverside, California
92501 714/684-4011

BOATHOUSE for FAIRMOUNT PARK

CITY OF RIVERSIDE
PARKS & RECREATION DEPARTMENT

REVISIONS
3 12.15.93
4 9.12.94

DRAWN BY

DATE:
JOB NUMBER

S-5
SHEET NO. 17
OF 27

PLAN NO. P-0113

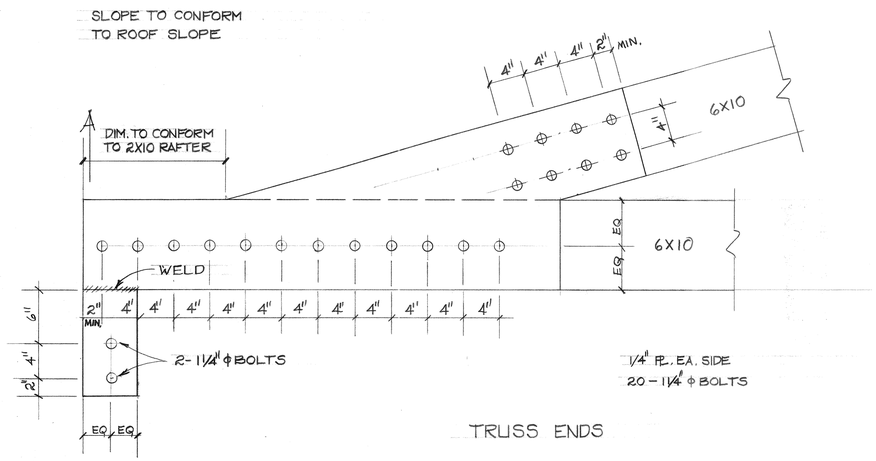

TRUSS ENDS

27 / A-7

1=8"

9/12

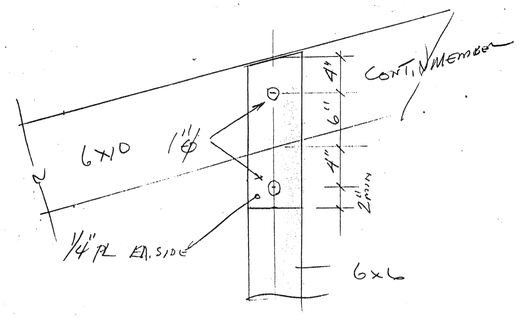

JOINT E.

29 / A-7

1=8"

8/12

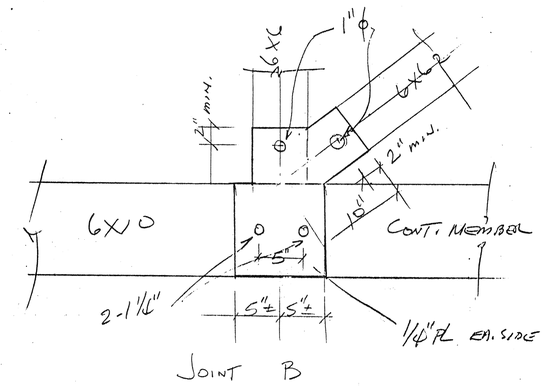

JOINT B

30 / A-7

1=8"

7/12

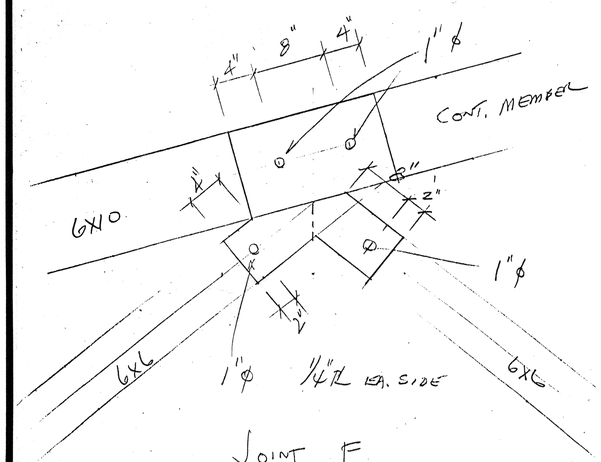

JOINT F

1=8"

31 / A-7

12/12

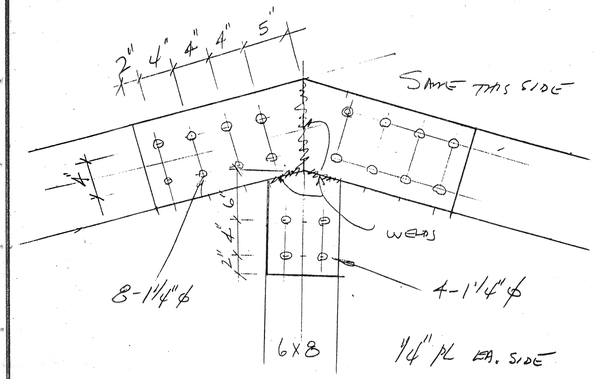

JOINT G

1=8"

32 / A-7

10/12

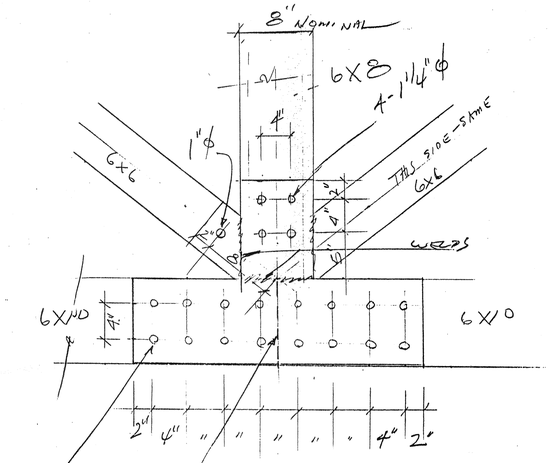

PERMISSIBLE JOINT

16-1 1/4" ϕ
1/4" PL EA. SIDE

JOINT C

33 / A-7

1=8"

11/

Cole & Frick Architects, A.I.A.

4195 Chestnut Street
Riverside, California
92501 714/684-4011

BOATHOUSE for FAIRMOUNT PARK

CITY OF RIVERSIDE
PARK & RECREATION DEPARTMENT

REVISIONS TO PLAN
P-0113

REVISIONS
4 9-12-94

DRAWN BY

DATE:
JOB NUMBER

S-5A
SHEET NO.
OF

PLAN NO. P-0113

ELECTRICAL SYMBOLS

- CONDUIT RUN, CONCEALED IN CEILING OR WALLS.
- CONDUIT RUN, UNDERGROUND OR UNDER SLABS.
- CROSS LINES ON CONDUIT RUNS INDICATE NUMBER OF #12 WIRES CONTAINED THEREIN. 2#12 ARE INDICATED WHEN CROSS LINES ARE NOT SHOWN.
- A-1, 3, 5 — CONDUIT HOME RUN TO ELECTRICAL PANEL. LETTER INDICATES PANEL & NUMERALS INDICATE CIRCUIT NUMBERS.
- CONDUIT WITH ONE PIECE THREADED GALVANIZED STEEL CAP.
- GROUNDING CONDUIT TO NEAREST ACCESSIBLE COLD WATER MAIN.
- FLUORESCENT LIGHT FIXTURES.
- CEILING LIGHT FIXTURE. INCANDESCENT.
- BRACKET MOUNTING LIGHT FIXTURE, INCANDESCENT.
- EXIT LIGHT FIXTURE. ARROW INDICATES DIRECTIONAL.
- SLAVE UNIT.
- SPOTLIGHT OR FLOODLIGHT.
- A 100 +8'-0" — LIGHTING FIXTURE IDENTIFICATION SYMBOL. LETTER INDICATES TYPE OF FIXTURE. NUMERALS IN LOWER HALF OF HEXAGON INDICATE FIXTURE WATTAGE (INCLUDING BALLAST WHERE APPLICABLE). NUMERAL AT TOP OF HEXAGON INDICATES NUMBER OF FIXTURES REQUIRED. NUMBERS AT BOTTOM OF HEXAGON INDICATE MOUNTING HEIGHT FROM FLOOR TO BOTTOM OF FIXTURE. OMISSION OF MOUNTING HEIGHT INDICATES CEILING MOUNTED.
- SK — SWITCH, KEYED +4'-0" OR AS NOTED.
- Sa — SINGLE POLE TOGGLE SWITCH. LETTER AT BOTTOM INDICATES OUTLETS CONTROLLED. +4-0" OR AS NOTED.
- S3 — THREE WAY TOGGLE SWITCH. +4-0" OR AS NOTED.
- SM — SINGLE POLE MANUAL MOTOR STARTER WITH OVERLOAD. +4-0" OR AS NOTED.
- SM2 — DOUBLE POLE MANUAL MOTOR STARTER WITH OVERLOAD. +4-0" OR AS NOTED.
- BRANCH CIRCUIT PANEL. +6'-0" TO TOP.
- PANEL DESIGNATION.
- MAIN SWITCHBOARD.
- DUPLEX GROUNDING TYPE RECEPTACLE. +1'-0" OR AS NOTED.
- JUNCTION BOX. +1'-0" OR AS NOTED.
- JUNCTION BOX IN ACCESSIBLE CEILING SPACE.
- THERMOSTAT OUTLET. +4-0".
- MOTOR.
- DISCONNECT SWITCH. FUSED & WP. (FUSE SIZE AS PER MOTOR NAME PLATES)
- MAGNETIC MOTOR STARTER. SIZE #1 UNLESS NOTED OTHERWISE.
- CIRCUIT BREAKER. (SINGLE LINE DIAGRAM).
- DENOTES MOUNTING HEIGHT FROM FINISHED FLOOR TO CENTER LINE OF EQUIPMENT UNLESS NOTED OTHERWISE.
- TELEPHONE OUTLET.
- T — TELEPHONE CONDUIT. 1" C.O. OR AS NOTED.

WP WEATHER PROOF
P.B. PULL BOX
C.O. CONDUIT ONLY
NL NIGHT LIGHT
TIS. TIME SWITCH
F&I FURNISH & INSTALL

- 30A — REC. 120V. RATED @ 30 AMP.
- PUSH BUTTON FOR O.H. DOOR (VERIFY TYPE W/DOOR SUPPLIER.)
- SM 2 ADJACENT TO MOTOR

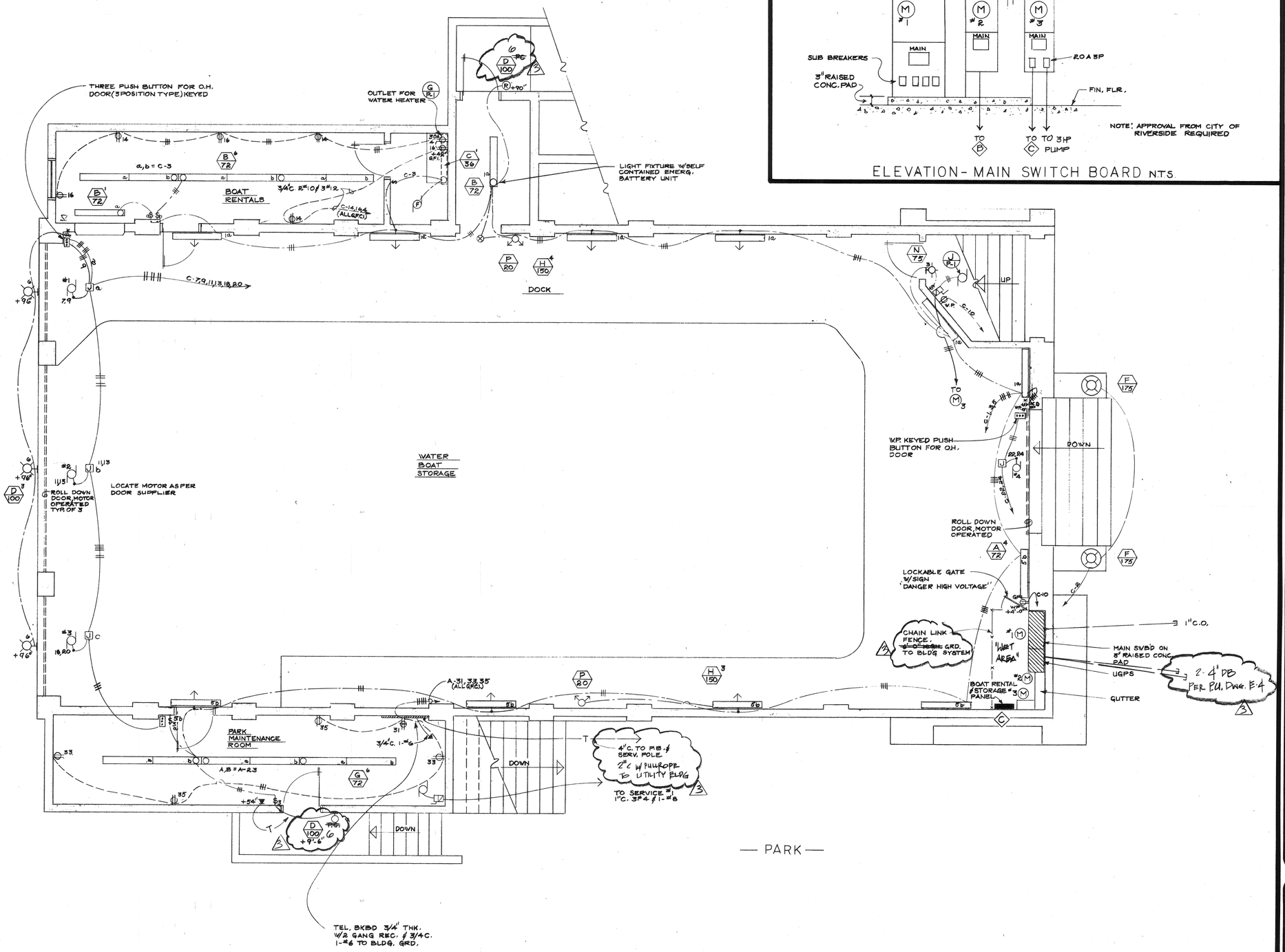

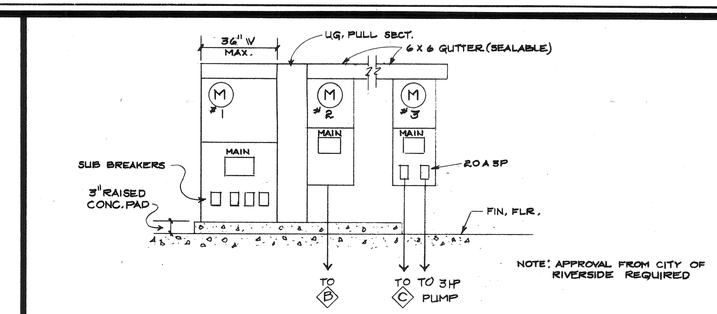

ELEVATION - MAIN SWITCH BOARD N.T.S.

LOWER LEVEL ELECTRICAL PLAN

1/4" = 1'-0"

PLAN NORTH

MARCH 1, 1994

Cole & Frick Architects, A.I.A.
4195 Chestnut Street
Riverside, California
92501 714/684-4011

BOATHOUSE for FAIRMOUNT PARK
CITY OF RIVERSIDE
PARKS & RECREATION DEPARTMENT

LOWER LEVEL ELECTRICAL PLAN

REVISIONS
△3 12-15-93

DRAWN BY

DATE:
JOB NUMBER

E-1
SHEET NO. 18
OF 27

PLAN NO. P-0113

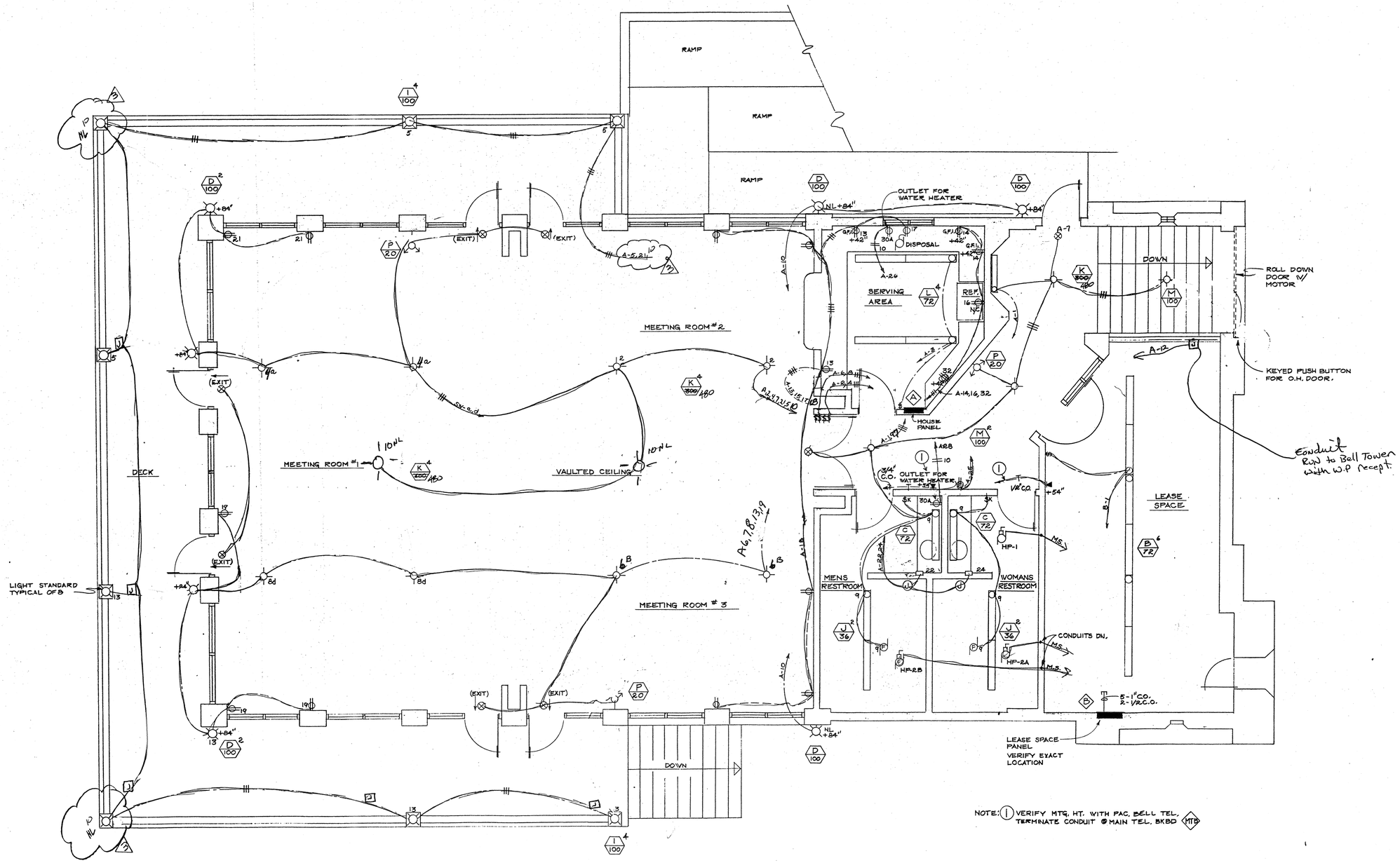

SECOND FLOOR ELECTRICAL PLAN

1/4" = 1'-0"

PLAN NORTH

MARCH 1,1994

PLAN NO. P-01

Cole & Frick Architects

4195 Chestnut Street
Riverside, California
92501 714/684-4011

BOATHOUSE for FAIRMOUNT PARK

CITY OF RIVERSIDE
PARKS & RECREATION DEPARTMENT

SECOND FLOOR
ELECTRICAL PLAN

REVISIONS
A 12.15.93

DRAWN BY

DATE:
JOB NUMBER

E-2
SHEET NO. 19
OF 27

LOAD CENTER 4½" DP W/HINGED DOOR

FLUSH | TYPE NQO | VOLTAGE 120/240V-1φ | BUS 225 AMPS

PANEL A SCHEDULE

CIR NO	c/r amp	brkr pol	no out	TYPE LOAD & LOCATION	WATTS A	WATTS B	WATTS C
1	20	1		LTS.	950		
2	↑	↑		↑	800		
3						280	
4						800	
△ 5					750		
6					800		
7				↓ EXIT		60	
8				LTS.		800	
9				LTS.	900		
▲ 10				LTS. NL	300		
11				SPARE		800	
12				LTS.		800	
13				~~REC.~~ LTS.	600		
14				"	450		
15				REC.		800	
16				REFRIG.		650	
17				DISP.	850		
18				REC.	1000		
19				REC.		600	
20				SPARE		800	
21				REC.	400		
22				HAND DRYER	1000		
23				LTS PARK MAINT.		800	
24	↓			HAND DRYER		1000	
25	20			REC.	800		
26	30			W.H.	1600		
27	20			SPARE		800	
28	30			W.H.		1650	
29	20	↓		SPARE	800		
30	20	1		SPARE	800		
■ 31	20	1		SPARE (W.H. PARK MAINT.)		1650	
32	20	1		REC.		200	
■ 33	20	1		REC. PARK MAINT.			
34							
■ 35	20	1		REC. PARK MAINT.			
36							
37							
38							
39							
40							
41							
42							
KW =		AMPS		SUB-TOTAL	12850	10640	
				TOTAL	23490		

△ F#1 T.S. #1 PHOTOCELL CONTROL, PHOTOCELL ON, TIMECLOCK OFF @ 11:00 PM W/ HOA SWITCH OVERRIDE
■ GFCI TYPE C/B
▲ F#1 ~~T.S. #2~~ PHOTOCELL CONTROL, PHOTOCELL ON, PHOTOCELL OFF W/ HOA SWITCH OVERRIDE

CONTINUOUS LOAD = 6.14 KW X 1.25 = 7.675 KW
NON " " = 17.35 KW X 1.0 = 17.35 KW
25.025 KW = 104.27A

LOAD CENTER 4½" DP W/HINGED DOOR

FLUSH | TYPE NQO | VOLTAGE 120/240V-3φ | BUS 100 AMPS

PANEL B SCHEDULE

CIR NO	c/r amp	brkr pol	no out	TYPE LOAD & LOCATION	WATTS A	WATTS B	WATTS C
1	20	1		LTS.	435		
2	↑	↑		SPARE	800		
3				↑			
4							
5							800
6							800
7					800		
8					800		
9							
10	↓	↓		↓			
11	20	1		SPARE			800
12	↑	↑		SPARE			800
13				↑	800		
14					800		
15							
16							
17	↓	↓		↓			800
18	20	1		SPARE			800
19				SPARE			
20				↑			
21							
22							
23				↓			
24				SPARE			
25							
26							
27							
28							
29							
30							
31							
32							
33							
34							
35							
36							
37							
38							
39							
40							
41							
42							
KW =		AMPS		SUB-TOTAL	4435		4800
				TOTAL			

LOAD CENTER 4½" DP W/HINGED DOOR

FLUSH | TYPE NQO | VOLTAGE 120/240V-1φ | BUS 100 AMPS

PANEL C SCHEDULE

CIR NO	c/r amp	brkr pol	no out	TYPE LOAD & LOCATION	WATTS A	WATTS B	WATTS C
■ 1	20	1		LTS.	900		
2	20	1		LTS.	450		
■ 3	20	1		LTS.		770	
4	30	1		W.H.		1650	
5	20	1		LTS.	800		
6	20	1		LTS. EXTERIOR	450		
7	20	2		ROLL UP DOOR 1½ HP. 10A		1200	
8	20	1		LIGHTING Control		600	
9	—	—		———	1200		
10	20	1		REC.	400		
11	20	2		ROLL UP DOOR 1½ HP. 10A		1200	
12	20	1		SPARE		800	
13	—	—		———	1200		
■ 14	20	1		REC.	600		
15	↑	↑		"		400	
■ 16		↓		"		600	
17		1		REC.	400		
18		2		ROLL UP DOOR	1200		
19		2		" " "		1200	
20	—	—		———		1200	
21	—	—		———	1200		
22	20	2		SPARE	1200		
23	20	1		SPARE		600	
24				SPARE		1200	
25	20	1		SPARE	600		
26	↑	↑		"	600		
27	↓	↓		"		600	
28	20	1		"		600	
29							
30							
31							
32							
33							
34							
35							
36							
37							
38							
39							
40							
41							
42							
21.62 KW =		90 AMPS		SUB-TOTAL	10800	10820	
				TOTAL	21620		

▲ F#1 ~~T.S.~~ PHOTOCELL CONTROL, PHOTOCELL ON, PHOTOCELL OFF W/ HOA SWITCH OVERRIDE
■ GFCI TYPE C/B

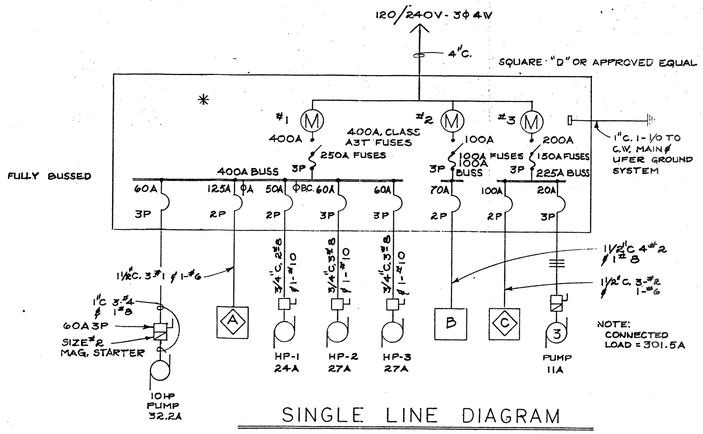

SINGLE LINE DIAGRAM

✳ STINGER LEG SHALL BE IDENTIFIED WITH RED COVER STICKER TAPE

LOAD CALCS:

A LEG = 133 A
B " = 58 A
C " = 149 A
TOTAL CONNECTED = 340 A

LIGHTING FIXTURE SCHEDULE

TYPE	DESCRIPTION	MFR'R & CAT. NO.	LAMPS
L 72	STRIP FLUORESCENT, APPROVED FOR LUMINOUS CEILING	LITHONIA #C-240 (AREA LTG.)	2-34 W.
H 300	PENDANT FIXTURE CHAIN HUNG	THOMAS #SL9340-7	1-100W.
N 75	ABOVE DOOR BRACKET LIGHT FIXTURE PORC. KEYLESS INCANDESCENT	BRYANT #5228 UL EQUAL	75 W.
P 20	WALL MT'D EMERGENCY LIGHT FIXTURE PROVIDE MAINTAINED POWER FOR BATTERY CHARGER	SURE LIGHT #SLHC-2	2-6W. TUNGSTEN HALOGEN

LIGHTING FIXTURE SCHEDULE

TYPE	DESCRIPTION	MFR'R & CAT. NO.	LAMPS
A 72	WALL MTD. FLUORESCENT	PRUDENTIAL #R-5402-RS, EQUAL BY LITHONIA	2-34 W.
B 72	SURFACE FLUORESCENT 1'X4'	LITHONIA #WA-240A	2-34 W.
C 72	BRACKET FLUORESCENT	LITHONIA #WC-240A	2-34 W.
D 100	BRACKET EXTERIOR WITH PHOTO CELL CONTROL REMOTE	WESTERN LTG. STANDARD #PX4130-A39216 W	1-100 W. M.V.
E 10	EXIT LIGHT UNBREAKABLE LENS FOR SLAVE UNITS	LITHONIA SIGNATURE SERIES	2-5 W.
F 175	POLE MTD. LIGHT FIXTURE, TO C.OF R. STANDARDS POLE & BASE - REVERE	WESTERN LTG. STANDARD FX6134-#RV10-6	1-175 W. M.V.
G 72	FLUORESCENT INDUSTRIAL REFLECTOR	LITHONIA #EJ-240	2-34 W.
H 225	BRACKET H.I.D.	KEENE #33175 MM	175 W. M.V. DLX WH
I 100	SAME AS TYPE F EXCEPT MODIFIED FOR MTG.	WESTERN LTG. STANDARD #5530-AC400	1-100 W. M.V.
J 36	VANDAL PROOF FLUORESCENT	FAIL SAFE #FWS-140-120 ESB	1-34 W.
K 300 460	PENDANT FIXTURE - THIS CUSTOM FIXTURE IS AVAIL. THROUGH "HENRY'S IRON FURNITURE WORKS" 7101 JURUPA AVE., RIV., CA. 92506 (909) 689-1861	# 5182 / HENRY 48" Φ 12" CANDLES (40 W)	480 W ~~300 W~~

OR CITY APPROVED EQUAL. SUBMIT SHOP DWG'S FOR CITY APPROVAL.

MARCH 1, 1994

Cole & Frick Architects, A.I.A.
4195 Chestnut Street
Riverside, California
92501 714/684-4011

BOATHOUSE for FAIRMOUNT PARK
CITY OF RIVERSIDE
PARKS & RECREATION DEPARTMENT

PANEL SCHEDULES
LIGHT FIXTURE SCHEDULE
SINGLE LINE DIAGRAM

REVISIONS
1 5-24-93
2 12-15-93

DRAWN BY

DATE:
JOB NUMBER

E-3
SHEET NO. 20 OF 27

PLAN NO. P-0113

BLUELINE As-Built forwarded to Facilities Maintenance 9-27-95

150023

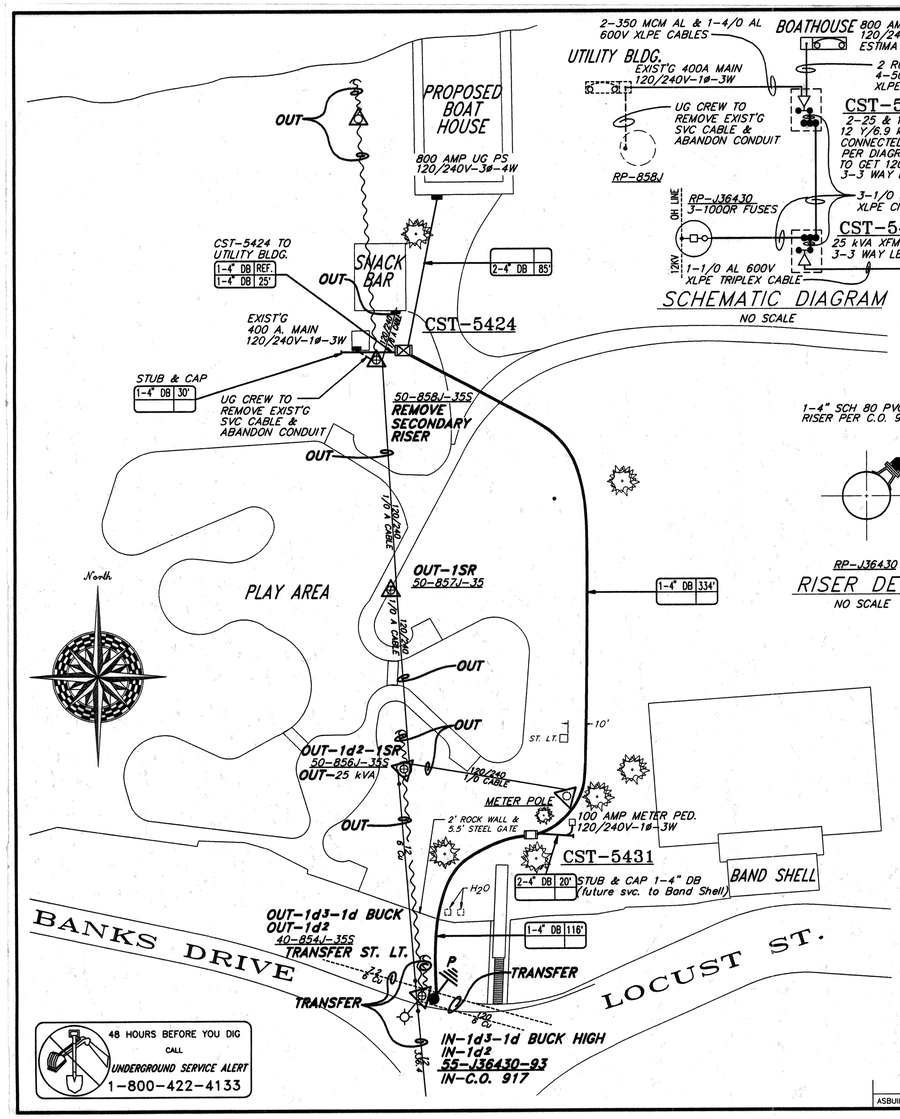

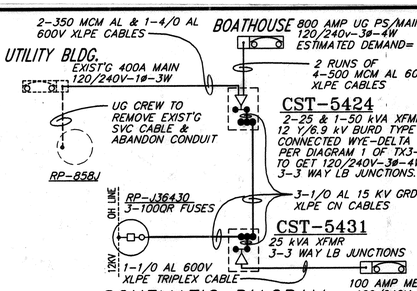

SCHEMATIC DIAGRAM
NO SCALE

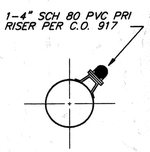

RISER DETAIL
NO SCALE

CUSTOMER PARTICIPATION

1. ALL FACILITIES INSTALLED BY CONTRACTOR SHALL BE INSPECTED AND APPROVED BY THE DEPARTMENT CONSTRUCTION INSPECTOR (PH.782-5429). ANY CHANGES SHALL BE APPROVED BY THE DEPARTMENT PRIOR TO EXECUTION. THE CONTRACTOR SHALL BE RESPONSIBLE FOR COORDINATING ALL PHASES OF CONSTRUCTION WITH THE DEPARTMENT CONSTRUCTION SUP'T. (PH.351-6100) AFTER THE INSPECTOR HAS NOTIFIED CONSTRUCTION THAT THE CONTRACTOR'S WORK IS COMPLETE AND READY FOR DEPT. WORK.
2. PROVIDE AND INSTALL ALL SUBSTRUCTURES, CONDUITS (POLE RISER CONDUIT EXCEPTED), TRENCHING, BACKFILLING, & RESURFACING AS SHOWN IN CONFORMANCE WITH THE FOLLOWING STANDARD DRAWINGS: UGS-100, 100.1, 115.1, & 116.
3. METER ROOM DOOR TO HAVE SCHLAGE LOCK KEYED TO DEPARTMENT MASTER KE'Y; OR DOUBLE HASP.
4. ALL APPLICABLE SERVICE CHARGES TO BE PAID TO THE DEPARTMENT PRIOR TO INSTALLATION OF DEPARTMENT FACILITIES.

DEPARTMENT PARTICIPATION

1. PROVIDE AND INSTALL ALL POLE RISER CONDUITS, CABLES, TERMINATIONS AND TRANSFORMERS FROM SOURCE TO TERMINATING PULLSECTION OR PULLBOX AS SHOWN IN CONFORMANCE WITH STANDARD CONSTRUCTION METHODS. MATERIALS TO BE SPECIFIED ON JOB MATERIAL LISTS.
2. OBTAIN CIRCUIT NUMBER AND RECLOSER TYPE FROM SUBSTATION OPERATOR.

UG LEGEND

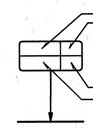

COMMERCIAL SUBSURFACE TRANSFORMER ENCLOSURE (5'X 8'6"X 6'6") W/SOLID RPM COVERS. PER UTILITY VAULT CAT. #586-78 OR EQUAL. DUE TO HIGH WATER TABLE, CUSTOMER SHALL BE REQUIRED TO SILICON SEAL THIS CST BY METHOD OF INJECTION THROUGH STRUCTURE WALLS AFTER BACKFILLING, OR BY ALTERNATIVE METHOD APPROVED BY DEPARTMENT, TO PROTECT STRUCTURE FROM EXCESSIVE WATER DAMAGE. INSTALL PER UGS-751.

COMMERCIAL SUBSURFACE TRANSFORMER ENCLOSURE (4'X 7'X 7') PER ITEM #CST-3 OF UGS-750, INSTALL PER UGS-751

REGISTERED PROFESSIONAL ENGINEER JOHN L. SEVEY No. E 12863 Exp.12-31-96 ELECTRICAL STATE OF CALIFORNIA

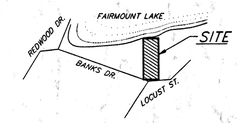

SITE MAP
NO SCALE

PRELIMINARY
NOT FOR CONSTRUCTION

CALL ENGINEERING FOR STAKING

UNDERGROUND/OVERHEAD ELECTRICAL DISTRIBUTION TO
2707 LOCUST ST.
FAIRMOUNT PARK BOAT-HOUSE

SCALE 1"=40'	DRAWN VALDEZ/PHILLIPS	CITY OF RIVERSIDE DEPARTMENT OF PUBLIC UTILITIES	
DATE 8-26-93	CHECKED		
TILE NO. AF16	APPROVED 12/7/93	DIV. E	DRAWING NO. U04-4146-2
JPA NO. CR-6862	BOARD DATE 10-15-93		SHEET 1 OF 1
INV. MAP NO. 9-26,9-27	ACCT. NO. 510-764200-47060		

ASBUILT	APPRVD	REVISIONS	DATE

BOATHOUSE FOR FAIRMOUNT PARK

ELECTRICAL SERVICE PLAN

city of riverside
park & recreation
department
(714) 782-5223
3900 MAIN ST RIVERSIDE, CALIFORNIA 92522

revisions	by
1 12.15.93	A.E.

date	
design	
drawn	
check	
acc't.no.	

SHEET E-4
21 of 27

MARCH 1,1994

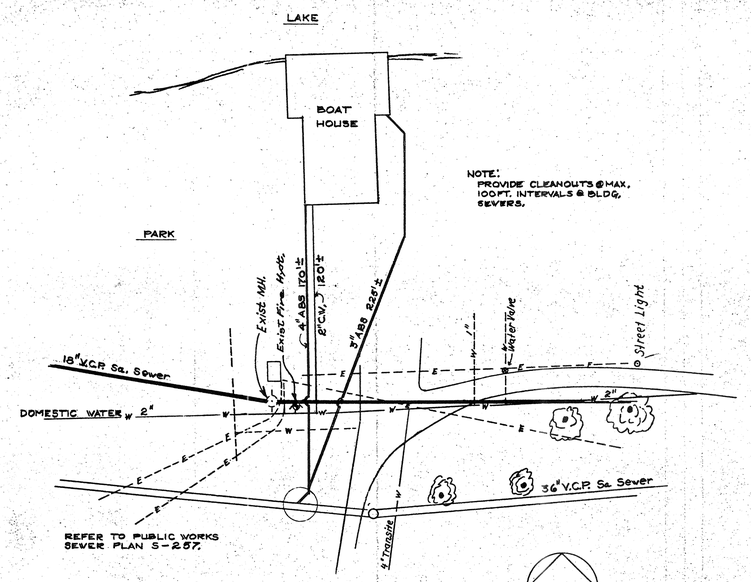

PLOT PLAN 1'=40'

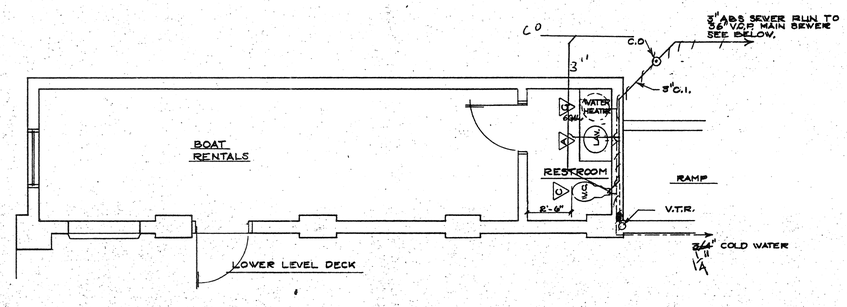

PLUMBING PLAN LOWER LEVEL
1/4" = 1'-0"

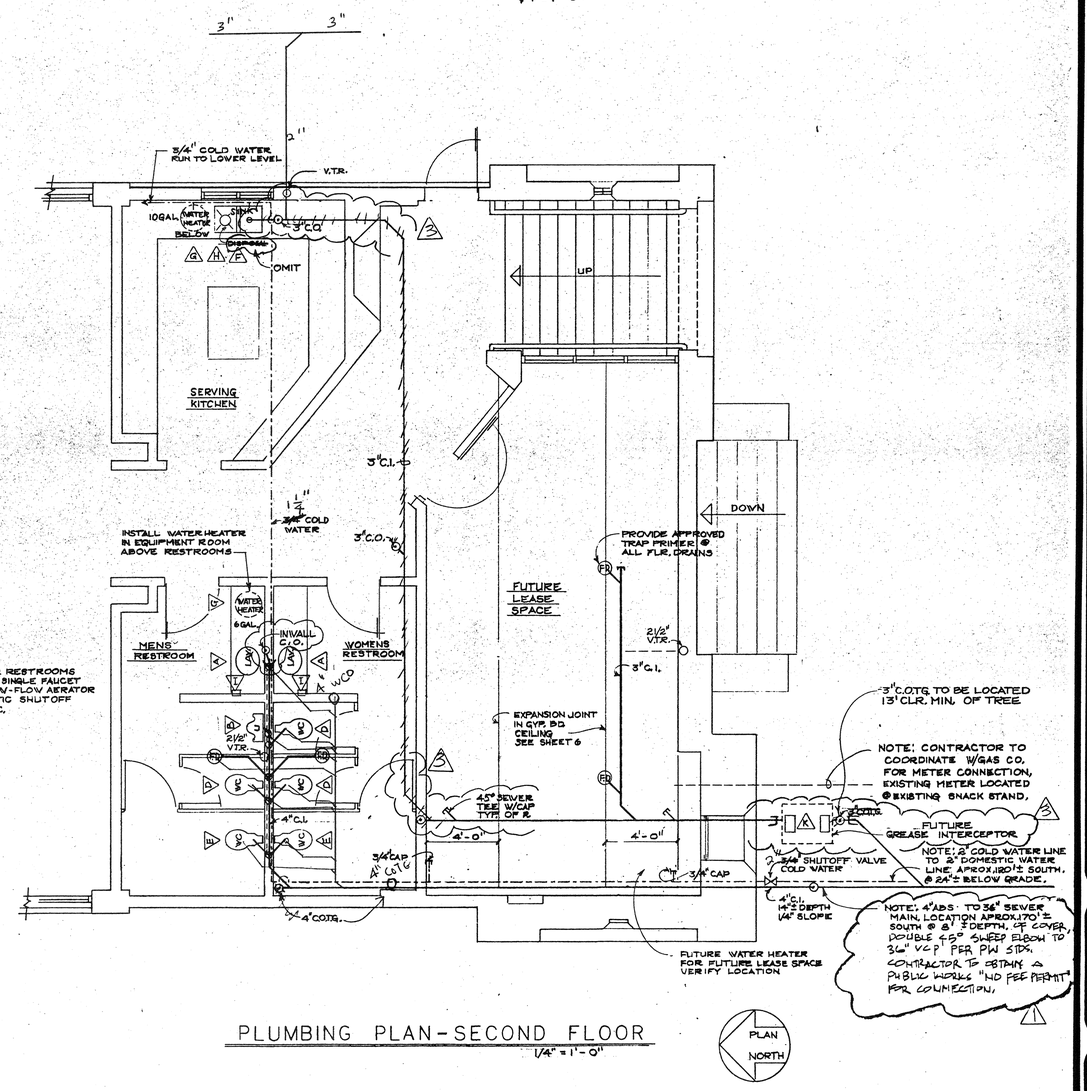

PLUMBING PLAN-SECOND FLOOR
1/4" = 1'-0"

FIXTURE CONNECTIONS

FIXTURE	ABBREV.	W.	V.	C.W.	REMARKS
WATER CLOSET	W.C.	4"	2"	1½"	
LAVATORY	LAV.	2"	1½"	1/2"	
URINAL	U.	2"	1½"	3/4"	
HOSE BIBB	H.B.	—	—	3/4"	
SINK		2"	2"	3/4"	

FIXTURE SCHEDULE

TYPE	DESCRIPTION	MFR. & CAT. NO.
A	LAVATORY- AQUALYN COUNTERTOP COLOR - WHITE 4" SPREAD FAUCET	AMERICAN STANDARD #0475.028
B	URINAL - WASHBROOK WALLMOUNT COLOR - WHITE WATER SAVER 1.0 GAL	AMERICAN STANDARD #6501.010, SLOAN 186 VALVE
C	WATER CLOSET- AFWALL WATER SAVER TOILET, COLOR - WHITE	AMERICAN STANDARD #2477.024, SLOAN 111 VALVE
D	WATER CLOSET- WATER SAVER MADERA TOILET, COLOR- WHITE	AMERICAN STANDARD #2221-026, SLOAN 111 VALVE
E	WATER CLOSET- CADET ELONGATED WATER SAVER TOILET, COLOR-WHITE	AMERICAN STANDARD #9469.016, SLOAN 111 VALVE
F	SINK - STAINLESS STEEL DOUBLE BOWL	
G	WATER HEATER- 6 GAL ELECT. 1650 WATT 10 GAL ELECT. 1650 WATT.	STATE PV-6-10MS-K " PV-10-10MS-K
H	~~GARBAGE DISPOSAL- STAINLESS 1/2 H.P.~~ ~~OMIT~~	~~BADGER ISE-333~~ △3
I	HAND DRYER - 1/4" DIE-CAST ALUM. HOUSING, WALL-MOUNT 50 CU. FT. P.M.	FASTAIRE HAND DRYER CO. HUMPHREY #HD-02
J	PUMP - 1½" NTP BRONZE CASING & IMPELLER 110 GPM 1½ H.P. 230V. W/STRAINER	TEEL 2P091 STRAINER 1P999

NOTE:
2ND. FLOOR RESTROOMS LAV'S USE SINGLE FAUCET ONLY W/LOW-FLOW AERATOR W/AUTOMATIC SHUTOFF MIN. 10 SEC.

MARCH 1, 1994

Cole & Frick Architects, A.I.A.
4195 Chestnut Street
Riverside, California
92501 714/684-4011

BOATHOUSE for FAIRMOUNT PARK
CITY OF RIVERSIDE
PARKS & RECREATION DEPARTMENT

PLUMBING PLAN

REVISIONS
△1 5.24.93
△2 12.15.93

DRAWN BY
RS

DATE: 10/10/91
JOB NUMBER
P-1
SHEET NO. 22
OF 27

PLAN NO. P-6113

BLUELINE AS BUILT FORWARDED TO FACILITIES MAINTENANCE 9.27.95

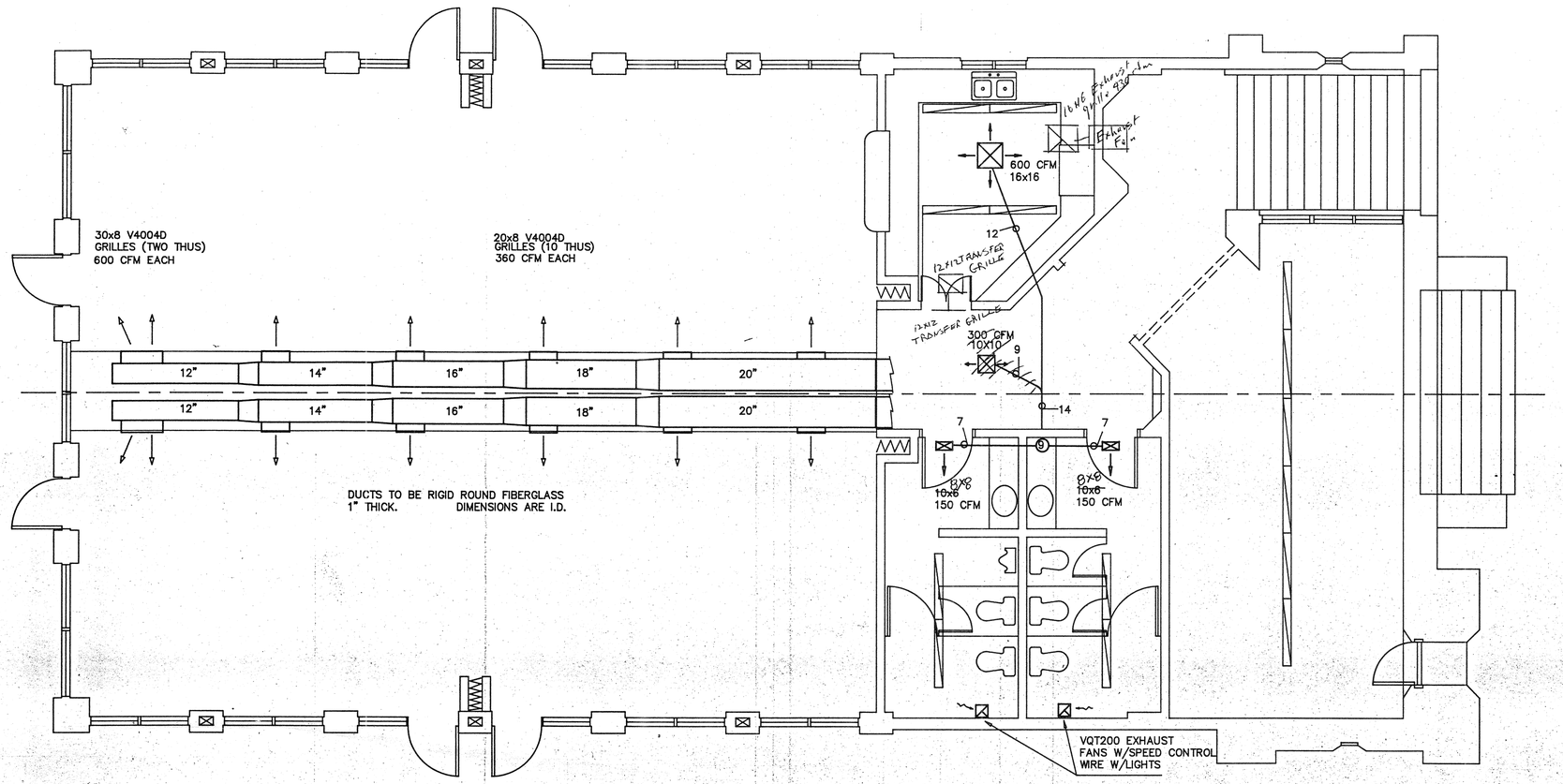

NOTE:

EQUIPMENT ROOM WALLS & CEILING TO BE LINED WITH 5/8" SHEET ROCK. FLOOR TO BE 3/4" PLYWOOD.

HEAT PUMP UNITS TO BE SUSPENDED FROM ROOF STRUCTURE, W/BOTTOM 6" ABOVE FLOOR.

SEE SHEET M-2 FOR WATER PIPING DETAILS.

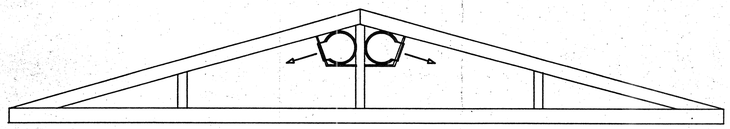

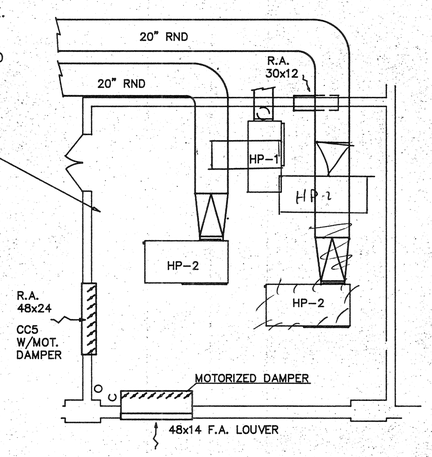

PLAN VIEW
EQUIPMENT ROOM, OVER REST ROOMS

SPECIFICATIONS

GENERAL
THE AIR CONDITIONING CONTRACTOR SHALL FURNISH AND INSTALL ALL AIR CONDITIONING UNITS, EXHAUST FANS, AND CONTROLS, TOGETHER WITH ALL DUCTS, GRILLES AND REGISTERS AS SHOWN ON THE PLANS. ALL ITEMS AS LISTED IN THESE SPECIFICATIONS AND THE SCHEDULE SHOWN ON THE PLANS SHALL BE FURNISHED AND INSTALLED BY THE AIR CONDITIONING CONTRACTOR.

AIR CONDITIONING SYSTEMS
THE AIR CONDITIONING UNITS SHALL CONSIST OF CARRIER WATER SOURCE HEAT PUMPS UNITS AS SHOWN ON THE PLANS AND AS LISTED IN THE SCHEDULE.

CONTROL SYSTEMS
A CARRIER TEMP CONTROL SYSTEM, WITH INDIVIDUAL, COMPUTERISED ROOM THERMOSTATS, ATTATCHED RELAY PACKS, CONNECTING COMMUNICATION BUS AND OTHER REQUIRED DEVICES FOR THE COMPLETE CONTROL OF THE WATER SOURCE HEAT PUMPS, INCLUDING CONTROL OF THE FRESH AIR & RETURN AIR DAMPERS. SYSTEM SHALL BE CAPABLE OF INTERFACING WITH A MODEM ALLOWING FOR REMOTE ACCESS.

AIR DISTRIBUTION SYSTEM
THE AIR CONDITIONING CONTRACTOR SHALL FURNISH AND INSTALL ALL SUPPLY AND RETURN DUCTS AS SHOWN ON THE PLANS. RECTANGULAR DUCTS AND PLENUMS SHALL BE GALVANIZED IRON OF GAUGES AND CONSTRUCTION AS SHOWN IN THE "SMACNA" MANUAL. ROUND DUCTS WHERE INDICATED IN THE ATTIC SHALL BE ALUMINUM FLEXDUCT, WITH INSULATION RATED AT A MINIMUM OF R-4.2. ALL JOINTS SHALL BE SECURED WITH METAL SCREWS AND SEALED WITH AN APPROVED DUCT TAPE. FLEXDUCTS SHALL BE SUSPENDED FROM THE ROOF STRUCTURE IN SUCH A MANNER AS TO PREVENT SAGGING.

THE SUPPLY AND RETURN DIFFUSERS AND GRILLES SHALL BE METALAIRE, TYPE AND SIZE AS INDICATED ON THE PLANS. IT SHALL BE THE RESPONSIBILITY OF THE AIR CONDITIONING CONTRACTOR TO CHECK WITH LOCAL AUTHORITIES REGARDING ANY REQUIREMENT FOR FIRE DAMPERS, AND SHALL INSTALL SAME WHERE REQUIRED.

EXHAUST FANS
THE AIR CONDITIONING CONTRACTOR SHALL FURNISH AND INSTALL ALL EXHAUST FANS WHERE INDICATED. THESE SHALL BE INSTALLED COMPLETE WITH REQUIRED DUCTS IN ACCORDANCE WITH LOCAL CODE REQUIREMENTS.

CONDENSATE DRAINS
THE AIR CONDITIONING CONTRACTOR SHALL FURNISH AND INSTALL ALL CONDENSATE DRAIN LINES FROM THE AIR CONDITIONING UNITS TO DRAIN FACILITY AS PROVIDED BY OTHERS. PVC PIPING (SCHEDULE 40) MAY BE USED FOR THIS PURPOSE, IF APPROVED BY LOCAL AUTHORITIES. PROVIDE VENTED TRAPS AT EACH UNIT LOCATION.

POWER WIRING
ALL POWER WIRING, INCLUDING FINAL CONNECTION TO THE UNIT, SHALL BE FURNISHED AND INSTALLED BY THE ELECTRICAL CONTRACTOR.
THE ELECTRICAL CONTRACTOR SHALL ALSO PROVIDE CONDUIT ONLY, TO THE LOW VOLTAGE THERMOSTAT LOCATIONS.

WARRANTY
THE AIR CONDITIONING CONTRACTOR SHALL PROVIDE START-UP SERVICE AND AIR BALANCE UPON COMPLETION OF THE INSTALLATION, AND SHALL FURNISH LABOR AND MATERIAL FOR ANY DEFECTS IN MATERIAL AND WORKMANSHIP FOR A PERIOD OF ONE YEAR FROM START-UP DATE, AT NO ADDITIONAL COST TO THE OWNER. THE MANUFACTURER'S EXTENDED WARRANTY ON THE COMPRESSORS SHALL BE GIVEN TO THE OWNER UPON COMPLETION OF THE CONTRACT.

CERTIFICATE OF COMPLIANCE (part 3 of 3) CF-1B page 5 of 34
Project: Boathouse for Fairmount Park | COMPLY 24 v 3.10
Designer: Cole & Frick | Building Permit No
Location: Riverside FS 3 Date: 1/20/1992 | Checked By
Documentation: ENERGY Calc SERVICES, INC. | Date (User # 1061)

Note: More than one Part 3 may be submitted, but all must reference the same Parts 1 & 2. The person responsible for preparing the compliance documentation for each major building system acknowledges the following compliance statement by signing the appropriate space below.

Compliance Statement. The proposed building improvements substantially comply with the requirements indicated on the Certificate of Compliance for this building, dated _____. The plans and specifications include the significant energy conservation features and the compliance documentation is consistent with the plans and specifications.

ENVELOPE	Modeled
1 Average Roof/Ceiling Rt	27.46
2 Average Exterior Floor Rt	20.27
3 Average Opaque Wall Rt	9.55
4 Glazing Area in Wall	705
5 Average SC (Wall)	0.31
6 Glazing Area in Roof	0
7 Average SC (Roof)	0.00

Other Requirements:

Improvements
Plans Dated _____ Specs Dated _____
Signature _____ Date _____
Name
Company
Address
City/State/Zip
Telephone _____ License _____
Enforcement Agency _____

LIGHTING	Modeled
8 Basis of Allowed LPD	Performance
9 Pack A or WS-5C LPD	1.500
10 Package Lighting Red.	<-0.250>
11 Allowed Adjusted LPD(CF-5)	1.750
12 Lighting Control Credits?	No

Other Requirements:

Improvements
Plans Dated _____ Specs Dated _____
Signature _____ Date _____
Name
Company
Address
City/State/Zip
Telephone _____ License _____
Enforcement Agency _____

MECHANICAL	Modeled
13 Fan Wattage Index	0.927
14 Rated Cooling Efficiency	11.66
15 Rated Cooling Capacity	189400
16 Rated Heating Efficiency	4.15
17 Rated Heating Output	225100
18 Economizer Cooling?	No
19 Simultaneous Heat/Cool?	No

Other Requirements:

Improvements
Plans Dated _____ Specs Dated _____
Signature Theo E. Naylor Date 1-20-92
Name Theo E. Naylor
Company ENERGY Calc SERVICES INC.
Address 16551 Mockingbird Canyon Drive
City/State/Zip Riverside, CA 92504
Telephone (714) 780-7265 License 23045
Enforcement Agency _____

CERTIFICATE OF COMPLIANCE (part 2 of 3) CF-1B page 4 of 34
Project: Boathouse for Fairmount Park | COMPLY 24 v 3.10
Designer: Cole & Frick | Building Permit No
Location: Riverside FS 3 Date: 1/20/1992 | Checked By
Documentation: ENERGY Calc SERVICES, INC. | Date (User # 1061)

ENERGY ANALYST. The energy performance analysis summarized below was performed using an approved CEC calculation method, with CEC approved fixed and restricted engineering inputs for the applicable climate zone and occupancy type, and using a reasonable representation of building zoning and physical configuration. All significant energy conservation features are listed below, or on an attached supplement.

Signature: Theo E. Naylor Date: 1-20-92

ENERGY Calc SERVICES, INC.
16551 Mockingbird Canyon Drive
Riverside, California 92504
(714) 780-7265

Job #: RK114

		REFERENCE	
GENERAL			
1	Unconditioned or Multi-tenant Shell?		No
2	CEC Occupancy Type		Office
3	UBC Occupancy Group/Division		A-2
4	Climate Zone	WS-1A	10
5	Conditioned Floor Area	WS-1A	2439 sqft
6	Unconditioned Floor Area	WS-1A	540 sqft
7	Budget Table (from Standards)	1988 ed.	Sec 2-53
8	Allowed Energy Budget	WS-1A	189.0
9	Calculation Method CEC Code/Date	CPO-07	6/28/1988
10	Multiplier	CEC	1.027
11	Calculated Energy Use	WS-1A	159.0 kBtu/sqft-yr
ENVELOPE REQUIREMENTS			
12	Average Roof/Ceiling Rt	CF-2	27.46 h-F-sqft/Btu
13	Average Exterior Floor Rt	CF-2	20.27 h-F-sqft/Btu
14	Average Opaque Wall Rt	CF-2	9.55 h-F-sqft/Btu
15	Glazing Area in Wall	CF-2	705 sqft
16	Average SC (Glazing in Wall)	CF-2	0.31
17	Glazing Area in Roof	CF-2	0 sqft
18	Average SC (Glazing in Roof)	CF-2	0.00
LIGHTING REQUIREMENTS			
19	Whole Building Allowed Adjusted LPD	CF-5	1.750 watts/sqft
20	Package Lighting Reduction	WS-1A	-0.250 watts/sqft
23	Lighting Controls Required?	CF-5	No
MECHANICAL REQUIREMENTS			
24	System Type		Heat Pump
25	Fan Wattage Index	CF-4	0.927 watts/sqft
26	Rated Cooling Efficiency	CF-4	11.66 (EER)
27	Rated Cooling Capacity	CF-4	189400 Btu/hr
28	Rated Heating Efficiency	CF-4	4.15 (SSB/COP)
29	Rated Heating Capacity	CF-4	225100 Btu/hr
30	Economizer Cooling?	CF-4	No
31	CF-1X Attached?		Yes

CERTIFICATE OF COMPLIANCE (part 1 of 3) CF-1B page 3 of 34
Project: Boathouse for Fairmount Park | COMPLY 24 v 3.10
Designer: Cole & Frick | Building Permit No
Location: Riverside FS 3 Date: 1/20/1992 | Checked By
Documentation: ENERGY Calc SERVICES, INC. | Date (User # 1061)

PRINCIPAL DESIGNER. The proposed building will be in substantial compliance with the California Building Energy Efficiency Standards provided it is built according to the plans and specifications and provided future improvements are completed according to the requirements indicated on this Certificate of Compliance. The plans and specifications have been prepared to include all significant energy conservation features required for compliance with the Standards. Building areas that are unconditioned and/or not subject to the standards are indicated on the plans.

Plans Dated: _____ Specs Dated: _____

Signature: _____ Date: _____

Cole & Frick
4195 Chestnut Street
Riverside, California 92501
(714) 684-4011
Cal. License No:

OWNER. The energy conservation features and performance specifications indicated on this document and on the plans and specifications shall apply to future alterations, unless compliance is demonstrated anew and a new Certificate of Compliance is submitted. A copy of this certificate will be retained and transmitted to future tenants, subsequent owners or others with responsibility for making improvements or modifications to the building. If this certificate is lost, a new Certificate may be required before a permit is issued for alterations. Unconditioned areas are indicated on the plans and, if these areas are conditioned in the future, they must be made to comply with the applicable energy standards then in effect.

Signature: _____ Date: _____

City of Riverside Parks & Recreation Dep

Riverside, California

ENFORCEMENT AGENCY. The proposed building, and future alterations will comply with the California Building Energy Efficiency Standards, provided future alterations meet the requirements indicated on this Certificate and all applicable mandatory measures, as long as the building occupancy type remains unchanged.

Signature: _____ Date: _____

Name:
Agency:
Address:
City/State/Zip:

MARCH 1,1994

REVISIONS	BY
2.12.93	

BOATHOUSE for FAIRMOUNT PARK
CITY OF RIVERSIDE
PARKS & RECREATION DEPARTMENT

MECHANICAL PLAN

DATE 1-8-92
SCALE 1/4"=1'-0"
DRAWN BY TE
JOB NO. RK114
SHEET 23 M-1 OF 27 SHEETS

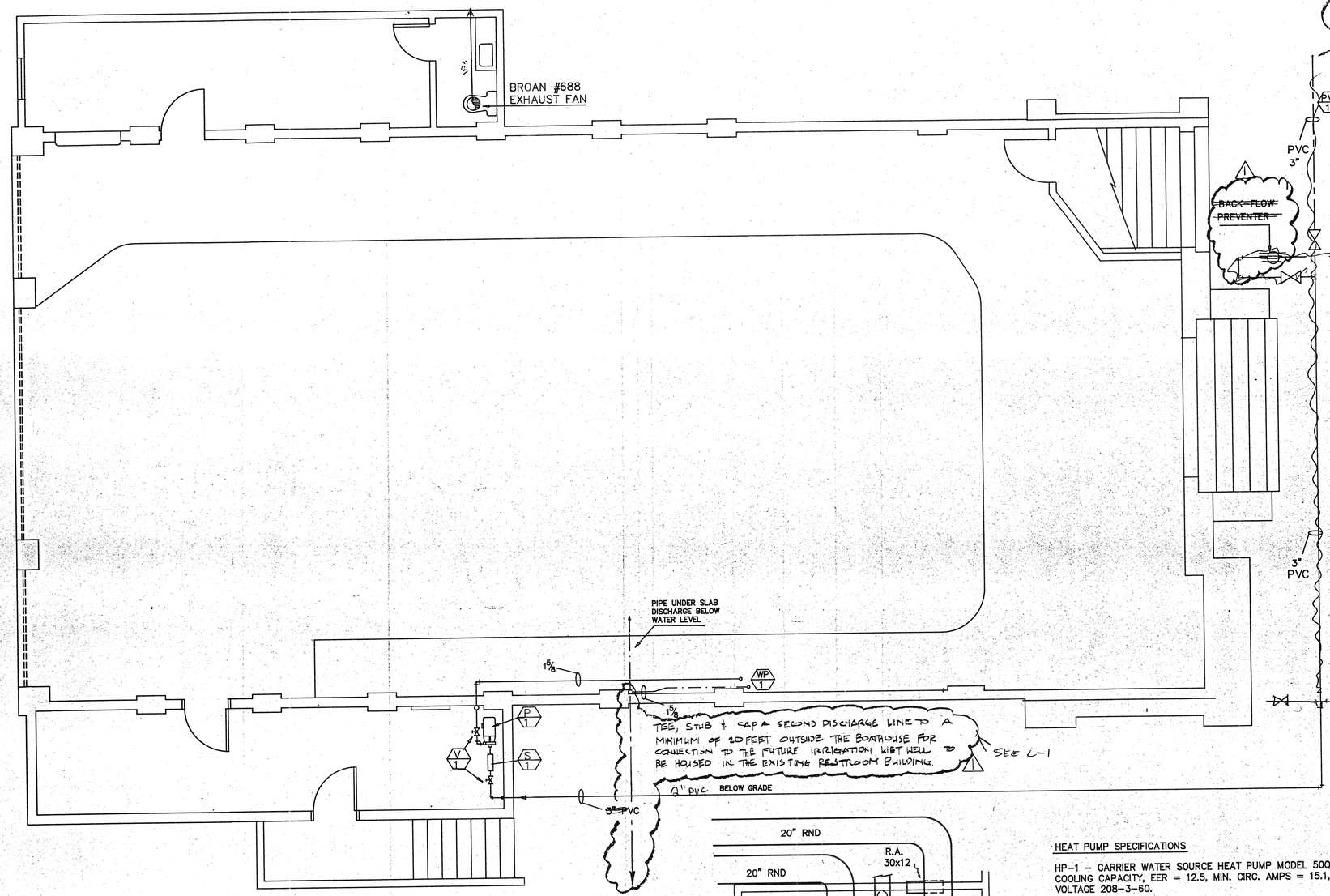

~~3" PVC LINE FOR CONNECTION TO LAKE WATER SUPPLY AT FOOT BRIDGE. (APPROX. 400') FIELD VERIFY~~

ADDITIVE BID ITEM II-E WORK: 3" PVC LINE, INCLUDING LINE SIZED GATE VALVE, BACKFLOW DEVICE, FILTRATION SYSTEMS, CONTROL EQUIPMENT & WIRES & ALL RELATED WORK FOR CONNECTION TO LAKE WATER SUPPLY AT FOOT BRIDGE. (APPROX. 400') FIELD VERIFY.

~~2" LINE TO NEAREST WATER SUPPLY (APPROX. 200') FIELD VERIFY~~

BASE BID WORK: P.O.C. FOR THE 2 INCH PVC HVAC WATER LINE SHALL BE THE DOMESTIC WATER SERVICE LINE AS NOTED ON DRAWING P-1, SHEET 20 OF 25. THIS WORK INCLUDES THE INSTALLATION OF A LINE-SIZED TEE CONNECTION WITH STUB-OUT FOR ADDITIVE BID ITEM II. E WORK.

Typical piping and wiring

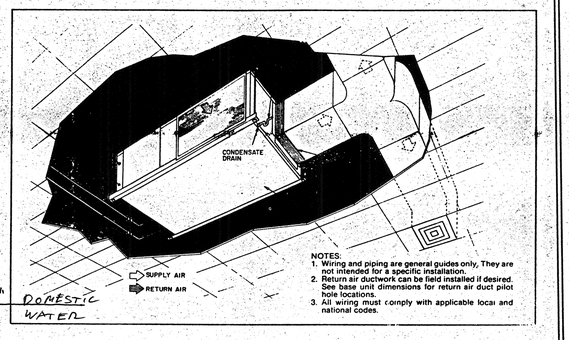

NOTES:
1. Wiring and piping are general guides only. They are not intended for a specific installation.
2. Return air ductwork can be field installed if desired. See base unit dimensions for return air duct pilot hole locations.
3. All wiring must comply with applicable local and national codes.

NOTES

P 1 — WATER SUPPLY PUMP, BELL & GOSSET SERIES 1531, MODEL 313TB, 2"x1-1/2", 50 GPM @ 80' HEAD, WITH 2HP 208-3-60 MOTOR & MAGNETIC STARTER.

S 1 — WILKINS Y-STRAINER SERIES YSBR, W 100 MESH SCREEN. BRASS BODY.

V 1 — GATE VALVES, SIZED SAME AS PIPE SIZE. RISING STEM TYPE.

HP 1 — PROVIDE SUPPLY & RETURN BALL VALVES AT EACH UNIT, BALL & STEM TYPE, UL LISTED BRASS BODY WITH TEFLON SEATS & SEALS. (HP-1 3/4"), (HP-2 1"), TOGETHER WITH 36" LONG EPDM TUBE (HOSE KIT) WITH TEFLON SEAL ON THREADED CONNECTIONS ON EACH END.
PROVIDE CONDENSATE LINE FROM EACH UNIT TO DRAIN CONNECTION BELOW SINK IN MENS RESTROOM.

WP 1 — WATER SUPPLY & RETURN LINES TO BE TYPE K COPPER WITH BRAZED SWEAT JOINTS. RUN LINES BELOW 6x8 BEAM, ABOVE CEILING.

PVC 1 — ALL PVC PIPING FOR WELL WATER SUPPLY TO BOAT HOUSE AND HEAT PUMP SYSTEM TO BE PROVIDED BY CONTRACTOR. DISTANCES TO CONNECTION POINTS TO BE VERIFIED IN FIELD.

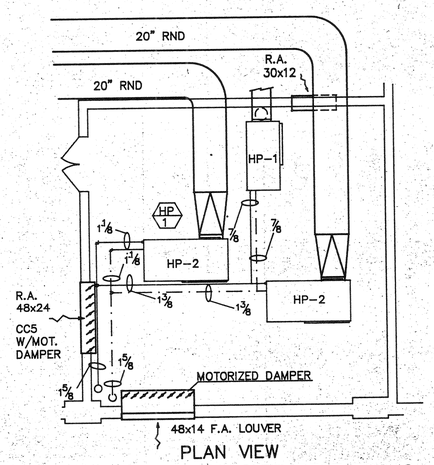

PLAN VIEW
EQUIPMENT ROOM, OVER REST ROOMS

HEAT PUMP SPECIFICATIONS

HP-1 — CARRIER WATER SOURCE HEAT PUMP MODEL 50QEH-036, 35,800 BTU/HR COOLING CAPACITY, EER = 12.5, MIN. CIRC. AMPS = 15.1, MAX FUSE SIZE 20 VOLTAGE 208-3-60.

HP-2 — CARRIER WATER SOURCE HEAT PUMPS MODEL 50QEH-072, 70,000 BTU/HR COOLING CAPACITY, EER = 11.4. MIN. CIRC. AMPS = 31.8, MAX FUSE SIZE = 50 VOLTAGE 208-3-60

CONTROL SYSTEM — CARRIER TEMP CONTROL SYSTEM WITH MONITOR STATS AND PGCT PROGRAMMABLE CONTROLLER.

QUOTE AS OPTION, AN ISOSTAT & MODEM FOR REMOTE COMPUTER MONITORING OF SYSTEM.

LOWER LEVEL MECHANICAL PLAN

MARCH 1,1994

REVISIONS	BY
1 3-24-93	

BOATHOUSE for FAIRMOUNT PARK
CITY OF RIVERSIDE
PARKS & RECREATION DEPARTMENT

MECHANICAL PLAN

DATE 2-24-93
SCALE 1/4"=1'-0'
DRAWN BY TET
JOB NO. RK114P
SHEET 24 M-2 OF 27 SHEETS

BLUELINE AS BUILT FORWARDED TO FACILITIES MAINTENANCE 9.27.95

PLAN NO. P-0113

Planting Schedule

	SYM	QTY	SIZE	BOTANICAL NAME/COMMON NAME
SHRUBS	⊕	200	1GAL	BUXUS M.J. 'GREEN BEAUTY' / BOXWOOD (HEDGE @ 24" HEIGHT)
	C	14	5GAL	CARISSA M. 'GREEN CARPET' / NATAL PLUM
	E	3' OC.	5GAL	EURYOPS PECTINATUS / NCN
	RY	9	5GAL	PYRACANTHA F. 'SANTA CRUZ' / FIRETHORN
GROUNDCOVER		6" OC	PONY PAC.	ANNUAL COLOR / PER CITY OF RIVERSIDE PARK & REC. DEPARTMENT
		12" OC	FLATS	GAZANIA FL. 'RED & ORANGE' / CLUMPING GAZANIA (MIX COLOR)
		—	—	RAKED SOIL / REMOVE DEBRIS & WEED FROM PLANTER AREAS

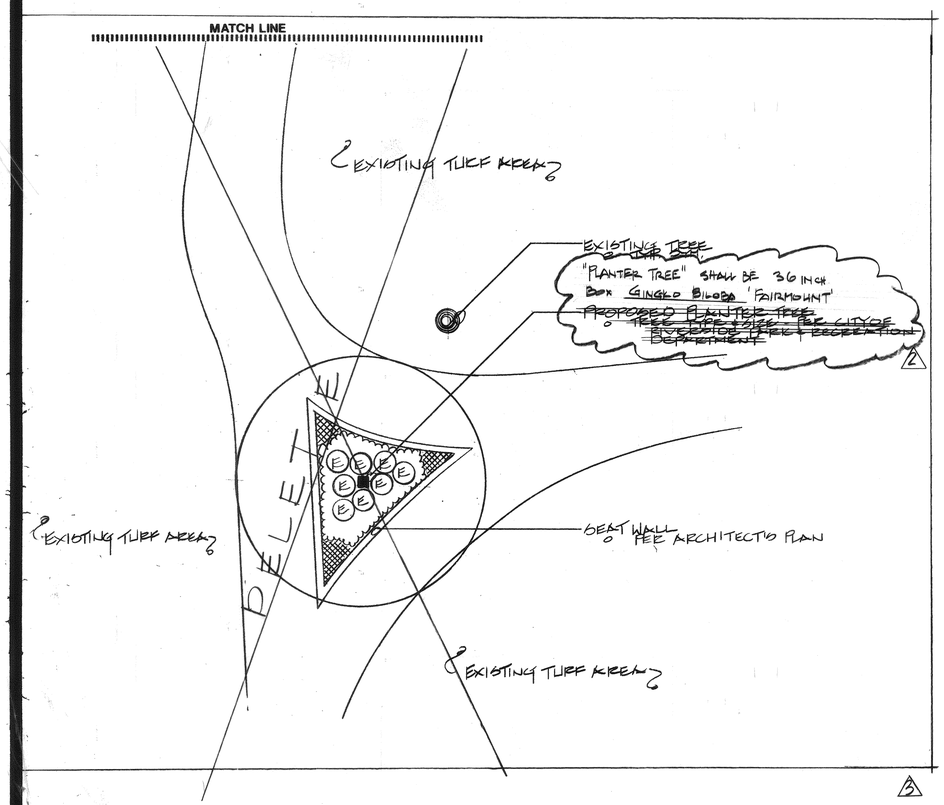

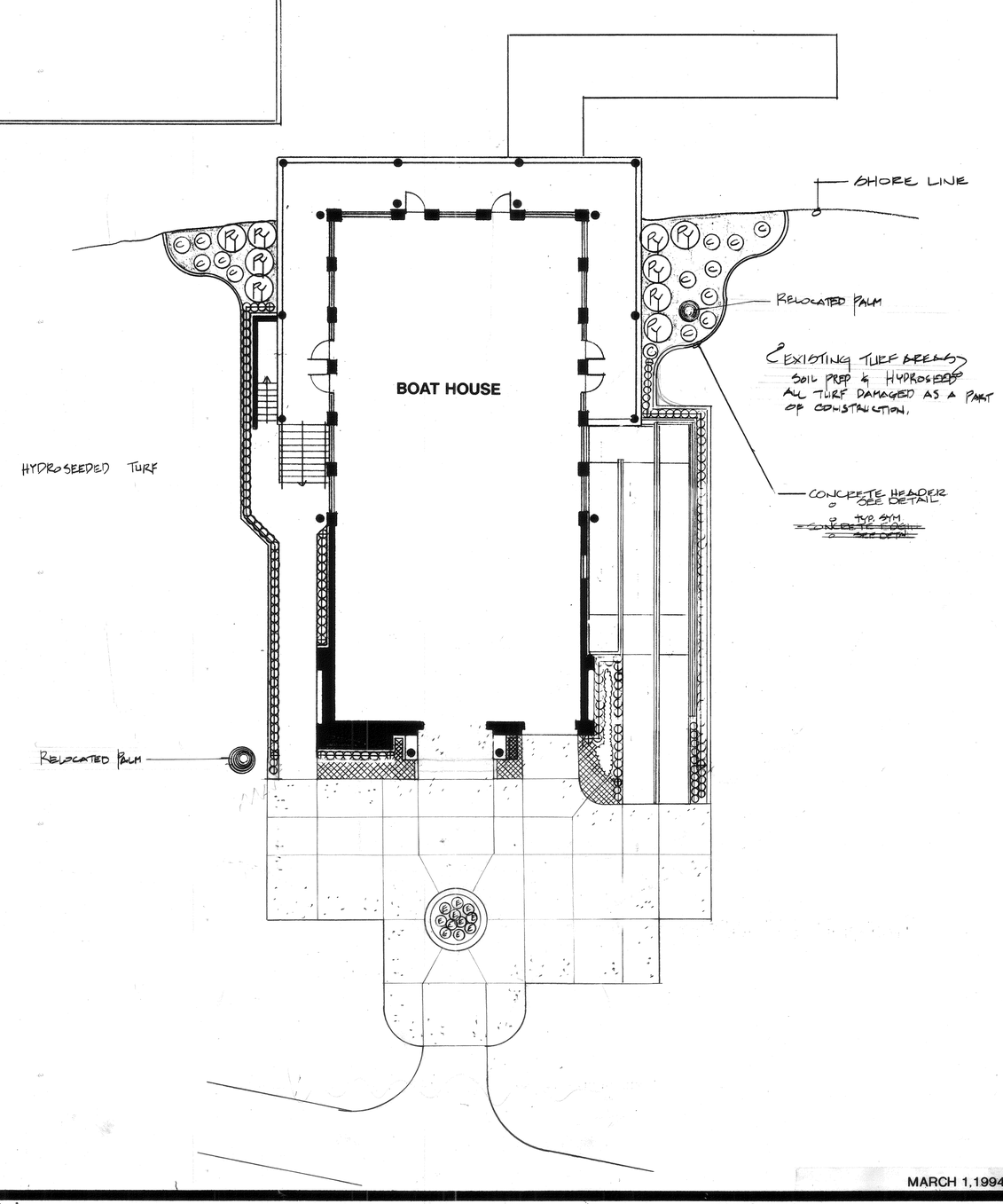

IMPORTANT NOTICE
Section 4216/4217 of the Government Code requires a Dig Alert Identification Number be issued before a Permit to Excavate will be valid For your Dig Alert I.D. Number Call Underground Service Alert TOLL FREE 1-800-422-4133 Two working days before you dig

NORTH

REGISTERED LANDSCAPE ARCHITECT A. James Montgomery 1902 Signature Date STATE OF CALIFORNIA

MARCH 1,1994

© Copyright 1991 All Rights Reserved - A. James Montgomery, Landscape Architect

Revisions:
4 5.24.93
3 12.15.93

Design, plans and specifications in this drawing shall not be used or reproduced in whole or in part for any

A. James Montgomery & Assoc., Inc.
LANDSCAPE ARCHITECTURE

BOATHOUSE for FAIRMOUNT PARK
CITY OF RIVERSIDE

Planting Plan

drn. by: JR
date: 10-9
scale: 1"=1
page: 25
L-1
OF 27
PN - 9141

PLAN NO. P-01

IRRIGATION SPECIFICATIONS

A. EXTENT: Includes furnishing all labor, materials and equipment for the proper installation of the irrigation system. The work includes, but is not necessarily limited to, the following:

1. Trenching and Backfill
2. Automatically Controlled Irrigation System
3. Testing all systems and making operative
4. "As-Built" Drawings

B. GENERAL:

1. Permits and Fees: obtain all permits and pay required fees to any governmental agency having jurisdiction over the work. Inspections required by local ordinances during the course of construction shall be arranged as required. On completion of the work, satisfactory evidence shall be furnished Owner to show that all work has been installed in accordance with the ordinances and code requirements.
2. Approval: wherever the terms "approve" or "approved" are used in the specifications, they shall mean the approval of the Owner in writing.
3. Before any work is started, a conference shall be held between the Contractor and the Owner concerning the work under this Contract.
4. Coordination: coordinate and cooperate with other contractors to enable the work to proceed as rapidly and efficiently as possible.
5. Inspection of Site:
   a. Contractor shall acquaint himself with all site conditions. Should utilities not shown on the plans be found during excavations, Contractor shall promptly notify the Owner for instructions as to further action. Failure to do so will make Contractor liable for any and all damage thereto arising from his operations subsequent to discovery of such utilities not shown in plans.
   b. Contractor shall make necessary adjustments in the layout as may be required to connect to existing stubouts, should such stubs not be located exactly as shown and as may be required to work around existing work, at no increase in cost to the Owner.
6. Protection of Existing Plants and Site Conditions: the Contractor shall take necessary precautions to protect existing plants and site conditions to remain. Should damage be incurred, this Contractor shall repair the damage to its original condition at his own expense.
7. The Owner reserves the right to substitute, add or delete any material or work as the work progresses. Adjustment to the contract price shall be negotiated if deemed necesary by the Owner.
8. The Owner reserves the right to reject material or work which does not conform to the Contract Documents. Rejected work shall be removed or corrected at the earliest possible time.
9. Work Schedule: within ten (10) days after award of the Contract, the Contractor shall submit a work schedule to the Owner.
10. "As-Built" Irrigation Drawings: Contractor shall prepare an "As-Built" drawing on a blueline print which shall show deviations from the bid documents made during construction affecting the main line pipe, controller locations, remote control valves, quick-coupling valves and all sprinkler heads. The drawings shall also indicate and show approved substitutions of size, material and manufacturer's name plus catalog name and number. The drawings shall be delivered to the Owner before final acceptance of work.
11. The Contractor shall deliver the Controller Manual and key to the Owner and giveverbal and visual instruction for the operation of the controller. Each valve shall be operated for Owner's approval.
12. Final Acceptance: final acceptance of the work may be obtained from the Owner upon the satisfactory completion of all work.
13. Guarantee: all work shall be guaranteed for one year from date of acceptance against all defects in material, equipment and workmanship. Guarantee shall also cover repair of damage to any part of the premises resulting from leaks or other defects in material, equipment and workmanship to the satisfaction of the Owner. Repairs, if required, shall be done promptly and at no cost to the Owner.

C. MATERIALS:

1. General: all materials throughout the system shall be new and in perfect condition. After award of the Contract and prior to beginning work, the Contractor shall submit for approval four (4) copies of the complete list of materials which he proposes to install. Quantities of materials and equipment need not be included. No deviations from the specifications shall be allowed.
2. Plastic Piping:
   a. All main pressure lines two (2) inches and larger shall be PVC Class 315 type 1120-1220
   b. All pressure lines smaller than two (2) inches shall be PVC Schedule 40 type 1120-1220
   c. All non-pressure lines shall be PVC Class 200 type 1120-1220
   d. (For above ground irrigation systems, all non-pressure lines shall be UVR/PVC 1120 Schedule 40.)
3. Plastic Fittings: all plastic fittings shall be standard weight Schedule 40 and shall be Injection molded of an approved fitting compound. Threaded plastic fittings shall be injection molded. All tees and ells shall be sidegated. (For above ground irrigation systems, fittings shall be UVR/PVC Climi-fied.)
4. Solvent Cement: shall be compatible with PVC pipe and of proper consistency. (Brownline Bond-Tite Cement.)
5. Sprinkler Head Risers: Schedule 40, galvanized iron pipe or Schedule 80 PVC shall be used for risers. Pipe shall be cut in a standard pipe cutting tool with sharp cutters. Ream only to full diameter of pipe and clean all rough edges or burrs. Cut all threads accurately with sharp dies. Not more than three (3) full threads shall show beyond fittings when pipe is made up. Assemblies shall be as detailed. (UVR/PVC riser nipples.)
6. Low Gallonage Drip and Spray Jets: see details.
7. Automatic Controllers: see detail.
8. Remote Control Valves: see detail.
9. Sleeves for Pipes: all pipes and tubing under pavement shall be Schedule 40 or shall be placed in Schedule 40 or equivalent sleeving.
10. Control Wires: twenty-four (24) volt solid wire U.L. approved for direct burial in ground. Minimum wire size shall be fourteen (14) gauge U.F. coated. Common wire shall be white in color twelve (12) gauge U.F. coated.
11. Sleeves for Control Wires: under all pavement and where indicated on drawings PVC 1220-160 PSI plastic pipe or galvanized heavy-wall steel conduit shall be used.
12. Sprinkler Heads: see detail. All sprinkler heads shall be pop-up type. Six (6) inch pop-ups shall be used in turf and twelve (12) inch pop-ups in ground cover unless otherwise indicated. (For above ground irrigation system, see details for riser stabilizers and pipe stabilizers which shall be molded UVR/PVC material as manufactured by Brownline Pipe Company or equivalent.)
13. Service Saddles for lines over two (2) inches: shall be Smith-Blair double strap, all bronze or cast iron.
14. Quick Coupling Valves and Hose Bibs: shall be as noted on drawings.
15. Pressure Regulator to be placed downstream of all valves. PSI range to be determined by manufacturer's specification for sprinkler head operation.
16. Backflow Preventer: reduced pressure backflow preventer shall be used where valves exceed the elevation of the backflow preventer or where it is required by local governing agencies. In all other cases a pressure vacuum breaker may be utilized.

D. WORKMANSHIP

1. Lay out work as accurately as possible to the drawings. The drawings, though carefully drawn, are generally diagrammatic to location and to the extent that swing joints, offsets and all fittings are not shown. Parallel lines shall be placed in a common trench where practical.
2. The Contractor shall be responsible for 100% full and complete coverage of all irrigated areas and shall make any necessary minor adjustments at no additional cost to the Owner. Full and complete coverage is defined as the manufactured standard for spacing between sprinkler heads for 100% coverage.
3. Any major revisions to the irrigation system must be submitted and answered in written form along with any change in contract price.

E. INSTALLATION

1. Excavating and Trenching:
   a. All areas shall be rough graded prior to any irrigation trenching.
   b. Perform all excavations as required for the installation of the work included under this section including shoring of earth banks to prevent cave-ins. Restore all surfaces, existing underground installations, etc., damaged or cut as a result of the excavations to their original condition and in a manner approved by the Owner.
   c. Trenches shall be made wide enough to allow a minimum of six (6) inches between parallel pipe lines. Trenches for pipe lines shall be made of sufficient depths to provide the minimum cover from finish grade as follows:
      i. eighteen (18) inch minimum cover over main lines.
      ii. twelve (12) inch minimum cover over control wires from controller to valves.
      iii. twelve (12) inch minimum cover over lateral lines to heads.
   d. Maintain all warning signs, shoring, barricades, flares and red lanterns as required by the Safety Orders of the Division of Industrial Safety and any local ordinances.
2. Pipe Line Assembly:
   a. Install remote control valves where shown and group together where practical. Place no closer than twelve (12) inches to walk edges, buildings and walls.
   b. Plastic pipe and fittings shall be solvent welded using solvents and methods as recommended by the manufacturer of the pipe except where screwed connections are required. Pipe and fittings shall be thoroughly cleaned of dirt, dust and moisture before applying solvent with a non-synthetic bristle brush.
   c. Excess solvent cement shall be wiped off to avoid weakening pipe.
   d. Pipe may be assembled and welded on the surface. Snake pipe from side to side of trench bottom to allow for expansion and contraction.
   e. Make all connections between plastic pipe and metal valves or steel pipe with threaded fittings using plastic male adapters.
   f. (For above ground pipe line assemblies, install as per installation instructions by Brownline Pipe Manufacturing Company/or equivalent. Paint all non-UVR/PVC parts not normally exposed to protect from sun's rays.)
3. Sprinkler Heads:
   a. Install all sprinklers as detailed on drawings.
   b. Install all sprinklers on flexible risers.
4. Quick Couplers or Hose Bibs:
   a. All quick coupler valves shall be installed on PVC Swing Joints.
   b. All quick coupler valves shall be placed at one hundred (100) feet intervals unless otherwise specified on drawings.
   c. Hose bibs shall be placed at fifty (50) feet intervals unless otherwise specified on drawings.
5. Thrust Blocks: Contractors shall install concrete thrust blocks at all changes of direction and terminal points of pressured pipe three (3) inches in diameter and larger.
6. Closing of Pipe and Flushing Lines:
   a. Cap or plug all openings as soon as lines have been installed to prevent the entrance of materials that would obstruct the pipe. Leave in place until removal is necessary for completion of installation.
   b. Thoroughly flush out all water lines before installing heads, valves and other hydrants.
   c. Test in accordance with paragraph on Hydrostatic Tests.
   d. Upon completion of the testing, the Contractor shall complete assembly and adjust sprinkler heads for proper distribution.
7. Hydrostatic Tests:
   a. Request the presence of the Owner in writing at least forty-eight (48) hours in advance of testing.
   b. Testing is to be accomplished at the expense of the Contractor and in the presence of the Owner.
   c. Center load piping with a small amount of backfill to prevent arching or slipping under pressure.
   d. Apply a continuous and static water pressure of sixty (60) PSI, after welded plastic joints have cured at least twenty-four (24) hours and with the risers capped, as follows:
      i. Main lines and submains to be tested for twelve (12) hours.
      ii. Lateral lines to be tested for two (2) hours.
8. Coverage Test: when the sprinkler system is completed, Contractor shall perform a coverage test in the presence of the Owner and determine if water coverage for planting areas is complete and adequate. See Section D-2 for coverage.
9. Automatic Controllers: connect remote control valves to controller in a clockwise sequence to correspond with station setting beginning with Stations 1, 2, 3, etc.
10. Automatic Control Wiring:
    a. Install control wires, sprinkler mains and laterals in common trenches wherever possible.
    b. Install control wires at least eighteen (18) inches below finish grade and lay to the side and below main line. Provide looped slack at valves and snake wires in trench to allow for contraction of wires. Tie wires in bundles at ten (10) feet intervals.
    c. Control wire splices will be allowed only on runs more than five hundred (500) feet with no splices except at junction boxes. All wiring connections must utilize waterproof 3M Scotch Lok #3576 Connectors or equal.
    d. All wire passing under existing or future paving, construction, etc., shall be encased in plastic or galvanized steel conduit extending at least twelve (12) inches beyond edges of paving or construction.
11. Backfill and Compacting:
    a. After system is operating and required tests and inspections have been made, fill excavations and trenches with clean backfill free of rubbish.
    b. Backfill for all trenches, regardless of the type of pipe covered, shall be compacted to a minimum 90% density.
    c. Compact trenches in areas to be planted by thoroughly flooding the backfill. Jetting process may be used in those areas.
    d. Dress off all areas to finish grades.

F. CLEAN-UP: remove all debris from the site resulting from work in this section.

G. LOW GALLONAGE IRRIGATION:

1. Installation of valves, filters and pressure regulators shall be as detailed.
2. Watering Method - Drip Irrigation:
   a. Shrubs - one (1) one-gallon emitter per plant, place on root ball.
   b. Trees - four (4) one-gallon emitters per tree. Place one on root ball, three on triangular spacing at outer line of foliage.
   c. Flower Beds, Groundcover, Small Planted Areas - one (1) one-gallon emitter on triangular spacing with a maximum distance separation of four (4) feet on center.
   d. Baskets, Hanging Pots, Potted Plants - one (1) 1/2-gallon emitter per container.
3. Distribution Tubing (Lateral Lines) - Drip Irrigation
   a. Maximum number of emitters:
      i. 3/8 inch tubing - 80 one-gallon per hour emitters
      ii. 1/2 inch tubing - 240 one-gallon per hour emitters
      iii. 3/4 inch tubing - 480 one-gallon per hour emitters
   b. Tubing with emitter:
      i. 1/8 inch tubing - install emitters on the lateral line or at the end of the tubing.
      ii. 1/4 inch tubing - install emitters on the lateral line.
4. Low gallonage spray jets:
   a. Maximum number of jets:
      i. 1/2 inch tubing - 30 eleven and one half- gallon per hour jets
      ii. 3/4 inch tubing - 50 eleven and one half - gallon per hour jets
5. End Clip: at the end of each distribution tubing (lateral line), provide a cap or clamp that will allow flushing or draining and which will provide the potential to attach additional lengths of tubing.
6. Recommended Watering Periods:
   a. Very hot and windy - thirty (30) minutes per day
   b. Hot and windy - fifteen (15) minutes per day
   c. Warm - ten (10) minutes per day
   d. Cool - five (5) minutes per day
7. General: all trees, shrubs and groundcover areas not irrigated by sprinkler heads shall be irrigated by drip system unless otherwise specified.

H. PUMPING STATION/BOOSTER PUMP: control station and pump as per plan. Control pump specifications file shall be in owner's possession. See details.

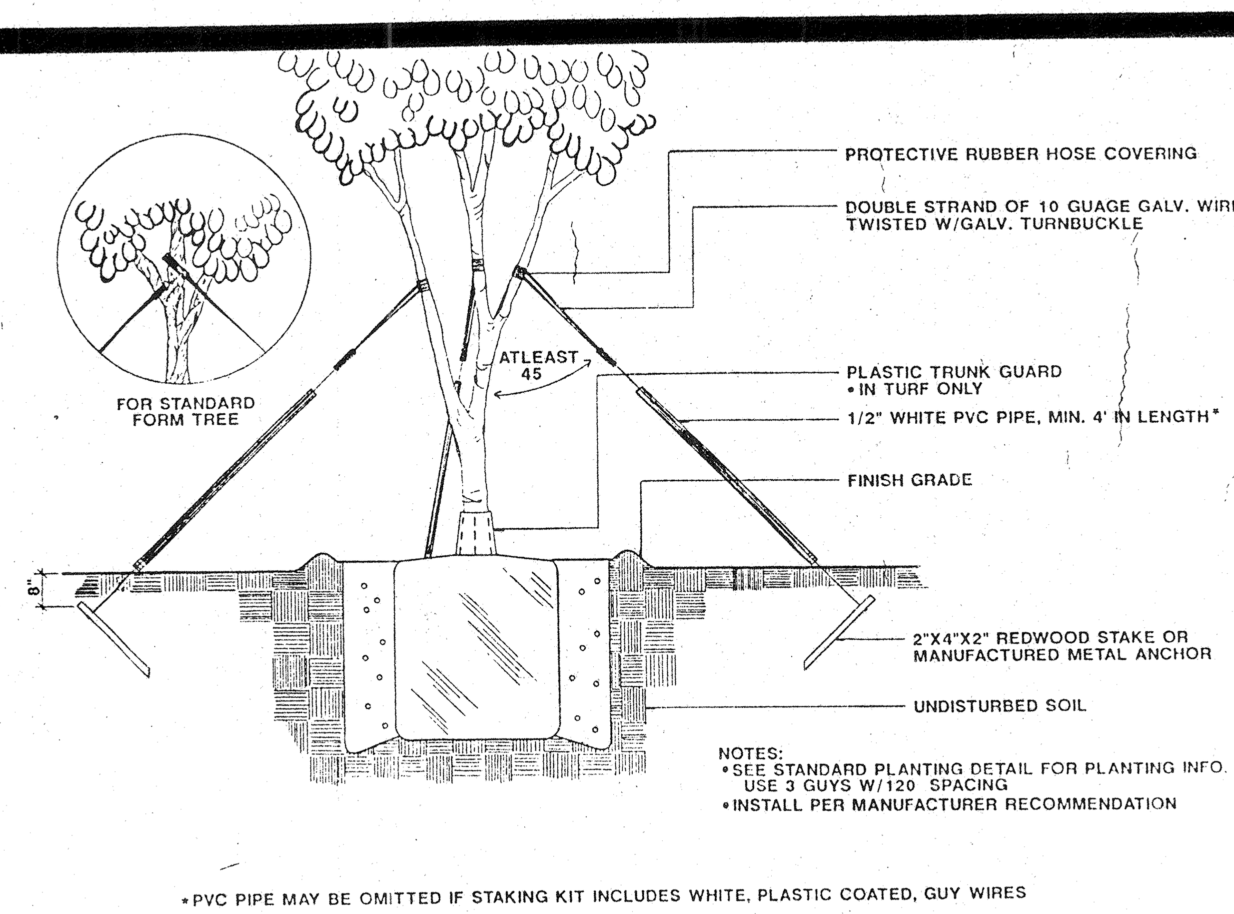

Boxed Tree

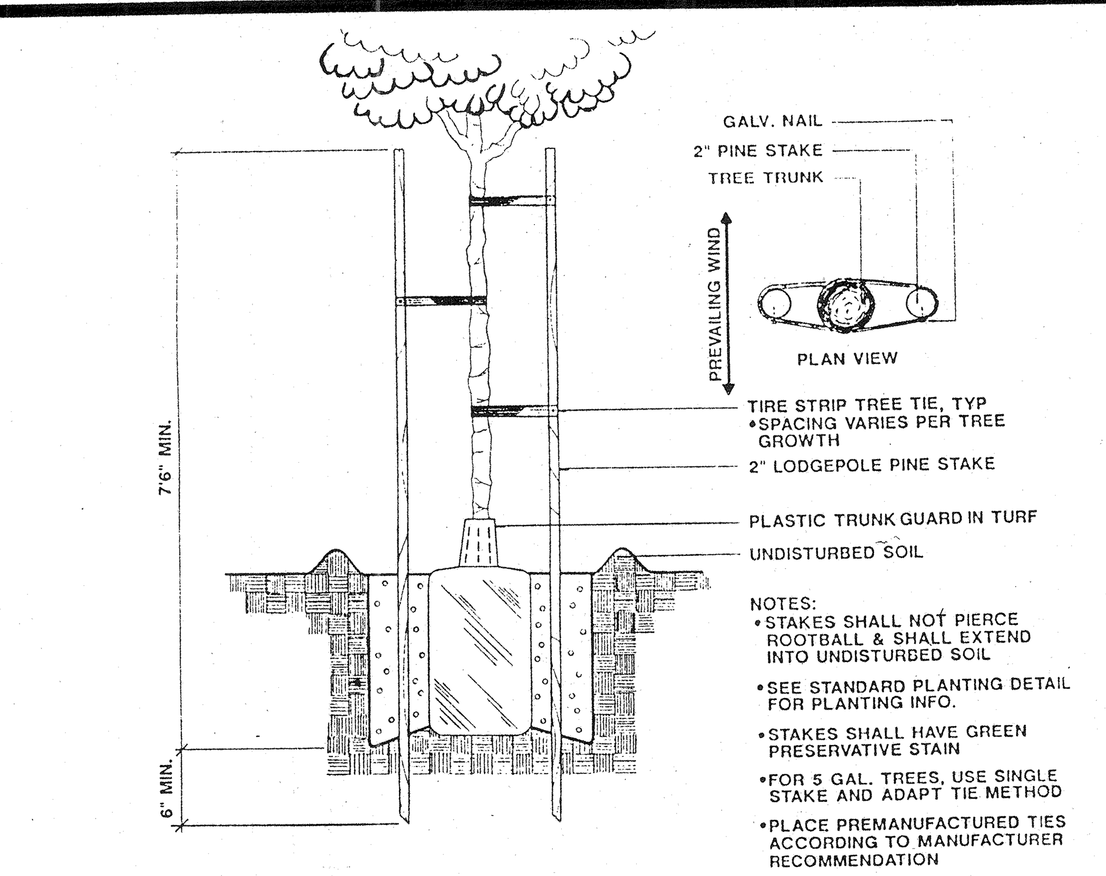

15 Gallon Tree

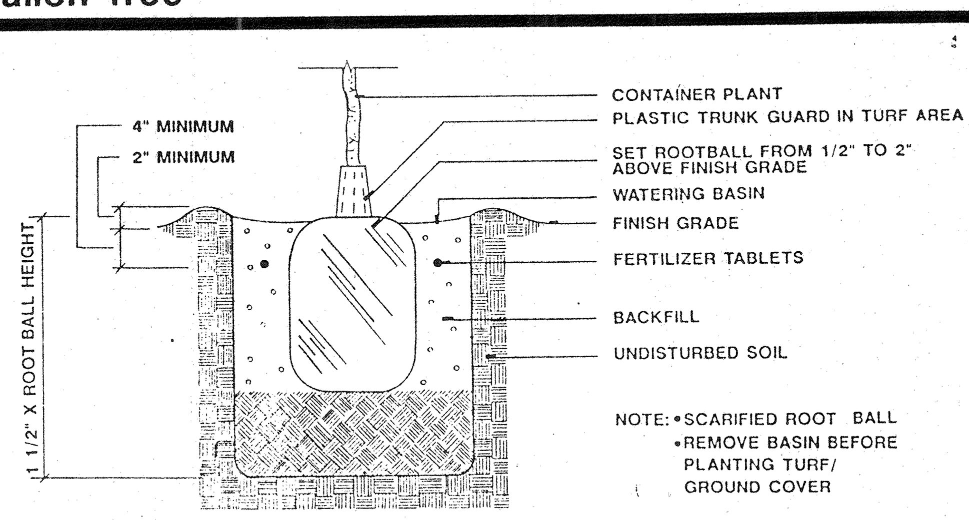

Standard Planting

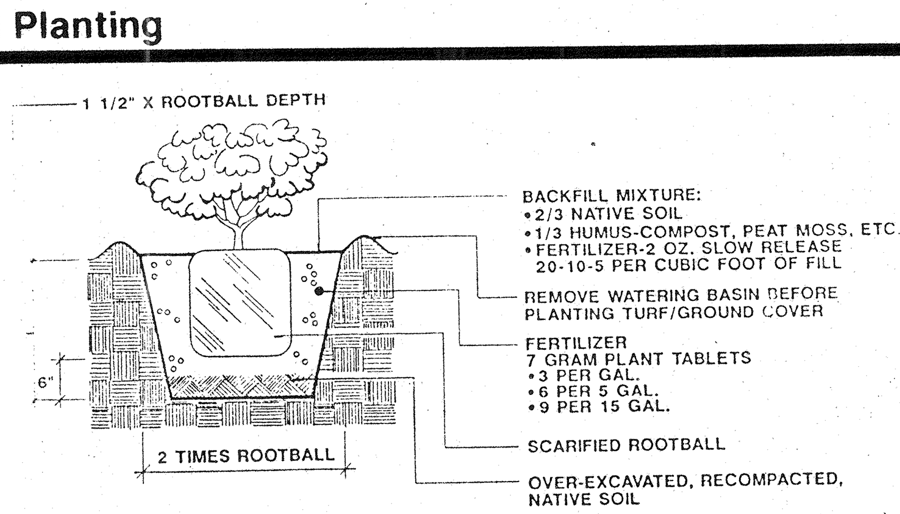

Shrub

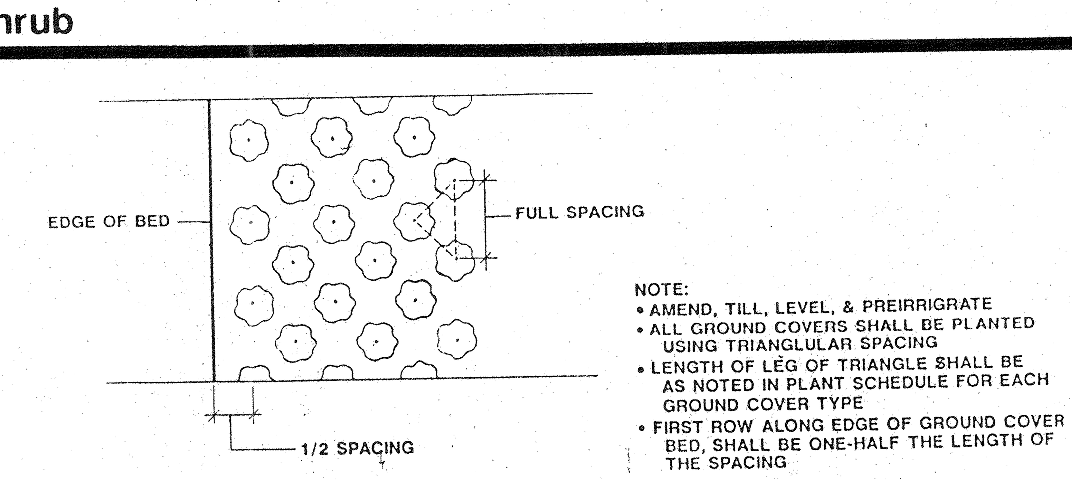

Groundcover

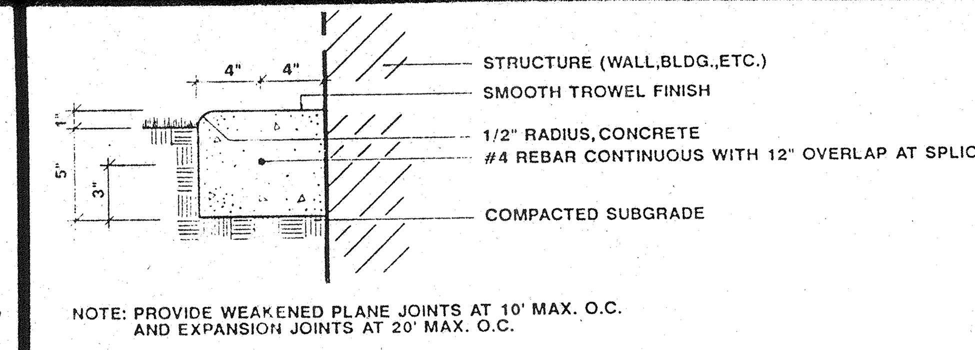

Concrete Edging

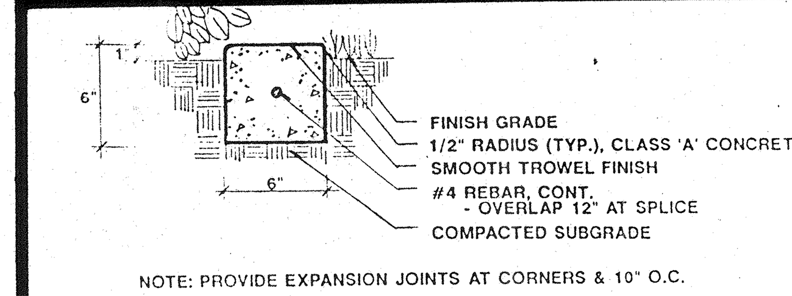

Concrete Header

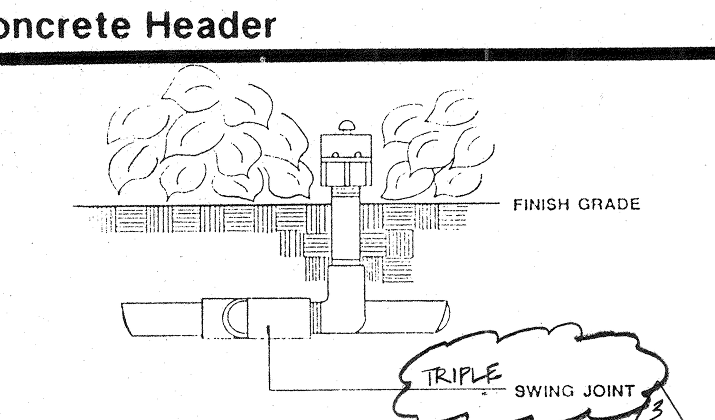

I-1 Flood Bubbler

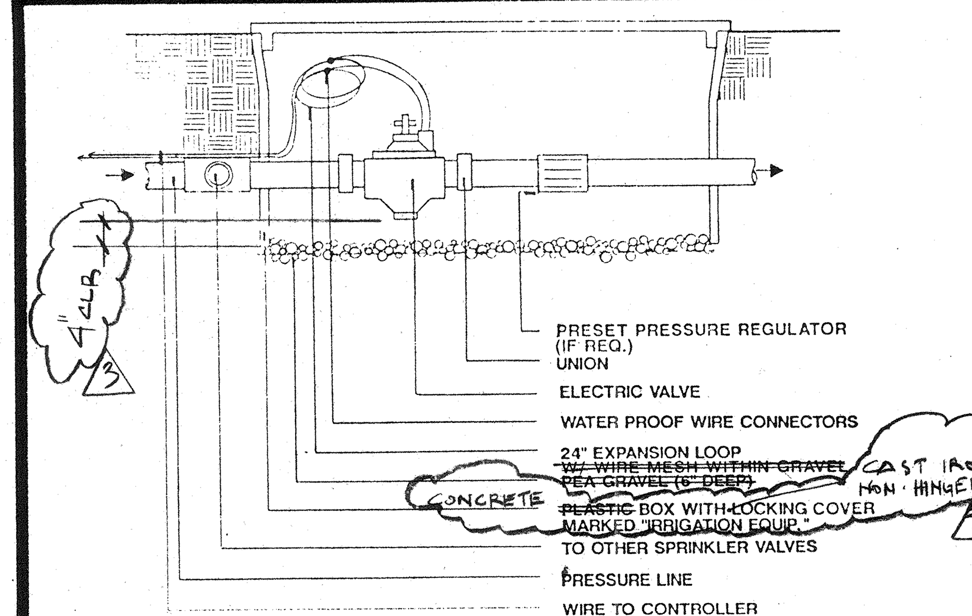

I-2 Automatic Valve

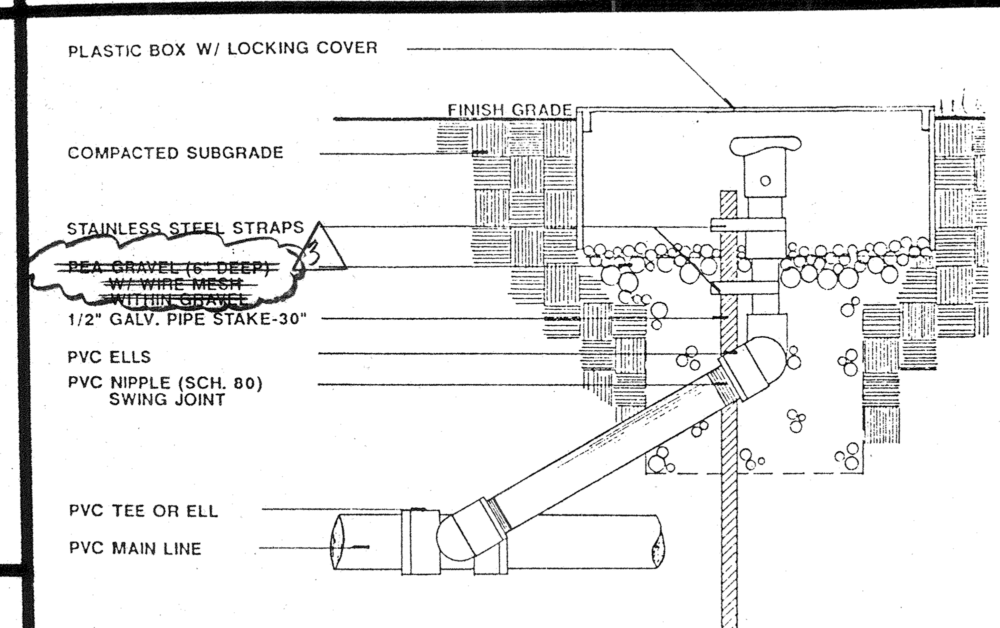

I-3 Quick Coupler

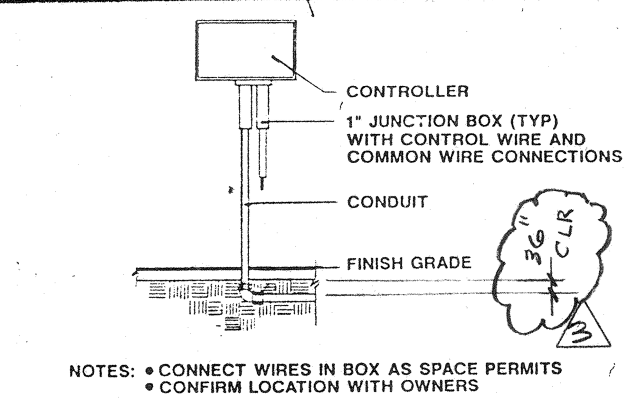

I-4 Controller

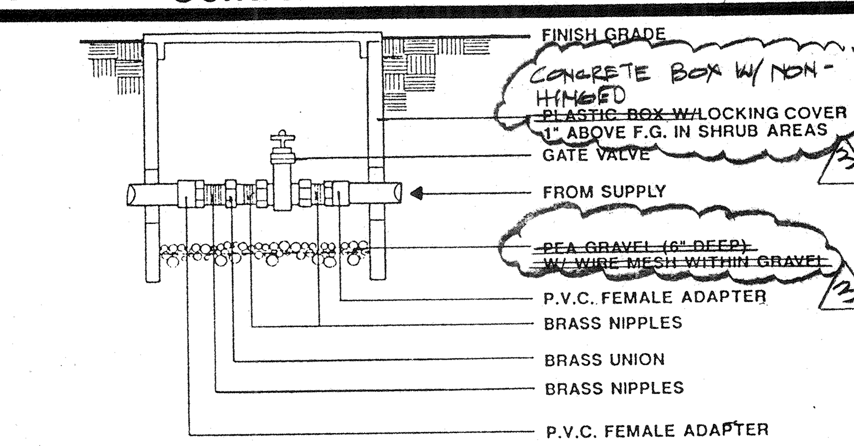

I-5 Manual Gate Valve

GENERAL NOTES

All construction and workmanship shall conform to the Uniform Building Code and to City/County codes. Contractor is responsible for obtaining permits and inspections as required by governing code authority and shall carry worker's compensation, public liability, and property damage insurance as required by Owner.

The Contractor is solely responsible for all construction methods and for safety conditions at the work site.

The Landscape Architect firm is not liable for construction methods.

For clarification of design concept details, shop drawings shall be submitted by Contractor, if required by Owner or governing authority.

The drawings and specifications represent the finished construction product. These documents, although prepared with care and diligence, may represent imperfect information and may contain code violations, errors, omissions, contradictions and improper uses of materials. The Contractor shall review these documents thoroughly and shall notify the Landscape Architect or owner immediately upon any such discovery.

All scale dimensions are approximate. The Contractor shall check and verify all site dimensions prior to proceeding with work and clarify with Owner or Landscape Architect if necessary.

All bracing, temporary supports, shoring, etc., are the sole responsibility of the Contractor. Observation visits to the job site by the Landscape Architect/Owner do not include inspection of construction procedures. The visits shall not be construed as continuous and detailed inspections.

All existing plants and materials in conflict with this plan shall be removed. Disposition of salvageable materials is at the discretion of the Owner.

Design, material, equipment and products other than those described or indicated on drawings may be considered for use, provided prior approval is obtained from the Owner and the applicable code authority.

Materials, finishes, and colors shall be confirmed by samples with Owner prior to purchase.

During work and through its completion, the Contractor shall keep the site clean to the satisfaction of the Owner.

All constructed or manufactured items placed shall be checked in an on-going program to detect unsafe or deteriorated conditions for replacement or correction by the owner.

Owner shall provide sufficient lighting to all areas and construct and maintain all structures in a manner to create a safe environment.

PLANTING NOTES

Control measures for bermuda grass, nut grass and other weeds shall be applied prior to planting according to manufacturer's specifications and/or Owner's requirements.

Soil in ground cover, turf and hydroseeded areas shall be amended with three (3) cubic yards of humus material (RNR redwood, cedar sawdust or equal) and thirty (30) pounds of 8-8-4 commercial fertilizer per one thousand (1,000) square feet. Amendments shall be evenly spread and tilled to a depth of four (4) inches. If a soil sample test is required, amendments shall be applied as per recommendation of the report and shall supersede the above.

Soil shall be added and compacted to grade where pavement, bases, roots, etc., are removed. Finish grade shall be three-quarters (3/4) inches below all sidewalks, patios and curbs unless otherwise specified.

Final grade shall be done to assure proper drainage. Catch basins shall be installed as necessary in enclosed areas and low spots to insure that there will be no standing water.

Prior to planting, all planting areas shall be irrigated with at least two (2) inches of water for assurance of moist planting soil. Low areas shall be filled with amended soil and irrigated to settle.

All plant material shall be in accordance with American Standard of Nursery Stock. Planting shall be done per specifications and shall be irrigated thoroughly immediately after planting.

After completion of planting, all trees shall be guaranteed to live in a healthy condition for a one year period, and all other plant material shall be guaranteed for a sixty day period.

All plant material shall be checked and maintained (periodically pruned) and cushioning materials shall be replaced as required by the owner in an ongoing program to assure a safe environment.

All tree pruning work shall be preformed by a certified tree arborist.

IMPORTANT NOTICE ... you dig

MARCH 1,1994

NORTH

REGISTERED LANDSCAPE ARCHITECT
A. James Montgomery 1003
Signature
Date
STATE OF CALIFORNIA

All Rights Reserved - A. James Montgomery, Landscape Architect
© Copyright 1991
Design, plans and specifications in this drawing shall not be used or reproduced in whole or in part for any other project.

Revisions:
3 12-15-93

A. James Montgomery & Assoc., Inc.
LANDSCAPE ARCHITECTURE
4515 CENTRAL AVE, STE 204 RIVERSIDE, CA 92506 (714)788-6144

BOATHOUSE for FAIRMOUNT PARK

CITY OF RIVERSIDE
PARKS & RECREATION DEPARTMENT

Planting & Irrigation
Details/Specifications

drn. by: JFM
date: 1 92
scale: NTS
page: 26
L-2
of 27

PN - 9141

PLAN NO. P-0113

Irrigation Schedule

SYM	MANUFACTURER	MODEL	DESCRIPTION	NOZ	GPM	RAD	PSI	PAT	DET
	TORO ~~OR EQUAL~~	500 SERIES	FLOOD BUBBLER	514-20	2.0	FLOOD	20	FLOOD	1
			3" POP-UP BUBBLER						
	TORO	XP 300 SERIES	TURF POP-STREAM ROTOR	07	1.49/2.25	36'	35	1/4, 1/2	
	TORO	640 SERIES	TURF POP	42	12	52'	40	1/4, 1/2, F	

3

SYM	DESCRIPTION	MANUFACTURER	MODEL	DET
POC	POINT OF CONNECTION TO EXISTING IRRIGATION MAINLINE		—	—
	AUTOMATIC VALVE	RAINBIRD ~~HARDIE~~ 3 OR EQUAL	700 - 1" & 1½"	2
		STATION # SIZE TYP		
	MANUAL GATE VALVE	NIBCO	T113, 1½"	5
	QUICK COUPLER	RAIN BIRD	44LRC 3/4"	3
	ELECTRIC CONTROL VALVE W/ MANUAL SHUTOFF DEVICE (SEE DETAIL)	~~HARDIE~~ 3 RAINBIRD	12 STATION RAINBIRD CHECK	4

Piping Schedule

SYM	DESCRIPTION	RATING
	1½" PRESSURE LINE USE 3/4" TO CONNECT QC VALVE TO IRRIGATION MAIN-LINE	SCHEDULE 40
3/4"	3/4" NON-PRESSURE LATERAL LINE	CLASS 200
1"	1"	
1¼"	1¼"	
1½"	1½"	
	EX LATERAL LINE & HEAD. 3	

NOTES:

MAXIMUM DEMAND SHALL BE 36.0 GPM AT 20 PSI HEAD PRESSURE W/ 60 PSI AT SOURCE.

ALL PIPES UNDER PAVED AREAS SHALL BE SCHEDULE 40 AND IN SCHEDULE 40 SLEEVING.

THIS SYSTEM IS DIAGRAMMATIC. ALL PIPES, VALVES, ETC., SHOWN WITHIN PAVED AREAS ARE FOR DESIGN CLARIFICATION ONLY AND SHALL BE INSTALLED IN PLANTING AREAS W/HEADS (& PIPES) ONLY IN TURF.

ANY DEVIATION FROM THE DESIGNED IRRIGATION SYSTEM OR ANY MATERIALS SUBSTITUTION WILL VOID SYSTEM INTEGRITY OF LANDSCAPE ARCHITECT'S DESIGN.

ANY MATERIALS SUBSTITUTION SHALL BE OF EQUAL QUALITY & TYPE. & SUBJECT TO CITY REVIEW & APPROVAL. APPROPRIATE SPRAY PATTERNS SHALL BE USED IN ALL LOCATIONS.

LOCATE VALVES & CONTROLLERS PER OWNER.

USE CHECK VALVE WHERE HEADS VARY MORE THAN 3' IN ELEVATION ON A VALVE.

THIS IRRIGATION DESIGN IS BASED ON ZONING IRRIGATION PRINCIPLES FOR PLANT MATERIAL AND SUN EXPOSURE. AUTOMATIC CONTROLLER TO BE ADJUSTED PER ZONE WATERING REQUIREMENTS.

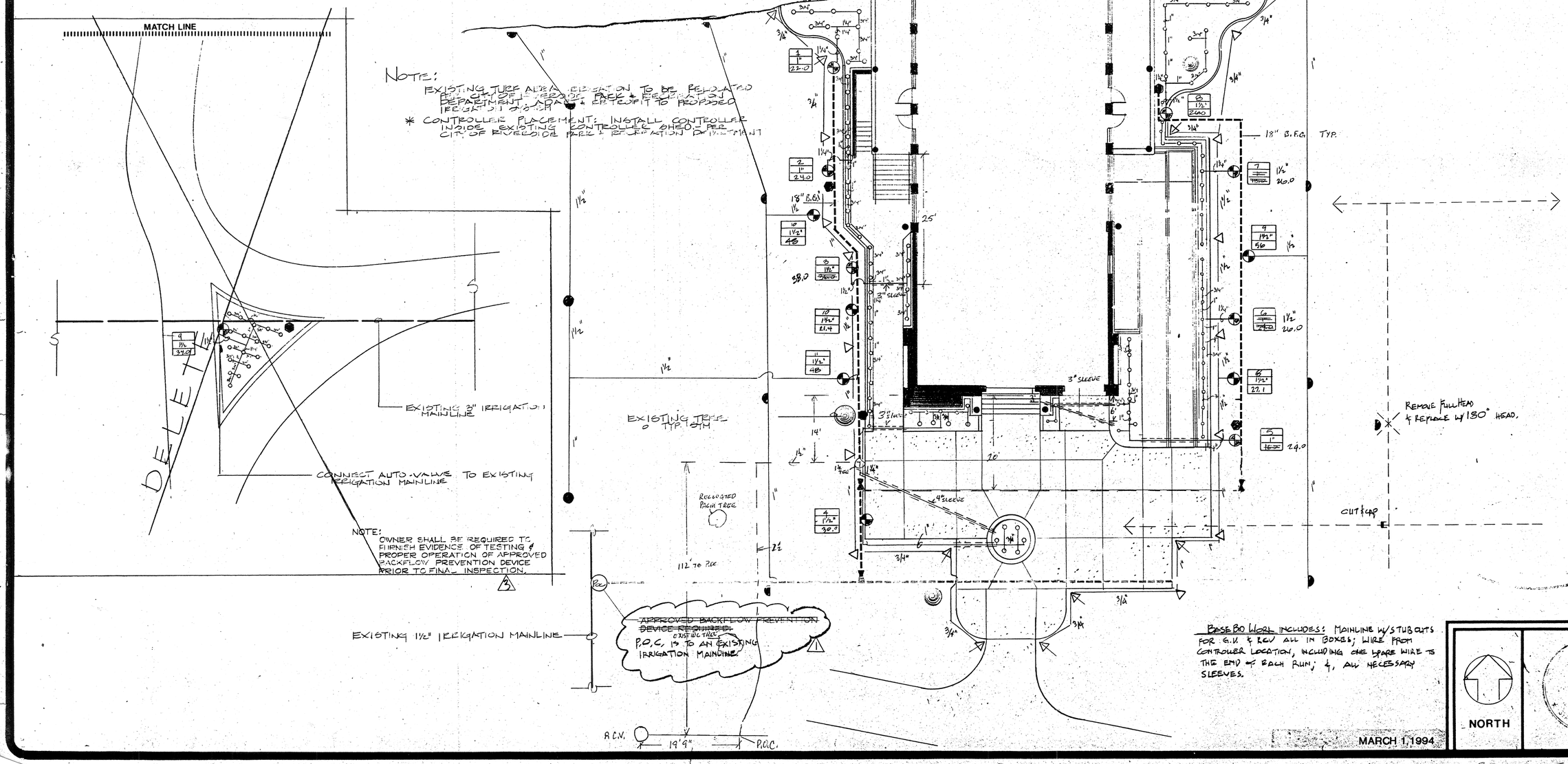

BLUELINE AS BUILT FORWARDED TO FACILITIES MAIN TOMARRO 9/27/95

PLAN NO. P-0113

© Copyright 1991 All Rights Reserved - A. James Montgomery, Landscape Architect
Design, plans and specifications contained in this document shall not be used or reproduced in whole or in part without the written permission of the Landscape Architect.

Revisions:
1. 5-27-93
2. 12-15-93

A. James Montgomery & Assoc., Inc.
LANDSCAPE ARCHITECTURE
4919 CENTRAL AVE, STE 204 RIVERSIDE, CA 92506 (714)788-0144

BOATHOUSE for FAIRMOUNT PARK
CITY OF RIVERSIDE
PARKS & RECREATION DEPARTMENT

Irrigation Plan

drn. by: JRM
date: 10-93
scale: 1"=10'
page 27
I-1
of 27
PN-9141

FIRE SPRINKLER PLANS

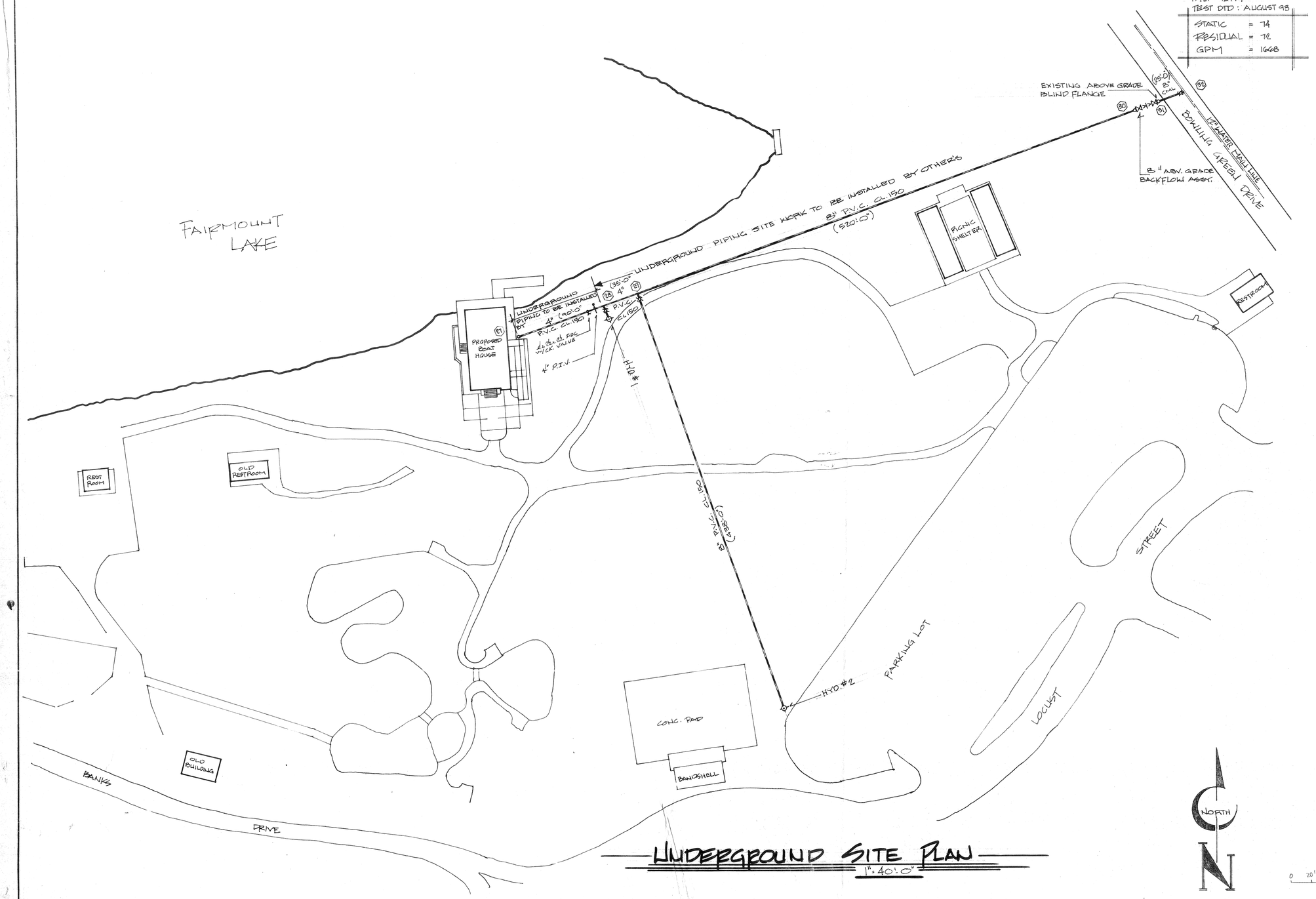

UNDERGROUND SITE PLAN

1" = 40'-0"

UNDERGROUND GENERAL NOTES

1. ALL UNDERGROUND PIPE TO BE P.V.C. CL.150, U.L. LISTED FOR USE IN FIRE SPRINKLER SYSTEMS.
2. ALL UNDERGROUND PIPE TO BE DUCTILE IRON FROM BASE OF RISER TO 5'-0" OUTSIDE OF BLDG., & U.L. LISTED.
3. ALL UNDERGROUND FITTINGS TO BE "MECHANICAL JOINT" DUCTILE IRON OR CAST IRON, U.L. LISTED.
4. ALL THRUST BLOCKING TO BE IN ACCORDANCE WITH N.F.P.A. NO. 24 & LOCAL STANDARDS.
5. ALL UNDERGROUND PIPING TO MAINTAIN A 5'-0" MINIMUM BURY.
6. ALL UNDERGROUND FIRE MAINS SHALL BE HYDROSTATICALLY TESTED AT 200 P.S.I. FOR 2 HOURS MINIMUM.
7. ALL UNDERGROUND PIPING SHALL BE FLUSHED PER N.F.P.A. NO. 24, BEFORE CONNECTION TO THE OVERHEAD FIRE SPRINKLER SYSTEM PIPING.

NOTE:
IT IS THE RESPONSIBILITY OF THE PROJECT SUPERINTENDENT TO PROVIDE EXACT LOCATIONS OF PLANTER CURB, BUILDING LINES AND FINISH GRADES, BEFORE UNDERPIPING IS INSTALLED AND ABOVE GRADE FLANGE ELEVATIONS ARE SET.

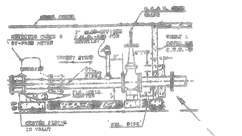

*** NOTE **** CONTRACTOR SHALL ISOLATE PIPING AT THIS POINT DURING HYDROSTATIC TESTING BY FIRE DEPT.

CITY OF RIVERSIDE FIRE DEPT.

This is to certify that these plans have been approved by the fire official and no change or deviation therefrom shall be permitted. However, this approval does not authorize violation or cancellation of any law of the city nor does it prevent requiring correction of any error on the plans. This is not an approval of any work requiring a separate permit under the laws of the city.

Engineer: [illegible] Date: 6/10/94

COLOR CODE FOR MAINS		
A — RED	H — RED-BLUE	Q — WHITE-ORANGE
B — WHITE	J — RED-YELLOW	R — BLUE-YELLOW
C — BLUE	K — RED-GREEN	S — BLUE-GREEN
D — YELLOW	L — RED-ORANGE	T — BLUE-ORANGE
E — GREEN	M — WHITE-BLUE	V — YELLOW-GREEN
F — ORANGE	N — WHITE-YELLOW	W — YELLOW-ORANGE
G — RED-WHITE	P — WHITE-GREEN	X — GREEN-ORANGE

HANGER LEGEND
#1. — HOOK
#2. — EYE ROD & RING
#3. — ANGLE CLIP, ROD & RING
#4. — COACH SCREW ROD & RING
#5. — C-CLAMP, ROD & RING
#6. — THD U-BOLT & 2 C-CLAMPS
#7. — EXPANSION SHELL, ROD & RING
#8. — POWDER STUD, ROD & RING
#9. — WRAP-AROUND HOOKS

SYMBOLS:
★ = BOTTOM OF PURLIN OR SLAB TO ℄ OF PIPE
★★ = BOTTOM OF BEAM TO ℄ OF PIPE

THESE SHOP DRAWINGS WERE PREPARED FROM PLANS DATED 9-28-93 CORNELL FIRE PROT. IS NOT RESPONSIBLE FOR SUBSEQUENT REVISIONS OR OTHER INFORMATION UNLESS FURNISHED.

STANDARD SYMBOLS
— POST INDICATOR VALVE
— KEY VALVE
— FIRE HYDRANT
— FIRE DEPT. CONNECTION
— O. S & Y GATE VALVE
— SWING CHECK VALVE
— NEW UNDERGROUND
— EXIST UNDERGROUND

SPRINKLER HEAD SYMBOLS
— UPRIGHT ON 1½" OUTLET
— PENDENT ON 1" OUTLET
— PENDENT ON 1½" OUTLET
— UPRIGHT ON ¾" OUTLET
— PENDENT ON ¾" OUTLET
— FLUSH ON 1" OUTLET
— UPRIGHT ON 1" OUTLET (STUB UP)
— SIDEWALL ON 1½" OUTLET
— DRY PENDENT ON 1" OUTLET

ALARM: FLOW SWITCH & ELEC. BELL

SPRINKLERS	FINISH	TYPE	DEGREE	QTY
TOTAL SPRINKLERS THIS DRAWING OR JOB:				Ø

REV.	DATE	BY	REVISION

APPROVALS: AND PHONE NO.	SUB.	RET.
1. RIVERSIDE BLDG. DEPT.		
2. RIVERSIDE FIRE DEPT.		
3.		
4.		

WATER DEPT. AND PHONE NO.

CONTRACT WITH: 909-948-8868
B.S.H. CONSTRUCTION
10392 HILLSIDE RD.
ALTA LOMA, CA. 91701

JOB SUPT.: EDUARDO HARGRAVE

HAZ RD: GRD. GP. 1 - .161 1500

C-16 STATE LICENSE NO. 685600 GS

TITLE: UNDERGROUND SITE PLAN

BOAT HOUSE @ FAIRMONT PARK
2707 LOCUST ST.
RIVERSIDE, CA.

CORNELL FIRE SPRINKLER CO.
110 E. LA CADENA DRIVE
RIVERSIDE, CA. 92501
909-788-3119

DRAWER NO.	94
DRAWN BY	VEPN
DATE	5-25-94
SCALE	1" = 40'
JOB NO.	94-1022
SHEET NO.	1 OF 3

FIRE SPRINKLER PLANS

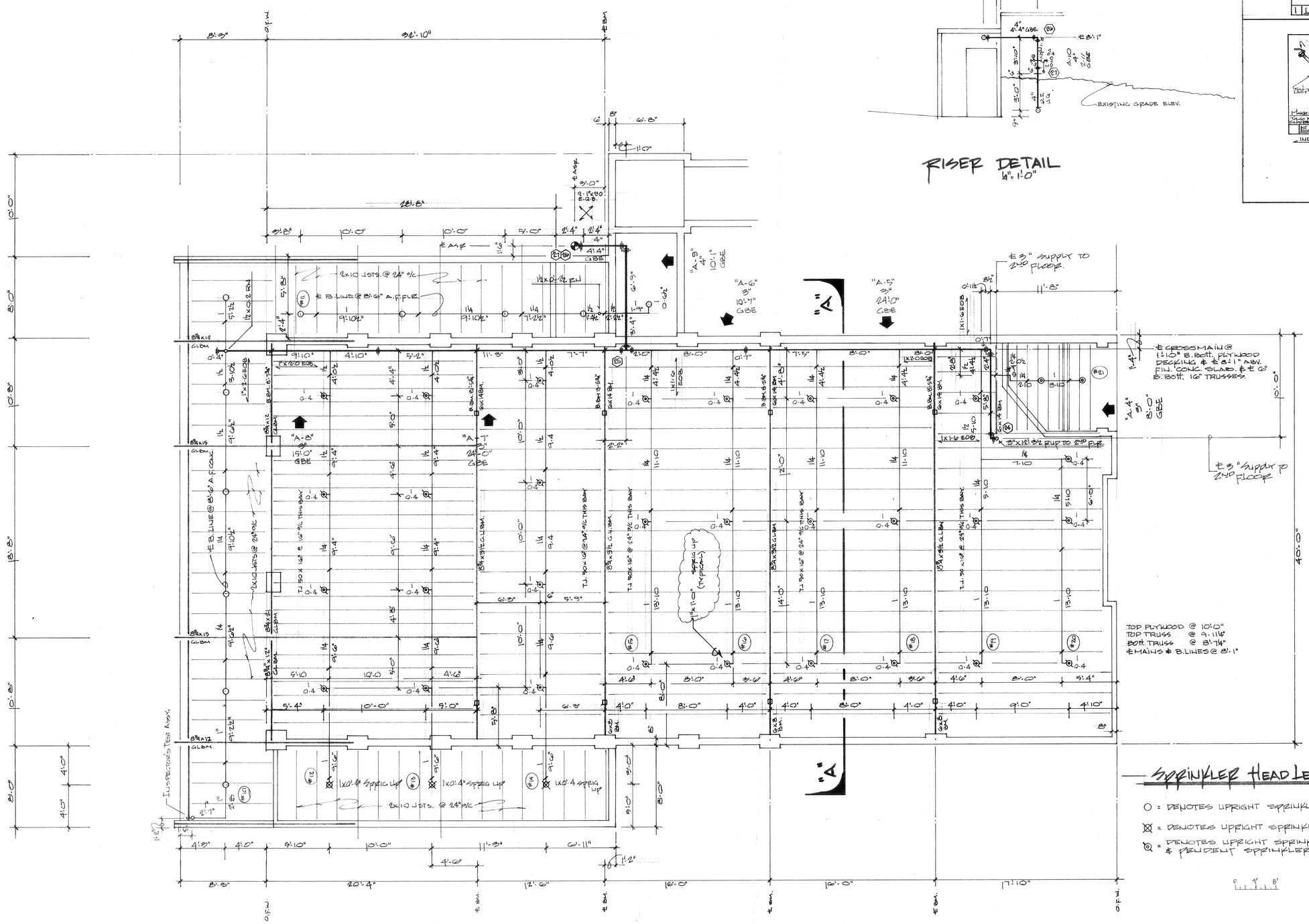

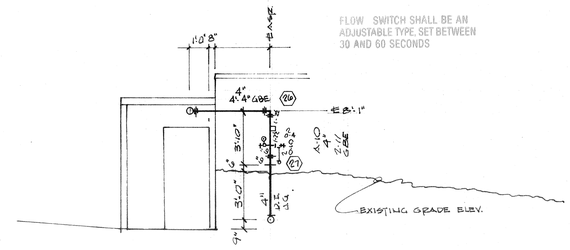

RISER DETAIL
1/4" = 1'-0"

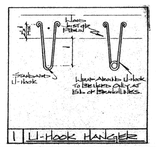

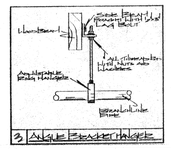

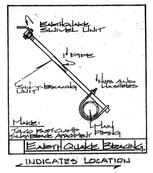

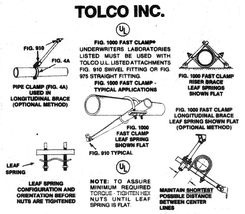

OVERHEAD GENERAL NOTES

1. ALL MATERIALS AND INSTALLATION TO CONFORM TO N.F.P.A. NO. 13 & LOCAL CODES.
2. ALL EARTHQUAKE BRACING TO BE IN ACCORDANCE WITH N.F.P.A. NO. 13.
3. ALL CROSSMAINS TO BE (ALLIED SUPER FLO) & WELDED BY CERTIFIED WELDERS AND USING UL APPROVED WELDING OUTLETS.
4. ALL BRANCH LINES TO BE ALLIED SUPER-40, THREADED, WITH 125# BLACK FITTINGS.
5. THIS OVERHEAD SYSTEM IS TO BE HYDROSTATICALLY TESTED AT 200 P.S.I. FOR 2 HOURS OR AT 50 P.S.I. IN EXCESS OF THE MAXIMUM STATIC PRESSURE WHEN THE MAXIMUM STATIC PRESSURE IS IN EXCESS OF 150 P.S.I.
6. THIS SYSTEM HAS BEEN CALCULATED TO DELIVER .16 GPM PER SQUARE FOOT, TO THE MOST REMOTE 1500 SQUARE FOOT AREA.

SPRINKLER HEAD LEGEND

○ = DENOTES UPRIGHT SPRINKLER HEAD

⊗ = DENOTES UPRIGHT SPRINKLER HEAD ON SPRIG UP

◎ = DENOTES UPRIGHT SPRINKLER HEAD ON SPRIG UP & PENDENT SPRINKLER HEAD

0 4' 8'

CITY OF RIVERSIDE FIRE DEPT.

This is to certify that these plans have been approved by the fire official and no change or deviation therefrom shall be permitted. However, this approval does not authorize violation or cancellation of any law of the city nor does it prevent requiring correction of any error on the plans. This is not an approval of any work requiring a separate permit under the laws of the city.

Engineer [signature] Date 6/10/94

COLOR CODE FOR MAINS	HANGER LEGEND	SYMBOLS	STANDARD SYMBOLS	SPRINKLER HEAD SYMBOLS
A — RED B — WHITE C — BLUE D — YELLOW E — GREEN F — ORANGE G — RED-WHITE H — RED-BLUE J — RED-YELLOW K — RED-GREEN L — RED-ORANGE M — WHITE-BLUE N — WHITE-YELLOW P — WHITE-GREEN Q — WHITE-ORANGE R — BLUE-YELLOW S — BLUE-GREEN T — BLUE-ORANGE V — YELLOW-GREEN W — YELLOW-ORANGE X — GREEN-ORANGE	#1. — HOOK #2. — EYE ROD & RING #3. — ANGLE CLIP, ROD & RING #4. — COACH SCREW ROD & RING #5. — C-CLAMP, ROD & RING #6. — THD U-BOLT & 2 C-CLAMPS #7. — EXPANSION SHELL, ROD & RING #8. — POWDER STUD, ROD & RING #9. — WRAP-AROUND HOOKS	* = BOTTOM OF PURLIN OR SLAB TO ℄ OF PIPE ** = BOTTOM OF BEAM TO ℄ OF PIPE THESE SHOP DRAWINGS WERE PREPARED FROM PLANS DATED 2-25-94 BY THE FIRE PROT. IS NOT RESPONSIBLE FOR SUBSEQUENT REVISIONS OR OTHER INFORMATION UNLESS FURNISHED.	F.P.I. — POST INDICATOR VALVE — KEY VALVE — FIRE HYDRANT — FIRE DEPT. CONNECTION — O. S & Y GATE VALVE — SWING CHECK VALVE — NEW UNDERGROUND — EXIST UNDERGROUND	— UPRIGHT ON ½" OUTLET — PENDENT ON 1" OUTLET — PENDENT ON ½ OUTLET — UPRIGHT ON ¾" OUTLET — PENDENT ON ¾" OUTLET — FLUSH ON 1" OUTLET — UPRIGHT ON 1" OUTLET (STUB UP) — SIDEWALL ON ½" OUTLET — DRY PENDENT ON 1" OUTLET

ALARM: FLOW SWITCH & ELEC. BELL

SPRINKLERS	FINISH	TYPE	DEGREE	QTY
½" VIKING MODEL	BR	5G1	155	44
½" " "	BRZ	5RP	165	82
TOTAL SPRINKLERS THIS DRAWING OR JOB				126

REV.	DATE	BY	REVISION

APPROVALS: AND PHONE NO.	SUB.	RET.
1 RIVERSIDE BLDG. DEPT.		
2 RIVERSIDE FIRE DEPT.		
3		
4		
WATER DEPT. AND PHONE NO.		

CONTRACT WITH: 909-948-2868
B.S.H. CONSTRUCTION
10397 HILLSIDE RD.
ALTA. LOMA, CA. 91701
JOB SUPT.: RICHARD HARGRAVE
HAZARD: 2PD. HAZ. GP.I 16/1500 ft²
C-16 STATE LICENSE NO. 636065

TITLE 1ST FLOOR OVERHEAD PIPING PLAN

BOAT HOUSE @ FAIRMONT PARK
2107 LOCUST ST.
RIVERSIDE, CA.

ORNELL FIRE SPRINKLER CO.
110 E. LA CADENA DRIVE
RIVERSIDE, CA. 92501
909-358-3119

DRAWER NO.	94
DRAWN BY	VERN
DATE	5-25-94
SCALE	1/8" = 1'-0"
JOB NO.	94-102
SHEET NO.	2 OF 3

AS-BUILT

DRAWING NUMBER

PLAN HOLD CORPORATION • IRVINE, CALIFORNIA

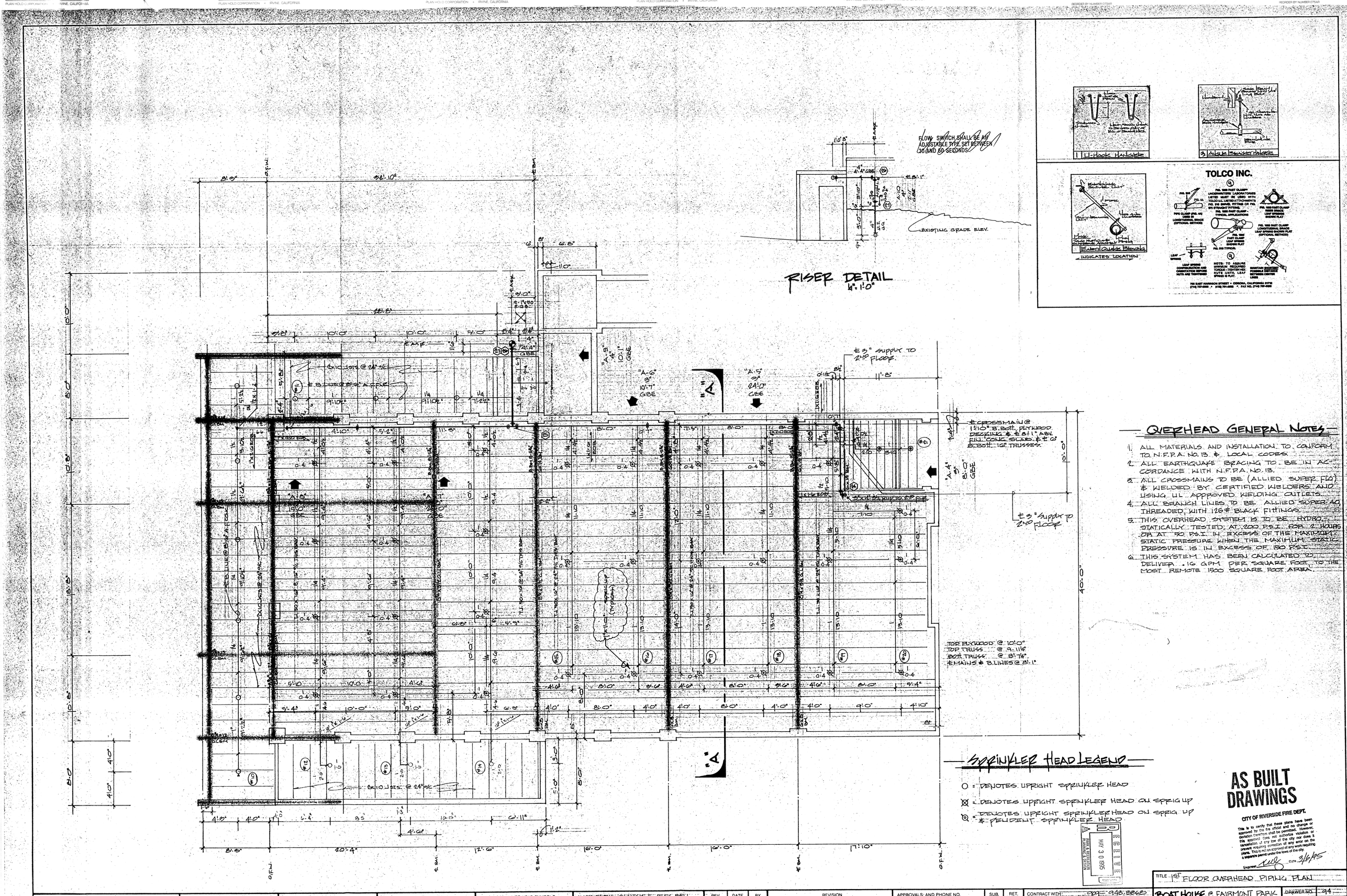

OVERHEAD GENERAL NOTES

1. ALL MATERIALS AND INSTALLATION TO CONFORM TO N.F.P.A. NO. 13 & LOCAL CODES.
2. ALL EARTHQUAKE BRACING TO BE IN ACCORDANCE WITH N.F.P.A. NO. 13.
3. ALL CROSSMAINS TO BE (ALLIED SUPER FLO) & WELDED BY CERTIFIED WELDERS AND USING UL APPROVED WELDING OUTLETS.
4. ALL BRANCH LINES TO BE ALLIED SUPER 40 THREADED, WITH 125# BLACK FITTINGS.
5. THIS OVERHEAD SYSTEM IS TO BE HYDROSTATICALLY TESTED AT 200 P.S.I. FOR 2 HOURS OR AT 50 P.S.I. IN EXCESS OF THE MAXIMUM STATIC PRESSURE WHEN THE MAXIMUM STATIC PRESSURE IS IN EXCESS OF 150 P.S.I.
6. THIS SYSTEM HAS BEEN CALCULATED TO DELIVER .16 GPM PER SQUARE FOOT TO THE MOST REMOTE 1500 SQUARE FOOT AREA.

COLOR CODE FOR MAINS		
A — RED	H — RED-BLUE	Q — WHITE-ORANGE
B — WHITE	J — RED-YELLOW	R — BLUE-YELLOW
C — BLUE	K — RED-GREEN	S — BLUE-GREEN
D — YELLOW	L — RED-ORANGE	T — BLUE-ORANGE
E — GREEN	M — WHITE-BLUE	V — YELLOW-GREEN
F — ORANGE	N — WHITE-YELLOW	W — YELLOW-ORANGE
G — RED-WHITE	P — WHITE-GREEN	X — GREEN-ORANGE

HANGER LEGEND
#1. — HOOK
#2. — EYE ROD & RING
#3. — ANGLE CLIP, ROD & RING
#4. — COACH SCREW ROD & RING
#5. — C-CLAMP, ROD & RING
#6. — THD U-BOLT & 2 C-CLAMPS
#7. — EXPANSION SHELL, ROD & RING
#8. — POWDER STUD, ROD & RING
#9. — WRAP-AROUND HOOKS

SYMBOLS
★ = BOTTOM OF PURLIN OR SLAB TO ℄ OF PIPE
★★ = BOTTOM OF BEAM TO ℄ OF PIPE

THESE SHOP DRAWINGS WERE PREPARED FROM PLANS DATED 2-23-94 AND THE FIRE PROT. IS NOT RESPONSIBLE FOR SUBSEQUENT REVISIONS OR OTHER INFORMATION UNLESS FURNISHED.

STANDARD SYMBOLS
— POST INDICATOR VALVE
— KEY VALVE
— FIRE HYDRANT
— FIRE DEPT. CONNECTION
— O. S & Y GATE VALVE
— SWING CHECK VALVE
— NEW UNDERGROUND
— EXIST UNDERGROUND

SPRINKLER HEAD SYMBOLS
— UPRIGHT ON ½" OUTLET
— PENDENT ON 1" OUTLET
— PENDENT ON ½" OUTLET
— UPRIGHT ON ¾" OUTLET
— PENDENT ON ¾" OUTLET
— FLUSH ON 1" OUTLET
— UPRIGHT ON 1" OUTLET (STUB UP)
— SIDEWALL ON ½" OUTLET
— DRY PENDENT ON 1" OUTLET

ALARM: FLOW SWITCH & ELEC BELL

SPRINKLERS	FINISH	TYPE	DEGREE	QTY
5/8" VIKING MODEL	P.R.	SSU	155°	42
5/8" " "	P.R.	SSP	165°	82
TOTAL SPRINKLERS THIS DRAWING OR JOB				124

REV.	DATE	BY	REVISION
1			
2			
3			
4			
5			
6			
7			

APPROVALS: AND PHONE NO.	SUB.	RET.
1 RIVERSIDE BLDG. DEPT.		
2 RIVERSIDE FIRE DEPT.		
3		
4		

WATER DEPT. AND PHONE NO.

CONTRACT WITH 909-948-8262
P.S.H. CONSTRUCTION
10392 HILLSIDE RD.
ALTA LOMA, CA. 91701
JOB SUPT. RICHARD HARGRAVE
HAZARD: OHC: HAZ. GRP. I 16/1500 ft²
C-16 STATE LICENSE NO. 650005

TITLE 1ST FLOOR OVERHEAD PIPING PLAN

BOAT HOUSE @ FAIRMONT PARK
4107 LOCUST ST.
RIVERSIDE, CA.

ORNELL FIRE SPRINKLER CO.
110 E. LA CADENA DRIVE
RIVERSIDE, CA. 92501
909-788-3119

DRAWER NO.	94
DRAWN BY	VEPU
DATE	9-23-94
SCALE	1/8" = 1'-0"
JOB NO.	94-102
SHEET NO.	1 OF 2

BLUELINE AS-BUILT FORWARDED TO AZ COUNCI 9-27-95

FIRE SPRINKLER PLANS

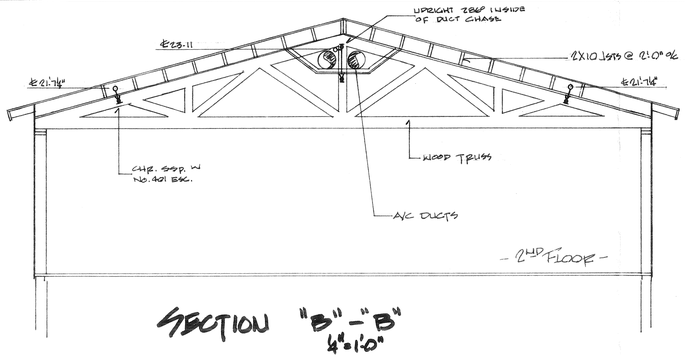

SECTION "B"-"B"
4"=1'-0"

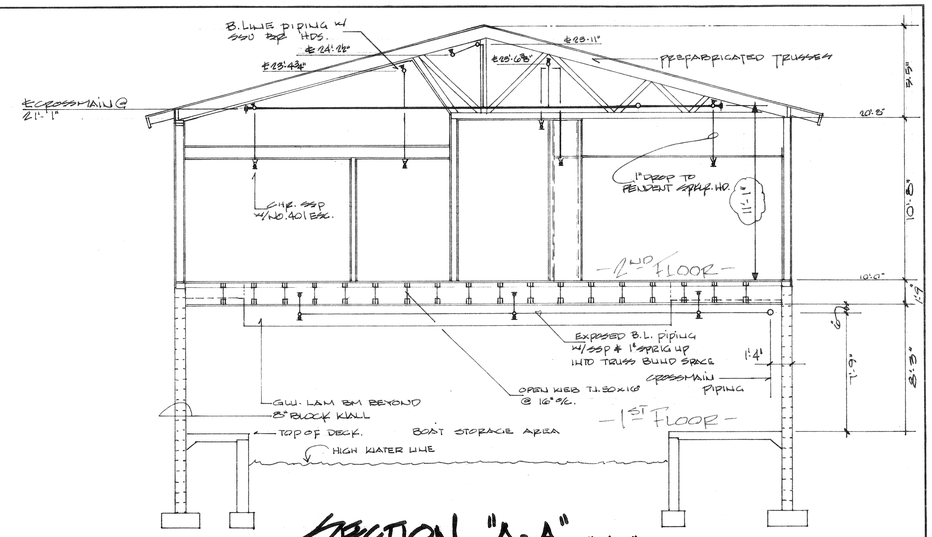

SECTION "A-A"
4"=1'-0"

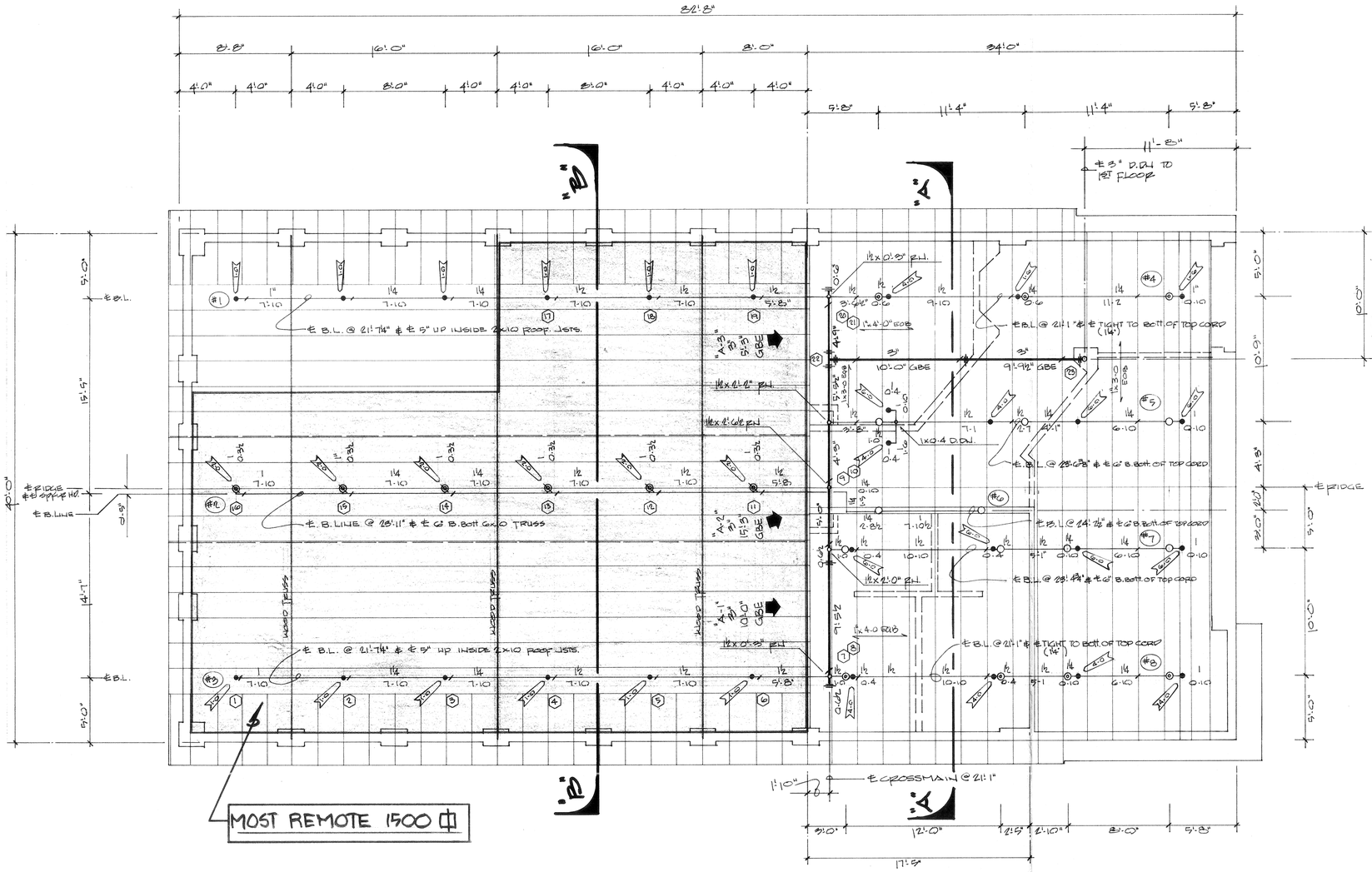

2ND FLOOR OVERHEAD PIPING PLAN
4"=1'-0"

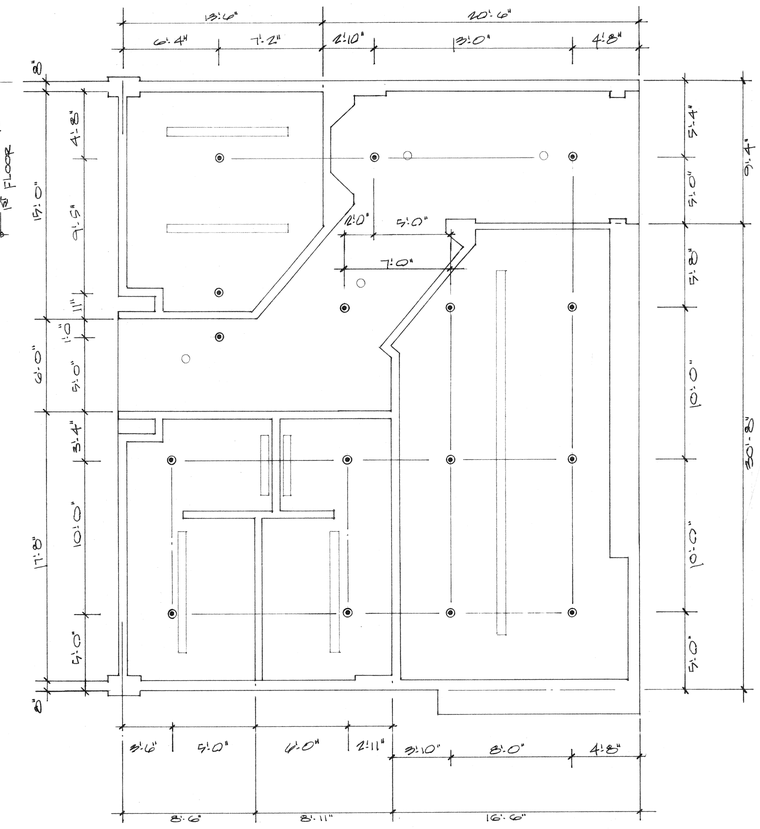

2ND FLOOR REFLECTED CEILING PLAN
4"=1'-0"

① = DENOTES HYD. CALC. REFERENCE POINT
1'-0" = DENOTES DROP LENGTH TO FIN. CEILING.
#1 = DENOTES BRANCH LINE NUMBER

CITY OF RIVERSIDE FIRE DEPT.

This is to certify that these plans have been approved by the fire official and no change or deviation therefrom shall be permitted. However, this approval does not authorize violations or cancellation of any law of the city nor does it prevent requiring correction of any error on the plans. This is not an approval of any work requiring a separate permit under the laws of the city.

Engineer _____ Date 6/10/94

COLOR CODE FOR MAINS			
H — RED-BLUE	Q — WHITE-ORANGE		
— RED-YELLOW	R — BLUE-YELLOW		
REEN	S — BLUE-GREEN		
ORANGE	T — BLUE-ORANGE		
TE-BLUE	V — YELLOW-GREEN		
WHITE-YELLOW	W — YELLOW-ORANGE		
WHITE-GREEN	X — GREEN-ORANGE		

HANGER LEGEND	
#1. — HOOK	
#2. — EYE ROD & RING	
#3. — ANGLE CLIP, ROD & RING	
#4. — COACH SCREW ROD & RING	
#5. — C-CLAMP, ROD & RING	
#6. — THD U-BOLT & 2 C-CLAMPS	
#7. — EXPANSION SHELL, ROD & RING	
#8. — POWDER STUD, ROD & RING	
#9. — WRAP-AROUND HOOKS	

SYMBOLS
★ = BOTTOM OF PURLIN OR SLAB TO ℄ OF PIPE
★★ = BOTTOM OF BEAM TO ℄ OF PIPE

THESE SHOP DRAWINGS WERE PREPARED FROM PLANS DATED 2-25-94 & OR LINE L.L. FIRE PROT. IS NOT RESPONSIBLE FOR SUBSEQUENT REVISIONS OR OTHER INFORMATION UNLESS FURNISHED.

STANDARD SYMBOLS	
P	— POST INDICATOR VALVE
KVS	— KEY VALVE
	— FIRE HYDRANT
Y	— FIRE DEPT. CONNECTION
OS&Y	— O. S. & Y GATE VALVE
N	— SWING CHECK VALVE
	— NEW UNDERGROUND
	— EXIST UNDERGROUND

SPRINKLER HEAD SYMBOLS	
	— UPRIGHT ON ½" OUTLET
	— PENDENT ON 1" OUTLET
	— PENDENT ON ½" OUTLET
	— UPRIGHT ON ¾" OUTLET
	— PENDENT ON ¾" OUTLET
	— FLUSH ON 1" OUTLET
	— UPRIGHT ON 1" OUTLET (STUB UP)
	— SIDEWALL ON ½" OUTLET
	— DRY PENDENT ON 1" OUTLET

ALARM: FLOW SWITCH & ELEC. BELL

SPRINKLERS	FINISH	TYPE	DEGREE	QTY
½" VIKING MODM	BR	SSU	286	51
½" " "	BR	SSP	165	34
½" " "	BR	SSP	286	17
TOTAL SPRINKLERS THIS DRAWING OR JOB				50

REV.	DATE	BY	REVISION

APPROVALS: AND PHONE NO.	SUB.	RET.
1. RIVERSIDE BLDG. DEPT.		
2. RIVERSIDE FIRE DEPT.		
3.		
4.		

WATER DEPT. AND PHONE NO.

CONTRACT WITH: 909-948-8866
E.S.H. CONSTRUCTION
10892 HILLSIDE RD.
ALTA LOMA, CA. 91701

JOB SUPT.: RICHARD HARGRAVE

HAZARD: ORD. GP. I - .16/1000 ⌀

C-16 STATE LICENSE NO. 656065

TITLE 2ND FLOOR REFLECTED/PIPING PLAN

BOAT HOUSE @ FAIRMONT PARK
2907 LOCUST ST.
RIVERSIDE, CA.

ORNELL FIRE SPRINKLER CO.
170 E. LA CADENA DRIVE
RIVERSIDE, CA. 92501
909-328-3119

DRAWER NO.	94
DRAWN BY	VERN
DATE	5-25-94
SCALE	¼"=1'-0"
JOB NO.	94-102
SHEET NO.	3 OF 3

AS-BUILT

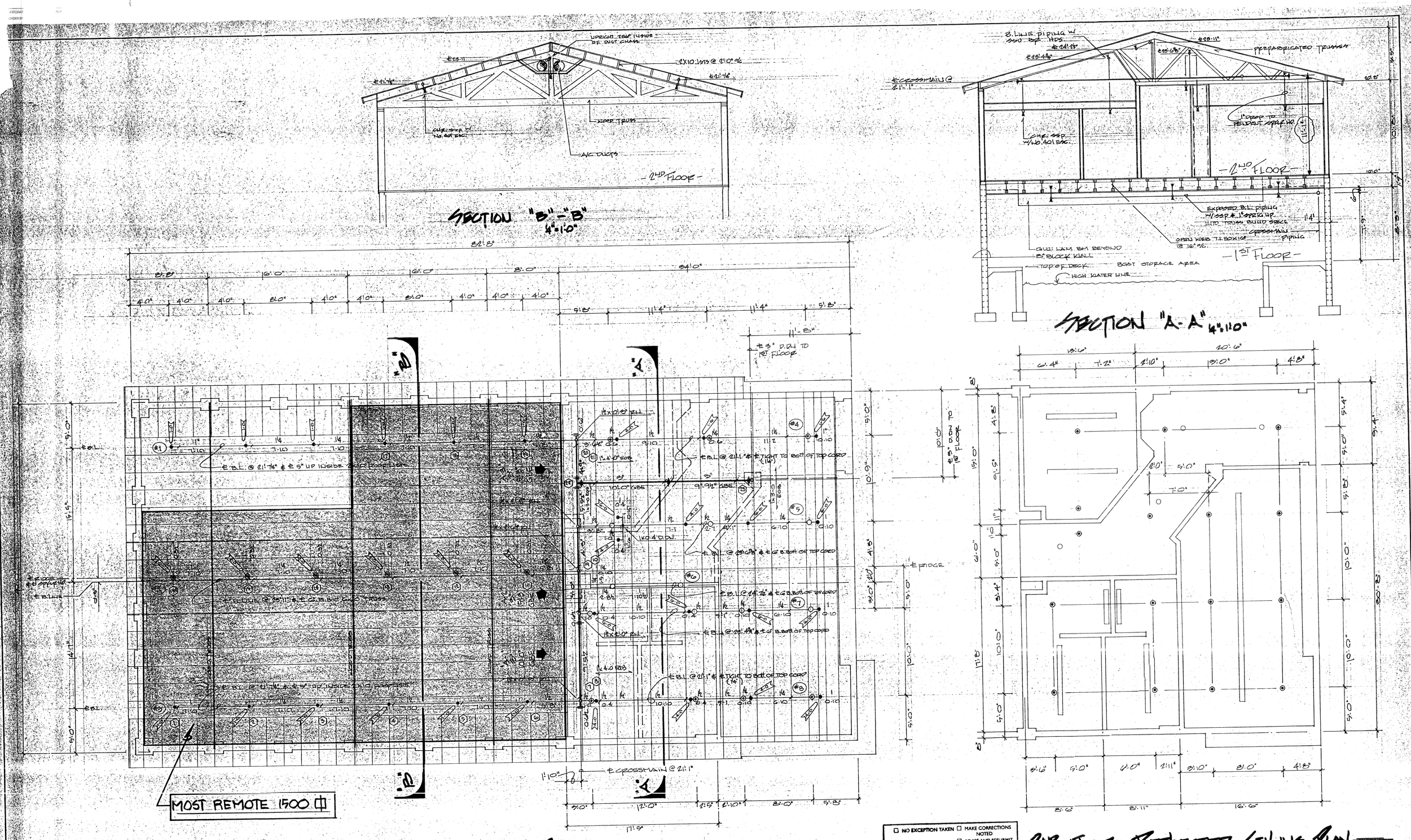

① = DENOTES HYD. CALC. REFERENCE POINT
1-0 = DENOTES DROP LENGTH TO FIN. CEILING.
#1 = DENOTES BRANCH LINE NUMBER

☐ NO EXCEPTION TAKEN ☐ MAKE CORRECTIONS NOTED
☐ REJECTED ☐ REVISE AND RESUBMIT
☐ SUBMIT SPECIFIED ITEM

Checking is only for general conformance with the design concept of the project and general compliance with the information given in the contract documents. Any action shown is subject to the requirements of the plans and specifications. Contractor is responsible for: dimensions which shall be confirmed and correlated at the job site; fabrication processes and techniques of construction; coordination of his work with that of all other trades; and the satisfactory performance of his work.

CITY OF RIVERSIDE
PARK & RECREATION DEPARTMENT
DATE _____ BY _____

RECEIVED JUN 2 1994 PARK & RECREATION PLANNING & DESIGN

COLOR CODE FOR MAINS		
A — RED	H — RED-BLUE	Q — WHITE-ORANGE
B — WHITE	J — RED-YELLOW	R — BLUE-YELLOW
C — BLUE	K — RED-GREEN	S — BLUE-GREEN
D — YELLOW	L — RED-ORANGE	T — BLUE-ORANGE
E — GREEN	M — WHITE-BLUE	V — YELLOW-GREEN
F — ORANGE	N — WHITE-YELLOW	W — YELLOW-ORANGE
G — RED-WHITE	P — WHITE-GREEN	X — GREEN-ORANGE

HANGER LEGEND
#1. — HOOK
#2. — EYE ROD & RING
#3. — ANGLE CLIP, ROD & RING
#4. — COACH SCREW ROD & RING
#5. — C-CLAMP, ROD & RING
#6. — THD U-BOLT & 2 C-CLAMPS
#7. — EXPANSION SHELL, ROD & RING
#8. — POWDER STUD, ROD & RING
#9. — WRAP-AROUND HOOKS

SYMBOLS
★ = BOTTOM OF PURLIN OR SLAB TO ℄ OF PIPE
★★ = BOTTOM OF BEAM TO ℄ OF PIPE

THESE SHOP DRAWINGS WERE PREPARED FROM PLANS DATED 3-25-95 ORNELL FIRE PROT. IS NOT RESPONSIBLE FOR SUBSEQUENT REVISIONS OR OTHER INFORMATION UNLESS FURNISHED.

STANDARD SYMBOLS
— POST INDICATOR VALVE
— KEY VALVE
— FIRE HYDRANT
— FIRE DEPT. CONNECTION
— O, S & Y GATE VALVE
— SWING CHECK VALVE
— NEW UNDERGROUND
— EXIST UNDERGROUND

SPRINKLER HEAD SYMBOLS
— UPRIGHT ON ½" OUTLET
— PENDENT ON 1" OUTLET
— PENDENT ON ½" OUTLET
— UPRIGHT ON ¾" OUTLET
— PENDENT ON ¾" OUTLET
— FLUSH ON 1" OUTLET
— UPRIGHT ON 1" OUTLET (STUB UP)
— SIDEWALL ON ½" OUTLET
— DRY PENDENT ON 1" OUTLET

ALARM: FLOW SWITCH & ELEC. BELL

SPRINKLERS	FINISH	TYPE	DEGREE	QTY
½" VIKING MODM	BR	SSU	286	9
½" " "	BR	SSP	165	34
½" " "	BR	SSP	286	7
TOTAL SPRINKLERS THIS DRAWING OR JOB				50

REV.	DATE	BY	REVISION

APPROVALS: AND PHONE NO.	SUB.	RET.
1. RIVERSIDE BLDG. DEPT.		
2. RIVERSIDE FIRE DEPT.		
3.		
4.		
WATER DEPT. AND PHONE NO.		

CONTRACT WITH: 909-948-8868
F.S.H. CONSTRUCTION
10392 HILLSIDE RD.
ALTA LOMA, CA. 91701
JOB SUPT.: RICHARD HARGRAVE
HAZARD: ORD. GP. I - .16/1500⌀
C-16 STATE LICENSE NO. 656065

TITLE 2ND FLOOR REFLECTED/PIPING PLAN

BOAT HOUSE @ FAIRMONT PARK
2707 LOCUST ST.
RIVERSIDE, CA.

ORNELL FIRE SPRINKLER CO.
170 E. LA CADENA DRIVE
RIVERSIDE, CA. 92501
909-338-3119

DRAWER NO. 0
DRAWN BY
DATE
SC

AS-BUILT

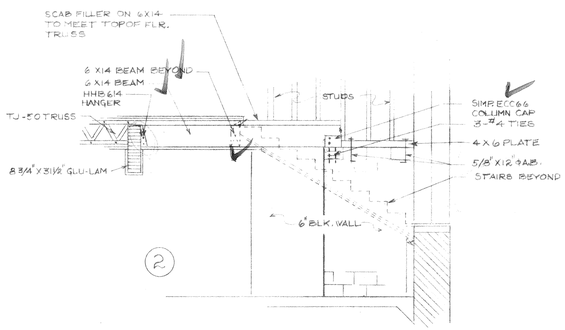

SEE A-7 SECTION E.
REVISED BEAM

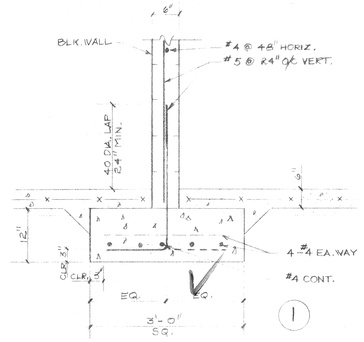

SEE (11/S-4) FOOTING @ STORAGE
DETAIL OF REVISED CORNER FOOTING
N.T.S.

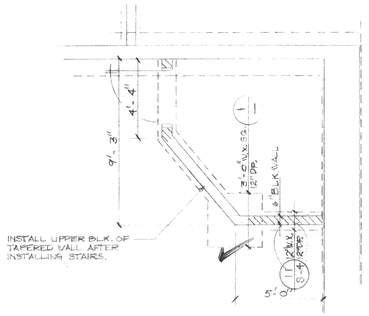

SEE S-1 (TOP RIGHT CORNER @ STAIRS) 1/4"=1'-0"
REVISED CORNER FOOTING.

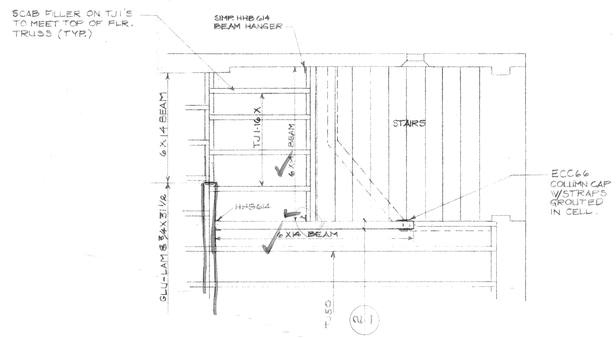

SEE S-2 (TOP RIGHT CORNER @ STAIRS) 1/4"=1'-0"
REVISED FLOOR TRUSS & BEAM

clarification only - no fees
owner's copy

"APPROVED"
CITY OF RIVERSIDE
BUILDING & SAFETY
THIS APPROVAL DOES NOT AUTHORIZE VIOLATION OF ANY
PROVISION OF ANY STATE OR LOCAL BUILDING OR
NON-BUILDING ORDINANCE OR STATUTE OR
ERROR SUBSEQUENTLY ISSUED OR CONFIRMED IS NOT
CONSTRUCTED DUE TO ERRORS IN THESE PLANS.
Permit: 92-0682
Date: 8-19-92
By: W. [illegible]

RECEIVED
AUG 11 1994
PARK & RECREATION PLANNING & DESIGN

11 Aug 94

LICENSED ARCHITECT
RICHARD P. FRICK
C-5668
EXP. 8-31-95
STATE OF CALIFORNIA

Cole & Frick
Architects, A.I.A.

4195 Chestnut Street
Riverside, California
92501 714/684-4011

BOATHOUSE for FAIRMOUNT PARK
2107 Lo Cust
CITY OF RIVERSIDE
PARK & RECREATION DEPARTMENT

REVISIONS TO PLAN
#P-0112

REVISIONS

DRAWN BY
P.S.

DATE: 8-9-94
JOB NUMBER

SHEET NO.
OF

DRAWING NUMBER
PLAN HOLD CORPORATION • IRVINE, CALIFORNIA
REORDER BY NUMBER 075AR
POSITION EDGE OF PRINT ON THIS LINE

DRAWING NUMBER
PLAN HOLD CORPORATION • IRVINE, CALIFORNIA
REORDER BY NUMBER 075AR
POSITION EDGE OF PRINT ON THIS LINE

DRAWING NUMBER
PLAN HOLD CORPORATION • IRVINE, CALIFORNIA
REORDER BY NUMBER 075AR
POSITION EDGE OF PRINT ON THIS LINE

DRAWING NUMBER
PLAN HOLD CORPORATION • IRVINE, CALIFORNIA
REORDER BY NUMBER 075AR
POSITION EDGE OF PRINT ON THIS LINE

DRAWING NUMBER
PLAN HOLD CORPORATION • IRVINE, CALIFORNIA
REORDER BY NUMBER 075AR
POSITION EDGE OF PRINT ON THIS LINE

DRAWING NUMBE
PLAN HOLD CORPORATION • IRVINE, C
REORDER BY NUMBER 075AR
POSITION EDGE OF PRINT ON THIS LINE

245
FA-248

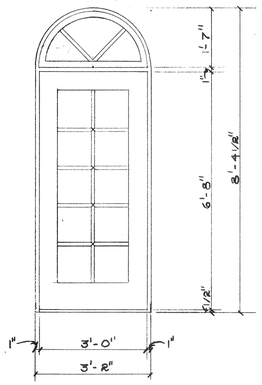

1/2"=1'-0"

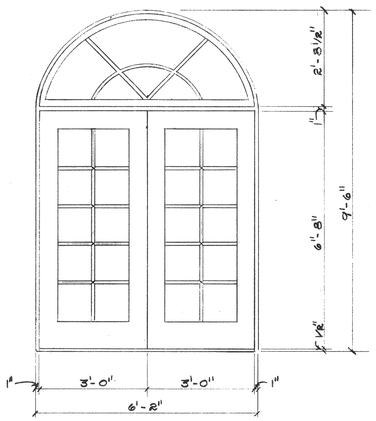

1/2"=1'-0"

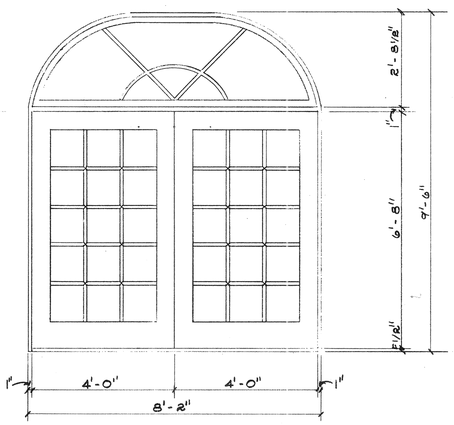

1/2"=1'-0"

Cole & Frick
Architects, A.I.A.

4195 Chestnut Street
Riverside, California
92501 714/684-4011

BOATHOUSE for FAIRMOUNT PARK

CITY OF RIVERSIDE
PARKS & RECREATION DEPARTMENT

CLARIFICATION DRAWING
EXTERIOR DOORS &
WINDOWS

REVISIONS

DRAWN BY
R.S.

DATE: 9-10-93
JOB NUMBER

SHEET NO. 13
OF 28

PLAN NO. P-0113

HANDRAIL SHOP DRAWINGS

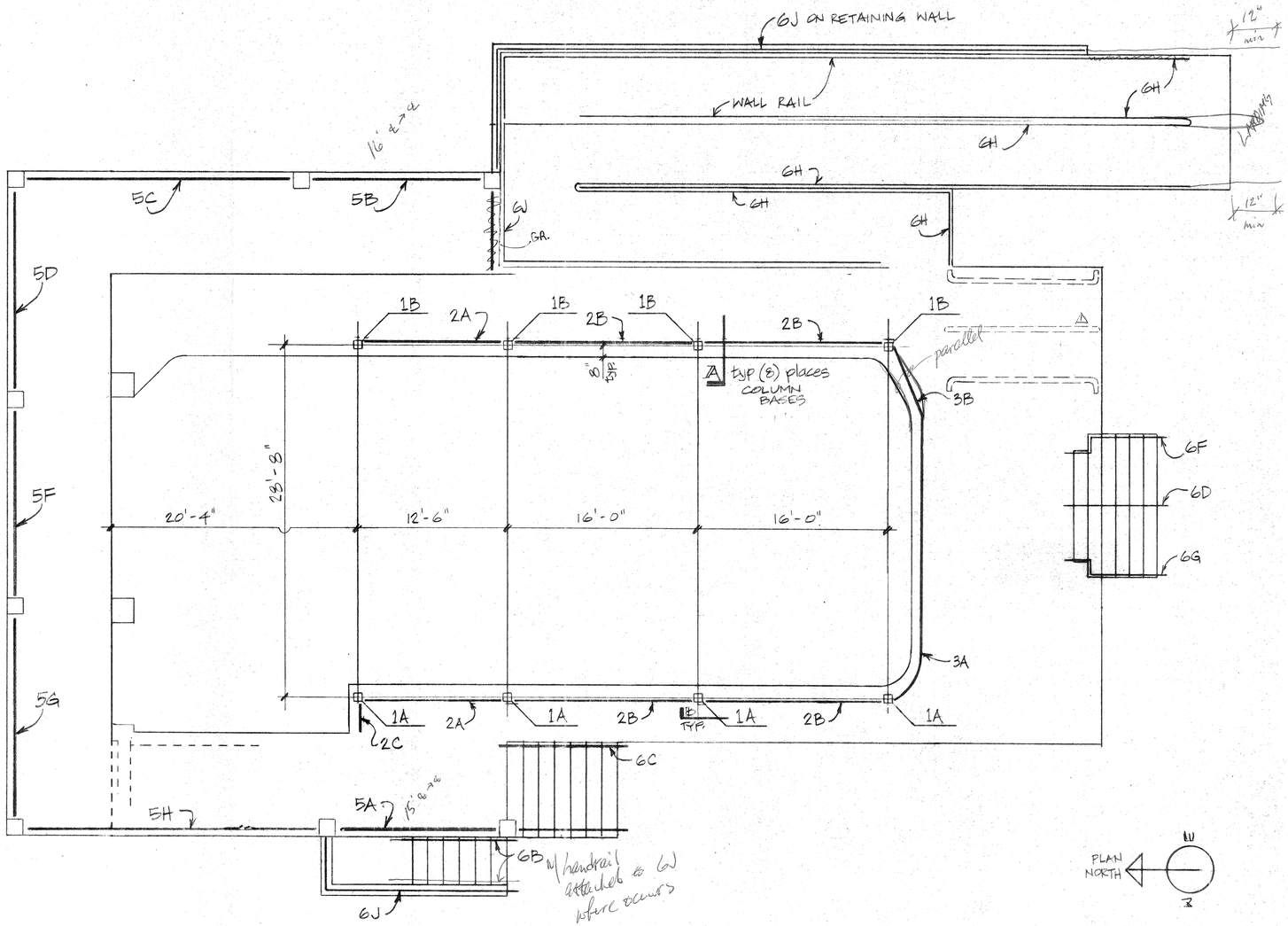

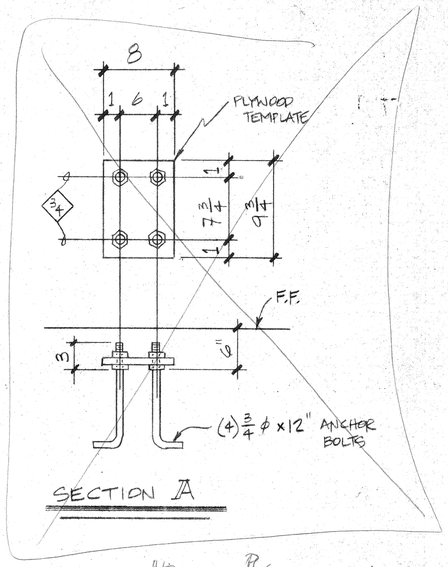

REPLACE w/ "EMBED PLS @ DOCK RAIL - 8A"

SHOP PAINT: ONE COAT PRIMER TWO COATS FINISH COLOR

☐ NO EXCEPTION TAKEN ☑ MAKE CORRECTIONS NOTED
☐ REJECTED ☐ REVISE AND RESUBMIT ☐ SUBMIT SPECIFIED ITEM

Checking is only for general conformance with the design concept of the project and general compliance with the information given in the contract documents. Any action shown is subject to the requirements of the plans and specifications. Contractor is responsible for: dimensions which shall be confirmed and correlated at the job site; fabrication processes and techniques of construction; coordination of his work with that of all other trades; and the satisfactory performance of his work.

CITY OF RIVERSIDE
PARK & RECREATION DEPARTMENT
DATE 12/4/94 BY

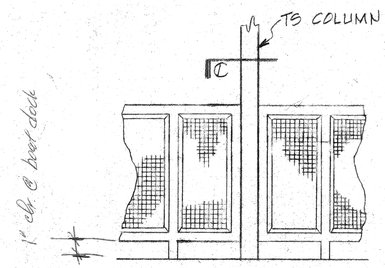

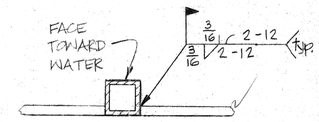

BOLTS	UNLESS NOTED	REVISIONS		
OPEN HOLES		NO	DATE	DESCRIPTION
EDGE DIST.				
PAINT				

MILLER'S FAB & WELD CORP
8100 INDUSTRIAL AVE.
RIVERSIDE, CALIF. (714)369-3100

PROJECT BOATHOUSE - FAIRMOUNT PARK
RIVERSIDE

ARCH'T		CONTR. RSH	
ENG.			
DWN. BY	DATE	SHEET NO. E1	JOB NO. 7678
CHK. BY			

RECEIVED DEC - 2 1994 PARK & RECREATION PLANNING & DESIGN

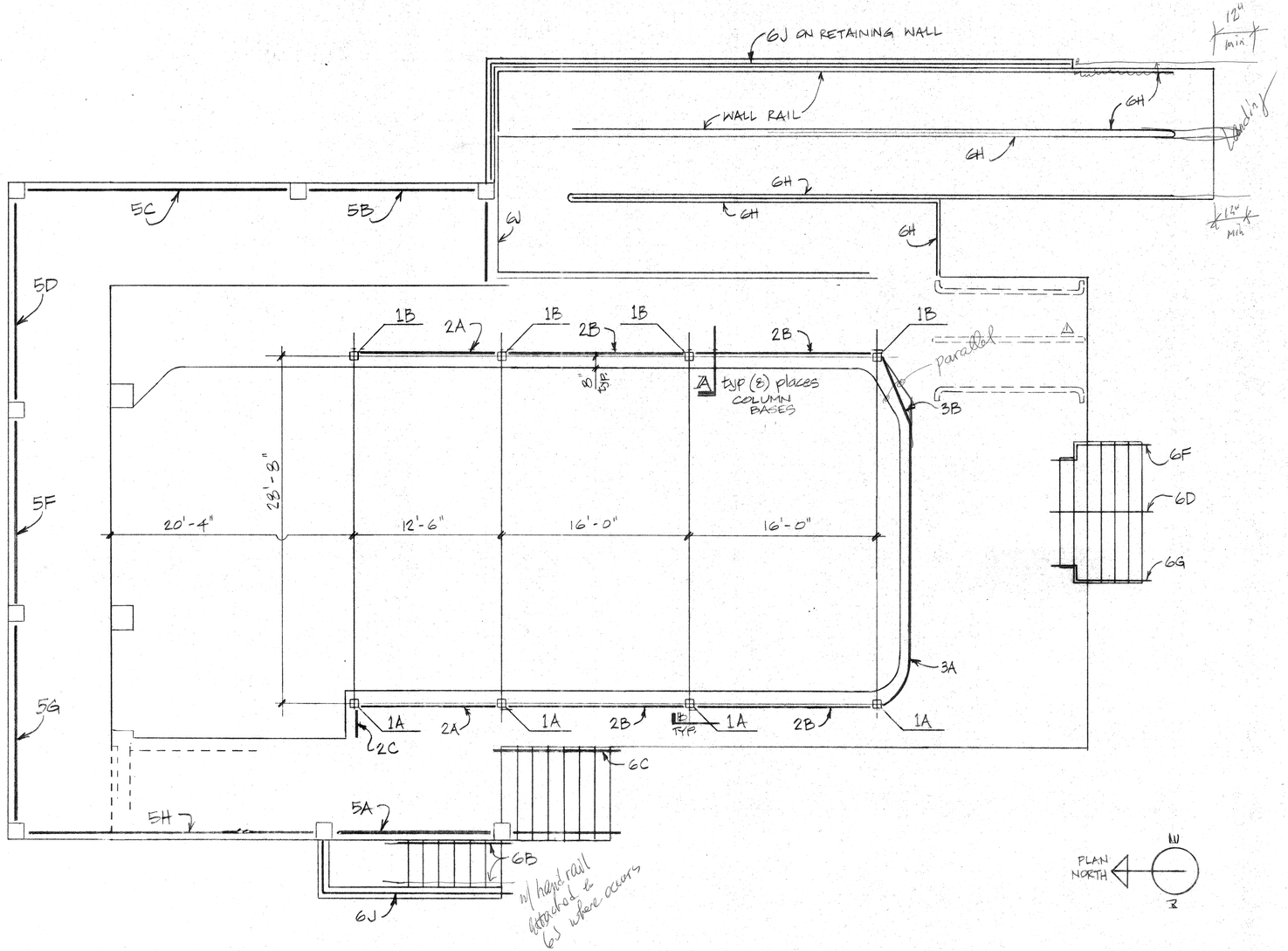

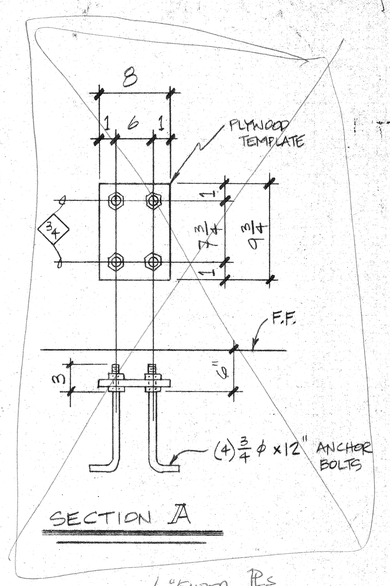

SECTION A

REPLACE w/ "EMBED PLS @ DECK RAIL - 8A"

SHOP PAINT:
ONE COAT PRIMER
TWO COATS FINISH COLOR

☐ NO EXCEPTION TAKEN ☑ MAKE CORRECTIONS NOTED
☐ REJECTED ☐ REVISE AND RESUBMIT ☐ SUBMIT SPECIFIED ITEM

Checking is only for general conformance with the design concept of the project and general compliance with the information given in the contract documents. Any action shown is subject to the requirements of the plans and specifications. Contractor is responsible for: dimensions which shall be confirmed and correlated at the job site; fabrication processes and techniques of construction; coordination of his work with that of all other trades; and the satisfactory performance of his work.

CITY OF RIVERSIDE
PARK & RECREATION DEPARTMENT
DATE 12/2/94 BY

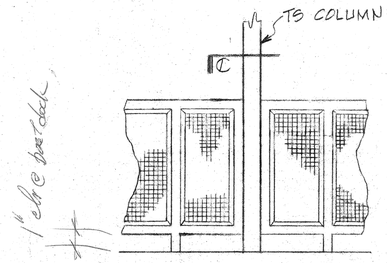

VIEW B

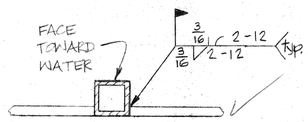

SECTION ℄

RECEIVED
DEC - 2 1994
PARK & RECREATION PLANNING & DESIGN

BOLTS	UNLESS NOTED	REVISIONS
OPEN HOLES		NO. DATE DESCRIPTION
EDGE DIST.		
PAINT		

MILLER'S FAB & WELD CORP
6100 INDUSTRIAL AVE.
RIVERSIDE, CALIF. (714)369-3100

PROJECT BOATHOUSE - FAIRMOUNT PARK
RIVERSIDE

ARCH'T		CONTR.	RSH
ENG.			
DWN. BY	DATE	SHEET NO. E1	JOB NO. 7678
CHK. BY			

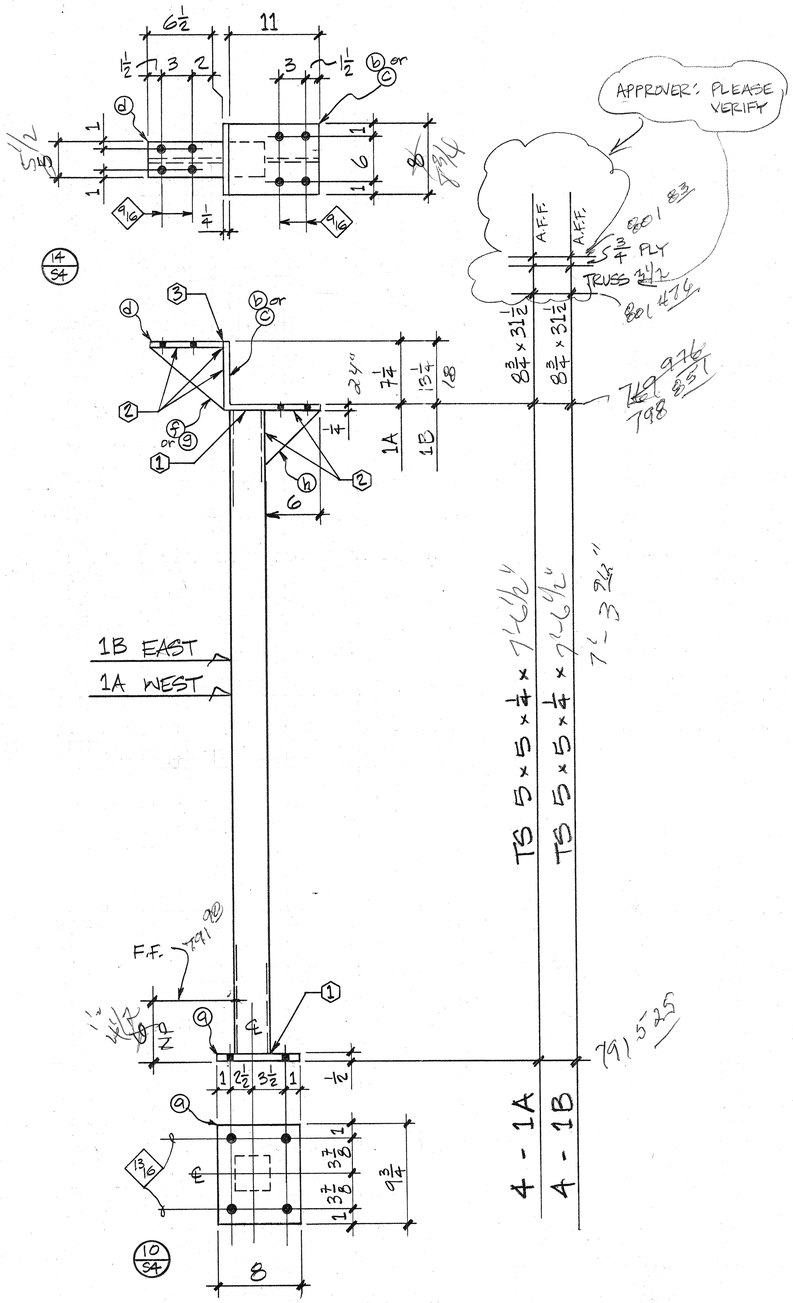

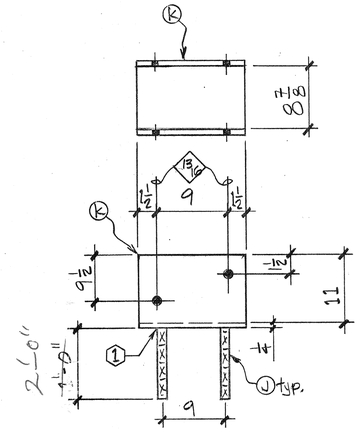

F.O.B.

4	b	PL	1/4 x [illegible]			
4	c	PL	1/4 x 8			
8	d	PL	1/4 x 5 x			
4	f	PL	1/4 x 6 1/2 x			
4	g	PL	1/4 x 6 1/2 x	1	1 1/2	
8	h	PL	1/4 x 6 x		6	GUSS
16	J	ϕ	#6 REBAR x	1	0	A706
8	k	PL	1/4 x 12 x	2	6 7/8	BROKE
4	1A	TS	5 x 5 x 1/4 x			2SC
4	1B	TS	5 x 5 x 1/4 x			2SC
8	1C		EMBEDS			

☐ NO EXCEPTION TAKEN ☒ MAKE CORRECTIONS NOTED
☐ REJECTED ☐ REVISE AND RESUBMIT
☐ SUBMIT SPECIFIED ITEM

Checking is only for general conformance with the design concept of the project and general compliance with the information given in the contract documents. Any action shown is subject to the requirements of the plans and specifications. Contractor is responsible for: dimensions which shall be confirmed and correlated at the job site; fabrication processes and techniques of construction; coordination of his work with that of all other trades; and the satisfactory performance of his work.

CITY OF RIVERSIDE
PARK & RECREATION DEPARTMENT
DATE 8/9/94 BY [illegible]

Neal L. [illegible] 8 Aug 94

RECEIVED AUG 9 1994 PARK & RECREATION PLANNING & DESIGN

RECEIVED JUL 20 1994 PARK & RECREATION PLANNING & DESIGN

FIELD BOLTS

GENERAL NOTES

HOLE SIZE U.N.O.

SHOP PAINT
ONE STANDARD PRIMER COAT

NOT TO SCALE

SPECIFICATIONS
AISC latest edition
Code of Standard Practice

Licensed L.A. Fabricator
Type I, Steel - #134

PLATE, ANGLE, CHANNEL, & BAR	A 36
STRUCTURAL TUBE	A 501
STRUCTURAL PIPE	A 53B
CONNECTION AND ANCHOR BOLTS	A 307
REINFORCING BARS	A 706
ELECTRODE	E 70T
	E 7018
	E 6024

MILLER'S FAB & WELD
6100 Industrial Ave.
Riverside, Ca. 92504
(714) 359-3100

725 W. Fletcher
Orange, Ca. 92665
(714) 637-6426

WELD SCHEDULE		
1	1/4	
2	3/16 3/16	
3	3/16	GRIND FLAT

REV

PROJECT: BOATHOUSE - FAIRMOUNT PARK
RIVERSIDE

COLUMNS

CONTRACTOR: RSH

ARCHT.

ENG.

DRAW.

CHECK.

ERECT

FOB

SHEET 1

JOB

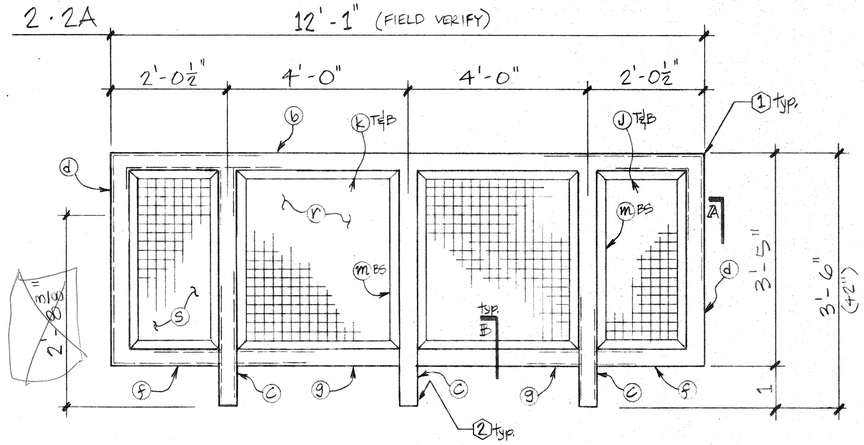

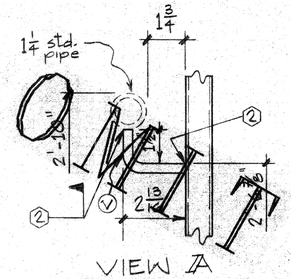

VIEW A

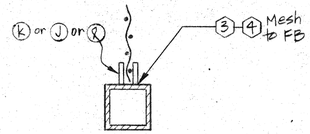

SECTION B

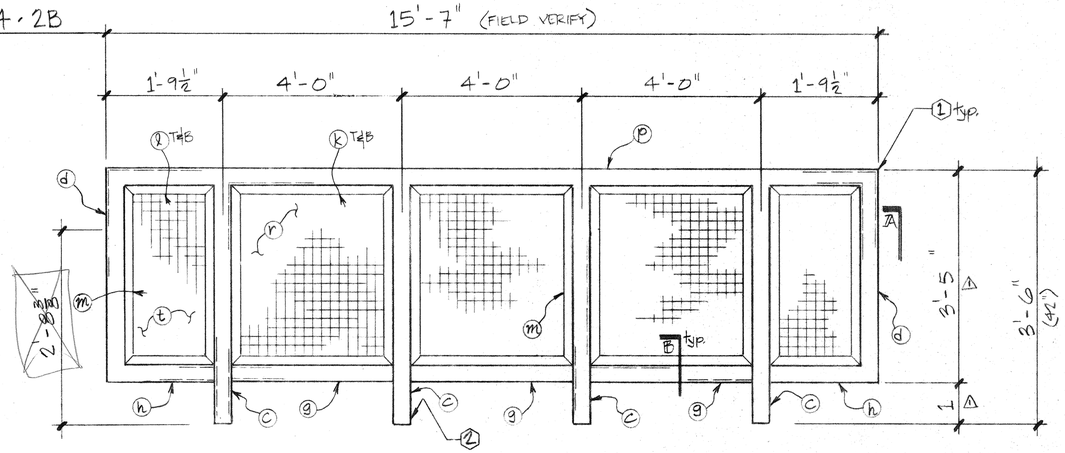

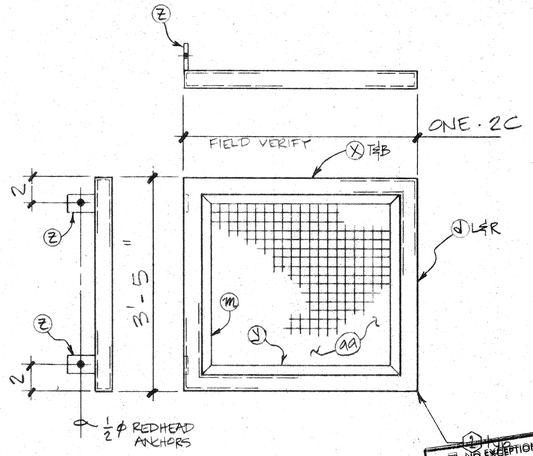

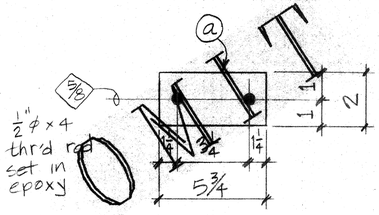

OMIT

BILL OF MATERIALS

NO. OF PIECES	ITEM MARK	SHAPE	DESCRIPTION	FEET	INCHES	REMARKS
~~22~~	~~a~~	~~PL~~	~~¼ × 2 ×~~		~~5¾~~	~~w/2 ϕ~~
2	b	TS	1¼ × 1¼ × .120 ×	12	1	M2E
22	c	TS	1¼ × 1¼ × .120 ×	3	4¾	2SC
12	d	TS	1¼ × 1¼ × .120 ×	3	5	M2E
4	f	TS	1¼ × 1¼ × .120 ×	1	11⅞	M1E
16	g	TS	1¼ × 1¼ × .120 ×	3	10¾	2SC
8	h	TS	1¼ × 1¼ × .120 ×	1	8⅞	M1E
16	J	FB	3/16 × 1 ×	1	10 9/16	M2E
64	k	FB	3/16 × 1 ×	3	10 11/16	M2E
32	l	FB	3/16 × 1 ×	1	7 9/16	M2E
116	m	FB	3/16 × 1 ×	3	2 3/16	M2E
4	p	TS	1¼ × 1¼ × .120 ×	15	7	M2E
16	r	WM	1" × .135 × 3'-2¼	3	10¼	Welded Wire MESH
4	s	WM	1" × .135 × 1'-10⅛	3	2¼	Welded Wire MESH
8	t	WM	1" × .135 × 1'-7⅛	3	2¼	Welded Wire MESH
~~24~~	~~v~~	~~RB~~	~~½ ϕ ×~~		~~3¾~~	~~BENT~~
2	x	TS	1¼ × 1¼ × .120 ×			M2E
4	y	FB	3/16 × 1 ×			M2E
2	z	PL	⅜ × 2 ×		4	w/ one ϕ
ONE	aa	WM	1" × .135 × 3'-2¼			

FIELD BOLTS

GENERAL NOTES

HOLE SIZE U.N.O.

SHOP PAINT
ONE STANDARD PRIMER COAT

NOT TO SCALE

SPECIFICATIONS
AISC latest edition
Code of Standard Practice

Licensed L.A. Fabricator
Type I, Steel - #134

PLATE, ANGLE, CHANNEL, & BAR	A 36
STRUCTURAL TUBE	A 501
STRUCTURAL PIPE	A 53B
CONNECTION AND ANCHOR BOLTS	A 307
REINFORCING BARS	A 706
ELECTRODE	E 70T E 7018 ER 70S-6

MILLER'S FAB & WELD

6100 Industrial Ave.
Riverside, Ca. 92504
(714) 359-3100

725 N. Fletcher
Orange, Ca. 92665
(714) 637-6426

PROJECT: BOATHOUSE - Fairmount Park
Riverside, ca.

LOWER LEVEL RAILING

CONTRACTOR: RSH

ARCHT.

ENG.

DRAW SSP

CHECK

ERECT FOB

SHEET 2

JOB 7678

WELD SCHEDULE		
1	ϕ 1/8 V	GRIND SMOOTH
2	ϕ 3/16 V	
3	1/8 V 1-6	
4	1/8 V	STITCH
⬡		

REV

1st NOV

PLAN REVIEW

RECEIVED
DEC - 2 1994
PARK & RECREATION PLANNING & DESIGN

☐ NO EXCEPTION TAKEN ☑ MAKE CORRECTIONS NOTED
☐ REVISE AND RESUBMIT
☐ REJECTED ☐ SUBMIT SPECIFIED ITEM

Checking is only for general conformance with the design concept of the project and general compliance with the information given in the contract documents. Any action shown is subject to the requirements of the plans and specifications. Contractor is responsible for: dimensions which shall be confirmed and correlated at the job site; fabrication processes and techniques of construction; coordination of his work with that of all other trades; and the satisfactory performance of his work.

CITY OF RIVERSIDE
PARK & RECREATION DEPARTMENT
DATE 12/12/94 BY

HANDRAIL SHOP DRAWINGS

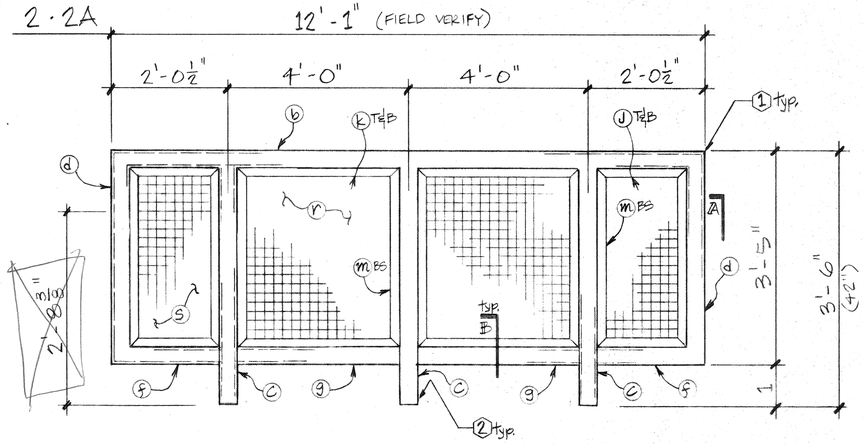

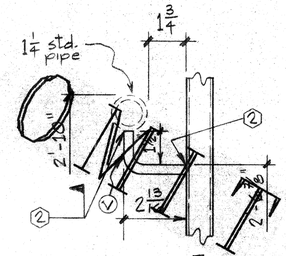

VIEW A

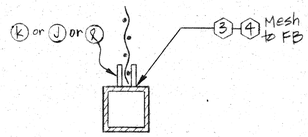

SECTION B

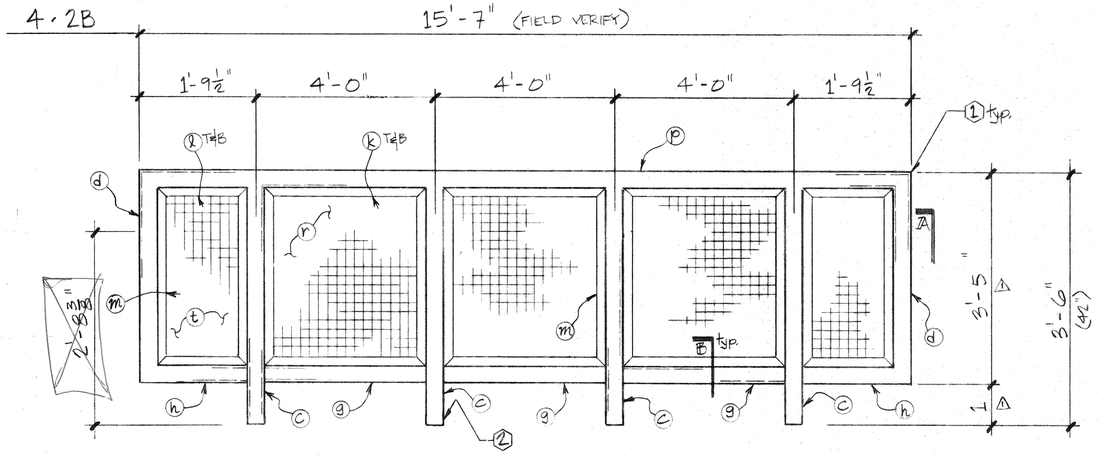

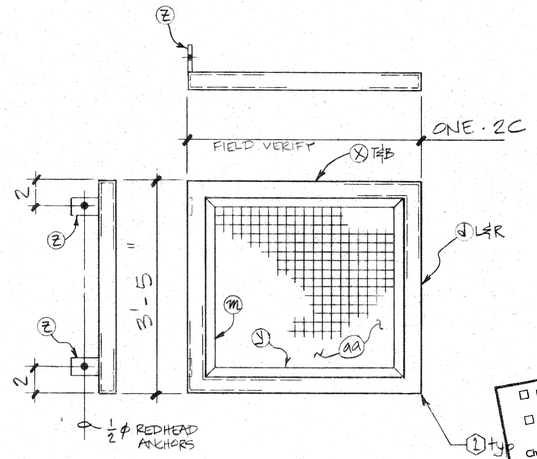

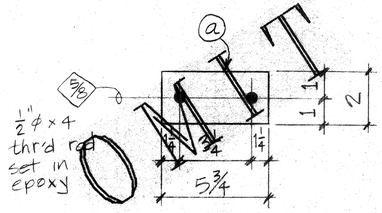

BILL OF MATERIALS

No. of Pieces	Piece Mark	Shape	Description	Feet	Inches	Remarks
△1	~~22~~	~~a~~	~~PL 1/4 × 2 ×~~		~~5¾~~	~~W/2 ϕ~~
2	b	TS	1¼ × 1¼ × .120 ×	12	1	M2E
22	c	TS	1¼ × 1¼ × .120 ×	3	4¾	2SC
12	d	TS	1¼ × 1¼ × .120 ×	3	5	M2E
4	f	TS	1¼ × 1¼ × .120 ×	1	11⅞	M1E
16	g	TS	1¼ × 1¼ × .120 ×	3	10¾	2SC
8	h	TS	1¼ × 1¼ × .120 ×	1	8⅞	M1E
16	j	FB	3/16 × 1 ×	1	10 9/16	M2E
64	k	FB	3/16 × 1 ×	3	10 1/16	M2E
32	l	FB	3/16 × 1 ×	1	7 9/16	M2E
116	m	FB	3/16 × 1 ×	3	2 9/16	M2E
4	p	TS	1¼ × 1¼ × .120 ×	15	7	M2E
16	r	WM	1" × .135 × 3'-2¼	3	10¼	Welded Wire MESH
4	s	WM	1" × .135 × 1'-10⅛	3	2¼	Welded Wire MESH
8	t	WM	1" × .135 × 1'-7⅛	3	2¼	Welded Wire MESH
△1	~~34~~	~~v~~	~~RD 1/2 ϕ ×~~		~~3¾~~	~~BENT~~
2	x	TS	1¼ × 1¼ × .120 ×			M2E
4	y	FB	3/16 × 1 ×			M2E
2	z	PL	3/8 × 2 ×		4	w/ one ϕ
ONE	aa	WM	1" × .135 × 3'-2¼			

FIELD BOLTS

GENERAL NOTES

HOLE SIZE U.N.O.

SHOP PAINT
ONE STANDARD PRIMER COAT

NOT TO SCALE

SPECIFICATIONS
AISC latest edition
Code of Standard Practice

Licensed L.A. Fabricator
Type I, Steel - #134

PLATE, ANGLE, CHANNEL, & BAR	A 36
STRUCTURAL TUBE	A 501
STRUCTURAL PIPE	A 53B
CONNECTION AND ANCHOR BOLTS	A 307
REINFORCING BARS	A 706
ELECTRODE	E 70T
	E 7018
	AWS D1.1

☐ NO EXCEPTION TAKEN ☒ MAKE CORRECTIONS NOTED
☐ REJECTED ☐ REVISE AND RESUBMIT ☐ SUBMIT SPECIFIED ITEM

Checking is only for general conformance with the design concept of the project and general compliance with the information given in the contract documents. Any action shown is subject to the requirements of the plans and specifications. Contractor is responsible for: dimensions which shall be confirmed and correlated at the job site; fabrication processes and techniques of construction; coordination of his work with that of all other trades; and the satisfactory performance of his work.

CITY OF RIVERSIDE
PARK & RECREATION DEPARTMENT
DATE 12/2/94 BY

RECEIVED
DEC - 2 1994
PARK & RECREATION PLANNING & DESIGN

WELD SCHEDULE			REV
1	⊙ 1/8 V	GRIND SMOOTH	
2	⊙ 3/16 V		
3	1/8 V 1-6		
4	1/8 V	STITCH	
⬡			

PLAN REVIEW 22 NOV

MILLER'S FAB & WELD
6100 Industrial Ave.
Riverside, Ca. 92504
(714) 355-3100
725 W. Fletcher
Orange, Ca. 92665
(714) 637-8426

PROJECT: BOATHOUSE - Fairmount Park
Riverside, Ca.

LOWER LEVEL RAILING

CONTRACTOR: RSH

ARCHT. ENG.

DRAW SSP | CHECK | ERECT ~~FOB~~ | SHEET 2 | JOB 7678

HANDRAIL SHOP DRAWINGS

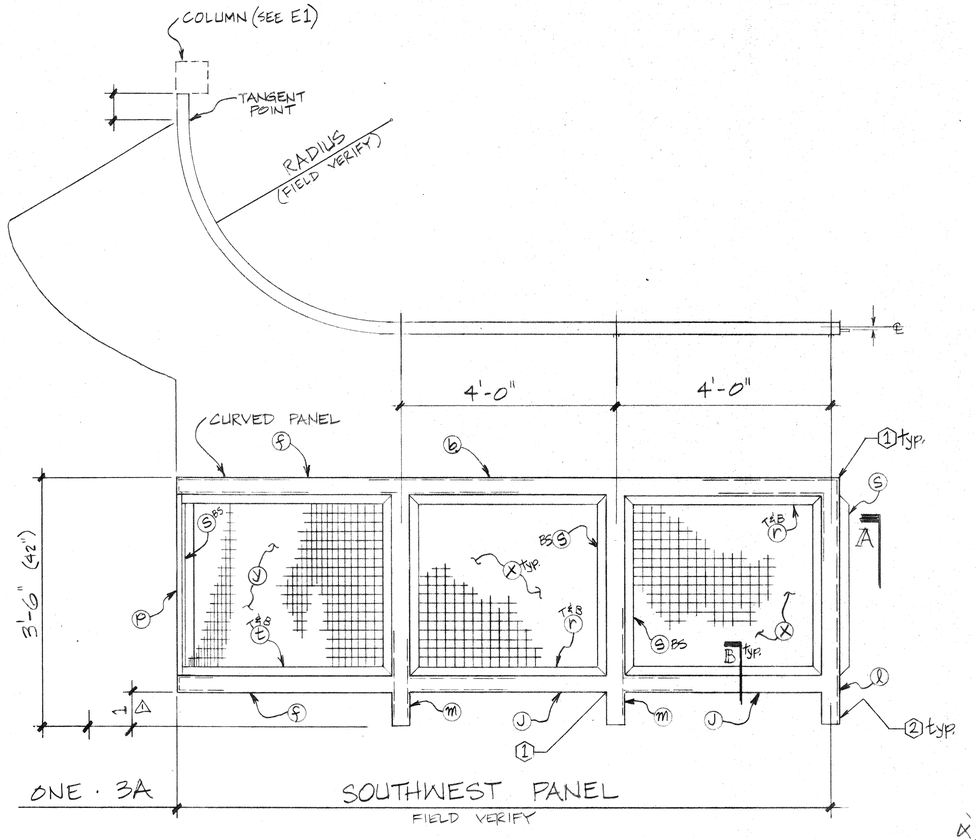

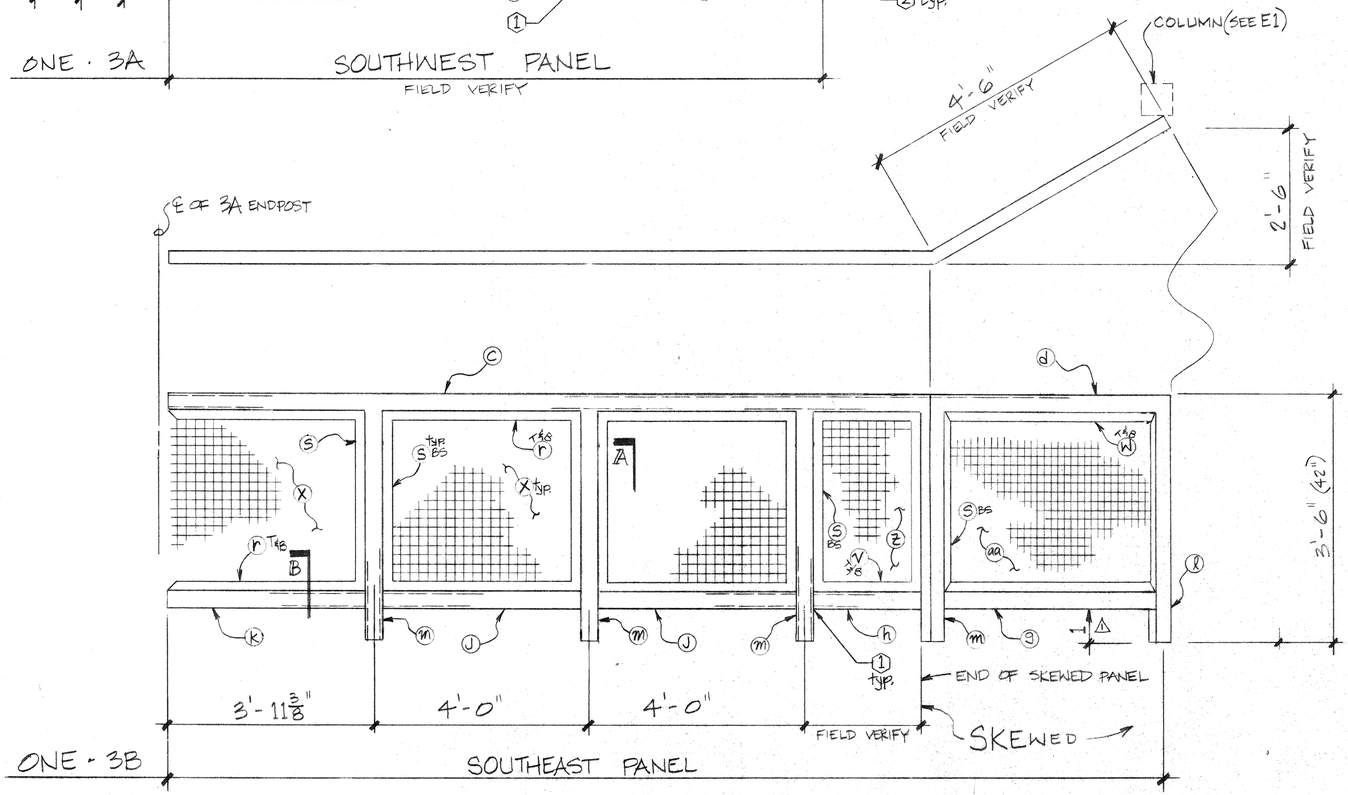

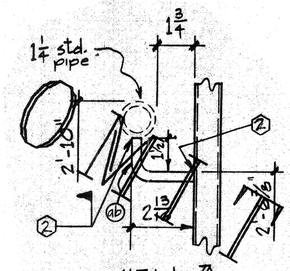

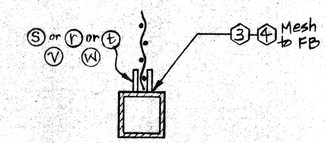

BILL OF MATERIALS

NO. OF PIECES	TITLE MARK	SHAPE	DESCRIPTION	FEET	INCHES	REMARKS
~~8~~	~~a~~	~~FB~~	~~1/4 × 2 ×~~		~~2 3/4~~	~~M2E~~
one	b	TS	1 1/4 × 1 1/4 × .120 ×	8	1 1/4	M1E
one	c	TS	do			M1E
one	d	TS	do			M1E
2	f	TS	do			ROLLED
one	g	TS	do			2SC
one	h	TS	do			M1E
4	j	TS	do	3	10 3/4	2SC
one	k	TS	do	3	10 3/4	2SC
2	l	TS	do	3	6	M1E
6	m	TS	do	3	4 3/4	2SC
one	p	TS	1 1/4 × 1 1/4 × .120 ×	3	5	M2E
20	r	FB	3/16 × 1 ×			M2E
32	s	FB	do			M2E
4	t	FB	do			ROLLED
4	v	FB	do			M2E
4	w	FB	3/16 × 1 ×			M2E
5	x	WM	1" × .135 × 3'-2 1/4	3	10 1/4	Welded Wire MESH
one	y	WM	1" × .135 ×			Welded Wire MESH
one	z	WM	1" × .135 ×			
one	aa	WM	1" × .135 ×			

FIELD BOLTS

GENERAL NOTES

HOLE SIZE U.N.O.

SHOP PAINT
ONE STANDARD PRIMER COAT

NOT TO SCALE

SPECIFICATIONS
AISC latest edition
Code of Standard Practice

Licensed L.A. Fabricator
Type I, Steel - #134

PLATE, ANGLE, CHANNEL, & BAR	A 36
STRUCTURAL TUBE	A 501
STRUCTURAL PIPE	A 53B
CONNECTION AND ANCHOR BOLTS	A 307
REINFORCING BARS	A 706
ELECTRODE	E 70T E 7018 E 6024

MILLER'S FAB & WELD
6100 Industrial Ave.
Riverside, Ca. 92504
(714) 359-3100
725 W. Fletcher
Orange, Ca. 92665
(714) 637-6426

PROJECT: BOATHOUSE - Fairmount Park
Riverside, Ca.

Lower Level Railing

CONTRACTOR: RSH

ARCHT.

ENG.

DRAW SSP

CHECK

ERECT

FOB

SHEET 3

JOB 7678

☒ NO EXCEPTION TAKEN ☐ MAKE CORRECTIONS NOTED
☐ REJECTED ☐ REVISE AND RESUBMIT ☐ SUBMIT SPECIFIED ITEM
Checking is only for general conformance with the design concept of the project and general compliance with the information given in the contract documents. Any action shown is subject to the requirements of the plans and specifications. Contractor is responsible for: dimensions which shall be confirmed and correlated at the job site; fabrication processes and techniques of construction; coordination of his work with that of all other trades; and the satisfactory performance of his work.
CITY OF RIVERSIDE
PARK & RECREATION DEPARTMENT
DATE 12/12/94 BY CE

RECEIVED
DEC - 2 1994
PARK & RECREATION PLANNING & DESIGN

WELD SCHEDULE		
1	1/8 V	GRIND SMOOTH
2	3/16 V	
3	1/8 V 1-6	
4	1/8 V	STITCH
5		

REV
1 PLAN REVIEW 29 NOV

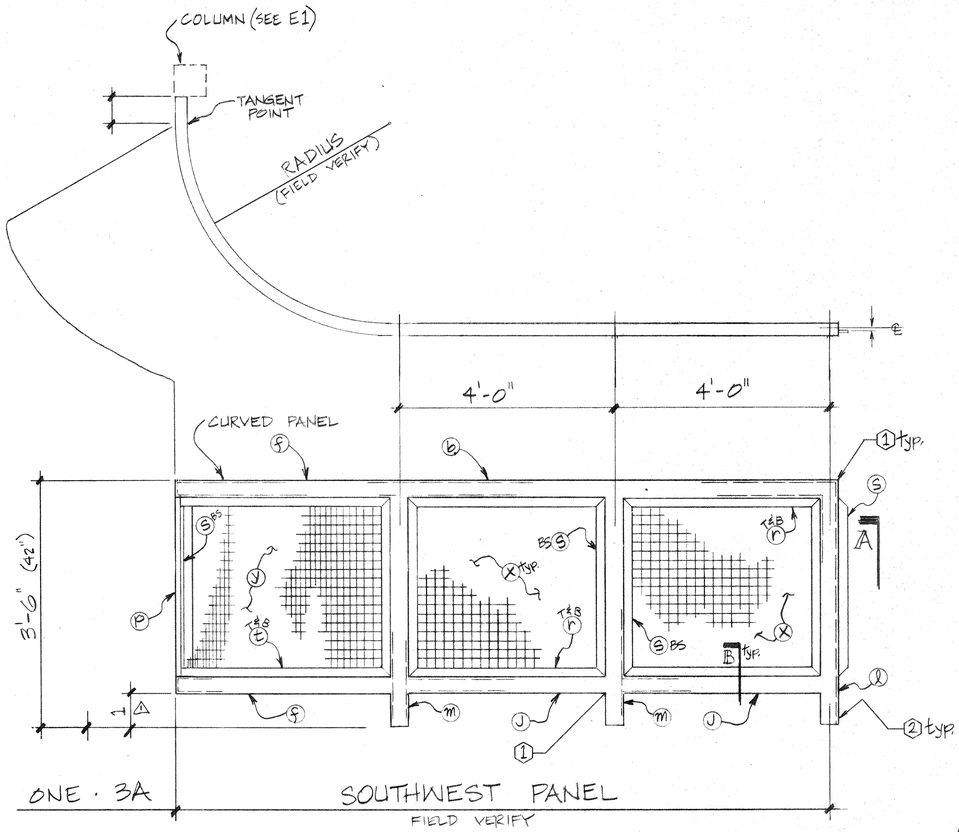

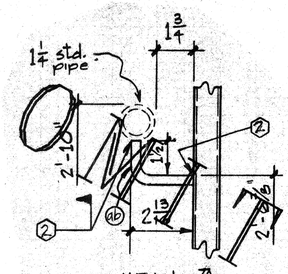

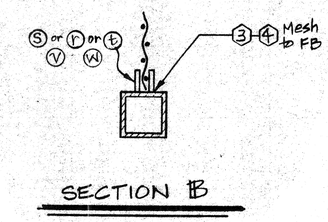

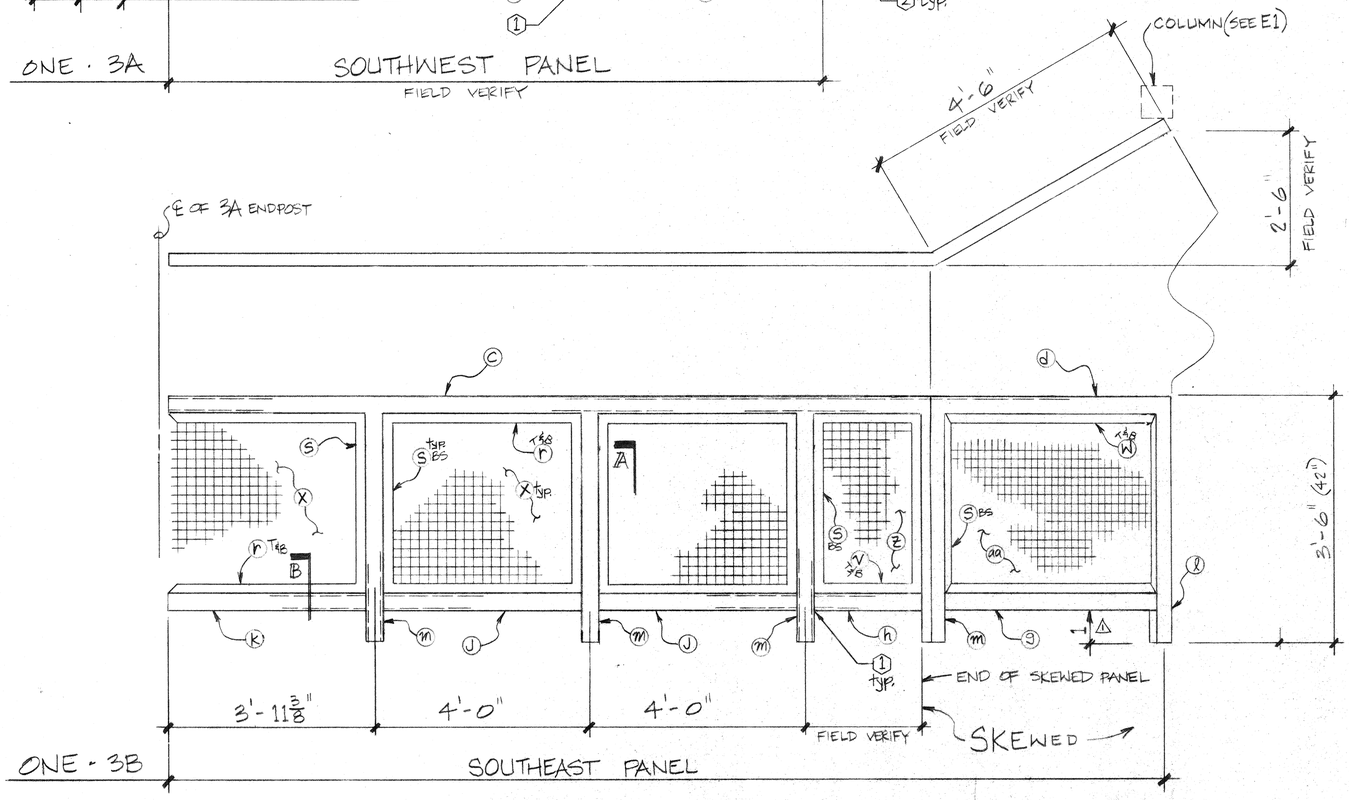

BILL OF MATERIALS

NO. OF PIECES	ITEM MARK	SHAPE	DESCRIPTION	FEET	INCHES	REMARKS
~~8~~	~~a~~	~~PL~~	~~¼ × 2 ×~~		~~5¾~~	~~W/2-R~~
one	b	TS	1¼ × 1¼ × .120 ×	8	1¼	M1E
one	c	TS	do			M1E
one	d	TS	do			M1E
2	f	TS	do			ROLLED
one	g	TS	do			2SC
one	h	TS	do			M1E
4	j	TS	do	3	10¾	2SC
one	k	TS	do	3	10¾	2SC
2	l	TS	do	3	6	M1E
6	m	TS	do	3	4¾	2SC
one	p	TS	1¼ × 1¼ × .120 ×	3	5	M2E
20	r	FB	3/16 × 1 ×			M2E
32	s	FB	do			M2E
4	t	FB	do			ROLLED
4	v	FB	do			M2E
4	w	FB	3/16 × 1 ×			M2E
5	x	WM	1" × .135 × 3'-2¼	3	10¼	Welded Wire MESH
one	y	WM	1" × .135 ×			Welded Wire MESH
one	z	WM	1" × .135 ×			
one	aa	WM	1" × .135 ×			

SEE SHT 2 △1

FIELD BOLTS

GENERAL NOTES

HOLE SIZE U.N.O.

SHOP PAINT
ONE STANDARD PRIMER COAT

NOT TO SCALE

SPECIFICATIONS
AISC latest edition
Code of Standard Practice

Licensed L.A. Fabricator
Type I, Steel - #134

PLATE, ANGLE, CHANNEL, & BAR	A 36
STRUCTURAL TUBE	A 501
STRUCTURAL PIPE	A 53B
CONNECTION AND ANCHOR BOLTS	A 307
REINFORCING BARS	A 706
ELECTRODE	E 70T E 7018 E 5024

MILLER'S FAB & WELD

6100 Industrial Ave.
Riverside, Ca. 92504
(714) 359-3100

725 W. Fletcher
Orange, Ca. 92665
(714) 637-6426

WELD SCHEDULE		
1	⌀ 1/8 V	GRIND SMOOTH
2	⌀ 3/16 V	
3	1/8 V 1-6	
4	1/8 V	STITCH

REV
PLAN REVIEW 29 NOV 1

RECEIVED
DEC 2 1994
PARK & RECREATION PLANNING & DESIGN

PROJECT: BOATHOUSE - Fairmount Park
Riverside, Ca.

Lower Level Railing

CONTRACTOR: RSH

ARCHT.

ENG.

DRAW SSP

CHECK

ERECT

FOB

SHEET 3

JOB 7678

☒ NO EXCEPTION TAKEN ☐ MAKE CORRECTIONS NOTED
☐ REVISE AND RESUBMIT
☐ REJECTED ☐ SUBMIT SPECIFIED ITEM

Checking is only for general conformance with the design concept of the project and general compliance with the information given in the contract documents. Any action shown is subject to the requirements of the plans and specifications. Contractor is responsible for: dimensions which shall be confirmed and correlated at the job site; fabrication processes and techniques of construction; coordination of his work with that of all other trades; and the satisfactory performance of his work.

CITY OF RIVERSIDE
PARK & RECREATION DEPARTMENT
DATE 12/12/94 BY [illegible]

HANDRAIL SHOP DRAWINGS

ALL DIMENSIONS TO BE VERIFIED IN FIELD

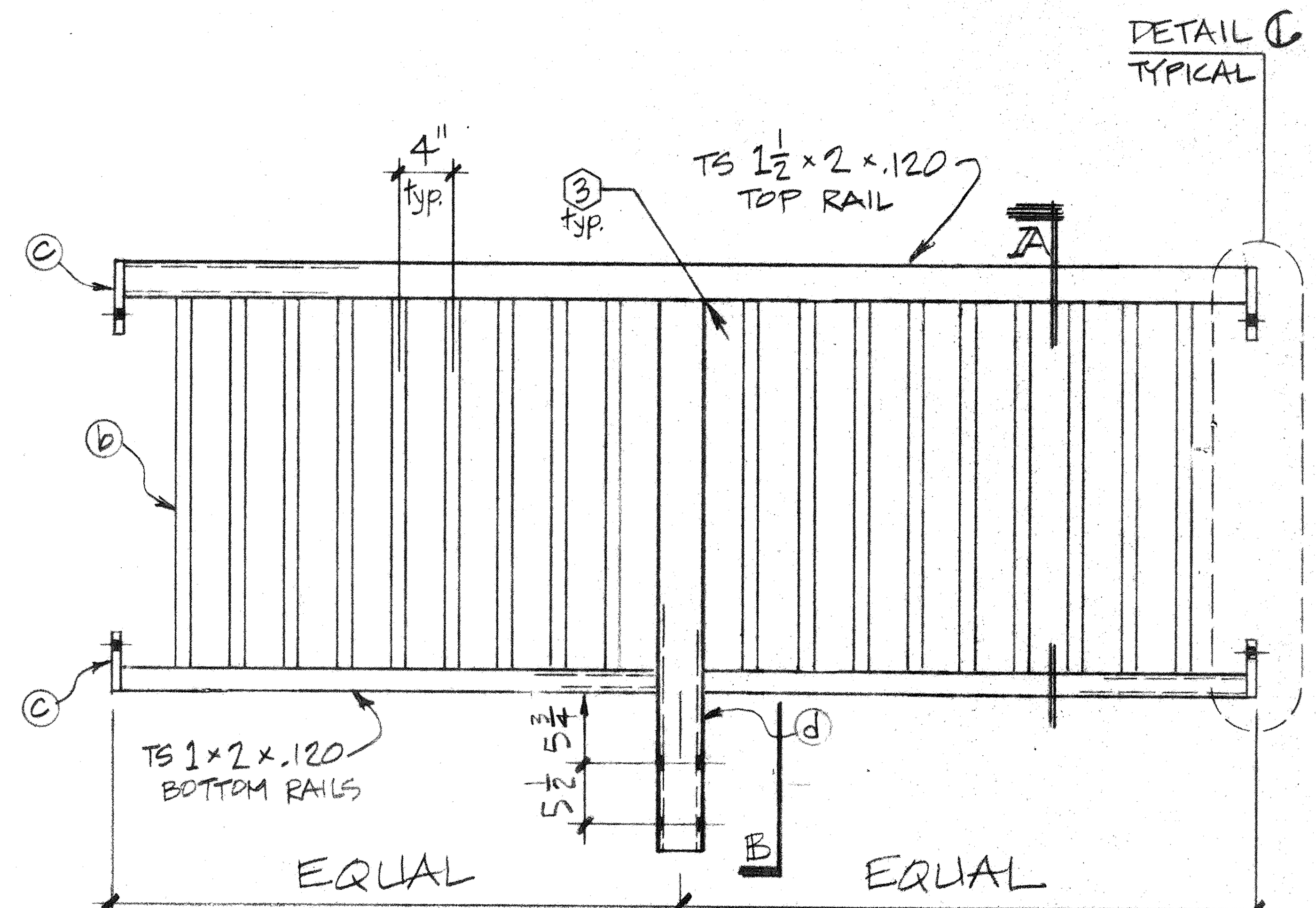

ONE - 5A	W.I. PANEL @ 2ND FLOOR DECK
ONE - 5B	W.I. PANEL @ 2ND FLOOR DECK

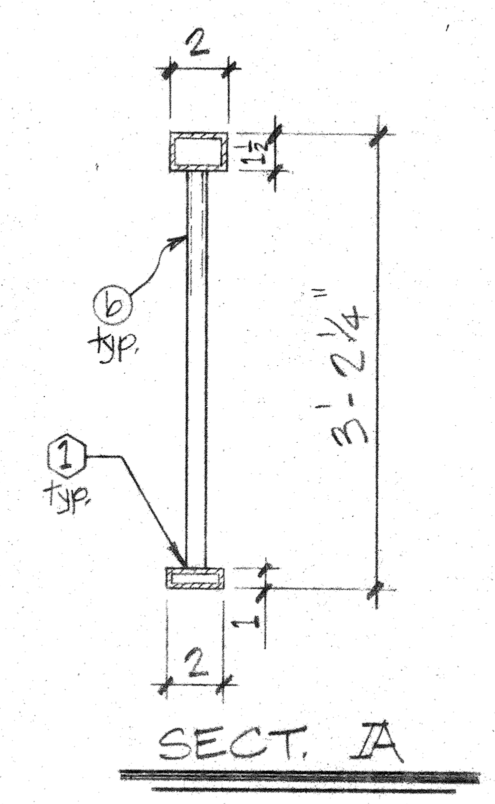

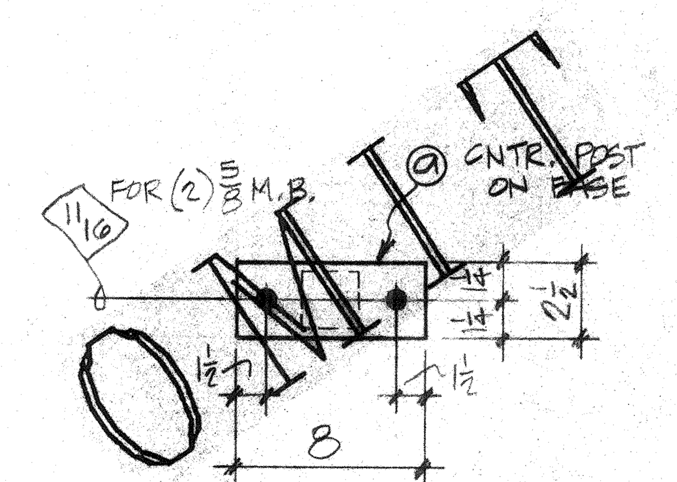

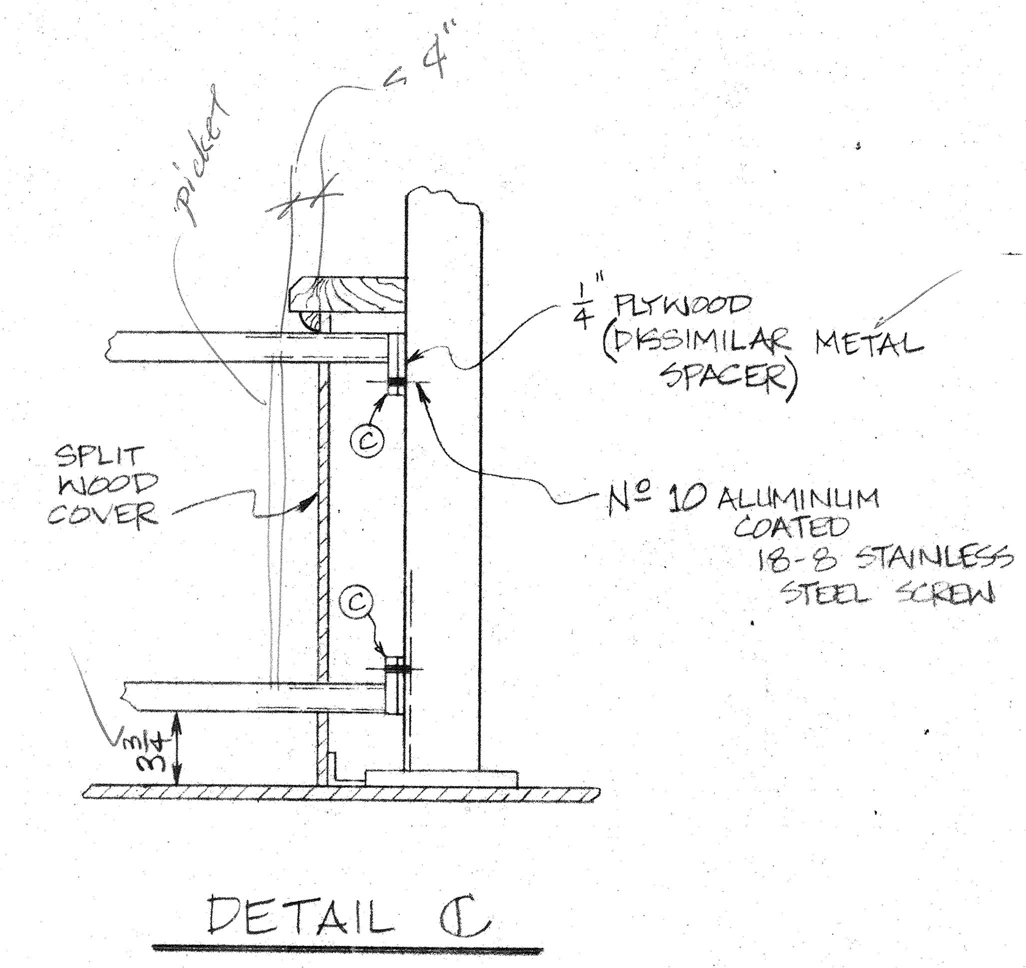

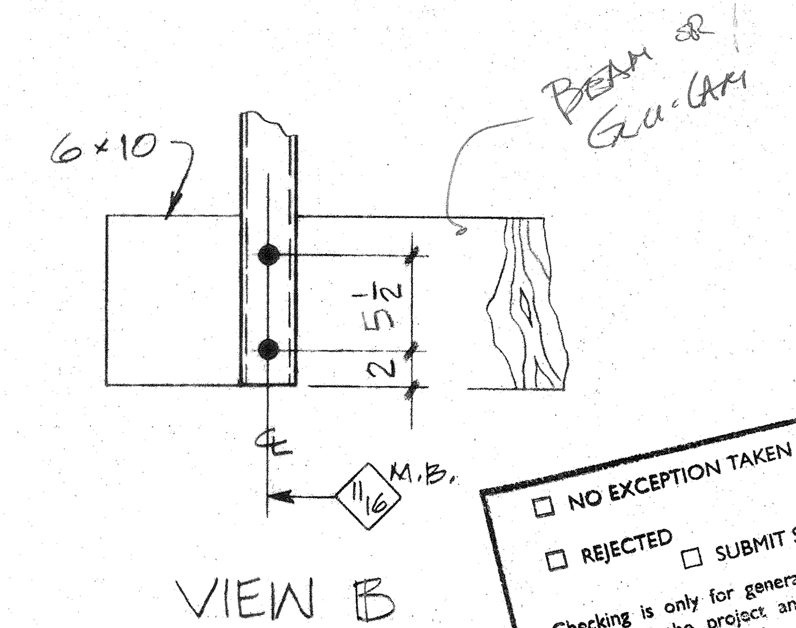

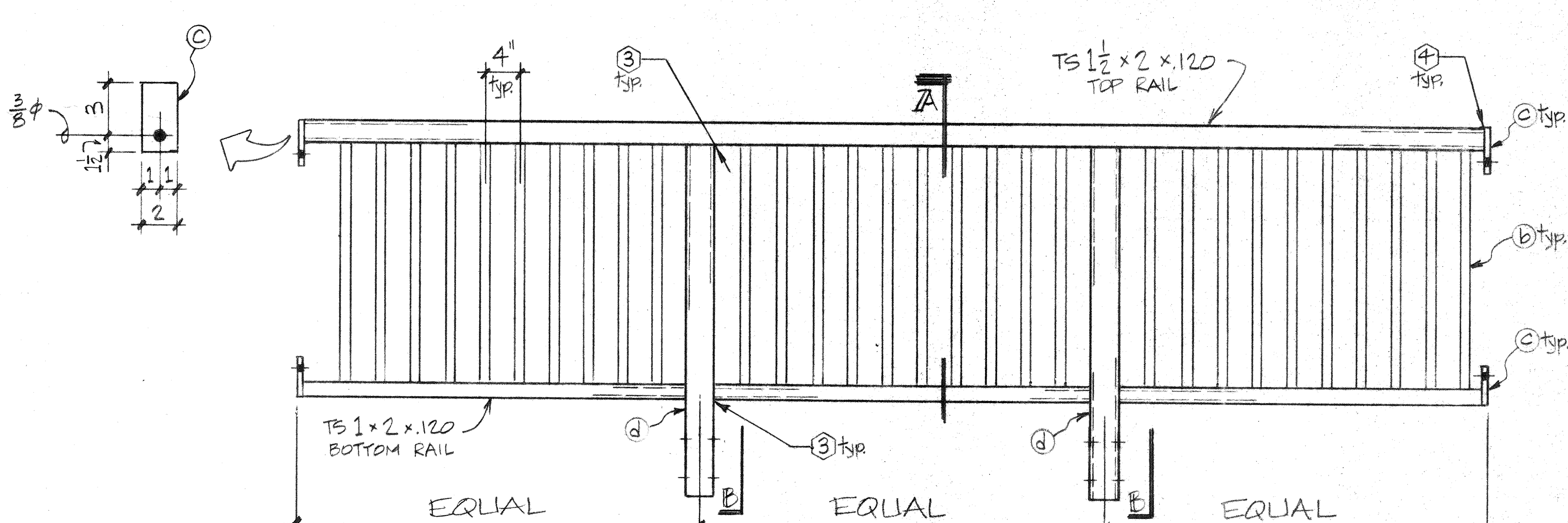

ONE - 5C	W.I. PANEL @ 2ND FLOOR DECK
ONE - 5D	" do "
ONE - 5F	" do "
ONE - 5G	" do "
ONE - 5H	W.I. PANEL @ 2ND FLOOR DECK

☐ NO EXCEPTION TAKEN ☒ MAKE CORRECTIONS NOTED
☐ REJECTED ☐ REVISE AND RESUBMIT
☐ SUBMIT SPECIFIED ITEM

Checking is only for general conformance with the design concept of the project and general compliance with the information given in the contract documents. Any action shown is subject to the requirements of the plans and specifications. Contractor is responsible for: dimensions which shall be confirmed and correlated at the job site; fabrication processes and techniques of construction; coordination of his work with that of all other trades; and the satisfactory performance of his work.

CITY OF RIVERSIDE
PARK & RECREATION DEPARTMENT
DATE 12/12/94 BY [signature]

RECEIVED
DEC - 2 1994
PARK & RECREATION PLANNING & DESIGN

BILL OF MATERIALS

NO. OF PIECES	ITEM MARK	SHAPE	DESCRIPTION	FEET	INCHES	REMARKS
~~12~~	~~a~~	~~PL~~	~~1/4 × 2 1/2 ×~~		~~8~~	~~w/2 ϕ~~
± 400	b	TS	3/4 × 3/4 × .065 ×	2	11 3/4	2SC
28	c	PL	1/4 × 2 ×		4 1/2	w/one ϕ
12	d	TS	2 × 2 × .120 ×	3	4 1/4	2SC
ONE	5A	TS	1 1/2 × 2 × .120 ×			2SC
2	5A	TS	1 × 2 × .120 ×			2SC
ONE	5B	TS	1 1/2 × 2 × .120 ×			2SC
2	5B	TS	1 × 2 × .120 ×			2SC
ONE	5C	TS	1 1/2 × 2 × .120 ×			2SC
3	5C	TS	1 × 2 × .120 ×			2SC
ONE	5D	TS	1 1/2 × 2 × .120 ×			2SC
3	5D	TS	1 × 2 × .120 ×			2SC
ONE	5F	TS	1 1/2 × 2 × .120 ×			2SC
3	5F	TS	1 × 2 × .120 ×			2SC
ONE	5G	TS	1 1/2 × 2 × .120 ×			2SC
3	5G	TS	1 × 2 × .120 ×			2SC
ONE	5H	TS	1 1/2 × 2 × .120 ×			2SC
3	5H	TS	1 × 2 × .120 ×			2SC
4		ϕ	5/8 THR'D ROD ×	1	6	W/8 NUTS
20		ϕ	5/8 THR'D ROD ×	1	3	W/40 NUTS
28		ϕ	5/16 LAG BOLT ×		1 1/2	
24		FW	FLAT WASHERS 5/8			

FIELD BOLTS

GENERAL NOTES

HOLE SIZE U.N.O.	PLATE, ANGLE, CHANNEL, & BAR --- A 36
SHOP PAINT ONE STANDARD PRIMER COAT	STRUCTURAL TUBE --- A 501
NOT TO SCALE	STRUCTURAL PIPE --- A 53B
SPECIFICATIONS AISC latest edition Code of Standard Practice	CONNECTION AND ANCHOR BOLTS --- A 307
Licensed L.A. Fabricator Type I, Steel - #134	REINFORCING BARS --- A 706
	ELECTRODE --- E 70T, E 7018, E 7024

WELD SCHEDULE

1	1/8 V	
2	3/16 V	
3	1/8 / 1/8 ▷ & 1/8 / 1/8 ⌈⌈	GRIND SMOOTH
4	3/16 ⌷	GRIND FLAT
⬡		

KEY

MILLER'S FAB & WELD

5400 Industrial Ave.
Riverside, Ca. 92504
(714) 359-3100

725 W. Fletcher
Orange, Ca. 92665
(714) 637-6426

PROJECT: BOATHOUSE @ FAIRMOUNT PARK, RIVERSIDE

2ND FLOOR DECK RAILING

CONTRACTOR: RSH

ARCHT.

ENG.

DRAW SSP 26 SEPT 94 | ERECT | SHEET 5 | JOB 7678

CHECK.

HANDRAIL SHOP DRAWINGS

ALL DIMENSIONS TO BE VERIFIED IN FIELD

APPROVER: PLEASE NOTE 4" PICKET SPACING IS ℄ to ℄ ∴ DIM. BETWEEN PICKTS IS 3½"

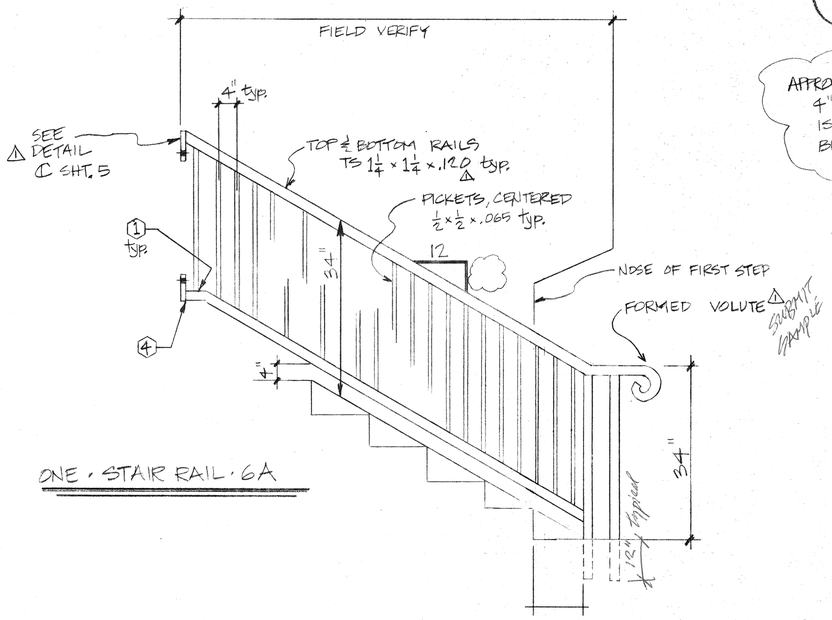

ONE · STAIR RAIL · 6A

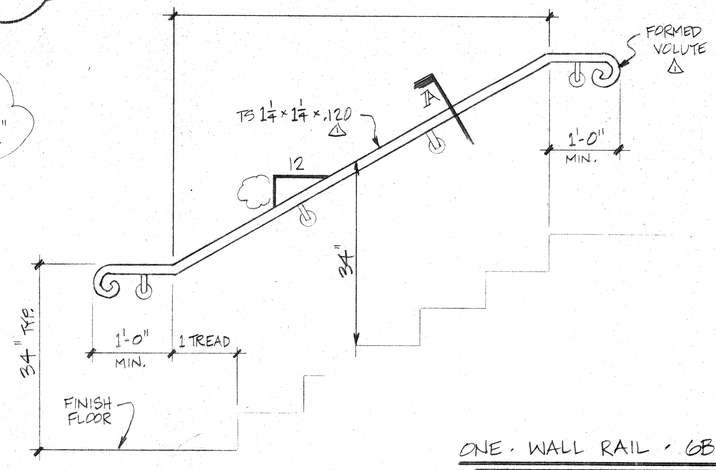

ONE · WALL RAIL · 6B AS SHOWN

ONE · WALL RAIL · 6C OPPOSITE (SIM.)

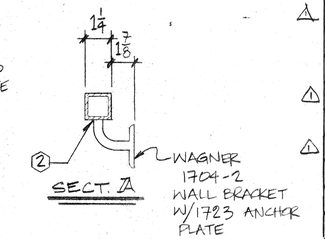

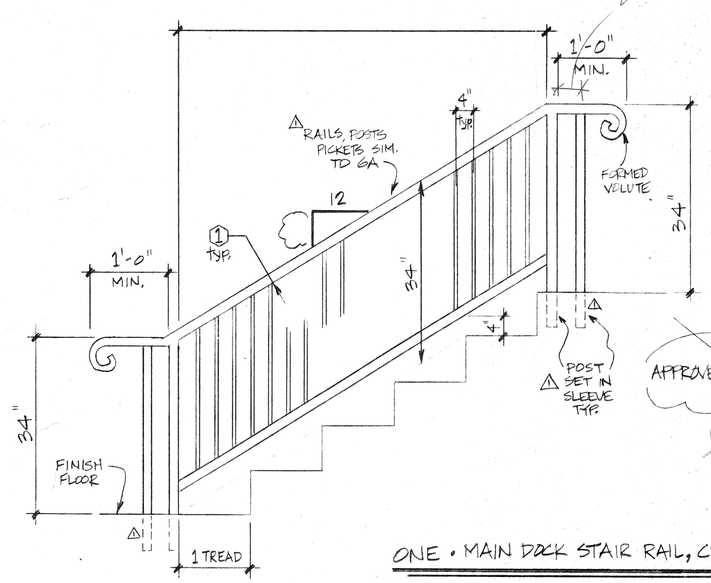

APPROVER: HOW WOULD YOU LIKE POSTS TO BE ANCHORED? SLEEVES? EPOXY BOLTS? PLATES?

ONE · MAIN DOCK STAIR RAIL, CENTER · 6D AS SHOWN

ONE · MAIN DOCK STAIR RAIL, EAST · 6E W/ OFFSET

ONE · MAIN DOCK STAIR RAIL, WEST · 6G W/ OFFSET

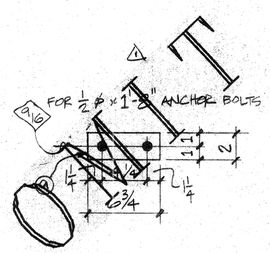

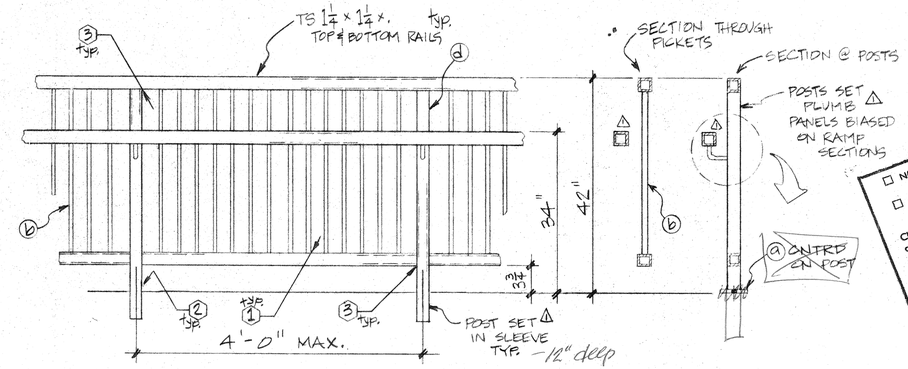

TYPICAL HANDICAPPED RAMP RAIL · 6H

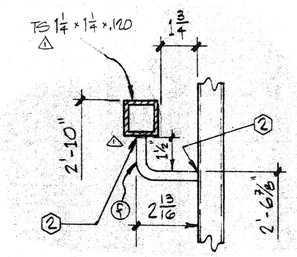

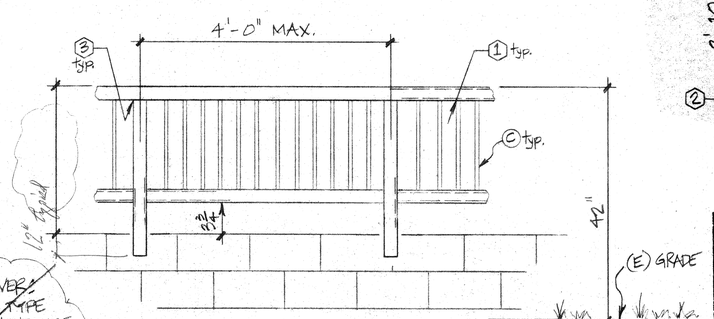

APPROVER: WHAT TYPE OF ANCHORAGE IS REQUIRED?

TYP. RETAINING WALL RAIL · 6J

RECEIVED DEC - 2 1994 PARK & RECREATION PLANNING & DESIGN

BILL OF MATERIALS

NO. OF PIECES	TYPE MARK	SHAPE	DESCRIPTION	FEET	INCHES	REMARKS
	a	~~PL~~	~~¼ × 2 ×~~		~~6¾~~	~~½ ø~~
	b	TS	½ × ½ × .065 ×	2	11¾	2SC
	c	TS	½ × ½ × .065 ×			2SC
	d	TS	1¼ × 1¼ × .120 ×	3	4½	2SC
		TS	1¼ × 1¼ × .120			HANDRAIL
	f	Pipe	½" ×		3¾	BENT

NO EXCEPTION TAKEN/MAKE CORRECTIONS NOTED
REVISE AND RESUBMIT
REJECTED
SUBMIT SPECIFIED ITEM
Checking is only for general conformance with the design concept of the project and general compliance with the information given in the contract documents. Any action shown is subject to the requirements of the plans and specifications. Contractor is responsible for: dimensions which shall be confirmed and correlated at the job site; fabrication processes and techniques of construction; coordination of his work with that of all other trades; and the satisfactory performance of his work.
CITY OF RIVERSIDE
PARK & RECREATION DEPARTMENT
DATE 12/11/94 BY

FIELD BOLTS

GENERAL NOTES

HOLE SIZE U.N.O.

SEE PAINT ONE STANDARD PRIMER COAT

NOT TO SCALE

SPECIFICATIONS
AISC latest edition
Code of Standard Practice

Licensed L.A. Fabricator
Type I, Steel - #136

PLATE, ANGLE, CHANNEL, & BAR	A 36
STRUCTURAL TUBE	A 501
STRUCTURAL PIPE	A 53B
CONNECTION AND ANCHOR BOLTS	A 307
REINFORCING BARS	A 706
ELECTRODE	E 70T
	E 7018
	ER 1024

MILLER'S FAB & WELD
3500 Industrial Ave.
Riverside, Ca. 92506
(714) 359-3400
725 W. Fletcher
Orange, Ca. 92665
(714) 637-6426

PROJECT: BOATHOUSE @ FAIRMOUNT PARK
RIVERSIDE, CA.

W.I. RAIL — CONTRACTOR: RSH

ARCH. — ENG.

DRAWN SSP — DATE 27 SEPT 94 — ERECT ~~FOR~~ — SHEET 6 — JOB 7678

CHECK

WELD SCHEDULE		
1	⌀ 1/8 ▽	
2	⌀ 3/16 ▽	
3	⌀ 1/8 ▽	GRIND SMOOTH
4	⌀ 3/16 ▷	
⬡		

PLAN REVIEW 30 NOV 1994

ALL DIMENSIONS TO BE VERIFIED IN FIELD

APPROVER: PLEASE NOTE 4" PICKET SPACING IS ℄ to ℄ ∴ DIM. BETWEEN PCKTS IS 3½"

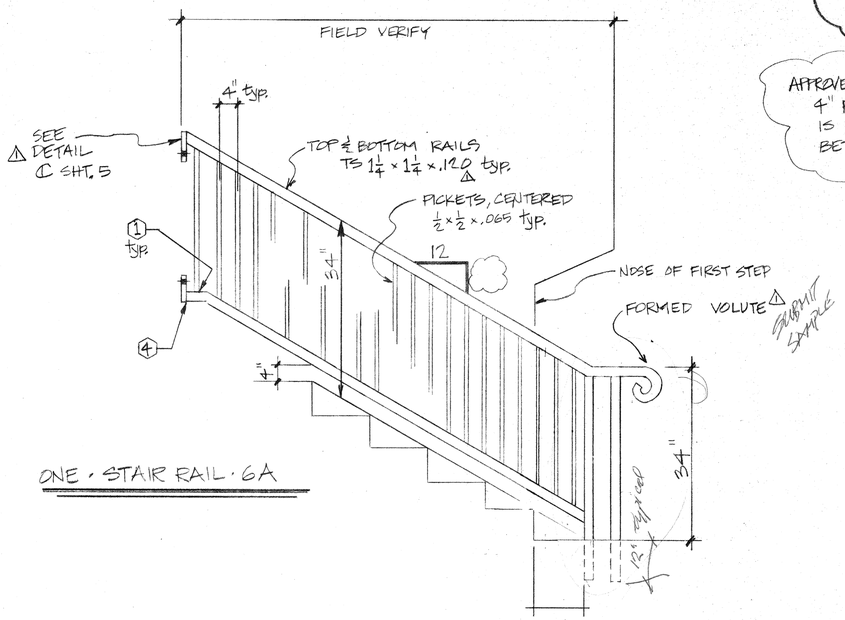

ONE · STAIR RAIL · 6A

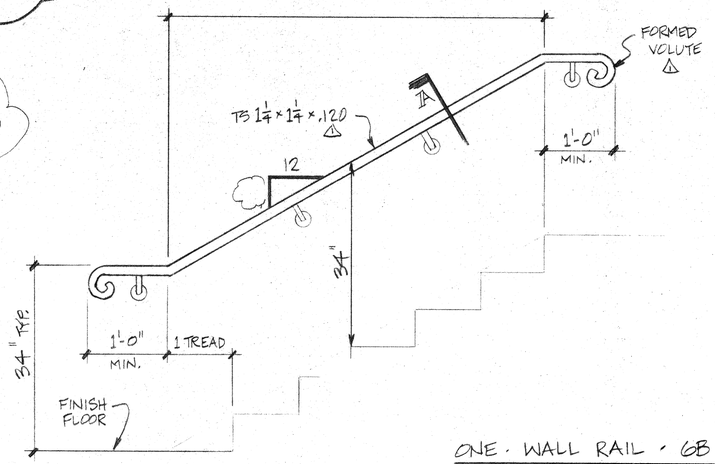

ONE · WALL RAIL · 6B AS SHOWN

ONE · WALL RAIL · 6C OPPOSITE (SIM.)

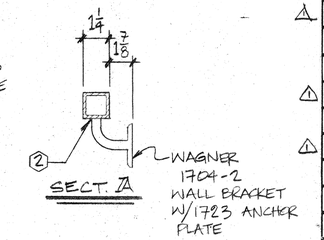

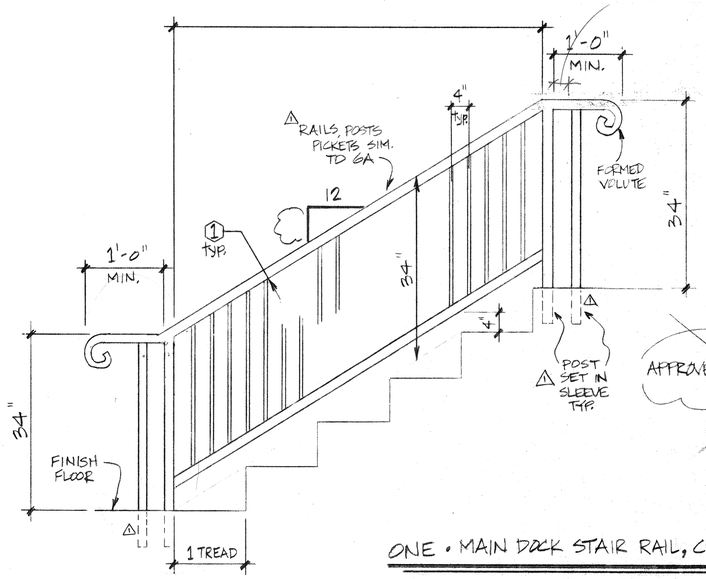

APPROVER: HOW WOULD YOU LIKE POSTS TO BE ANCHORED? SLEEVES? EPOXY BOLTS? PLATES?

ONE · MAIN DOCK STAIR RAIL, CENTER · 6D AS SHOWN

ONE · MAIN DOCK STAIR RAIL, EAST · 6F W/ OFFSET

ONE · MAIN DOCK STAIR RAIL, WEST · 6G W/ OFFSET

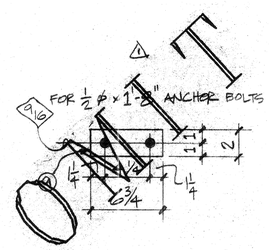

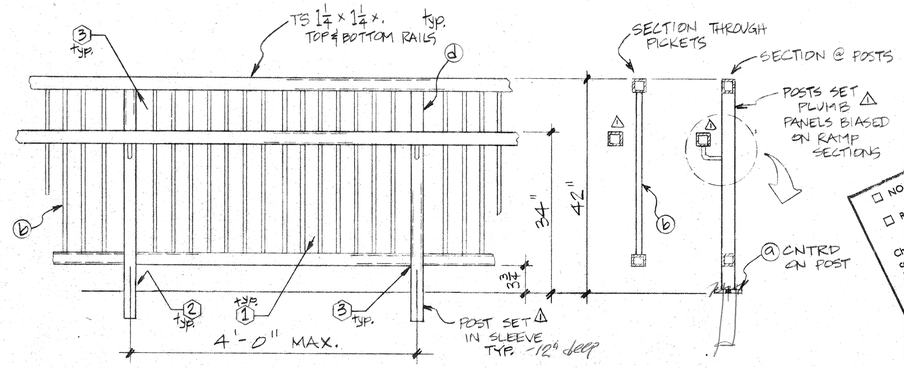

TYPICAL HANDICAPPED RAMP RAIL · 6H

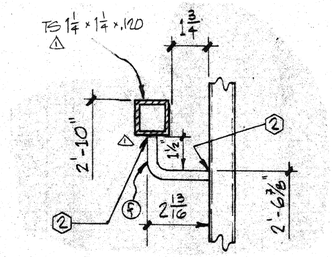

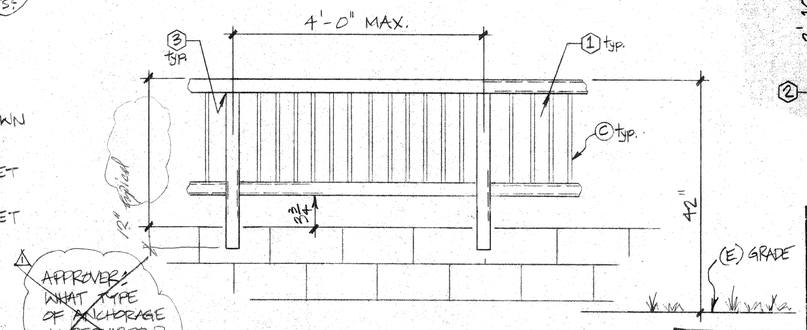

APPROVER: WHAT TYPE OF ANCHORAGE IS REQUIRED?

TYP. RETAINING WALL RAIL · 6J

BILL OF MATERIALS

NO. OF PIECES	TYPE MAT'L	SHAPE	DESCRIPTION	FEET	INCHES	REMARKS
	a	~~PL~~	~~¼ × 2 ×~~		~~6¾~~	~~w/2 ø~~
	b	TS	½ × ½ × .065 ×	2	11¾	2SC
	c	TS	½ × ½ × .065 ×			2SC
	d	TS	1¼ × 1¼ × .120 ×	3	4½	2SC
		TS	1¼ × 1¼ × .120			HANDRAIL
	f	Rod	½" ×		3¾	BENT

NO EXCEPTION TAKEN / MAKE CORRECTIONS NOTED / REVISE AND RESUBMIT / REJECTED / SUBMIT SPECIFIED ITEM

Checking is only for general conformance with the design concept of the project and general compliance with the information given in the contract documents. Any action shown is subject to the requirements of the plans and specifications. Contractor is responsible for confirming and correlating all quantities and dimensions, fabrication processes and techniques of construction, installation and coordination of his work with that of all other trades and the satisfactory performance of his work.

CITY OF RIVERSIDE PARK & RECREATION DEPARTMENT DATE 12/11/94 BY

FIELD BOLTS

GENERAL NOTES

HOLE SIZE U.N.O.

SPCC PAINT (ONE STANDARD PRIMER COAT)

NOT TO SCALE

SPECIFICATIONS
AISC latest edition
Code of Standard Practice

Licensed L.A. Fabricator
Type I, Steel - #134

PLATE, ANGLE, CHANNEL, & BAR	A 36
STRUCTURAL TUBE	A 501
STRUCTURAL PIPE	A 53B
CONNECTION AND ANCHOR BOLTS	A 307
REINFORCING BARS	A 706
ELECTRODE	E 70T
	E 7018
	E 6024

MILLER'S FAB & WELD
6500 Industrial Ave.
Riverside, Ca. 92504
(714) 359-3400
725 W. Fletcher
Orange, Ca. 92665
(714) 637-6426

PROJECT: BOATHOUSE @ FAIRMOUNT PARK
RIVERSIDE, CA.

W.I. RAIL — CONTRACTOR: RSH

ARCH. — ENG.

DRAWN SSP 27 SEPT 94 — ERECT — SHEET 6 — JOB 7678

CHECK. — DOB

RECEIVED DEC - 2 1994 PARK & RECREATION PLANNING & DESIGN

WELD SCHEDULE		
1	⌀ 1/8 V	
2	⌀ 3/16 V	
3	⌀ 1/8 V	GRIND SMOOTH
4	⌀ 3/16 ⊓	
⬡		

PLAN REVIEW 30 NOV 1

CABINETRY SHOP DRAWINGS

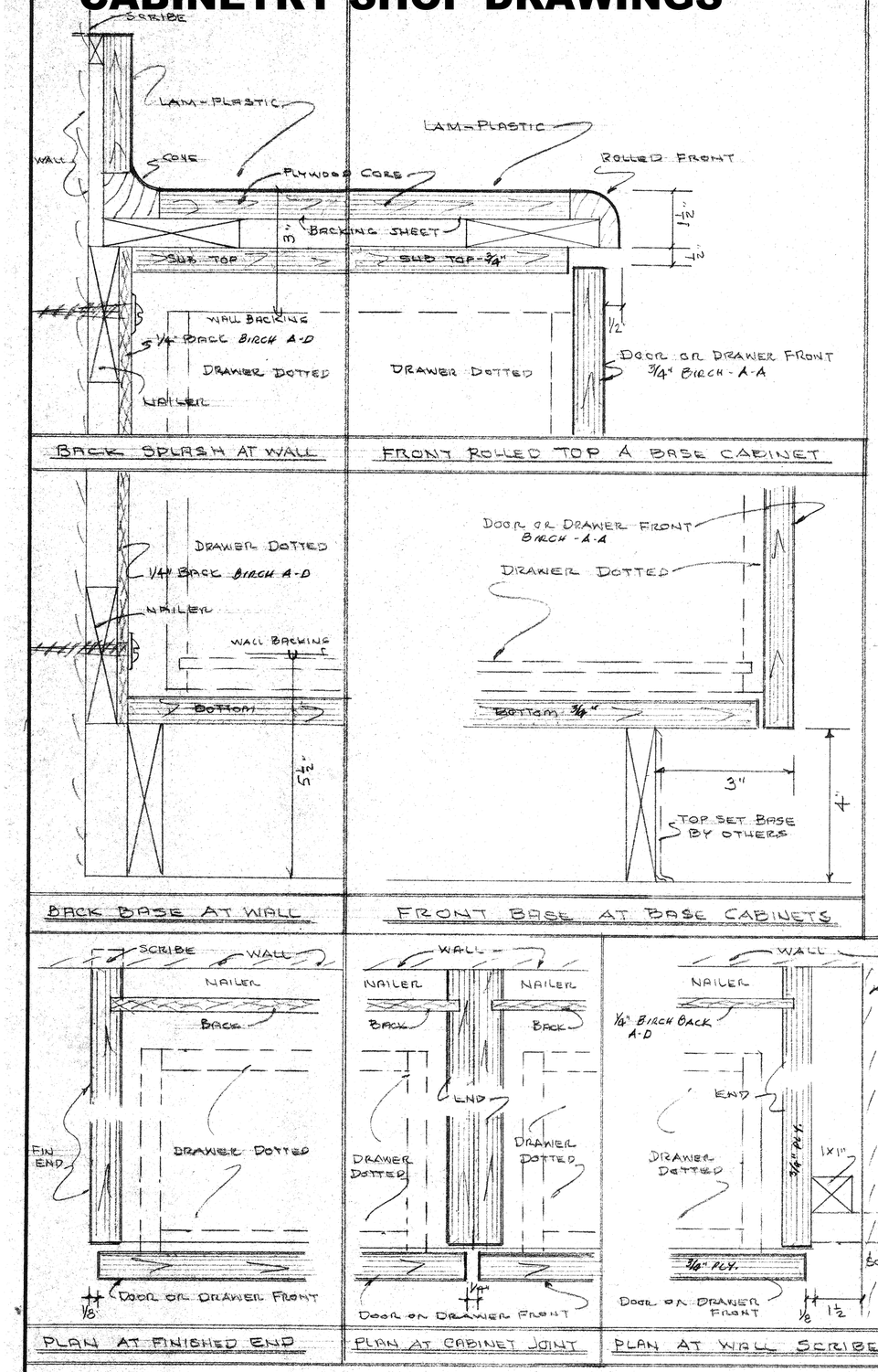

CABINET EXTERIOR / INTERIOR
W.I.C. CUSTOM GRADE - REDBIRCH PLYWOOD A-A, INT. / PA
SHELVES - 3/4" BIRCH PLY.
DRAWERS - 1/2" BIRCH PLY. WITH VENEER EDGE BAND AT FRONT, SIDES & BACK
1/4" BIRCH (A-D) PLYWOOD
EDGE BAND - BIRCH VENEER APPLIED BY HOT-PRESS MACHINE METHOD.

GENERAL SPECIFICATIONS

CABINET EXTERIOR: ALL EXPOSED VERTICAL SURFACE'S SHALL BE 1/32" THERMO PLASTIC LAMINATED TO 11/16 OR 1" THICK 45LB PARTICLEBOARD CORE MATERIAL. PLASTIC SHALL BE APPLIED UNDER PRESSURE WITH COLD SETTING WATERPROOF GLUE. SELF EDGE BANDING APPLIED BY HOT-PRESS MACHINE METHOD.

CABINET INTERIOR: WITH DOORS TO BE WHITE MELAMINE INTERIOR. OPEN INTERIORS TO BE LAM-PLASTIC SAME AS ABOVE.

DRAWERS: SIDES, BACK AND INSIDE FRONT TO BE 1/2" THICK WHITE MELAMINE. BOTTOM TO BE 1/4" THICK WHITE MELAMINE. DRAWERS TO BE ON METAL SIDE GUIDES.

ADJUSTABLE SHELVES: ON K.V #255 STANDARD LET-IN FLUSH [redacted]. K.V #256 SHELF CLIPS

COUNTER TOPS: SURFACE MATERIAL SHALL BE POST FORMING. CORE TO BE 3/4" D.F. PLYWOOD BACKING SHEET TO BE .020 GATER PLY. FACE TO HAVE 1 1/2" SELF EDGE. BACK SPLASH TO BE COVED.

CONSTRUCTION: W.I.C. CUSTOM GRADE CABINET - STYLE-A FRAMELESS - FLUSH OVERLAY
W.I.C. CUSTOM GRADE TOPS
OK

INSTALLATION: W.I.C. SECTION 26

HARDWARE: FINISH U.S 26D DULL CHROME

16 PAIR HINGES BLUM CONCEALED S.C. - 170 DEG. SWING
20 PULL WIRE PULLS - 3 1/2" CTOC
4 PAIR DRAWER GUIDES BLUM #230-M 100 LB (SELF CLOSING)
64 SHELF CLIPS K.V # 256 FOR K.V # 255 STANDARD
1 SET K.V # 1092 ASSEM GLASS DOOR TRACK
1 LOCK K.V # 965 FOR ENTRY DISPLAY CABINET.
ALL DOORS TO HAVE LOCKS - OLYMPUS #100DR U26D

NO EXCEPTION TAKEN ☐ MAKE CORRECTIONS NOTED
☐ REVISE AND RESUBMIT
☐ REJECTED ☐ SUBMIT SPECIFIED ITEM

Checking is only for general conformance with the design concept of the project and general compliance with the information given in the contract documents. Any action shown is subject to the requirements of the plans and specifications. Contractor is responsible for: dimensions which shall be confirmed and correlated at the job site; fabrication processes and techniques of construction; coordination of his work with that of all other trades; and the satisfactory performance of his work.

CITY OF RIVERSIDE
PARK & RECREATION DEPARTMENT
DATE 11/28/94 BY

RECEIVED
OCT 31 1994
PARK & RECREATION PLANNING & DESIGN

NO	DATE	BY	REMARKS
1	10-26-94	DL	FOR RESUBMITTAL

DRAWN	MITCH
DATE	7-27-94
SCALE	1/2 = FULL SIZE
JOB NO	#9429

LOZANO CASEWORKS, INC.
2245 VIA CERRO #A RIVERSIDE, CALIFORNIA 92509
PHONE NO. 909 782-8501 FAX NO. 909-782-8773
STATE LICENSE 673661

ARCHITECT
BOB STEWART AND COLE & FRICK
4195 CHESTNUT
RIVERSIDE, CALIF. 92501

CONTRACTOR
R.S.H CONSTRUCTION
10392 HILLSIDE ROAD
ALTA LOMA, CALIF. 91701

JOB NAME
FAIRMOUNT PARK BOATHOUSE
2707 LOCUST STREET
RIVERSIDE, CALIF.

SHEET 1 OF 5

CABINETRY SHOP DRAWINGS

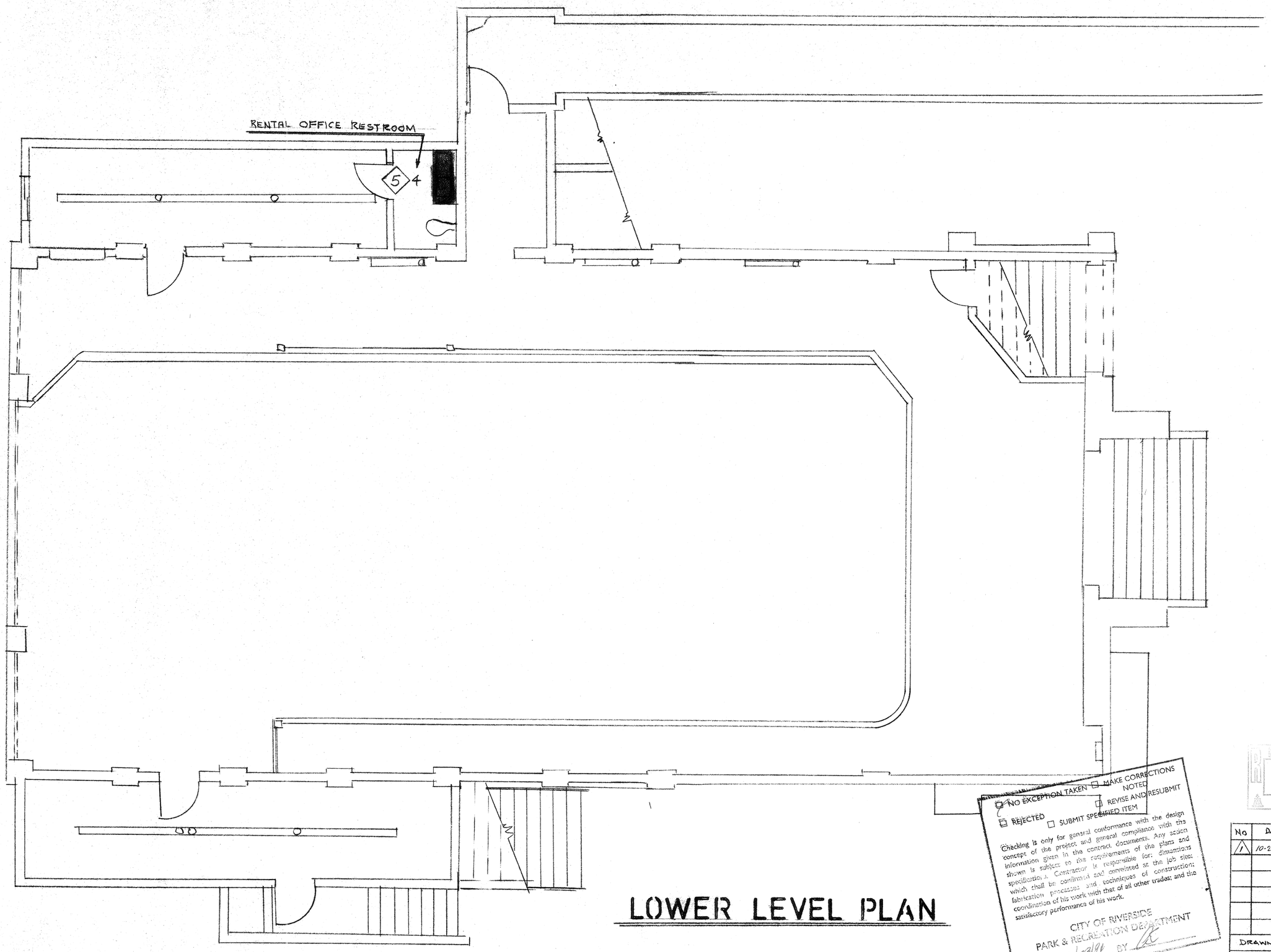

LOWER LEVEL PLAN

NO EXCEPTION TAKEN ☐ MAKE CORRECTIONS NOTED
☐ REVISE AND RESUBMIT
☐ REJECTED ☐ SUBMIT SPECIFIED ITEM

Checking is only for general conformance with the design concept of the project and general compliance with the information given in the contract documents. Any action shown is subject to the requirements of the plans and specifications. Contractor is responsible for: dimensions which shall be confirmed and correlated at the job site; fabrication processes and techniques of construction; coordination of his work with that of all other trades; and the satisfactory performance of his work.

CITY OF RIVERSIDE
PARK & RECREATION DEPARTMENT
DATE 11/29/94 BY

RECEIVED
OCT 31 1994
PARK & RECREATION PLANNING & DESIGN

No	DATE	BY	REMARKS
1	10-26-94	OL	

DRAWN	MITCH
DATE	7-27-94
SCALE	1/4-1'-0
JOB NO	#9429

LOZANO CASEWORKS, INC.
2245 VIA CERRO #A RIVERSIDE, CALIFORNIA 92509
PHONE NO. 909 782-8501 FAX NO. 909-782-8773
STATE LICENSE 673661

ARCHITECT
BOB STEWART AND COLE & FRICK
4195 CHESTNUT
RIVERSIDE, CALIF. 92501

CONTRACTOR
R.S.N. CONSTRUCTION
10392 HILLSIDE ROAD
ALTA LOMA, CALIF. 91701

JOB NAME
FAIRMOUNT PARK BOATHOUSE
2709 LOCUST STREET
RIVERSIDE, CALIF.

SHEET 2 OF 5

CABINETRY SHOP DRAWINGS

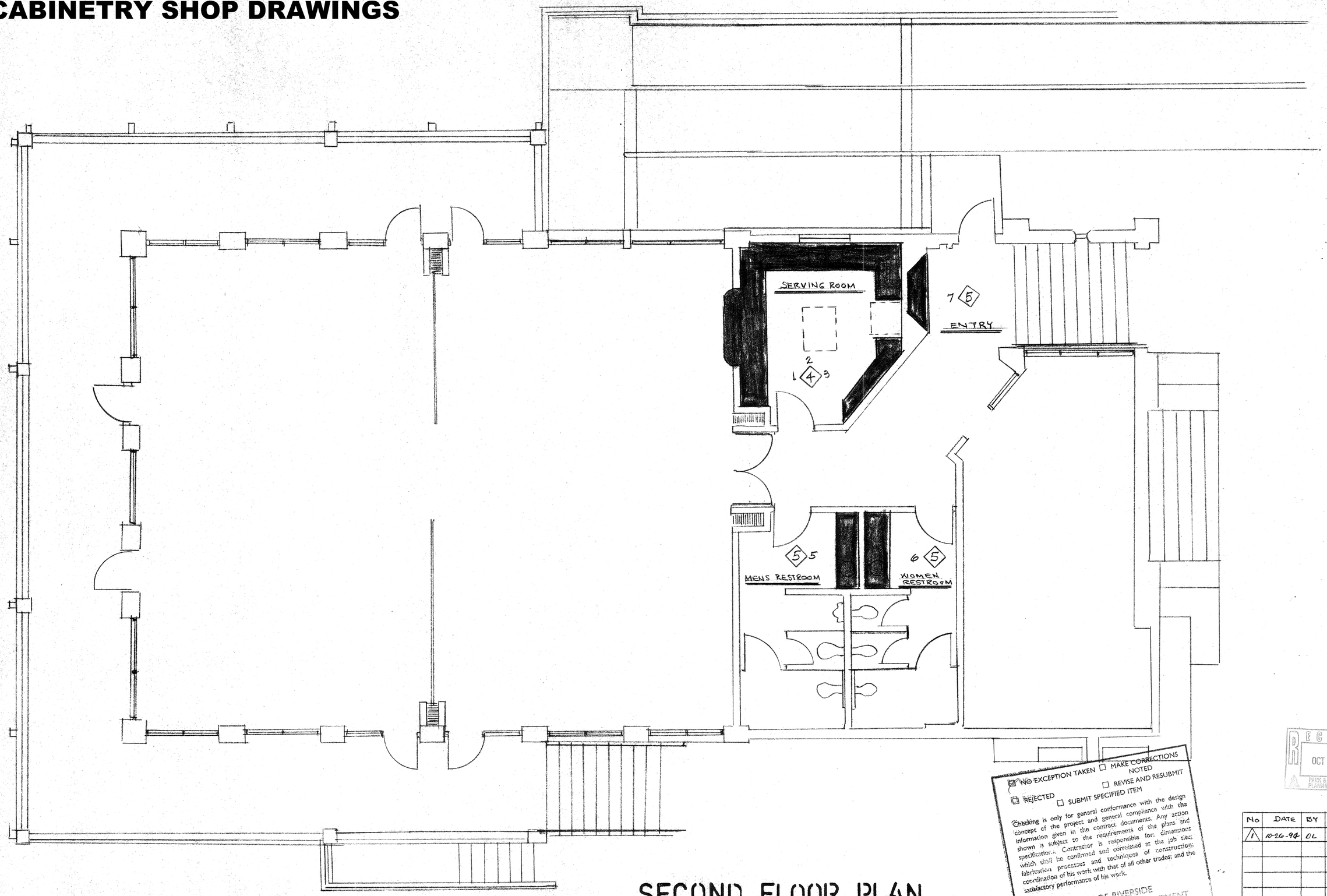

SECOND FLOOR PLAN

NO EXCEPTION TAKEN ☐ MAKE CORRECTIONS NOTED
☐ REVISE AND RESUBMIT
☐ REJECTED ☐ SUBMIT SPECIFIED ITEM

Checking is only for general conformance with the design concept of the project and general compliance with the information given in the contract documents. Any action shown is subject to the requirements of the plans and specifications. Contractor is responsible for: dimensions which shall be confirmed and correlated at the job site; fabrication processes and techniques of construction; coordination of his work with that of all other trades; and the satisfactory performance of his work.

CITY OF RIVERSIDE
PARK & RECREATION DEPARTMENT
DATE 11/22/94 BY

RECEIVED
OCT 31 1994
PARK & RECREATION PLANNING & DESIGN

No	DATE	BY	REMARKS
1	10-26-94	DL	

DRAWN	MITCH
DATE	7-27-94
SCALE	1/4=1'-0
JOB NO	# 9429

LOZANO CASEWORKS, INC.
2245 VIA CERRO #A RIVERSIDE, CALIFORNIA 92509
PHONE NO. 909 782-8501 FAX NO. 909-782-8773
STATE LICENSE 673661

ARCHITECT
BOB STEWART AND COLE & FRICK
4195 CHESTNUT
RIVERSIDE, CALIF. 92501

CONTRACTOR
R.S.H. CONSTRUCTION
10392 HILLSIDE ROAD
ALTA LOMA, CALIF. 91701

JOB NAME
FAIRMOUNT PARK BOATHOUSE
2707 LOCUST STREET
RIVERSIDE, CALIF.

SHEET
3 OF 5

CABINETRY SHOP DRAWINGS

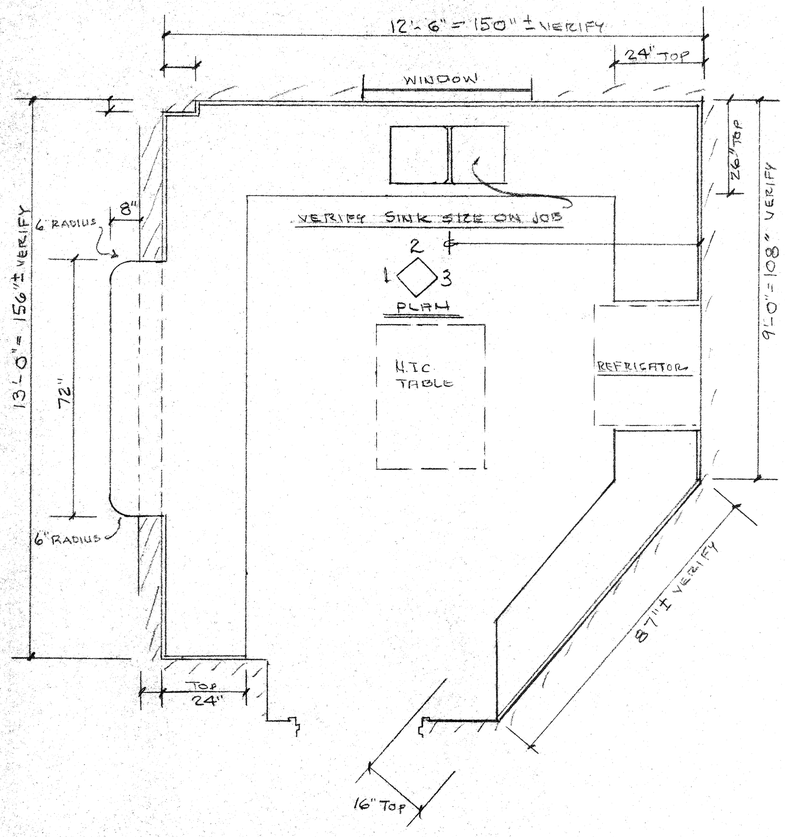

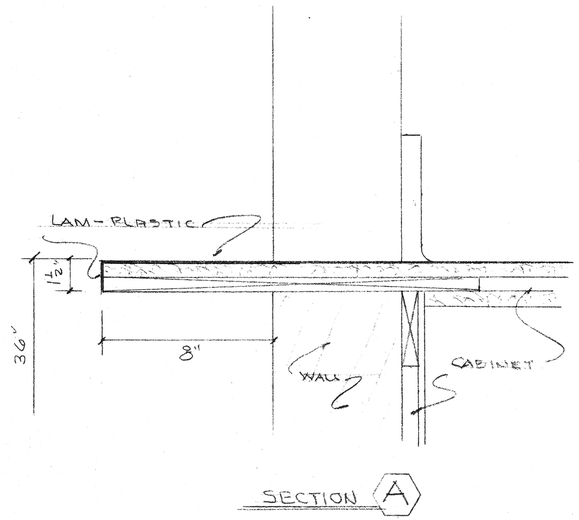

NO EXCEPTION TAKEN ☐ MAKE CORRECTIONS NOTED
☐ REJECTED ☐ REVISE AND RESUBMIT
☐ SUBMIT SPECIFIED ITEM

Checking is only for general conformance with the design concept of the project and general compliance with the information given in the contract documents. Any action shown is subject to the requirements of the plans and specifications. Contractor is responsible for: dimensions which shall be confirmed and correlated at the job site; fabrication processes and techniques of construction; coordination of his work with that of all other trades; and the satisfactory performance of his work.

CITY OF RIVERSIDE
PARK & RECREATION DEPARTMENT
DATE 10/28/94 BY

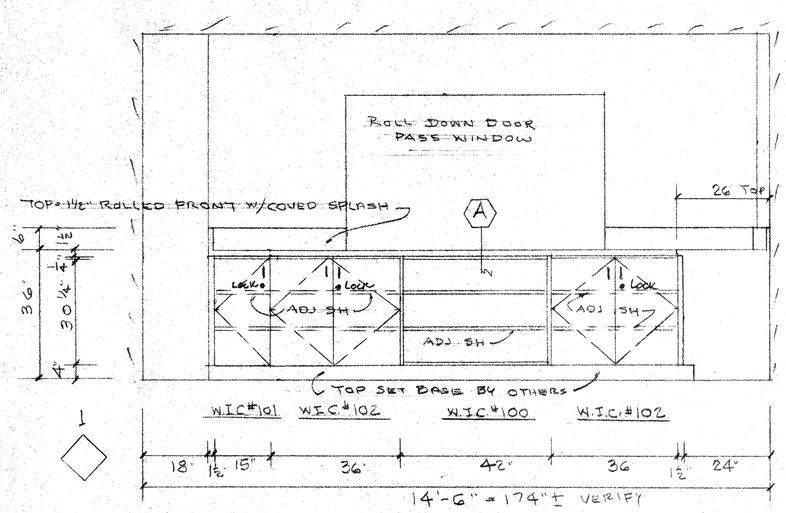

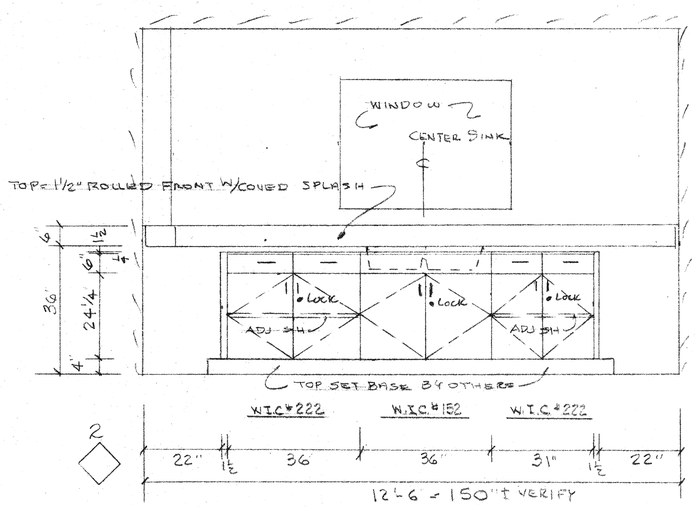

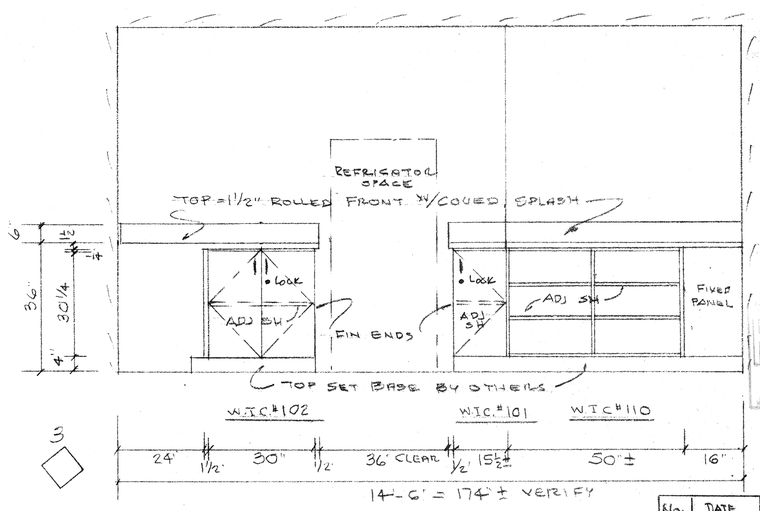

RECEIVED OCT 31 1994 PARK & RECREATION PLANNING & DESIGN

1 ROOM CABINET'S REQ SERVING ROOM SECOND FLOOR
CABINET COLOR = GRADE A-A (INT./PA) BIRCH PLYWOOD
TOP COLOR =
ARCH ELEV A-4

No.	DATE	BY	REMARKS
1	10-26-94	DL	

DRAWN	MITCH
DATE	7-27-94
SCALE	½"=1'-0
JOB No	#9429

LOZANO CASEWORKS, INC.
2245 VIA CERRO #A RIVERSIDE, CALIFORNIA 92509
PHONE NO. 909 782-8501 FAX NO. 909-782-8773
STATE LICENSE 673661

ARCHITECT
BOB STEWART AND COLE & FRICK
4195 CHESTNUT
RIVERSIDE, CALIF. 92501

CONTRACTOR
R.S.H. CONSTRUCTION
10392 HILLSIDE ROAD
ALTO LOMA, CALIF. 91701

JOB NAME
FAIRMOUNT PARK BOATHOUSE
2707 LOCUST STREET
RIVERSIDE, CALIF.

SHEET 4 OF 5

CABINETRY SHOP DRAWINGS

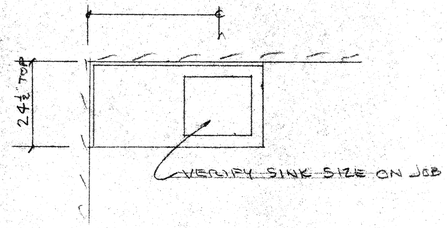

PLAN

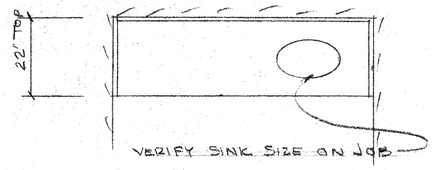

PLAN

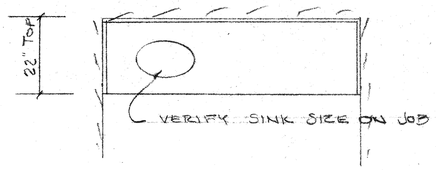

PLAN

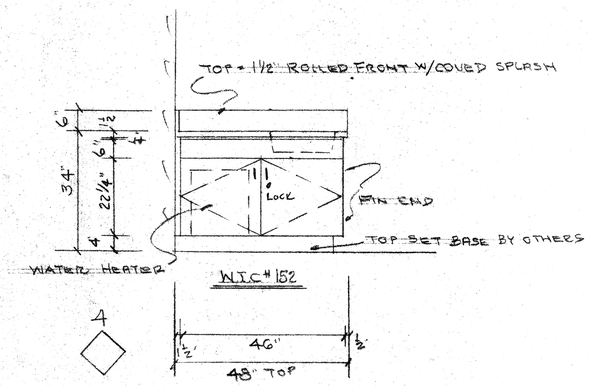

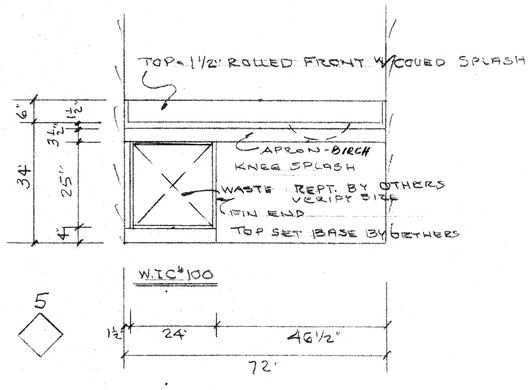

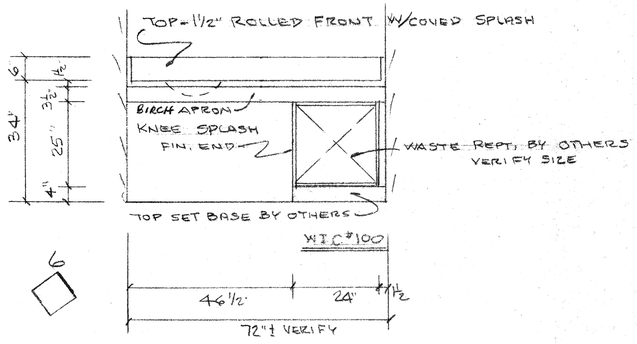

1 PULLMAN REQ RENTAL OFFICE RESTROOM LOWER LEVEL PLAN
CABINET COLOR = BIRCH PLYWOOD
TOP COLOR =

ARCH ELEV #A-4

1 PULLMAN REQ MEN'S RESTROOM SECOND FLOOR
CABINET COLOR = BIRCH PLYWOOD
TOP COLOR =

ARCH ELEV #A-4

1 PULLMAN REQ WOMEN RESTROOM SECOND FLOOR
CABINET COLOR = BIRCH PLYWOOD
TOP COLOR =

ARCH ELEV #A-4

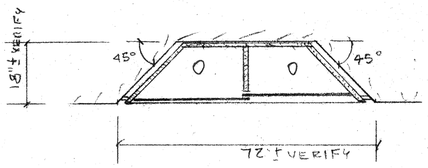

PLAN

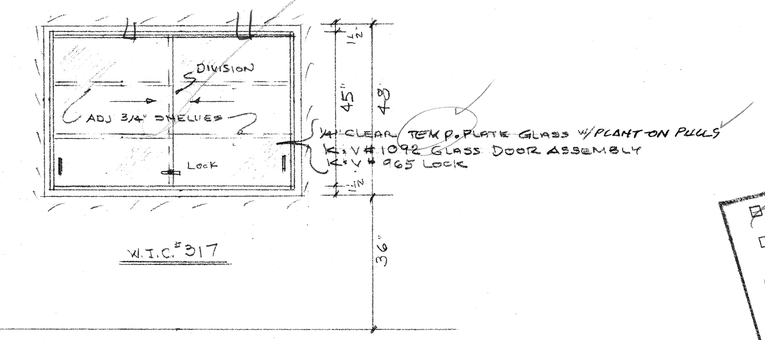

1 DISPLAY REQ ENTRY SECOND FLOOR
CABINET COLOR = BIRCH PLYWOOD

ARCH ELEV NON
DETAIL E/A-7

☒ NO EXCEPTION TAKEN ☐ MAKE CORRECTIONS NOTED
☐ REVISE AND RESUBMIT
☐ REJECTED ☐ SUBMIT SPECIFIED ITEM

Checking is only for general conformance with the design concept of the project and general compliance with the information given in the contract documents. Any action shown is subject to the requirements of the plans and specifications. Contractor is responsible for: dimensions which shall be confirmed and correlated at the job site; fabrication processes and techniques of construction; coordination of his work with that of all other trades; and the satisfactory performance of his work.

CITY OF RIVERSIDE
PARK & RECREATION DEPARTMENT
DATE 11/28/94 BY

OCT 31 1994
PARK & RECREATION PLANNING & DESIGN

No	DATE	BY	REMARKS
1	10-26-94	DL	

DRAWN	MITCH
DATE	7-27-94
SCALE	½" = 1'-0
JOB NO.	# 9429

LOZANO CASEWORKS, INC.
2245 VIA CERRO #A RIVERSIDE, CALIFORNIA 92509
PHONE NO. 909 782-8501 FAX NO. 909-782-8773
STATE LICENSE 673661

ARCHITECT
BOB STEWART AND COLE & FRICK
4195 CHESTNUT
RIVERSIDE, CALIF. 92501

CONTRACTOR
R.S.H. CONSTRUCTION
10392 HILLSIDE ROAD
ALTA LOMA, CALIF. 91701

JOB NAME
FAIRMOUNT PARK BOATHOUSE
2707 LOCUST STREET
RIVERSIDE, CALIF.

SHEET
5 OF 5

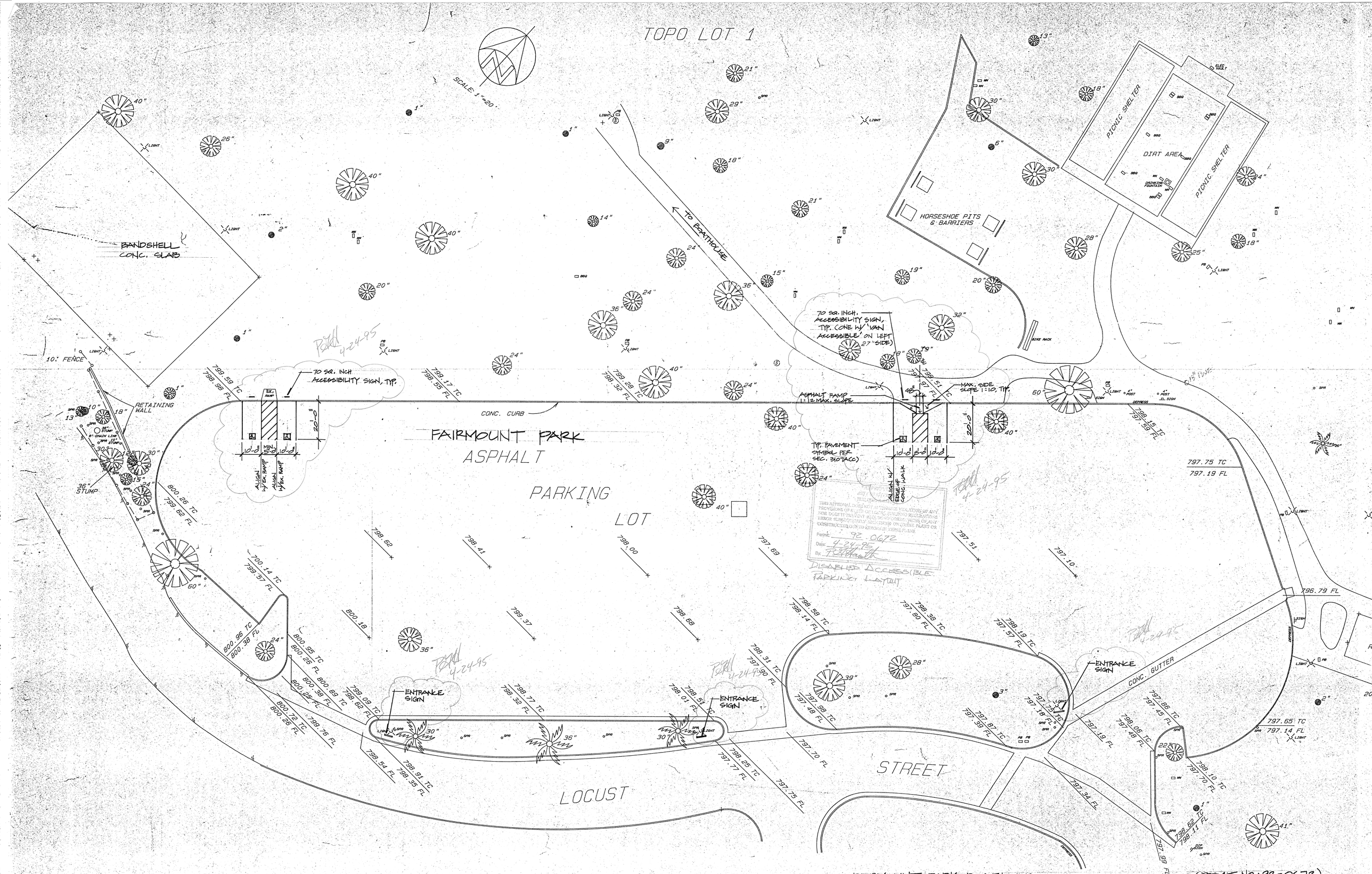

FAIRMOUNT PARK BOATHOUSE 2707 LOCUST STREET (PERMIT NO.: 92-0672)
HANDICAP PARKING STALLS LAYOUT PLAN
4-24-95

RECEIVED
OCT 23 1995

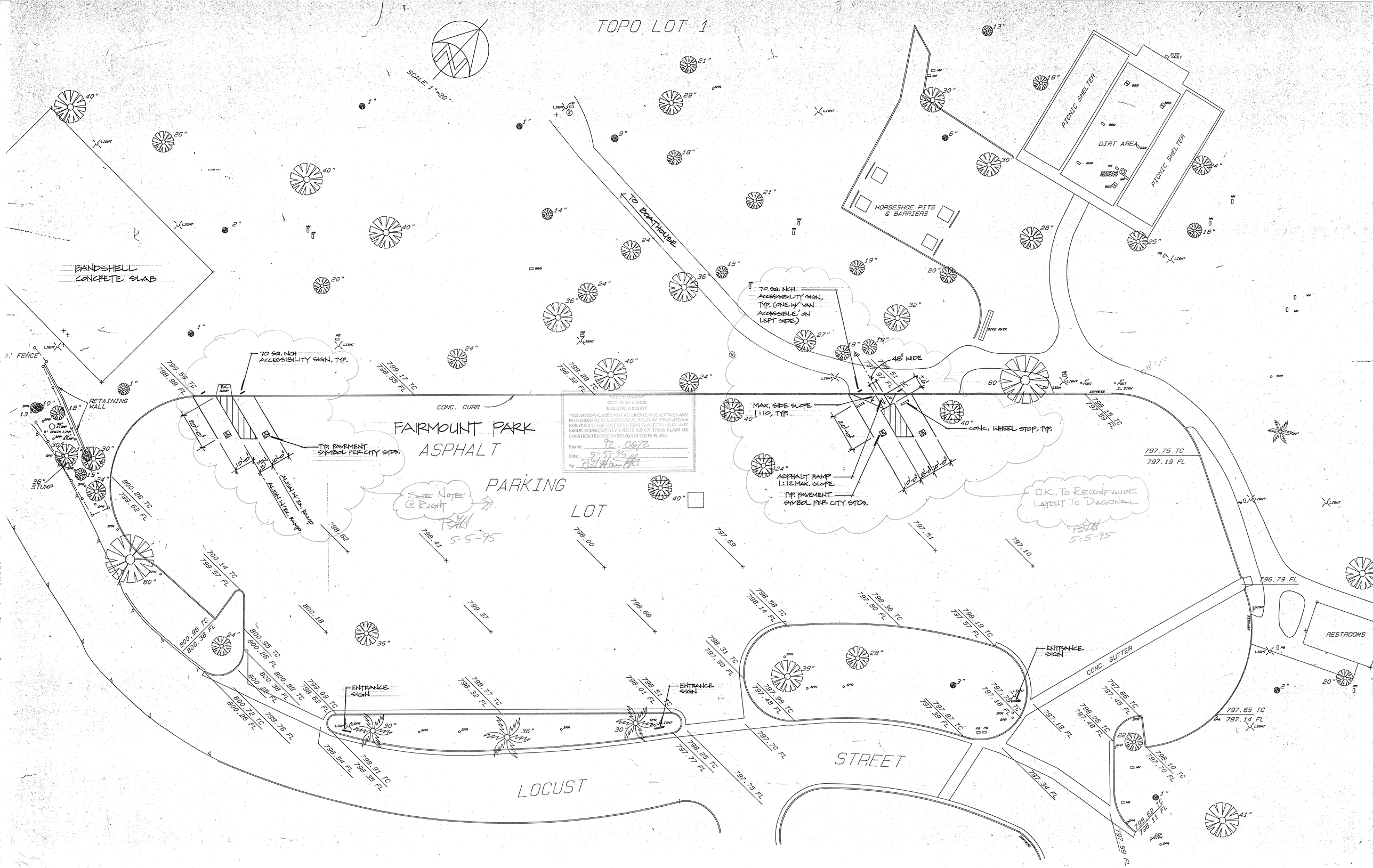

FAIRMOUNT PARK BOATHOUSE
HANDICAP PARKING STALLS LAYOUT PLAN
REVISED ON 5-5-93

2707 LOCUST STREET
(PERMIT NO.: 92-0672)

RECEIVED
OCT 2 1 1991
PARK & RECREATION
MANAGEMENT