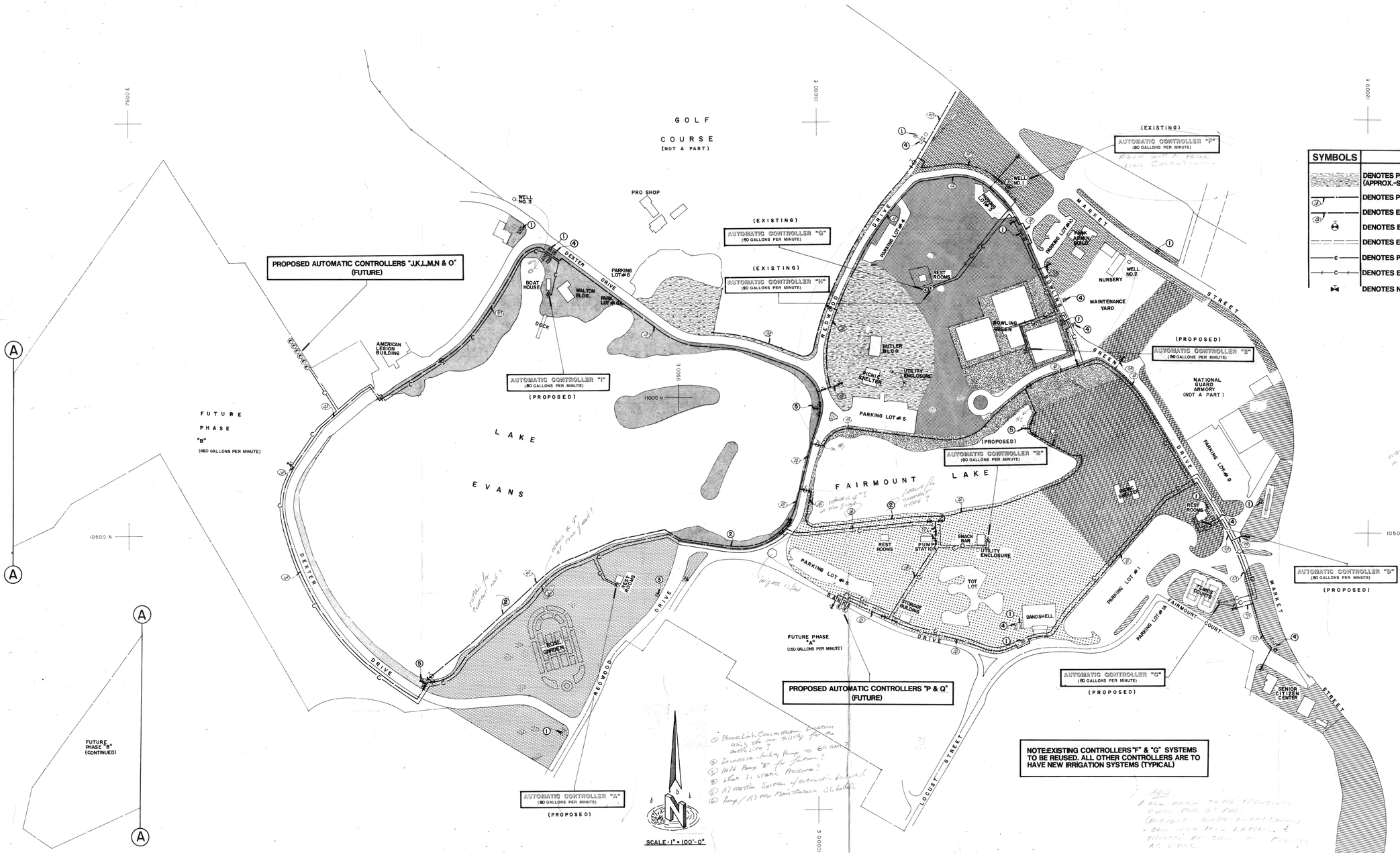

LEGEND

SYMBOLS	DESCRIPTIONS
	DENOTES PROPOSED AREA OF CONTROLLER COVERAGE (APPROX.-STIPPLING VARIES FROM CONTROLLER TO CONTROLLER)
	DENOTES PROPOSED MAIN LINE ROUTING & SIZES
	DENOTES EXISTING MAIN LINE
	DENOTES EXISTING GATE VALVE
	DENOTES EXISTING SLEEVE
—C—	DENOTES PROPOSED COMMUNICATION CABLE ROUTING
—C—	DENOTES EXISTING COMMUNICATION CABLE
	DENOTES NEW GATE VALVE (BUTTERFLY TYPE)

GENERAL STATISTICS

1. MAXIMUM WATERING TIME PER DAY — 7 HOURS
   11:00 P.M. TO 6:00 A.M. (MAXIMUM 5 DAYS PER WEEK)
2. MAXIMUM GALLONS PER MINUTE — 1,360 G.P.M.
   A. CURRENT 720
   B. FUTURE/AREA "A" 160
   C. FUTURE/AREA "B" 480
3. MAXIMUM GALLONS PER MINUTE PER PUMP
   A. JOCKEY 40
   B. MAIN PUMP "A" 660
   C. MAIN PUMP "B" 660
4. DAILY EVAPOTRANSPIRATION LOSS
   SUMMER (JUNE/JULY/AUGUST) .20"
   FALL (SEPTEMBER/OCTOBER/NOVEMBER) .12"
   WINTER (DECEMBER/JANUARY/FEBRUARY) .06"
   SPRING (MARCH/APRIL/MAY) .13"
5. MAXIMUM GALLONS PER MINUTE PER CONTROL VALVE — 80 G.P.M
6. PRESSURE AVAILABLE AT DISCHARGE OF PUMPS (AT 1,360 G.P.M.) — 100 P.S.I.
7. MINIMUM PRECIPITATION PER HEAD/PER HOUR — .50"
   MAXIMUM GALLONS PER MINUTE PER HEAD — 20
   MAXIMUM STATIONS PER SATELLITE — 32
   (TO BE BASED ON PRECIPITATION OF .20" PER DAY, WITHIN 7 HOURS)
8. LAKE WATER CAPACITY — 10,905,840 GALLONS
9. MAXIMUM DAILY WATER USE — 571,200 GALLONS
   CURRENT 302,400 GALLONS
   FUTURE 268,800 GALLONS
10. DAILY WATER CONSUMPTION (APPROXIMATE/BASED ON DAILY EVAPOTRANSPIRATION LOSS)

SUMMER	CURRENT	287,531 GALLONS
	FUTURE	262,219 GALLONS
FALL	CURRENT	172,519 GALLONS
	FUTURE	157,382 GALLONS
WINTER	CURRENT	86,259 GALLONS
	FUTURE	78,665 GALLONS
SPRING	CURRENT	186,895 GALLONS
	FUTURE	170,442 GALLONS

CONSTRUCTION NOTES

1. REMOVE EXISTING IRRIGATION WATER METER AND BACKFLOW UNIT.
2. ABANDON EXISTING LINE.
3. RELOCATE EXISTING 1-1/2 INCH WATER METER (DOMESTIC).
4. EXISTING DOMESTIC EQUIPMENT (WATER METER, BACKFLOW ASSEMBLY, ETC.) TO REMAIN IN OPERATION.
5. CLEAN-OUT VALVE
6. CONNECT NEW LINE TO EXISTING.

AIC
ASSOCIATED IRRIGATION CONSULTANTS
2014 SEPULVEDA BOULEVARD, LOS ANGELES, CALIFORNIA 90025
(213) 477-6525

CONSULTANTS:

CONSULTANTS:

CLIENT:
CITY OF RIVERSIDE
PARK & RECREATION DEPARTMENT
3900 MAIN STREET
RIVERSIDE, CALIFORNIA 92522
PHONE NO. (714) 787-7223

PROJECT:
FAIRMOUNT PARK
RIVERSIDE, CALIFORNIA

SHEET TITLE: IRRIGATION MASTER PLAN

revisions:

date:
drawn:
checked:
approved:
Issued:

SHEET NO.
OF

RECEIVED
AUG 17 1992
PARK & RECREATION DEPARTMENT

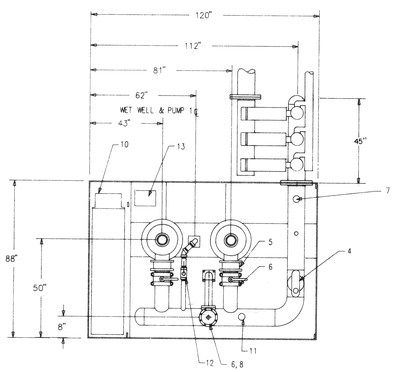

TOP VIEW

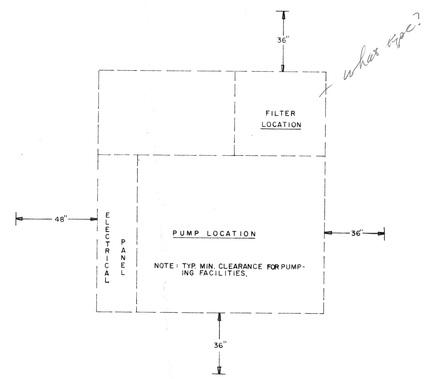

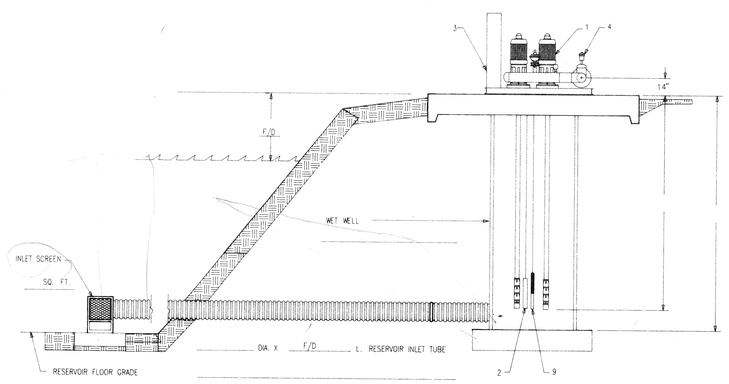

ELEVATION PLAN

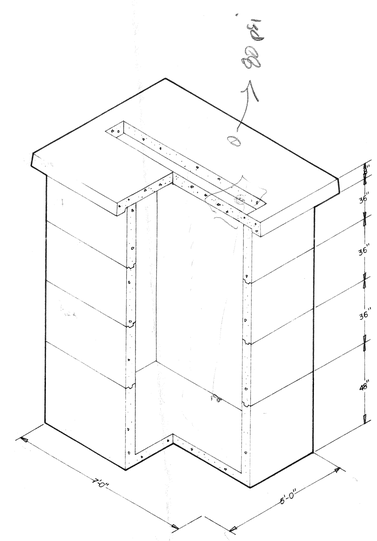

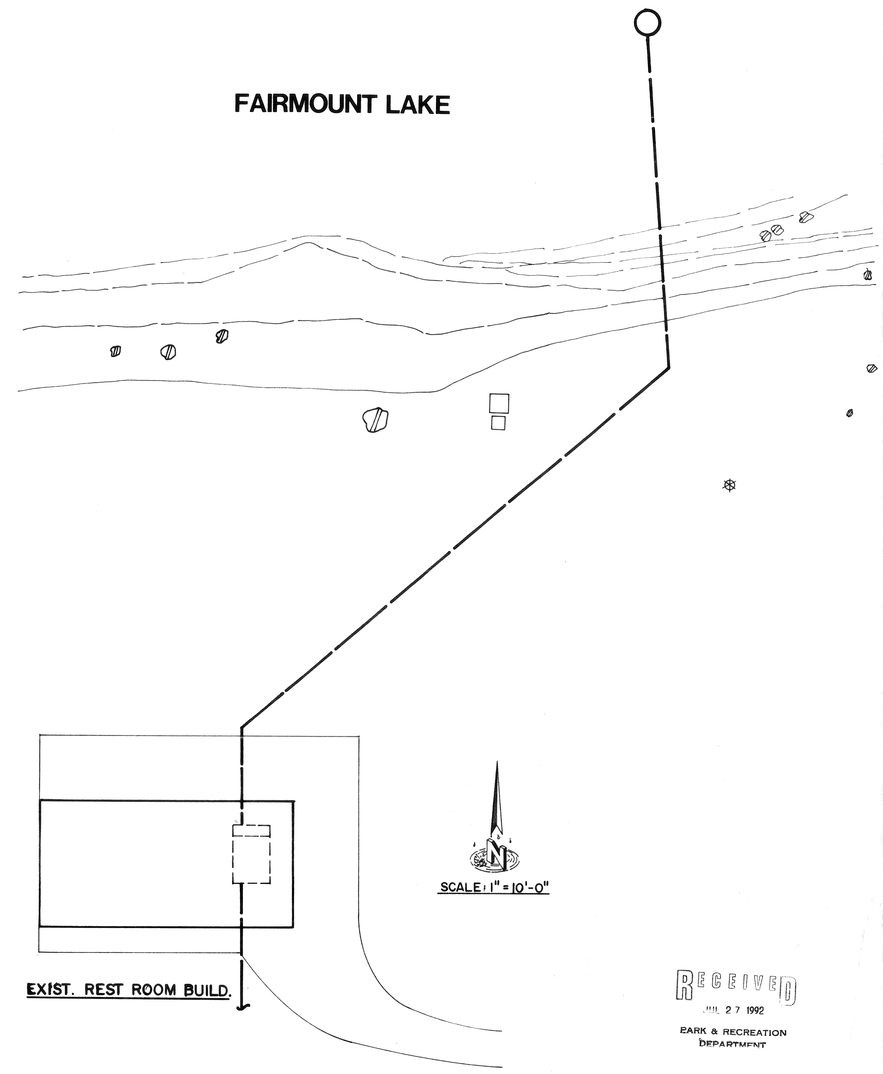

RECEIVED
JUL 27 1992
PARK & RECREATION DEPARTMENT

AIC
ASSOCIATED IRRIGATION CONSULTANTS
2014 SEPULVEDA BOULEVARD, LOS ANGELES, CALIFORNIA 90025
(213) 477-6525 FAX (213) 477-2813

DIETERICH POST REORDER NO. 142260

CONSULTANTS:

CONSULTANTS:

CLIENT:
CITY OF RIVERSIDE
PARK & RECREATION DEPARTMENT

PROJECT:
FAIRMOUNT PARK

SHEET TITLE: **IRRIGATION CONSTRUCTION DETAILS**

revisions:

ASSOCIATED IRRIGATION CONSULTANTS
PROGRESS SUBMITTAL
PRINTING DATE: 7-23-92

date:
drawn:
checked:
approved:
issued:

SHEET NO.

OF