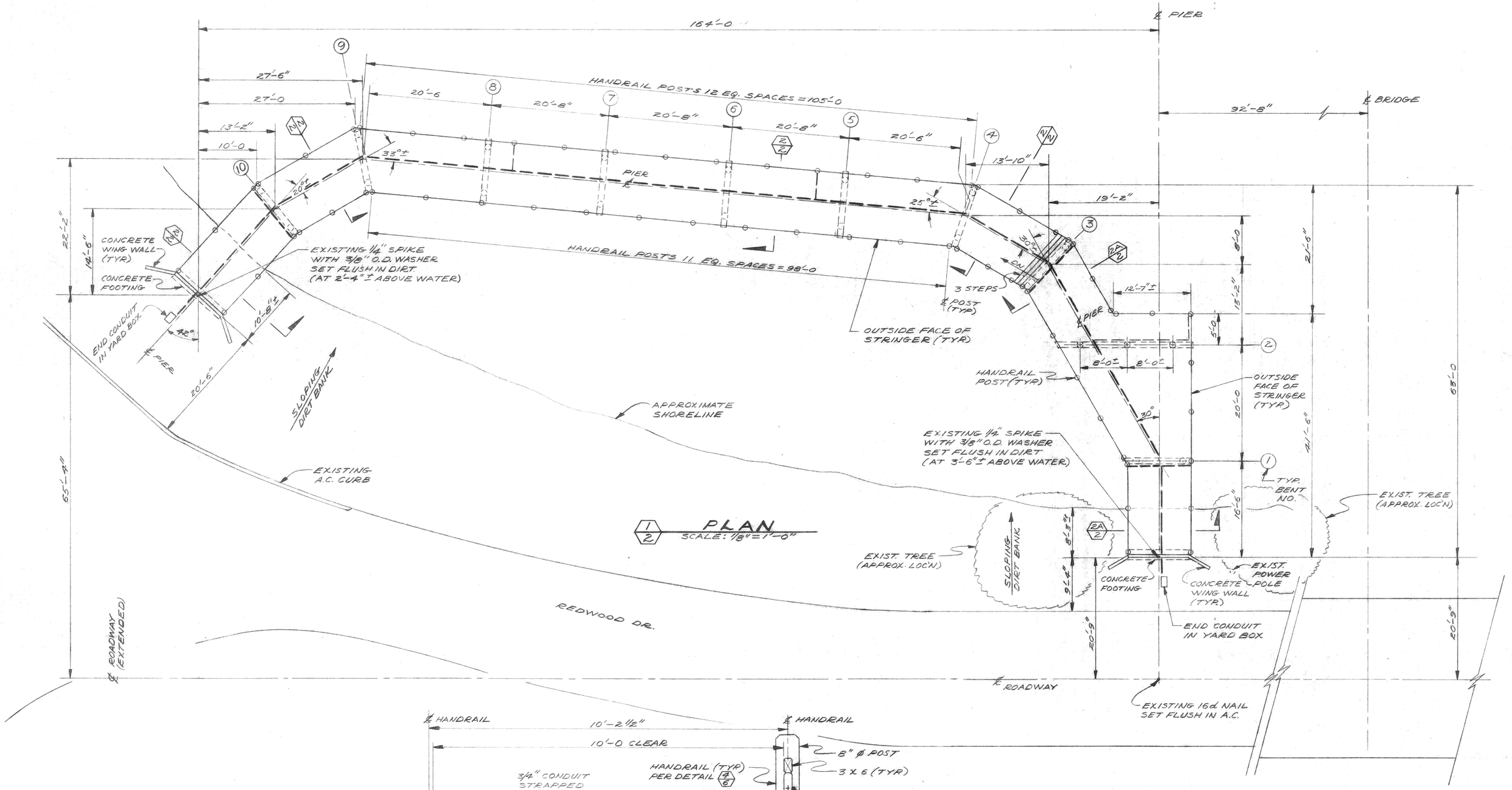

1/2 **PLAN**
SCALE: 1/8"=1'-0"

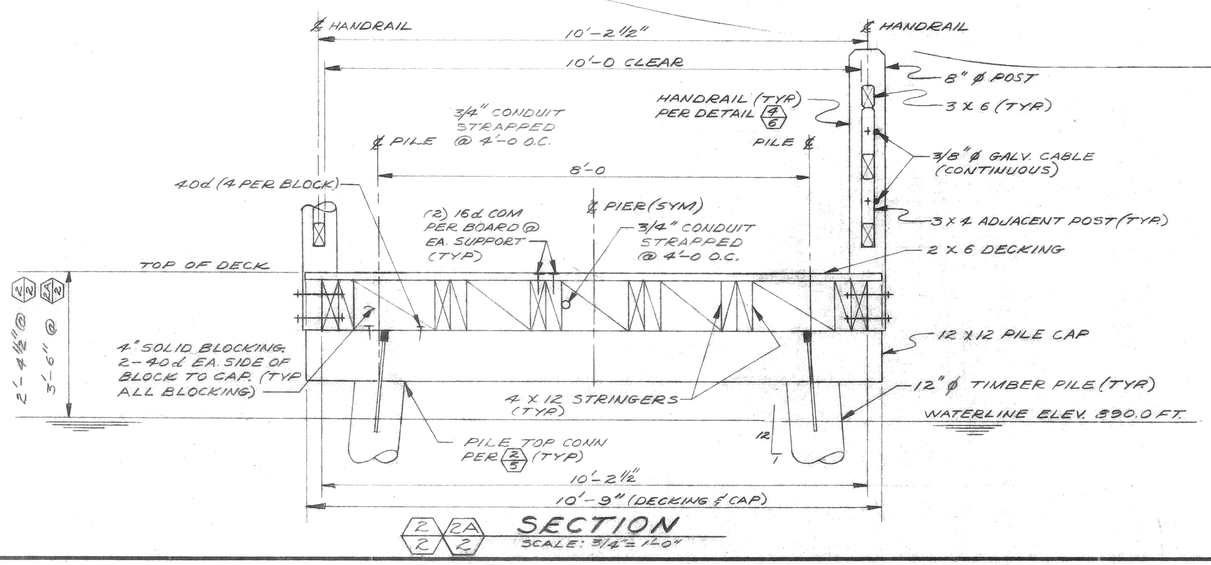

2/2 2A/2 **SECTION**
SCALE: 3/4"=1'-0"

REGISTERED PROFESSIONAL ENGINEER — EMIL D. HELLMERS — No. 14864 — MAR. 31 1989 — CIVIL — STATE OF CALIFORNIA

RECEIVED
MAY 02 1989
PARK & RECREATION DEPARTMENT

DON HELLMERS ENGINEERING, SAN PEDRO, CA. (213) 831-0608	FAIRMONT PARK FISHING PIER
DRAWN VJE · SCALE NOTED	PIER NO. 1
CHECKED DDH · JOB NO 88240	PLAN & SECTION
APP'D ____ · DATE 12/20/88	DWG. NO 2

BISHOP GRAPHICS/ACCUPRESS
REORDER NO. AA5549

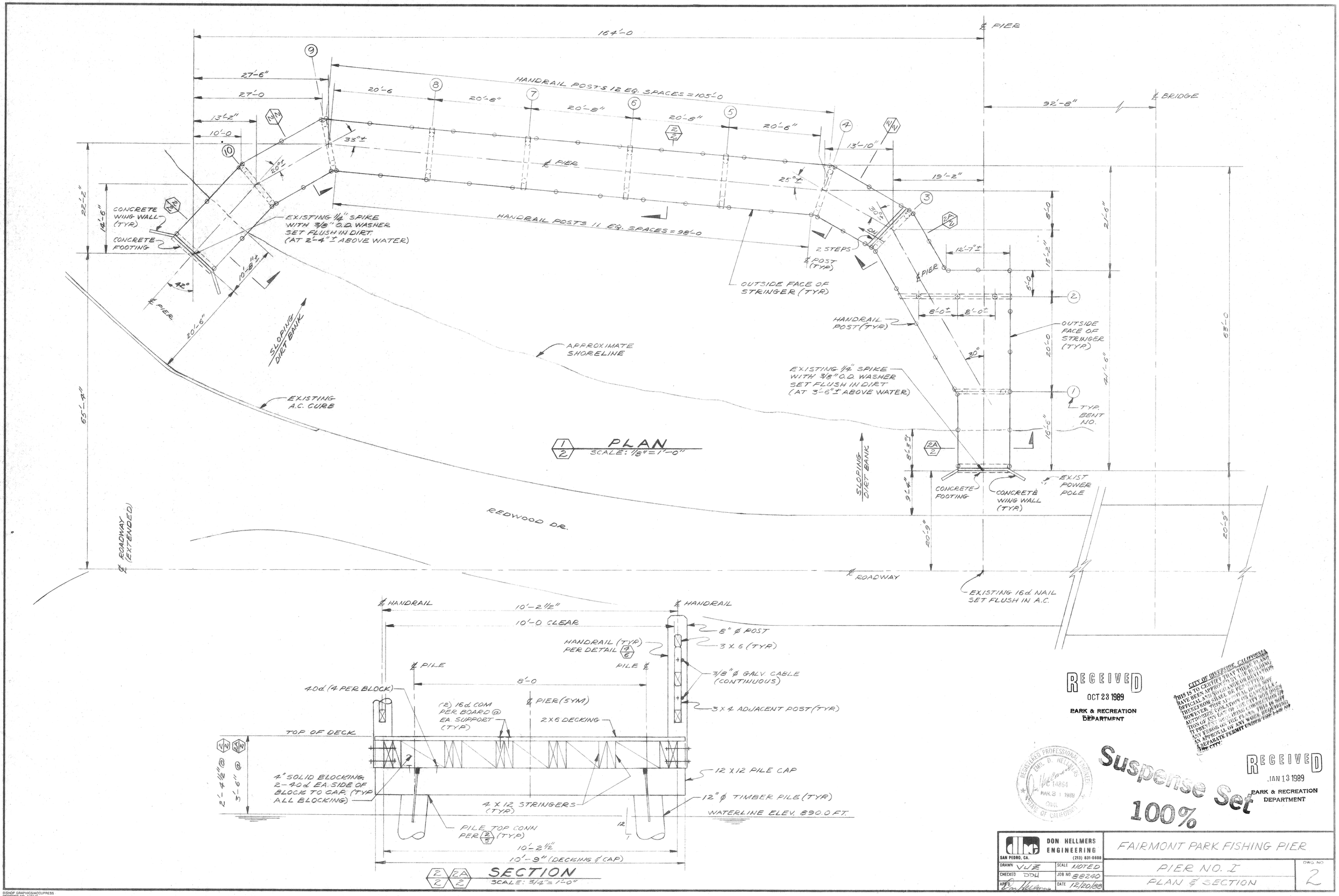

1/2 PLAN
SCALE: 1/8" = 1'-0"

2/2 2A/2 SECTION
SCALE: 3/4" = 1'-0"

RECEIVED
OCT 23 1989
PARK & RECREATION DEPARTMENT

CITY OF HAYWARD, CALIFORNIA
THIS IS TO CERTIFY THAT THERE PLANS HAVE BEEN APPROVED BY THE BUILDING OFFICIAL AND NO CHANGE OR DEVIATION THEREFROM SHALL BE PERMITTED HOWEVER, THIS APPROVAL DOES NOT AUTHORIZE VIOLATION OF CANCELLATION OF ANY LAW OR CITY ORDINANCE. IT PREVENTS THE CITY CONSTRUCTION OF ANY PERSON OR THE PLANS. THIS IS NOT AN APPROVAL OF ANY WORK REQUIRING A SEPARATE PERMIT UNDER THE LAW OF THE CITY.

REGISTERED PROFESSIONAL ENGINEER EMIL D. HELLMERS C 14864 MAR. 31 1989 CIVIL STATE OF CALIFORNIA

Suspense Set
100%

RECEIVED
JAN 13 1989
PARK & RECREATION DEPARTMENT

DON HELLMERS ENGINEERING
SAN PEDRO, CA. (213) 831-0608

DRAWN VJZ	SCALE NOTED	FAIRMONT PARK FISHING PIER	
CHECKED DDH	JOB NO 88240	PIER NO. I	DWG. NO. 2
APP'D Don Hellmers	DATE 12/20/88	PLAN & SECTION	

BISHOP GRAPHICS/ACCUPRESS REORDER NO. A45549

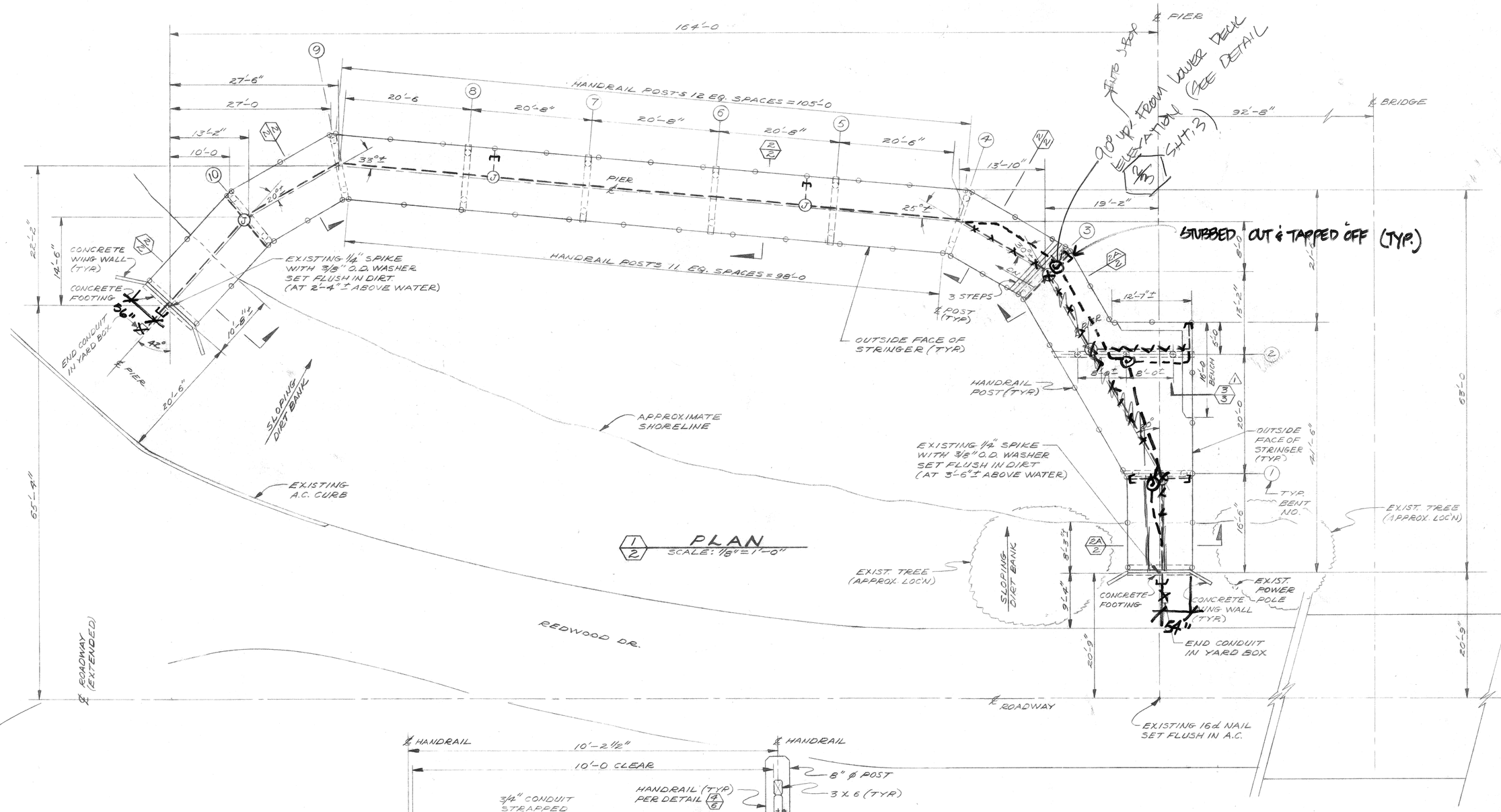

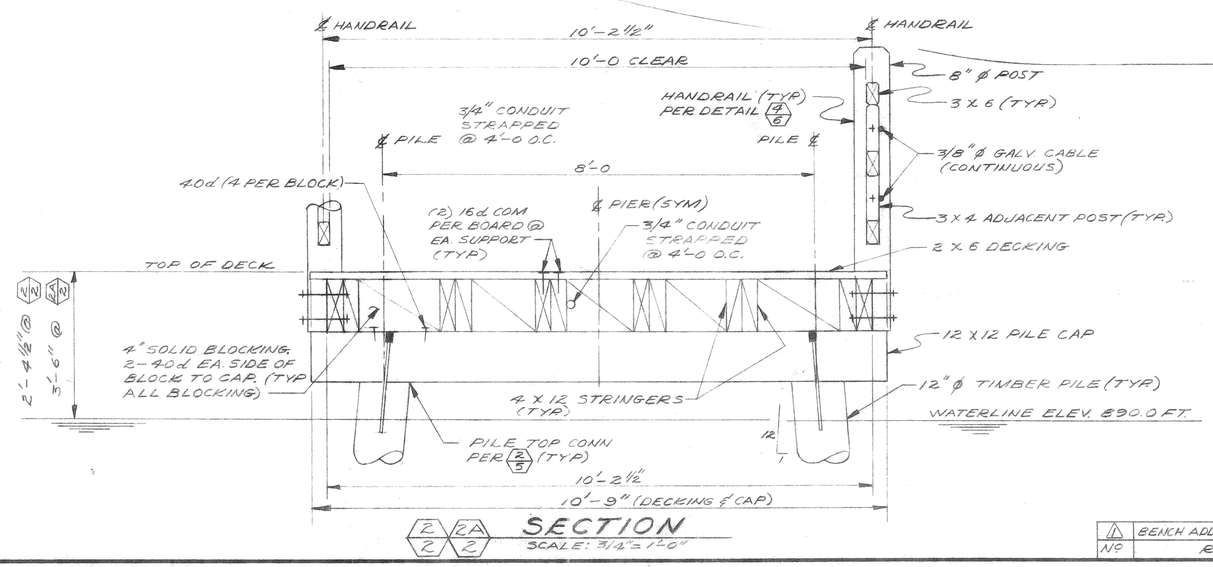

RECEIVED
OCT 23 1989
PARK & RECREATION DEPARTMENT

REGISTERED PROFESSIONAL ENGINEER EARL D. HELLMERS No. 13864 MAR. 31, 1990 CIVIL STATE OF CALIFORNIA

NO	REVISION	DATE	APP'D
1	BENCH ADDED, J-BOXES ADDED	5/31/89	DDH

DON HELLMERS ENGINEERING
SAN PEDRO, CA. (213) 831-0608

DRAWN	VLE	SCALE	NOTED
CHECKED	DDH	JOB NO	88240
APP'D		DATE	12/20/88

FAIRMONT PARK FISHING PIER

PIER NO. 1
PLAN & SECTION

DWG NO. 2

BISHOP GRAPHICS/ACCUPRESS
REORDER NO. 445549

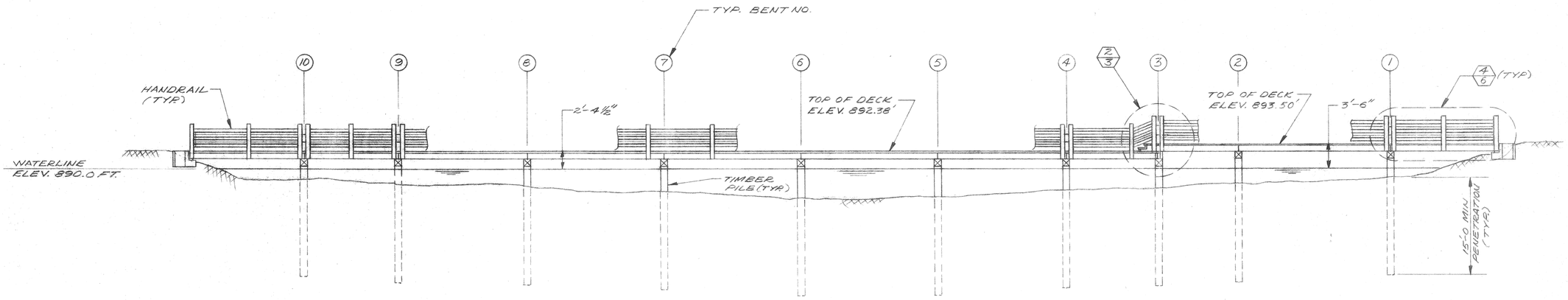

1/3 ELEVATION
SCALE: 1/8"=1'-0"

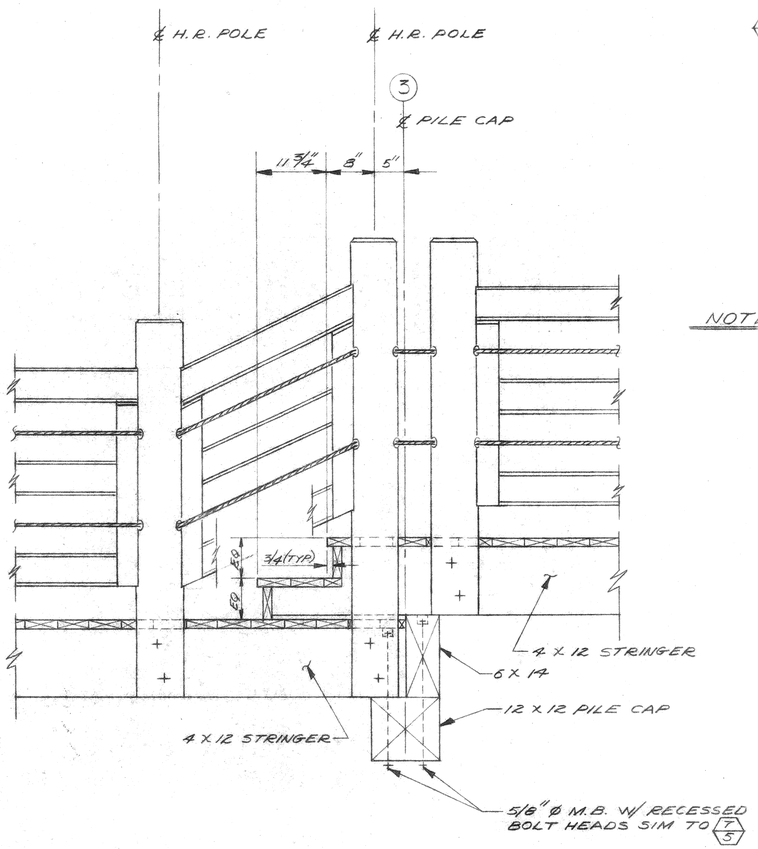

NOTE: REFER TO 4/6 FOR TYP HANDRAIL CONSTRUCTION.

2/3 ELEVATION ~ HANDRAIL @ STAIRS
SCALE: 1"=1'-0"

RECEIVED
OCT 23 1989
PARK & RECREATION DEPARTMENT

CITY OF RIVERSIDE, CALIFORNIA
THIS IS TO CERTIFY THAT THESE PLANS HAVE BEEN APPROVED BY THE BUILDING OFFICIAL AND SUCH USE OR DEVIATION THEREFROM SHALL BE PERMITTED; HOWEVER, THIS APPROVAL DOES NOT AUTHORIZE THE VIOLATION OR CANCELLATION OF ANY LAW OR THE CORRECTION OF ANY ERROR REQUIRING CORRECTION OF IT PRESENT ON THE PLANS. THIS IS NOT AN APPROVAL OF ANY WORK REQUIRING A SEPARATE PERMIT UNDER THE CITY'S

REGISTERED PROFESSIONAL ENGINEER
EMIL D. HELLMERS
No. C 14364
MAR. 31 1989
CIVIL
STATE OF CALIFORNIA

Suspense Set
100%

RECEIVED
JAN 13 1989
PARK & RECREATION DEPARTMENT

DON HELLMERS ENGINEERING SAN PEDRO, CA. (213) 831-0808		FAIRMONT PARK FISHING PIER
DRAWN VJE	SCALE NOTED	PIER NO. I
CHECKED DDH	JOB NO 88240	ELEVATIONS
APP'D Don Hellmers	DATE 12-20-88	DWG NO 3

BISHOP GRAPHICS/ACCUPRESS
REORDER NO. AA5549

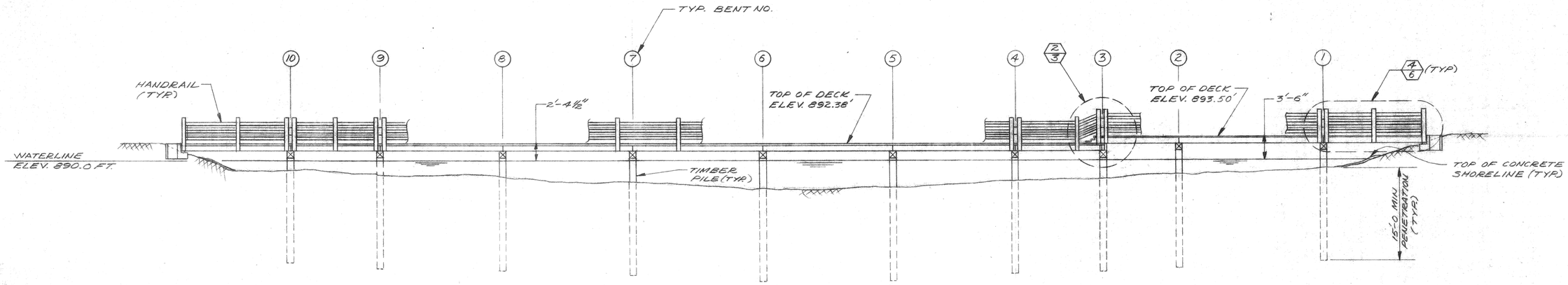

1/3 ELEVATION
SCALE: 1/8"=1'-0"

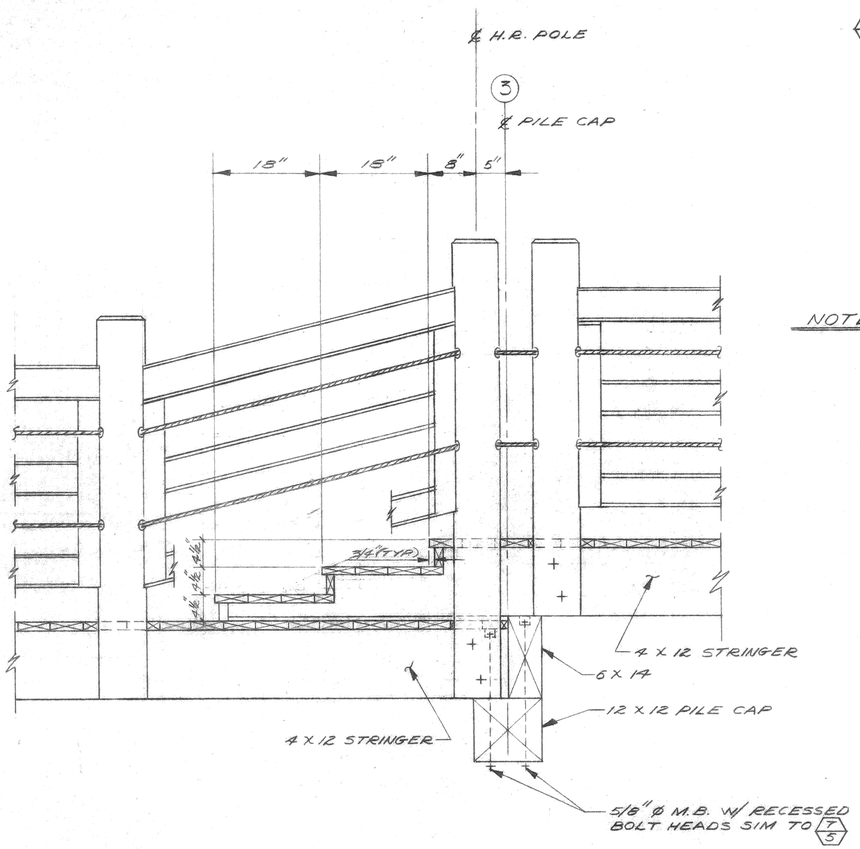

NOTE: REFER TO 4/6 FOR TYP HANDRAIL CONSTRUCTION.

2/3 ELEVATION ~ HANDRAIL @ STAIRS
SCALE: 1"=1'-0"

REGISTERED PROFESSIONAL ENGINEER
EMIL D. HELLMERS
No. C 14864
MAR 31 1989
CIVIL
STATE OF CALIFORNIA

RECEIVED
MAY 02 1989
PARK & RECREATION DEPARTMENT

DON HELLMERS ENGINEERING, SAN PEDRO, CA., (213) 831-0808	FAIRMONT PARK FISHING PIER	
DRAWN VJE / SCALE NOTED	PIER NO. I	DWG. NO. 3
CHECKED DDH / JOB NO. 88240	ELEVATIONS	
APP'D [signature] / DATE 12-20-88		

BISHOP GRAPHICS/ACCUPRESS
RECORDER NO. A45049

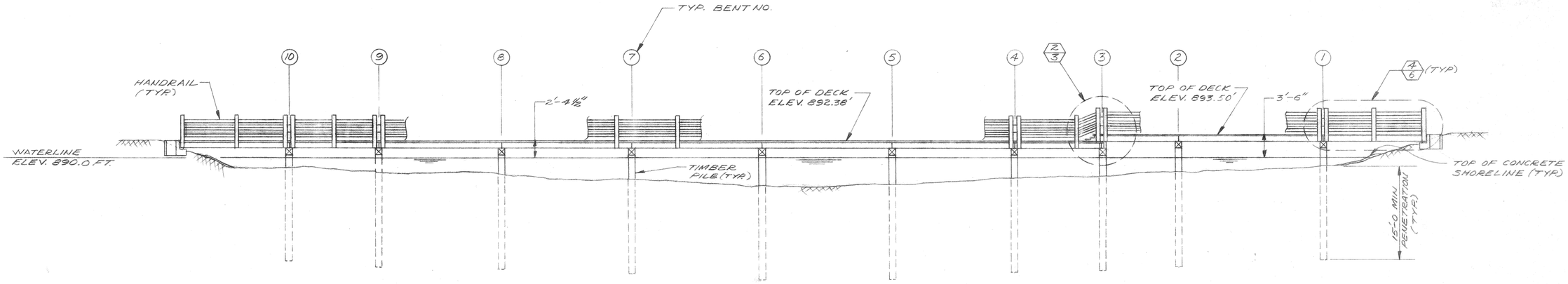

1/3 ELEVATION
SCALE: 1/8"=1'-0"

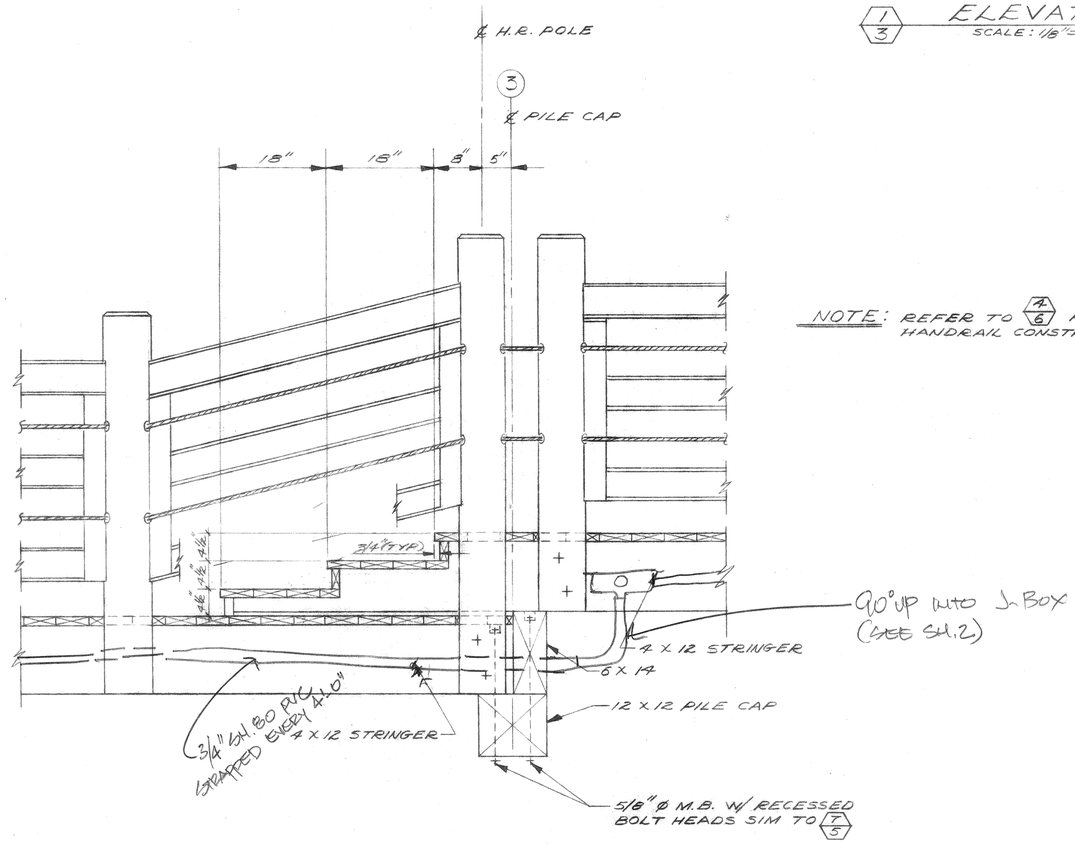

NOTE: REFER TO 4/6 FOR TYP HANDRAIL CONSTRUCTION.

2/3 ELEVATION ~ HANDRAIL @ STAIRS
SCALE: 1"=1'-0"

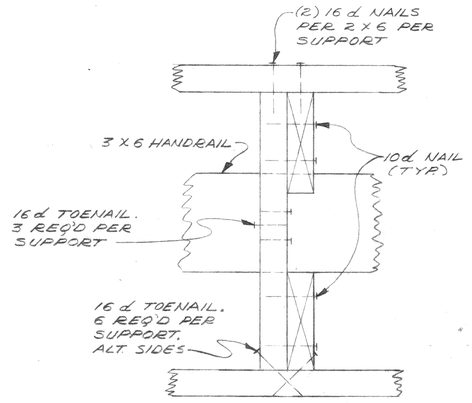

ELEV.

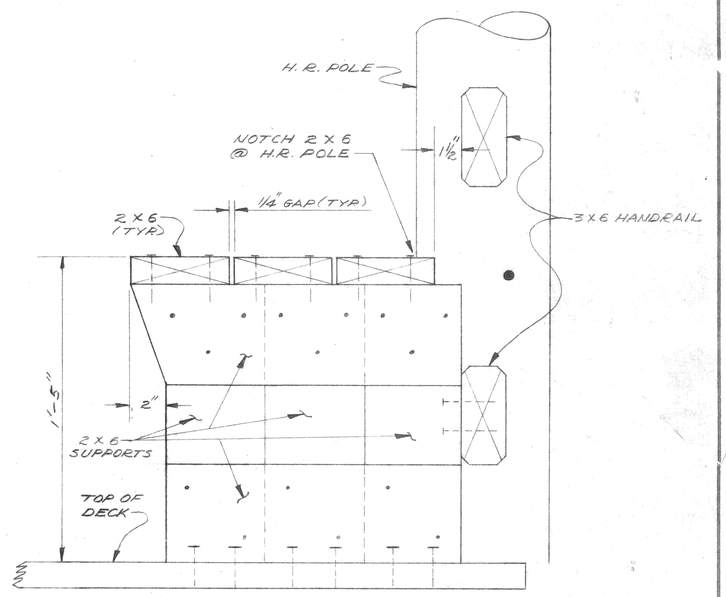

NOTE: 2 X 6 SUPPORTS REQ'D @ 4'-0 O.C.

3/3 SECTION ~ BENCH @ SUPPORT ⚠
SCALE: 3"=1'-0"

REGISTERED PROFESSIONAL ENGINEER EMIL D. HELLMERS No. 14864 MAR. 31 1989 CIVIL STATE OF CALIFORNIA

RECEIVED
OCT 23 1989
PARK & RECREATION DEPARTMENT

DON HELLMERS ENGINEERING (213) 831-0808 SAN PEDRO, CA.			FAIRMONT PARK FISHING PIER
DRAWN VJE	SCALE NOTED		PIER NO. I
CHECKED DDH	JOB NO 88240	DWG NO 3	
APP'D	DATE 10-20-88		ELEVATIONS
⚠ ADDED BENCH DETAIL	5/31/89 DDH		
NO. REVISION	DATE APP'D		

BISHOP GRAPHICS/ACCUPRESS
REORDER NO. A4554R

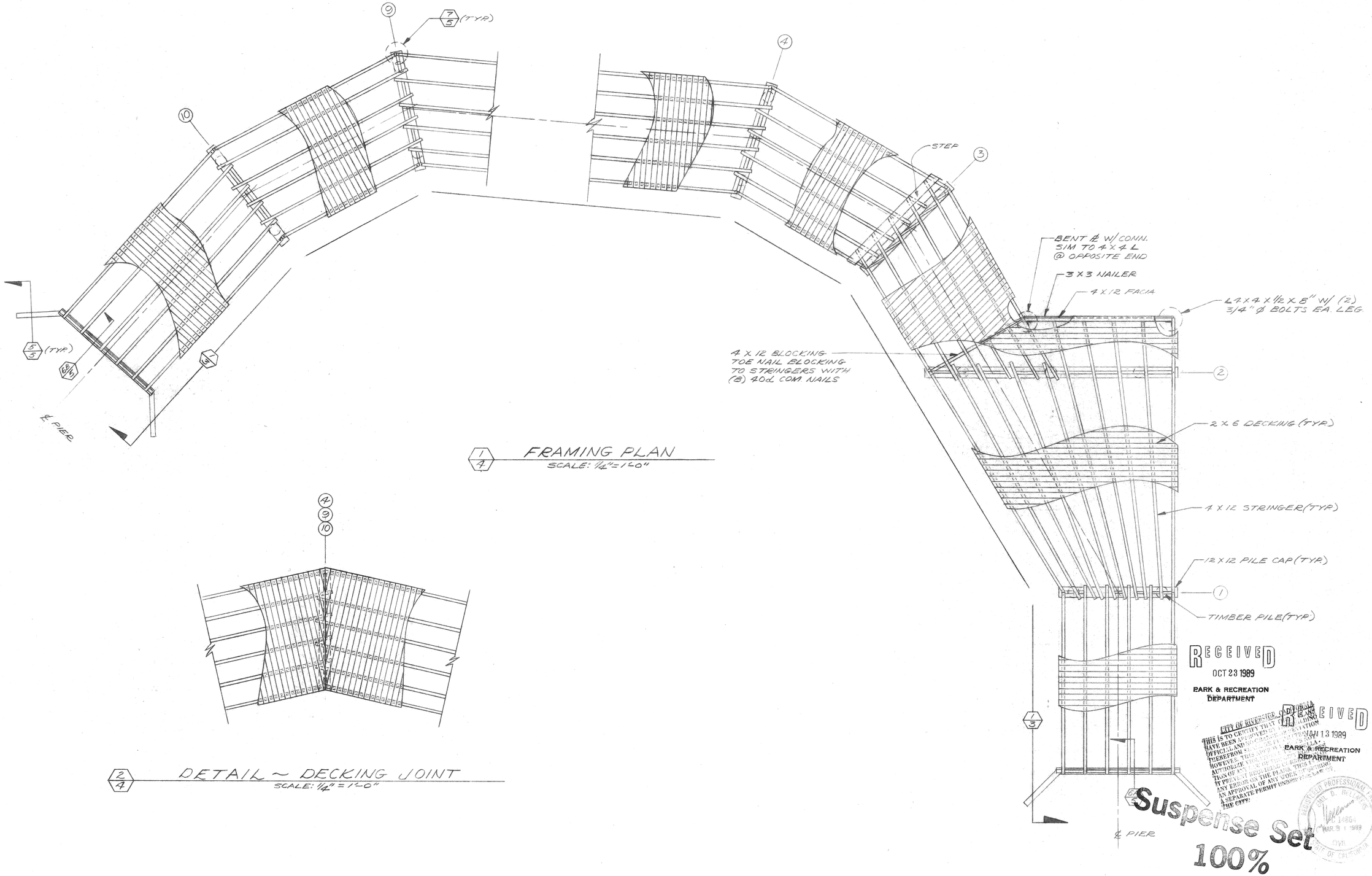

1/4 FRAMING PLAN
SCALE: 1/4" = 1'-0"

2/4 DETAIL ~ DECKING JOINT
SCALE: 1/4" = 1'-0"

RECEIVED
OCT 23 1989
PARK & RECREATION DEPARTMENT

RECEIVED
JAN 13 1989
PARK & RECREATION DEPARTMENT

CITY OF RIVERSIDE, CALIFORNIA
THIS IS TO CERTIFY THAT THE PLANS HAVE BEEN APPROVED BY THE PARK & RECREATION OFFICIAL AND SUCH PLANS ARE ON FILE THEREFROM. THIS APPROVAL IS NOT AUTHORIZE THE PLANS THAT CONTAIN ANY ERROR ON THE PLANS. THIS IS NOT AN APPROVAL OF ANY WORK IN PUBLIC AND A SEPARATE PERMIT UNDER THE LAWS OF THE CITY.

REGISTERED PROFESSIONAL ENGINEER
DON D. HELLMERS
C 14864
MAR 9 1989
CIVIL
STATE OF CALIFORNIA

Suspense Set
100%

DON HELLMERS ENGINEERING SAN PEDRO, CA. (213) 831-0608		FAIRMONT PARK FISHING PIER	
DRAWN VJZ	SCALE NOTED	PIER NO. I	DWG NO 4
CHECKED DDH	JOB NO 88240	FRAMING PLAN	
APPD	DATE 12-20-88		

BISHOP GRAPHICS/ACCUPRESS
REORDER NO. A45549

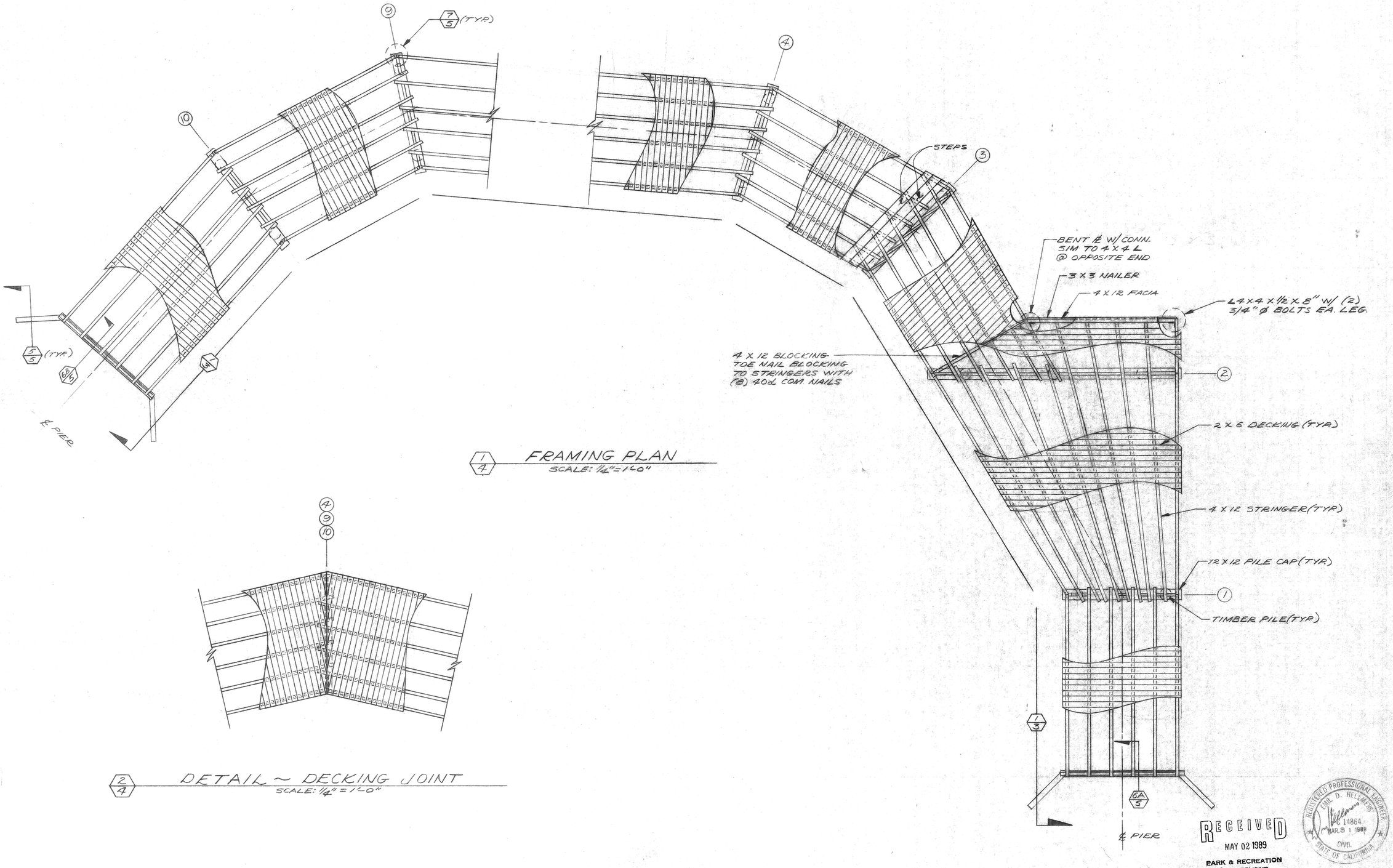

1/4 FRAMING PLAN
SCALE: 1/4"=1'-0"

2/4 DETAIL ~ DECKING JOINT
SCALE: 1/4" = 1'-0"

RECEIVED
MAY 02 1989
PARK & RECREATION DEPARTMENT

REGISTERED PROFESSIONAL ENGINEER
EMIL D. HELLMERS
RE 14864
MAR. 31 1989
CIVIL
STATE OF CALIFORNIA

DON HELLMERS ENGINEERING, SAN PEDRO, CA. (213) 831-0888	FAIRMONT PARK FISHING PIER	
DRAWN VJE / SCALE NOTED	PIER NO. I	DWG NO. 4
CHECKED DDH / JOB NO 88240	FRAMING PLAN	
APPD [signature] / DATE 12-20-88		

BISHOP GRAPHICS/ACCUPRESS
REORDER NO. 445549

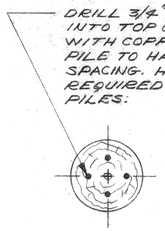

PLAN

3/5 PILE TOP TREATMENT
NO SCALE

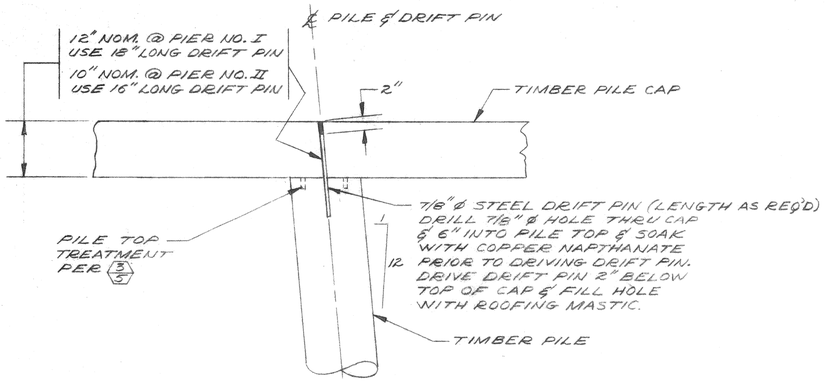

ELEV

2/5 DETAIL ~ PILE TOP CONN.
SCALE: 1½"=1'-0"

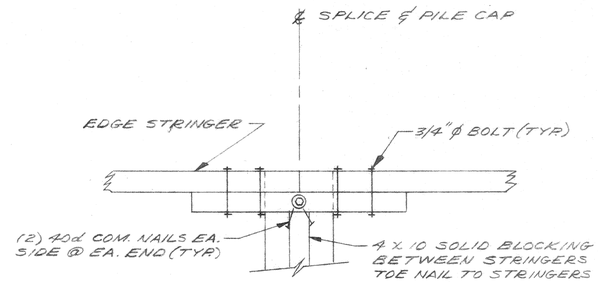

PLAN

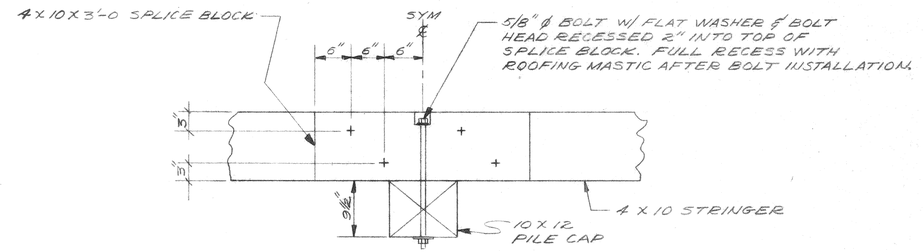

ELEV.

1/5 EDGE STRINGER SPLICE ~ PIER II
SCALE: 1"=1'-0"

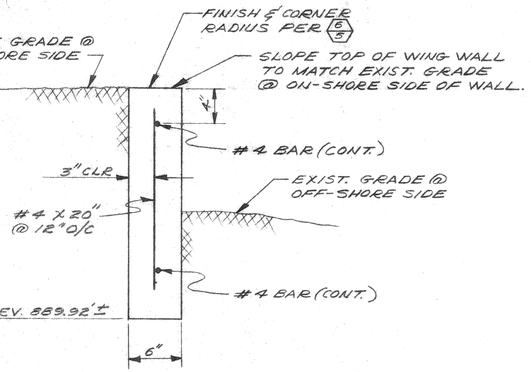

4/5 SECTION ~ WING WALL @ PIER II
SCALE: 1½"=1'-0"

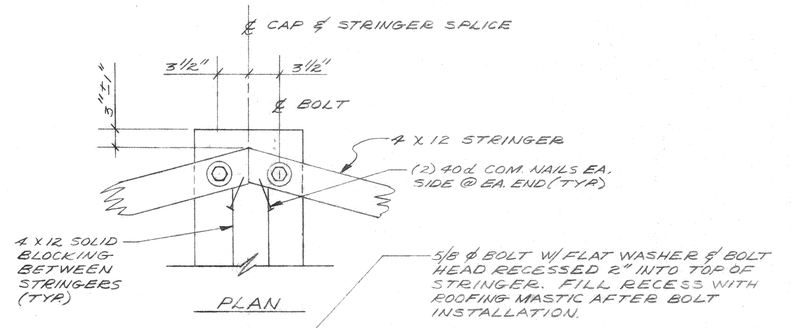

PLAN

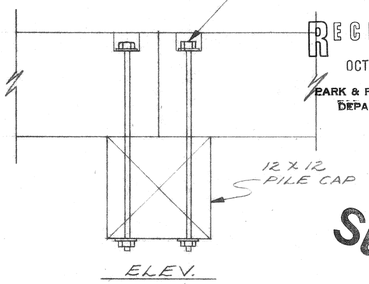

ELEV.

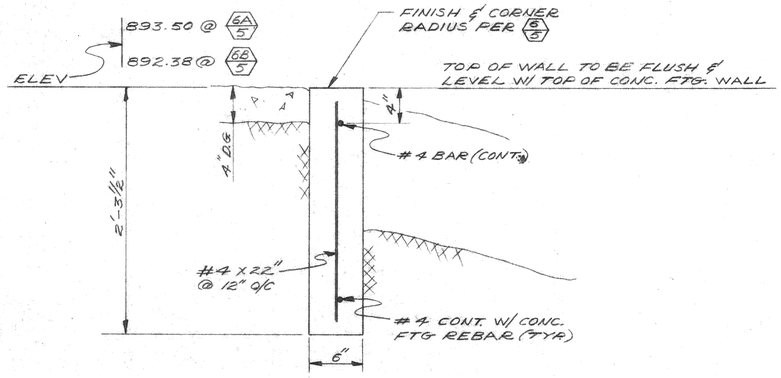

5/5 SECTION ~ WING WALL @ PIER I
SCALE: 1½"=1'-0"

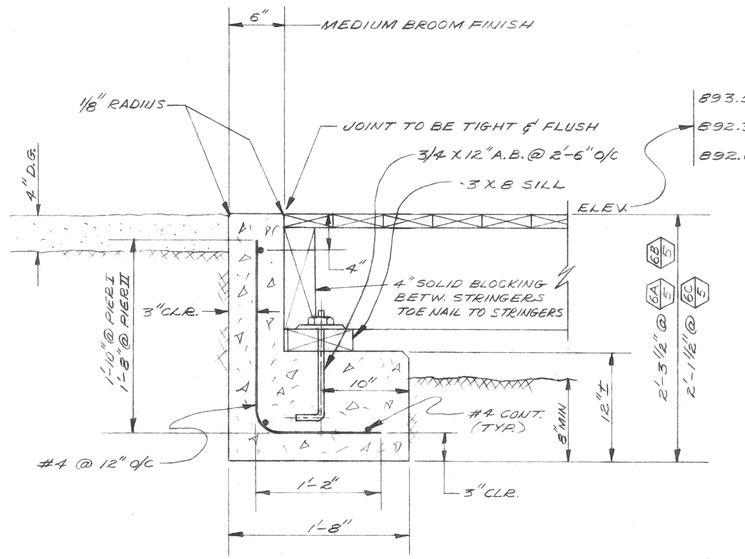

6/5 6A/5 6B/5 6C/5 SECTION ~ CONCRETE FOOTING
SCALE: 1½"=1'-0"

RECEIVED
OCT 23 1989
PARK & RECREATION DEPARTMENT

RECEIVED
NOV 3 1989
PARK & RECREATION DEPARTMENT

CITY OF RIVERSIDE, CALIFORNIA
THIS IS TO CERTIFY THAT THESE PLANS HAVE BEEN APPROVED BY THE PARK & RECREATION DEPARTMENT. ANY CHANGE OR ADDITION SUBSEQUENT TO SUCH APPROVAL DOES NOT RELIEVE THE CONTRACTOR FROM COMPLIANCE WITH ALL LAW OF THE CITY NOR DOES IT AUTHORIZE VIOLATION OF ANY LAW OR REGULATION OF ANY KIND. THIS IS NOT A PERMIT REQUIRING CORRECTION OF ANY ERROR OR OMISSION IN THESE PLANS. THIS IS NOT AN APPROVAL OF ANY WORK REQUIRING A SEPARATE PERMIT UNDER THE LAW OF THIS CITY.

Suspense Set
100%

DON HELLMERS ENGINEERING
SAN PEDRO, CA. (213) 831-0808

DRAWN VJR	SCALE NOTED
CHECKED DDH	JOB NO. 88240
APP'D	DATE 12-20-88

FAIRMONT PARK FISHING PIER

PIER NO. I & II

STRUCTURAL DETAILS

DWG NO. 5

BISHOP GRAPHICS/ACCUPRESS
REORDER NO. A40549

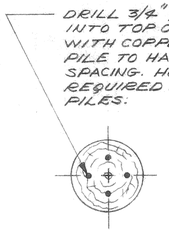

PLAN

3/5 PILE TOP TREATMENT
NO SCALE

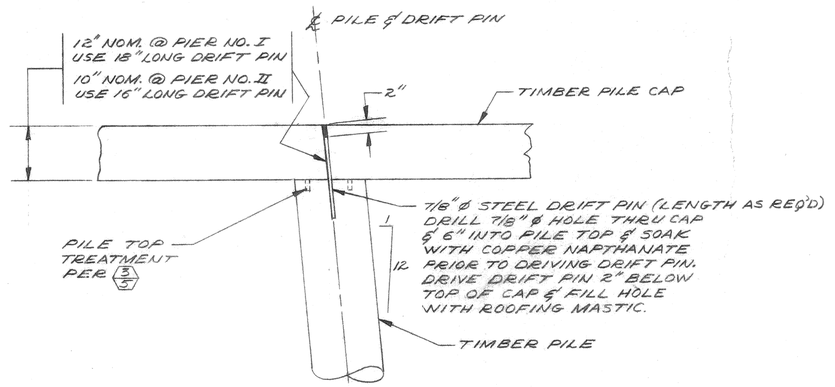

ELEV.

2/5 DETAIL ~ PILE TOP CONN.
SCALE: 1 1/2" = 1'-0"

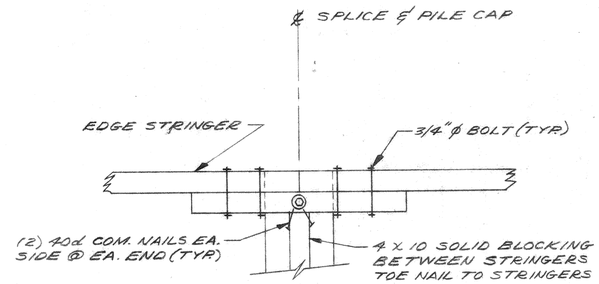

PLAN

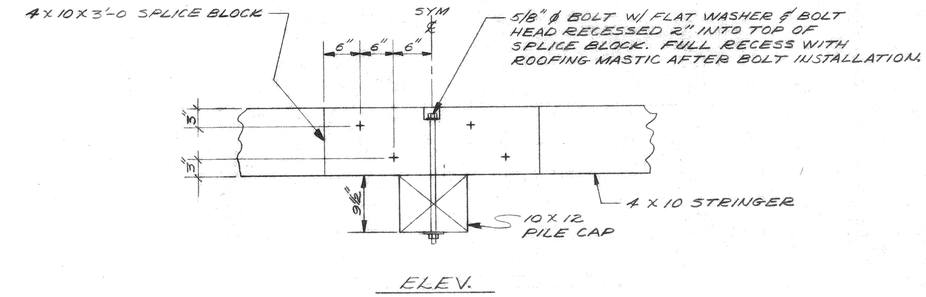

ELEV.

1/5 EDGE STRINGER SPLICE ~ PIER II
SCALE: 1" = 1'-0"

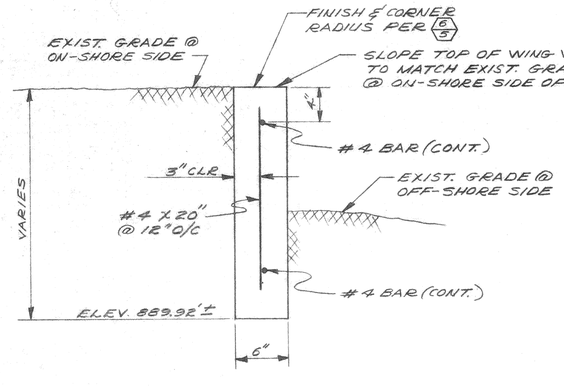

4/5 SECTION ~ WING WALL @ PIER II
SCALE: 1 1/2" = 1'-0"

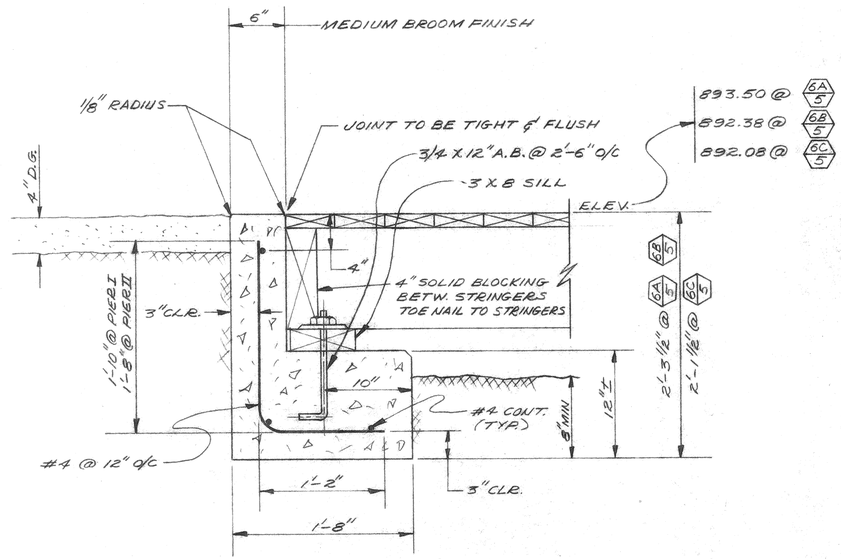

6/5 6A/5 6B/5 6C/5 SECTION ~ CONCRETE FOOTING
SCALE: 1 1/2" = 1'-0"

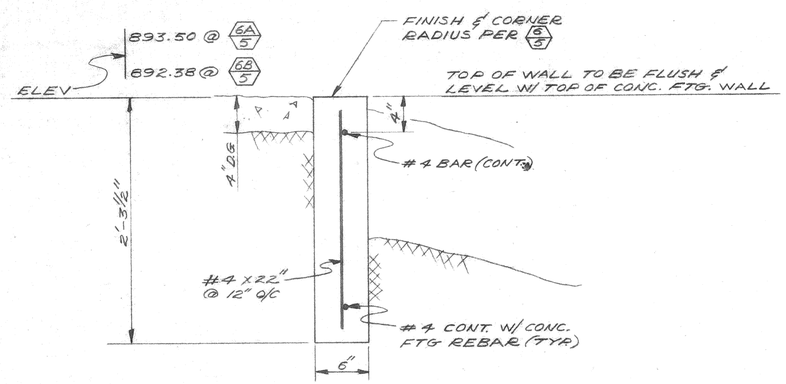

5/5 SECTION ~ WING WALL @ PIER I
SCALE: 1 1/2" = 1'-0"

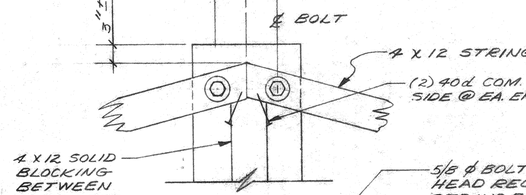

PLAN

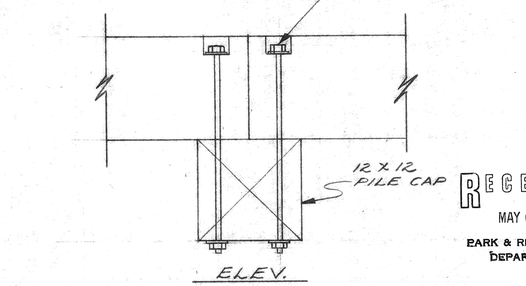

ELEV.

7/5 EDGE STRINGER SPLICE ~ PIER I
SCALE: 1 1/2" = 1'-0"

RECEIVED
MAY 02 1989
PARK & RECREATION DEPARTMENT

REGISTERED PROFESSIONAL ENGINEER
EMIL D. HELLMERS
RCE 14864
MAR. 31 1989
CIVIL
STATE OF CALIFORNIA

DON HELLMERS ENGINEERING, SAN PEDRO, CA. (213) 831-0888	FAIRMONT PARK FISHING PIER	
DRAWN VJZ / SCALE NOTED	PIER NO. I & II	DWG. NO. 5
CHECKED DDH / JOB NO. 88240	STRUCTURAL DETAILS	
APP'D / DATE 12-20-88		

BISHOP GRAPHICS/ACCUPRESS
REORDER NO. A45549

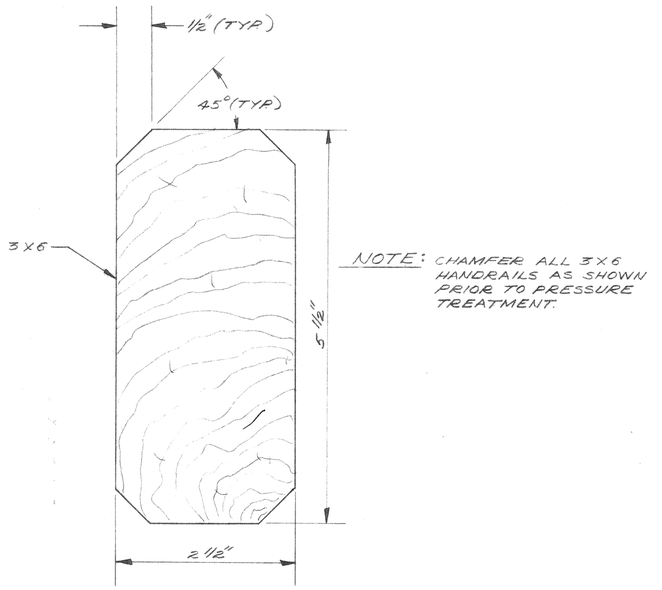

NOTE: CHAMFER ALL 3 X 6 HANDRAILS AS SHOWN PRIOR TO PRESSURE TREATMENT.

3/6 SECTION ~ HORIZ. HANDRAIL
SCALE: FULL

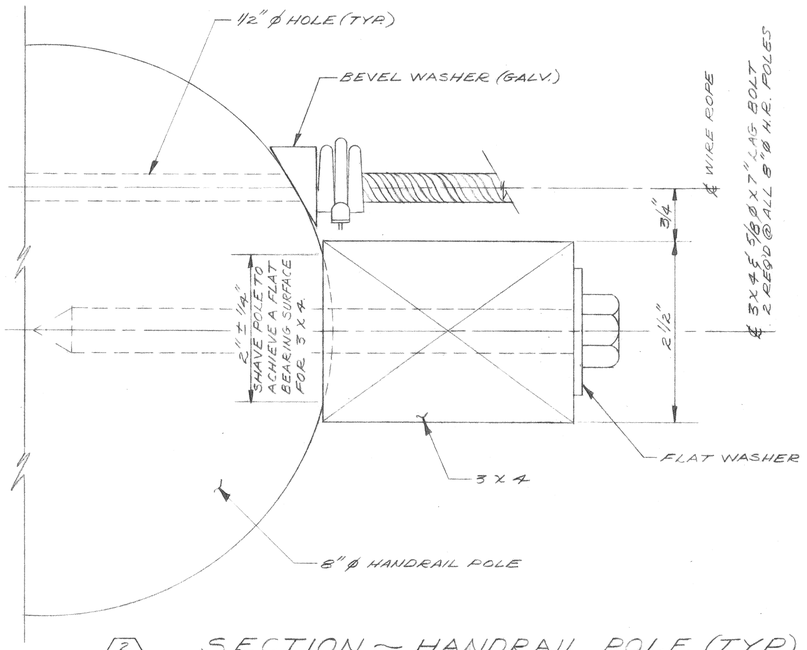

2/6 SECTION ~ HANDRAIL POLE (TYP.)
SCALE: FULL

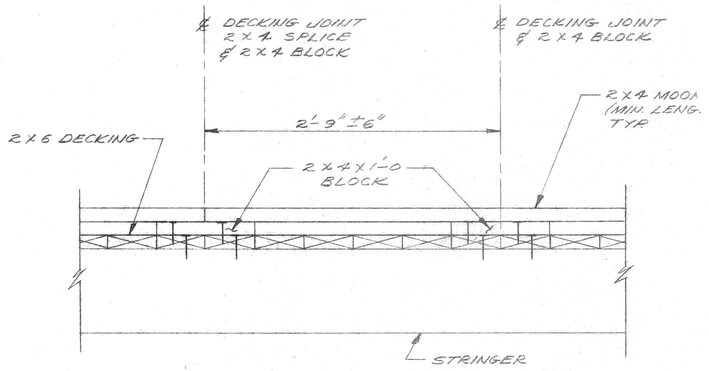

ELEVATION
SCALE: 1½"=1'-0"

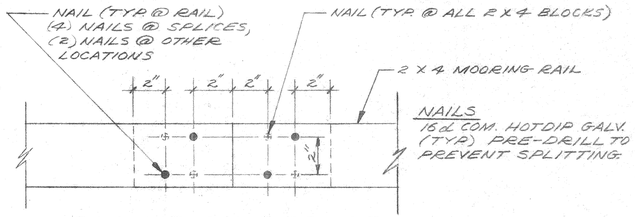

PLAN @ 2 X 4 SPLICE
SCALE: 3"=1'-0"

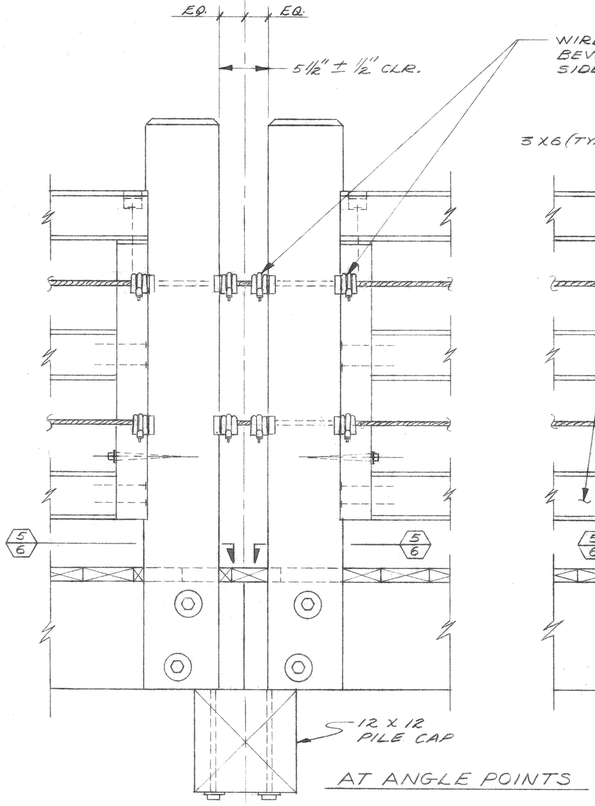

AT ANGLE POINTS

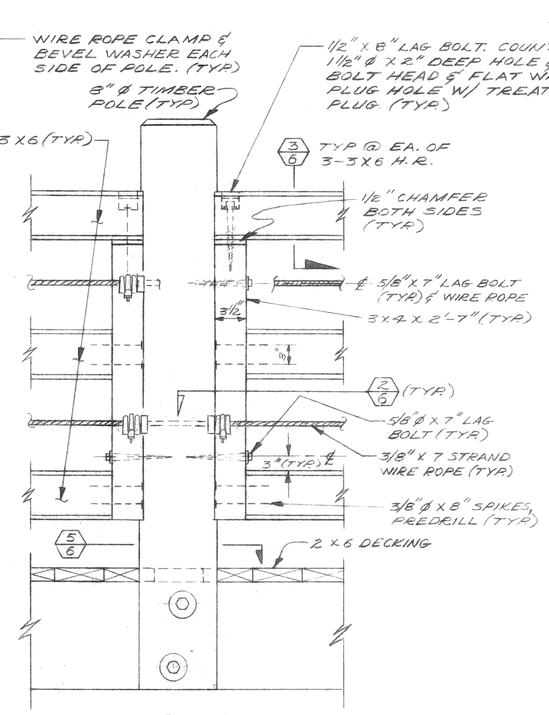

TYPICAL

4/6 ELEVATION ~ HANDRAIL
SCALE: 1½"=1'-0"

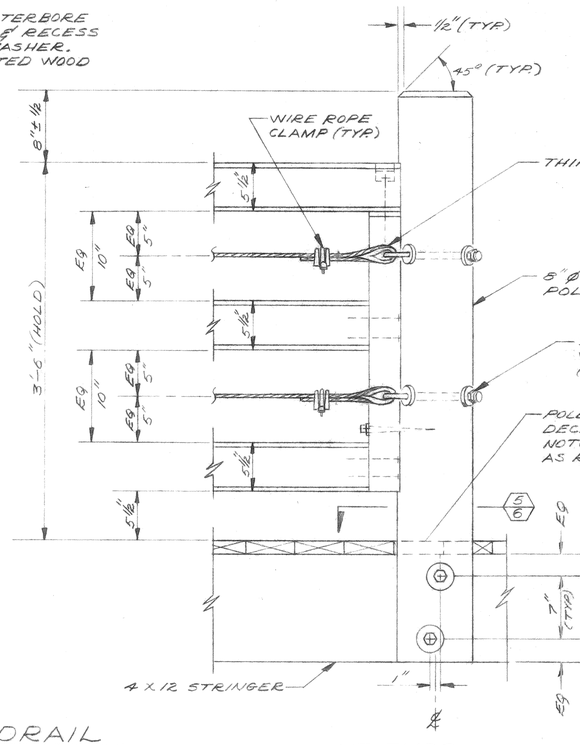

AT ENDS

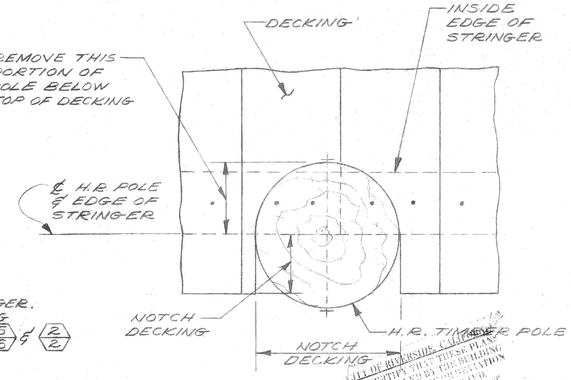

5/6 SECTION THRU POLE
SCALE:

Suspense Set
100%

RECEIVED
OCT 23 1989
PARK & RECREATION DEPARTMENT

REGISTERED PROFESSIONAL ENGINEER DON D. HELLMERS No. 14864 MAR. 31 1989 CIVIL STATE OF CALIFORNIA

ALL RIGHTS RESERVED. COPYRIGHT © 1988 BY DON HELLMERS ENGINEERING. THIS PLAN IS THE PROPERTY OF DON HELLMERS ENGINEERING AND IS NOT TO BE REPRODUCED, CHANGED OR COPIED IN ANY FORM OR MANNER WHATSOEVER NOR ASSIGNED TO ANY THIRD PARTY WITHOUT FIRST OBTAINING THE EXPRESS WRITTEN PERMISSION AND CONSENT OF DON HELLMERS ENGINEERING. ANY UNAUTHORIZED USE OF THESE PLANS IS TO BE PROSECUTED TO THE FULL EXTENT OF THE LAW. DON HELLMERS ENGINEERING WILL NOT BE RESPONSIBLE FOR ANY CHANGES MADE TO THESE PLANS BY ANYONE OTHER THAN DON HELLMERS ENGINEERING. THE REUSE OF THESE PLANS BY THE OWNER OR BY ANYONE ELSE FOR ANY OTHER PROJECT OR ADDITIONS TO THIS PROJECT OR ALTERATIONS TO THIS PROJECT WITHOUT THE EXPRESS WRITTEN PERMISSION AND CONSENT OF DON HELLMERS ENGINEERING SHALL BE AT THE OWNER'S OR REUSER'S SOLE RISK AND WITHOUT LIABILITY TO DON HELLMERS ENGINEERING. THE OWNER OR REUSER SHALL INDEMNIFY AND HOLD HARMLESS DON HELLMERS ENGINEERING FROM ALL CLAIMS, DAMAGES, LOSSES AND EXPENSES ARISING OUT OF OR RESULTING THEREFROM. THIS PLAN IS NOT TO BE USED FOR ANY PURPOSE OR ON ANY PROJECT UNLESS AND UNTIL A SEPARATE PERMIT IS ISSUED BY THE CITY.

DON HELLMERS ENGINEERING		FAIRMONT PARK FISHING PIER
SAN PEDRO, CA. (213) 831-0608		PIER NO. I & II
DRAWN VJE	SCALE NOTED	MOORING RAIL & HANDRAIL DETAILS
CHECKED DDH	JOB NO 88240	DWG NO 6
APP'D	DATE 12-20-88	

BISHOP GRAPHICS/ACCUPRESS
REORDER NO. A45348

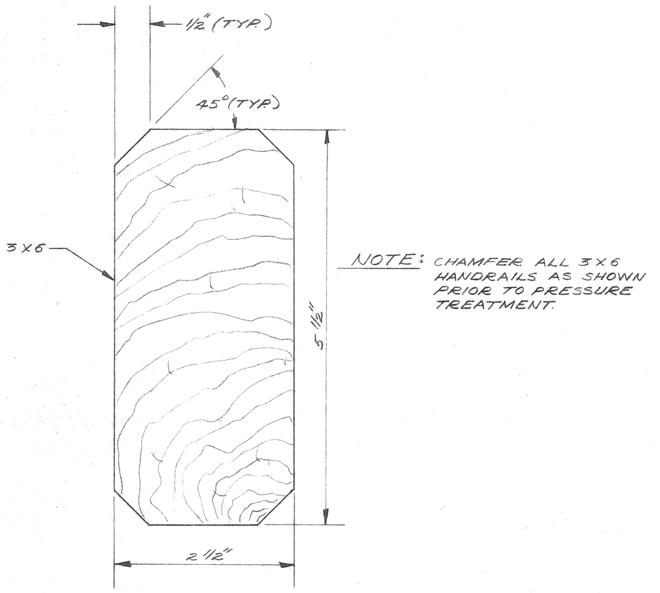

NOTE: CHAMFER ALL 3 X 6 HANDRAILS AS SHOWN PRIOR TO PRESSURE TREATMENT.

3/6 SECTION ~ HORIZ. HANDRAIL
SCALE: FULL

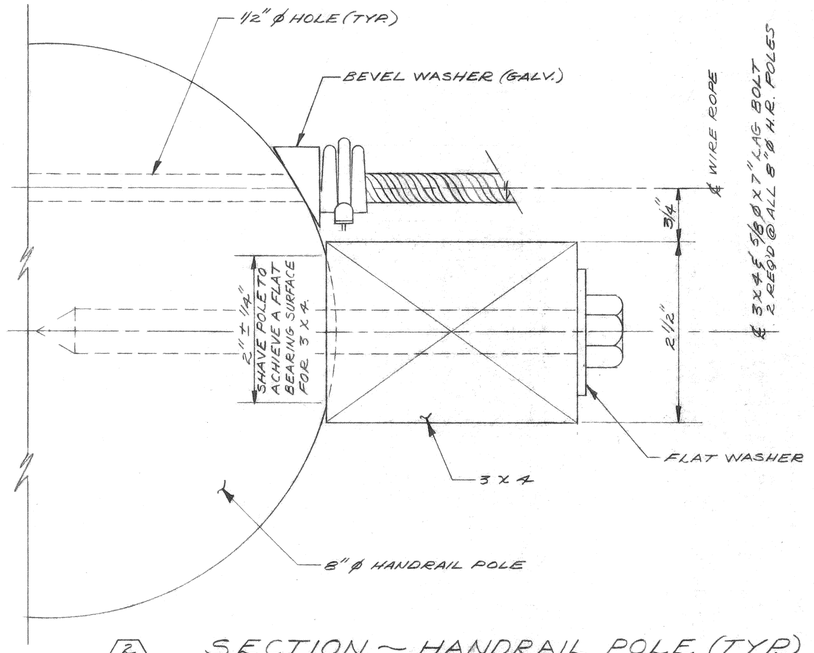

2/6 SECTION ~ HANDRAIL POLE (TYP.)
SCALE: FULL

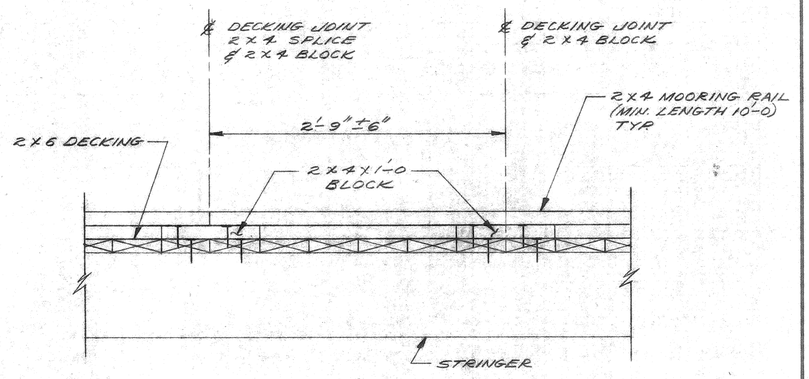

ELEVATION
SCALE: 1½"=1'-0"

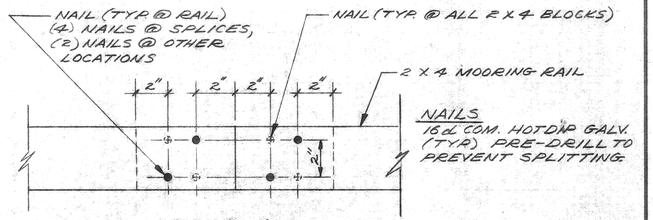

PLAN @ 2 X 4 SPLICE
SCALE: 3"=1'-0"

1/6 MOORING RAIL SYSTEM
SCALE: NOTED

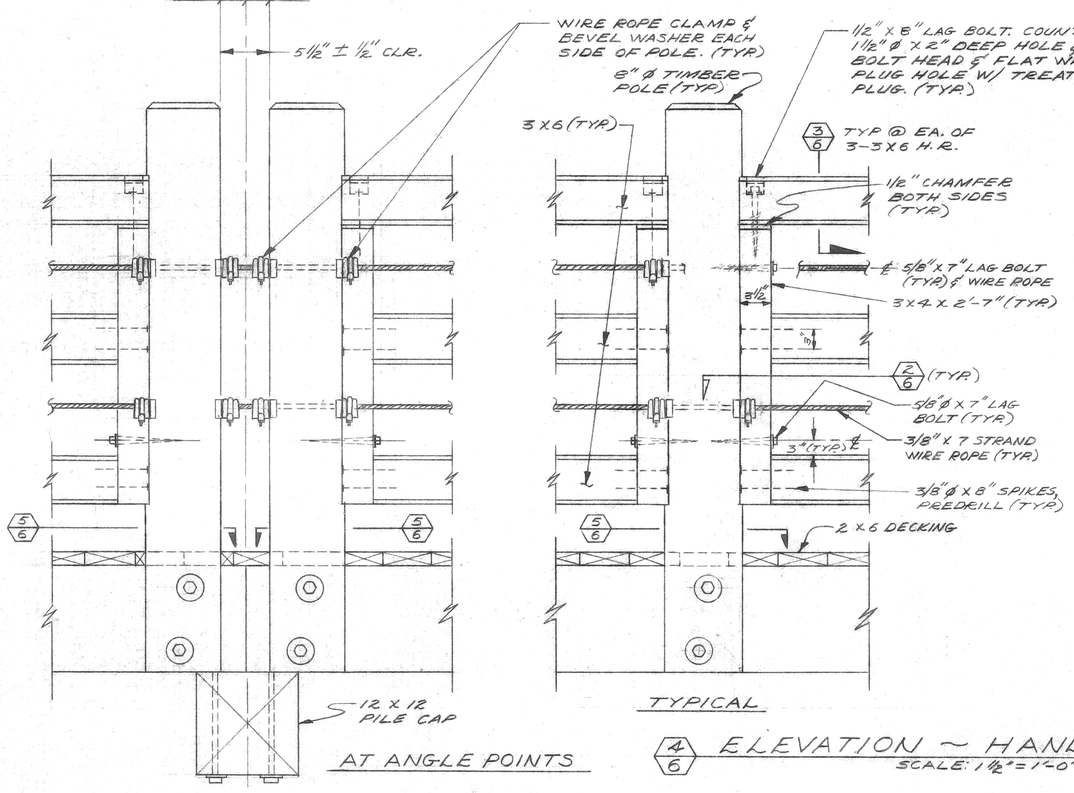

AT ANGLE POINTS

TYPICAL

4/6 ELEVATION ~ HANDRAIL
SCALE: 1½"=1'-0"

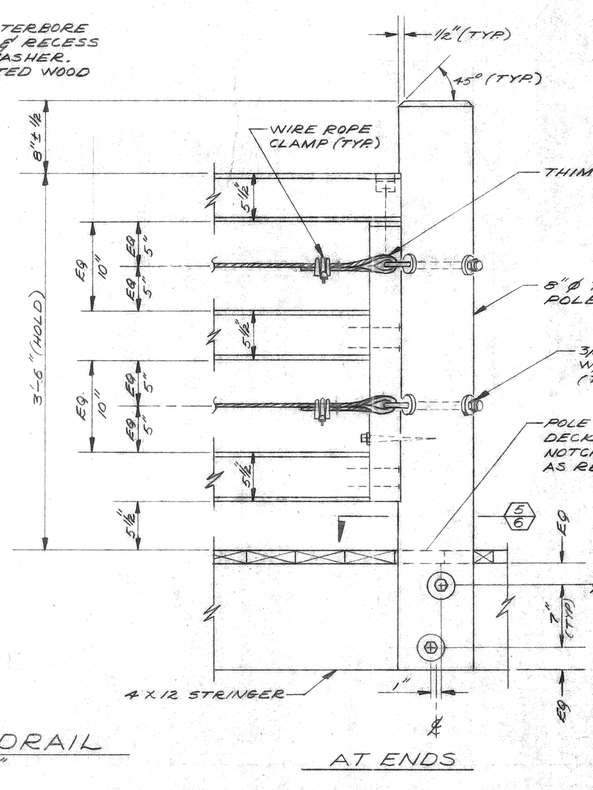

AT ENDS

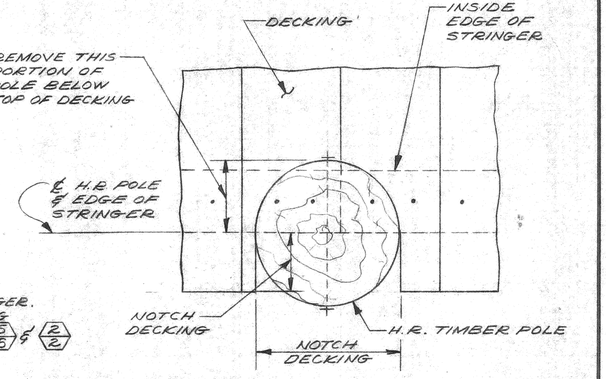

5/6 SECTION ~ H.R. POLE
SCALE: 3"=1'-0"

REGISTERED PROFESSIONAL ENGINEER JAMES D. HELLMERS RE 14864 MAR 31 1989 CIVIL STATE OF CALIFORNIA

RECEIVED
MAY 02 1989
PARK & RECREATION DEPARTMENT

DON HELLMERS ENGINEERING SAN PEDRO, CA. (213) 831-0800		FAIRMONT PARK FISHING PIER	
DRAWN VJE	SCALE NOTED	PIER NO. I & II	DWG. NO. 6
CHECKED DDH	JOB NO. 88240	MOORING RAIL & HANDRAIL DETAILS	
APP'D	DATE 12-20-88		

BISHOP GRAPHICS/ACCUPRESS
REORDER NO. A48549

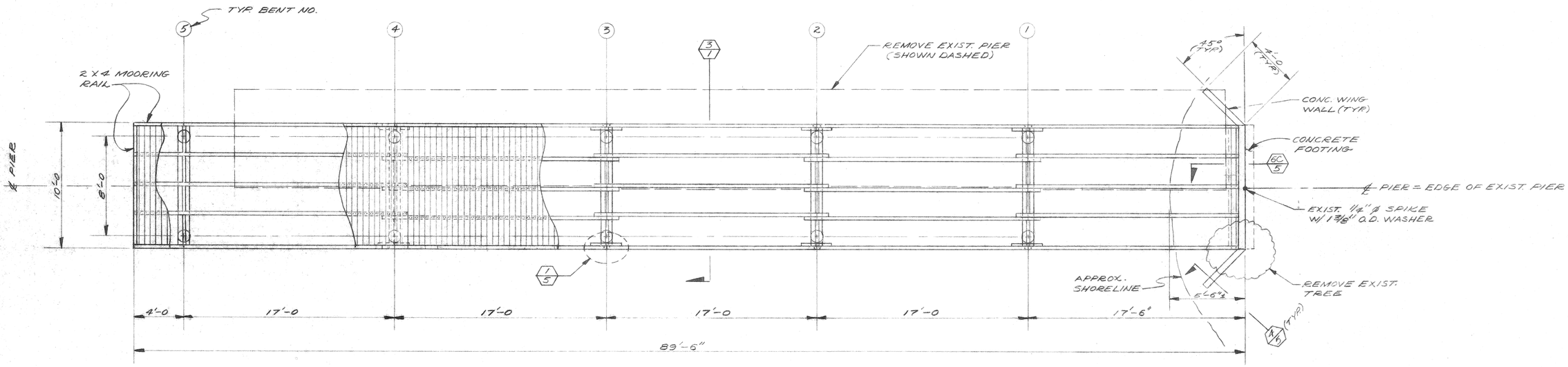

1/1 FRAMING PLAN
SCALE: 1/4" = 1'-0"

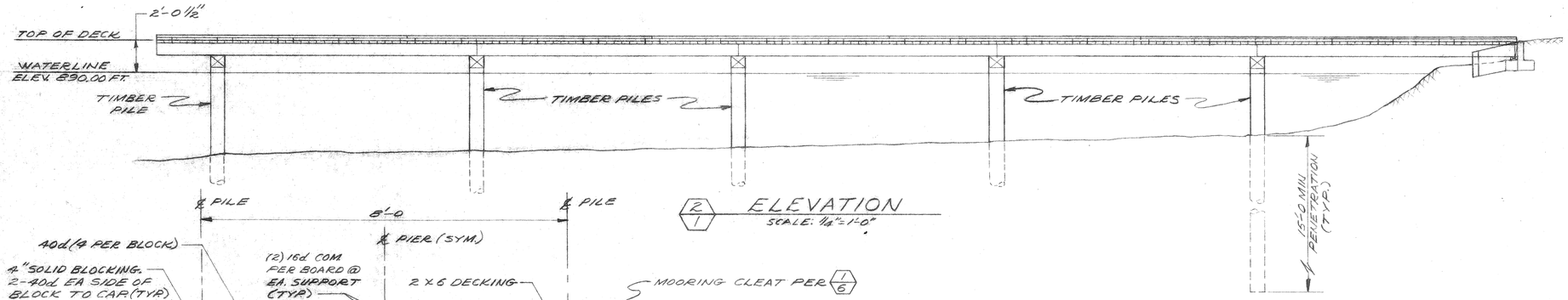

2/1 ELEVATION
SCALE: 1/4" = 1'-0"

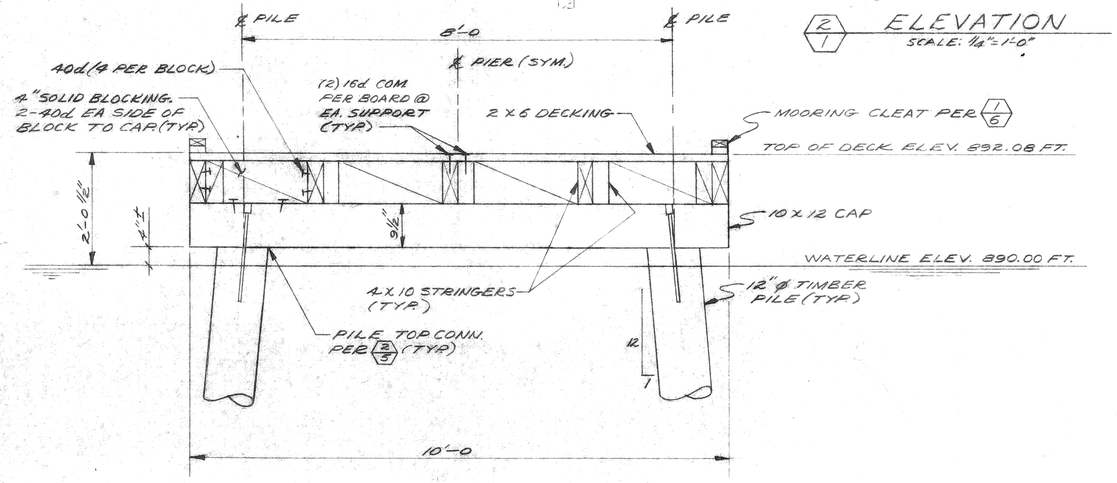

3/1 SECTION
SCALE: 3/4" = 1'-0"

GENERAL NOTES

1. Elevation datum = 890.0', design water surface elevation.
2. All construction shall be in accordance with the Project Specifications & all applicable codes, ordinances & regulations.
3. All materials shall be new.
4. Structural steel shall be A-36.
5. Bolts shall be ASTM A-307.
6. M.I. washers shall be used in all bolted wood connections unless noted otherwise.
7. Piles shall be Douglas Fir ASTM D 25-73 with 12" diameter butts. Piles shall be pressure treated in accordance with AWPA standards for fresh water piles with ACZA to a minimum retention of 1.0 pcf.
8. Piles shall be driven to a minimum penetration of 15 feet and to a minimum bearing capacity of 7.5 tons using the ENR pile driving formula. Tolerance shall be ± 3" maximum laterally from location shown on plan.
9. Decking and handrails shall be D.F. Sel.Str. All other lumber shall be D.F. No. 1.
10. All timber and all handrail poles shall be pressure treated with ACZA to 0.6 pcf., excepting horizontal handrails. Horizontal handrails shall be chamfered as required & then pressure treated with ACZA to 0.4 pcf. Horizontal handrails shall not be incised.
11. All timber shall be rough sawn excepting stringers shall be SIE; 10" stringers shall be SIE to 9-1/2", and 12" stringers shall be SIE to 11-1/2". Decking shall be S4S, and handrails shall be S4S and chamfered as shown.
12. Swab holes and cuts with copper napthanate per AWPA standard M4.
13. All steel hardware and fasteners (excepting drift pins) shall be hot dip galvanized to a minimum 2 oz./sq.ft. after fabrication. Nails shall be common, H.D. galvanized.
14. Cable shall be galvanized seven strand wire rope tensioned sufficiently to permit a max. deflection of 1" due to a 30 lb. force applied midway between handrail poles.
15. Concrete Mix: f'c shall be 3500 psi @ 28 days
    3/4" maximum aggregate size
    6.5 sacks cement/yd. (Type II)
    Slump: 2 to 4 inches

	Dry Weight Aggr. lbs.
Cement (6.5)	611
Sand	1,325
#2 Gravel	-
#3 Gravel	1,728
#4 Gravel	88
Water (max.)	39.0 gals.

RECEIVED
OCT 23 1989
PARK & RECREATION DEPARTMENT

CITY OF RIVERSIDE, CALIFORNIA
THIS IS TO CERTIFY THAT THESE PLANS HAVE BEEN APPROVED BY THE BUILDING OFFICIAL AND NO CHANGE OR DEVIATION THEREFROM SHALL BE PERMITTED. HOWEVER, THIS APPROVAL DOES NOT AUTHORIZE VIOLATION OR CANCELLATION OF ANY LAW OF THE CITY NOR DOES IT PREVENT REQUIRING CORRECTION OF ANY ERROR ON THE PLANS. THIS IS NOT AN APPROVAL OF ANY WORK REQUIRING A SEPARATE PERMIT UNDER THE LAW OF THE CITY

REGISTERED PROFESSIONAL ENGINEER
EMIL D. HELLMERS
C 14864
MAR. 31 1990
CIVIL
STATE OF CALIFORNIA

Suspense Set
100%

RECEIVED
JAN 13 1989
PARK & RECREATION DEPARTMENT

DON HELLMERS ENGINEERING, SAN PEDRO, CA. (213) 831-0608		FAIRMONT PARK FISHING PIER	
DRAWN VJZ	SCALE NOTED	PIER NO. II	DWG. NO. 1
CHECKED D.D.H.	JOB NO. 88240	PLAN, ELEVATION & SECTION	
APP'D	DATE 12/20/88		

BISHOP GRAPHICS/ACCUPRESS REORDER NO. A45549

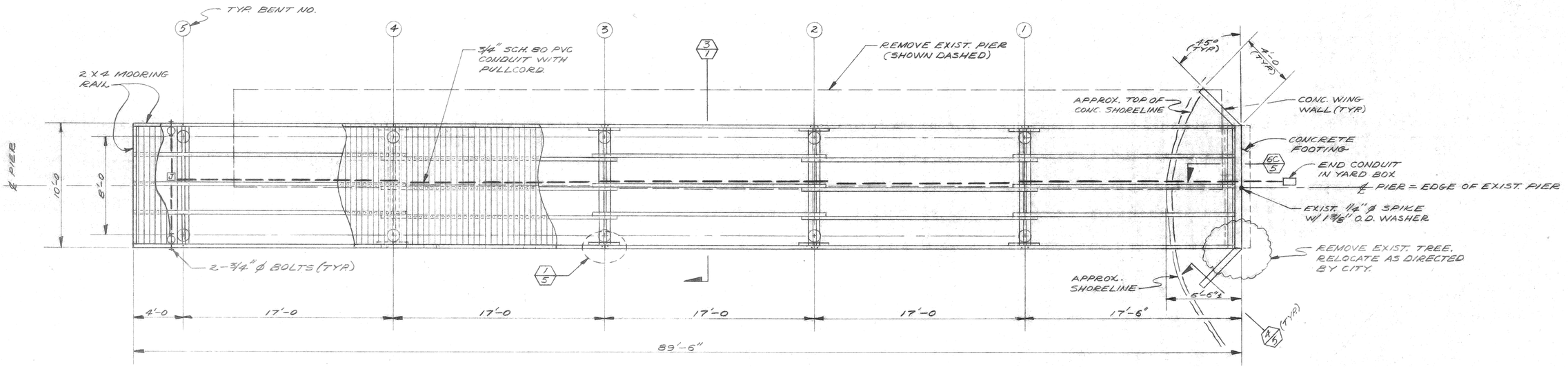

3/1 FRAMING PLAN
SCALE: 1/4"=1'-0"

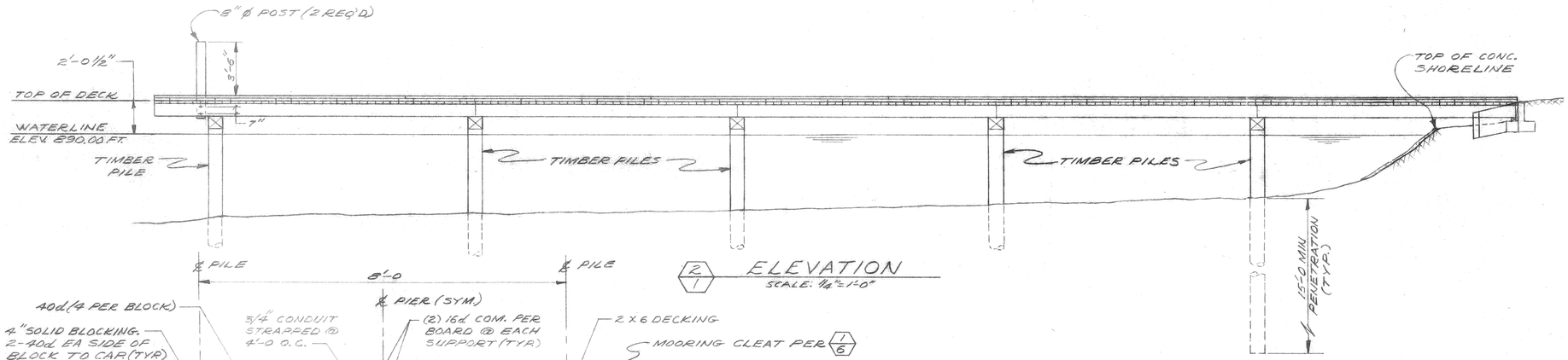

2/1 ELEVATION
SCALE: 1/4"=1'-0"

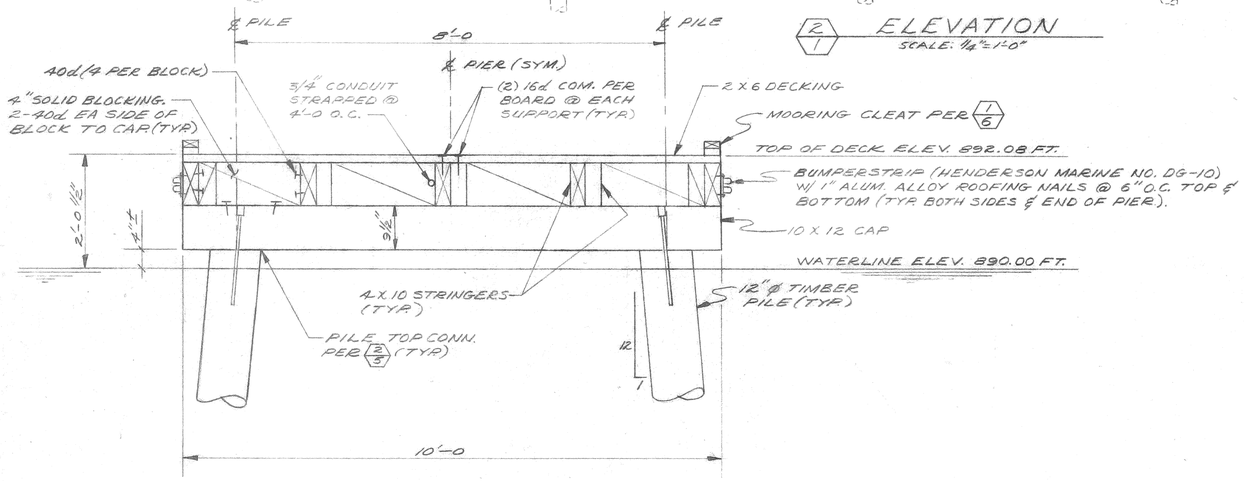

3/1 SECTION
SCALE: 3/4"=1'-0"

GENERAL NOTES

1. Elevation datum = 890.0', design water surface elevation.
2. All construction shall be in accordance with the Project Specifications & all applicable codes, ordinances & regulations.
3. All materials shall be new.
4. Structural steel shall be A-36.
5. Bolts shall be ASTM A-307.
6. M.I. washers shall be used in all bolted wood connections unless noted otherwise.
7. Piles shall be Douglas Fir ASTM D 25-73 with 12" diameter butts. Piles shall be pressure treated in accordance with AWPA standards for fresh water piles with ACZA to a minimum retention of 1.0 pcf.
8. Piles shall be driven to a minimum penetration of 15 feet and to a minimum bearing capacity of 7.5 tons using the ENR pile driving formula. Tolerance shall be ± 3" maximum laterally from location shown on plan.
9. Decking and handrails shall be D.F. Sel.Str. All other lumber shall be D.F. No. 1.
10. All timber and all handrail poles shall be pressure treated with ACZA to 0.6 pcf., excepting horizontal handrails. Horizontal handrails shall be chamfered as required & then pressure treated with ACZA to 0.4 pcf. Horizontal handrails shall not be incised.
11. All timber shall be rough sawn excepting stringers shall be S1E; 10" stringers shall be S1E to 9-1/2", and 12" stringers shall be S1E to 11-1/2". Decking shall be S4S, and handrails shall be S4S and chamfered as shown.
12. Swab holes and cuts with copper napthanate per AWPA standard M4.
13. All steel hardware and fasteners (excepting drift pins) shall be hot dip galvanized to a minimum 2 oz./sq.ft. after fabrication. Nails shall be common, H.D. galvanized.
14. Cable shall be galvanized seven strand wire rope tensioned sufficiently to permit a max. deflection of 1" due to a 30 lb. force applied midway between handrail poles.
15. Concrete Mix: f'c shall be 3500 psi @ 28 days.
    3/4" maximum aggregate size
    6.5 sacks cement/yd. (Type II)
    Slump: 2 to 4 inches

	Dry Weight Aggregate lbs.
Cement (6.5)	611
Sand	1,325
#2 Gravel	-
#3 Gravel	1,728
#4 Gravel	88
Water (max.)	39.0 gals.

REGISTERED PROFESSIONAL ENGINEER DON D. HELLMERS C 11864 MAR. 31 1990 CIVIL STATE OF CALIFORNIA

RECEIVED
MAY 02 1989
PARK & RECREATION DEPARTMENT

DON HELLMERS ENGINEERING
SAN PEDRO, CA. (213) 831-0808

DRAWN VJF	SCALE NOTED
CHECKED D.D.H.	JOB NO. 88240
APP'D	DATE 12/20/88

FAIRMONT PARK FISHING PIER
PIER NO. II
PLAN, ELEVATION & SECTION
DWG. NO. 1 of 6

CUPRESS

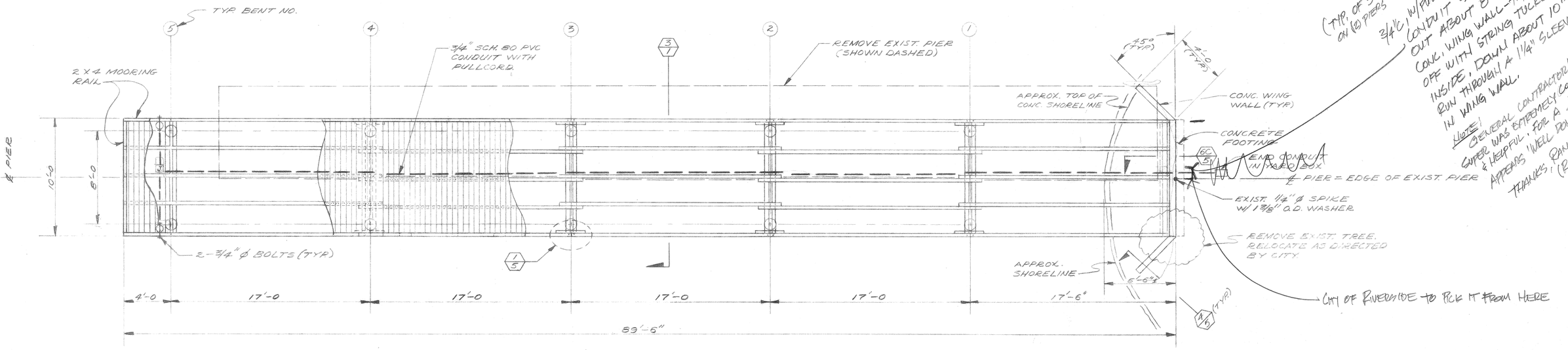

1/1 FRAMING PLAN
SCALE: 1/4"=1'-0"

(TYP. OF 3 LOCATIONS) 2
3/4"C. W/PULL STRING, CONDUIT STUBBED OUT ABOUT 8" FROM CONC. WING WALL-TAPED OFF WITH STRING TUCKED INSIDE, DOWN ABOUT 10"± RUN THROUGH A 1 1/4" SLEEVE IN WING WALL.

NOTE: GENERAL CONTRACTOR'S CREW WAS EXTREMELY COOPERATIVE & HELPFUL, FOR A JOB THAT APPEARS "WELL DONE"
THANKS, RANDY
(R.E.S.)

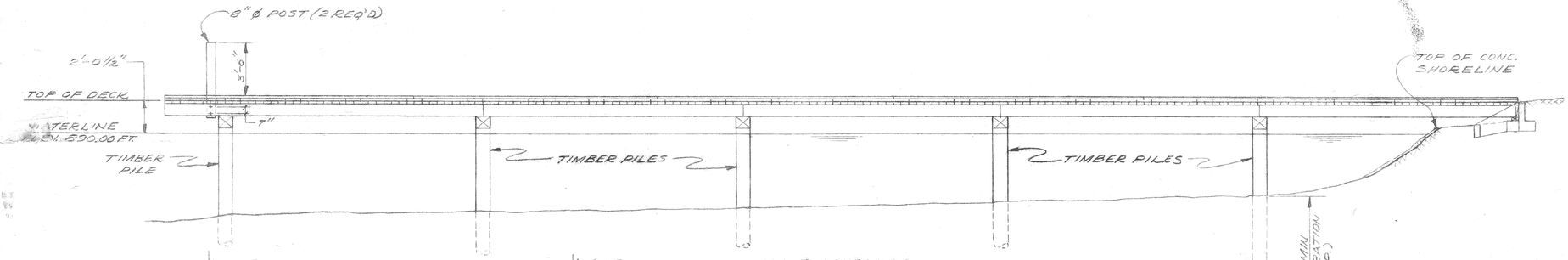

2/1 ELEVATION
SCALE: 1/4"=1'-0"

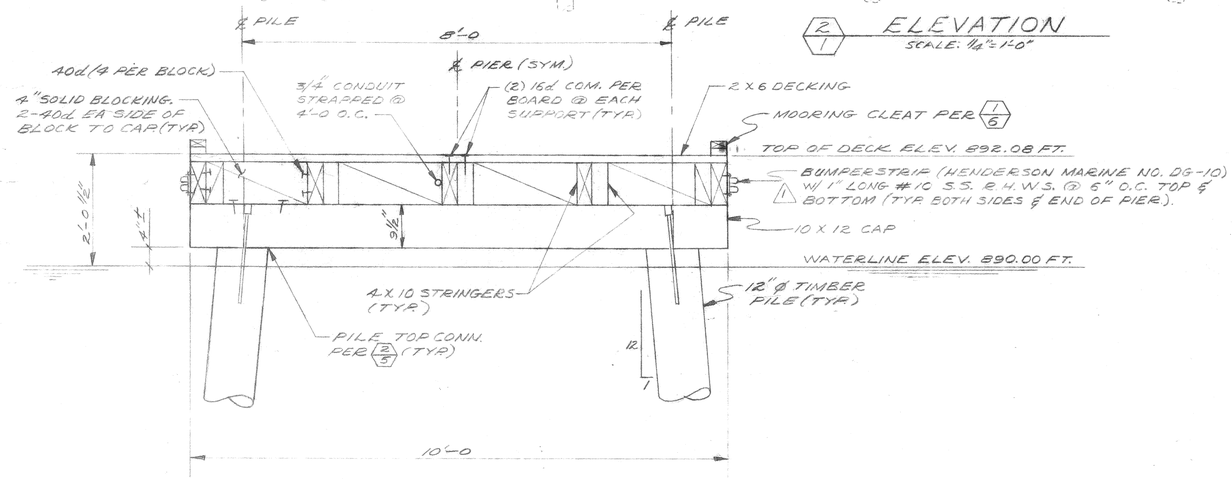

3/1 SECTION
SCALE: 3/4"=1'-0"

GENERAL NOTES

1. Elevation datum = 890.0', design water surface elevation.
2. All construction shall be in accordance with the Project Specifications & all applicable codes, ordinances & regulations.
3. All materials shall be new.
4. Structural steel shall be A-36.
5. Bolts shall be ASTM A-307.
6. M.I. washers shall be used in all bolt[illegible]od connections unless noted otherwise.
7. Piles shall be Douglas Fir ASTM D 25-73 w[illegible]12" diameter butts. Piles shall be pressure treated in accordance [illegible]th AWPA standards for fresh water piles with ACZA to a minimum retention of 1.0 pcf.
8. Piles shall be driven to a minimum penetration of 15 feet and to a minimum bearing capacity of 7.5 tons using the ENR pile driving formula. Tolerance shall be ± 3" maximum laterally from location shown on plan.
9. Decking and handrails shall be D.F. Sel.Str. All other lumber shall be D.F. No. 1.
10. All timber and all handrail poles shall be pressure treated with ACZA to 0.6 pcf., excepting horizontal handrails. Horizontal handrails shall be chamfered as required & then pressure treated with ACZA to 0.4 pcf. Horizontal handrails shall not be incised.
11. All timber shall be rough sawn excepting stringers shall be SIE; 10" stringers shall be SIE to 9-1/2", and 12" stringers shall be SIE to 11-1/2". Decking shall be S4S, and handrails shall be S4S and chamfered as shown.
12. Swab holes and cuts with copper napthanate per AWPA standard M4.
13. All steel hardware and fasteners (excepting drift pins) shall be hot dip galvanized to a minimum 2 oz./sq.ft. after fabrication. Nails shall be common, H.D. galvanized.
14. Cable shall be galvanized seven strand wire rope tensioned sufficiently to permit a max. deflection of 1" due to a 30 lb. force applied midway between handrail poles.
15. Concrete Mix: f'c shall be 3500 psi @ 28 days.
    3/4" maximum aggregate size
    6.5 sacks cement/yd. (Type II)
    Slump: 2 to 4 inches

	Dry Weight Aggregate lbs.
Cement (6.5)	611
Sand	1,325
#2 Gravel	-
#3 Gravel	1,728
#4 Gravel	88
Water (max.)	39.0 gals.

REGISTERED PROFESSIONAL ENGINEER JOHN D. HELLMERS No. C 15021 MAR 31 1990 CIVIL STATE OF CALIFORNIA

RECEIVED
OCT 23 1989
PARK & RECREATION DEPARTMENT

AS-BUILT 10/23/89

1	SCREWS @ BUMPERSTRIP	03/1/89	DDH
NO.	REVISION	DATE	APP'D

DON HELLMERS ENGINEERING
SAN PEDRO, CA. (213) 831-0608

DRAWN	JUE	SCALE	NOTED
CHECKED	D.D.H.	JOB NO	88240
APP'D		DATE	12/20/88

FAIRMONT PARK FISHING PIER
PIER NO. II
PLAN, ELEVATION & SECTION
DWG. 1

DP GRAPHICS/ACCUPRESS
MICR NO. A43545