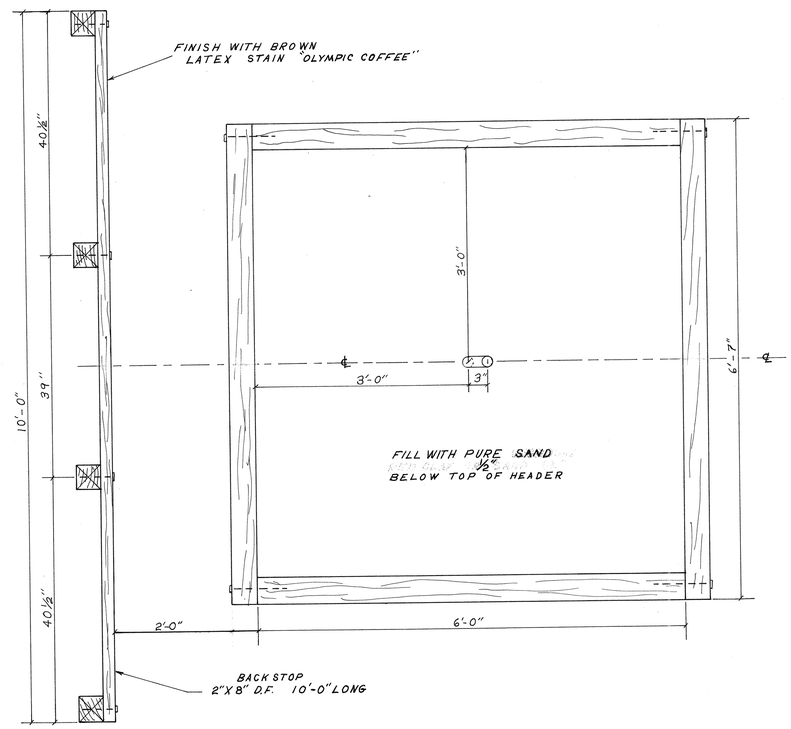

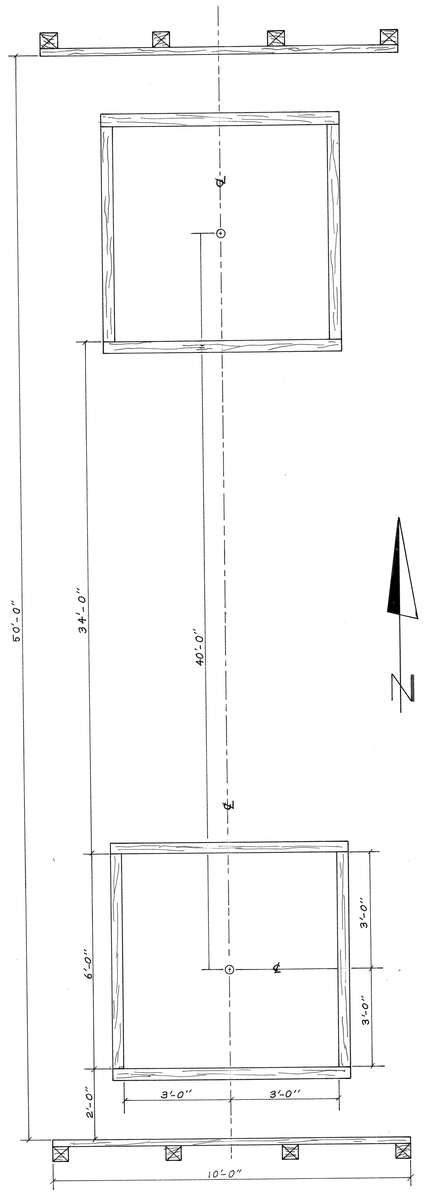

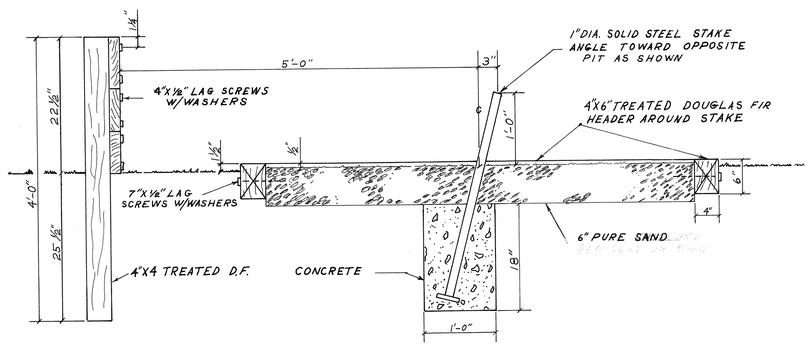

SECTION-HORSE SHOE PIT

SCALE 1" = 1'-0"

LAYOUT PLAN

SCALE ½" = 1'-0"

NOTES

MATERIAL LIST

6 - 2"X8"X10'-0" LONG DOUGLAS FIR
8 - 4"X4"X4'-0 TREATED D.F.
4 - 4"X6"X6'-0 TREATED D.F.
4 - 4"X6"X6'-7" TREATED D.F.
8 - 7" ½" DIA LAG SCREWS W/WASHERS
48 - 4"X½" DIA. LAG SCREWS W/WASHERS
2 - 1" DIA 3'-0" LONG STEEL RODS WITH WELDED PLATE
1 GAL. BROWN LATEX STAIN "OLYMPIC COFFEE"
3 - 90LB. BAGS READY CRETE
1⅓ YARD SAND

HORSESHOE PITS

DATE: 11/17/83	DRAWN: STEWART	SHEET: 1 of 1