BRIDGE PLAN TIMBER TOP
FAIRMOUNT PARK

Drawing No.	Sheet No.	Total Sheets	Field Book
1033-I	1	1	

C. E. M. 5-19-38 Lee Hodgson

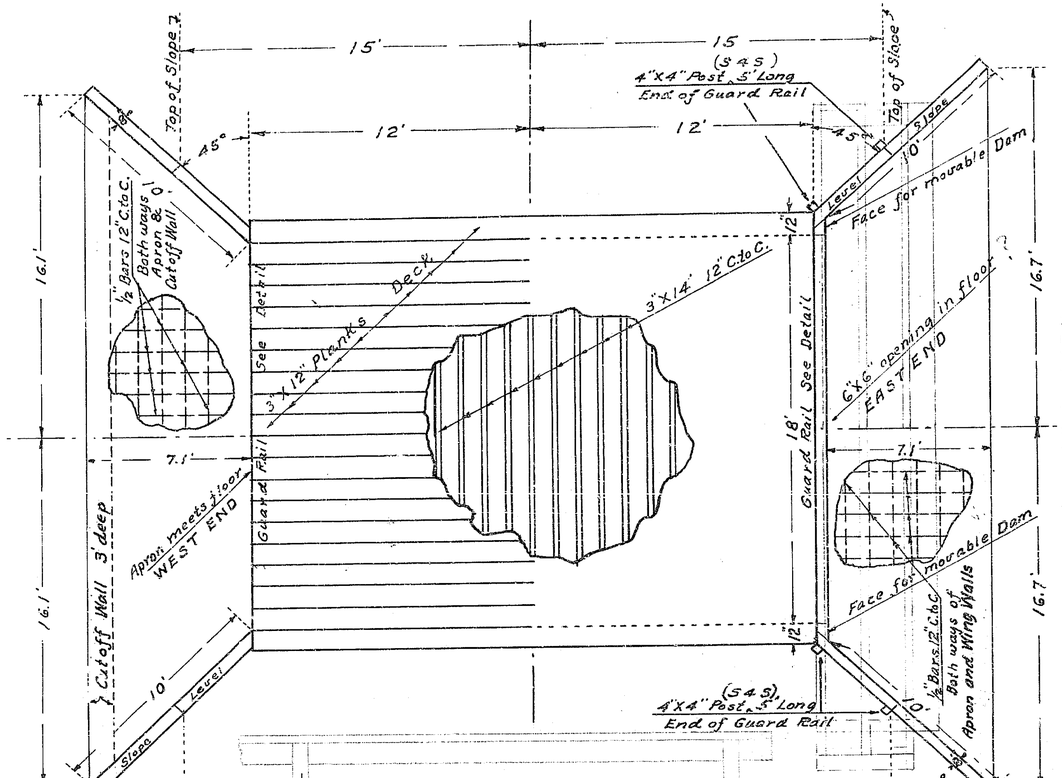

TRANSVERSE ½ SECTION

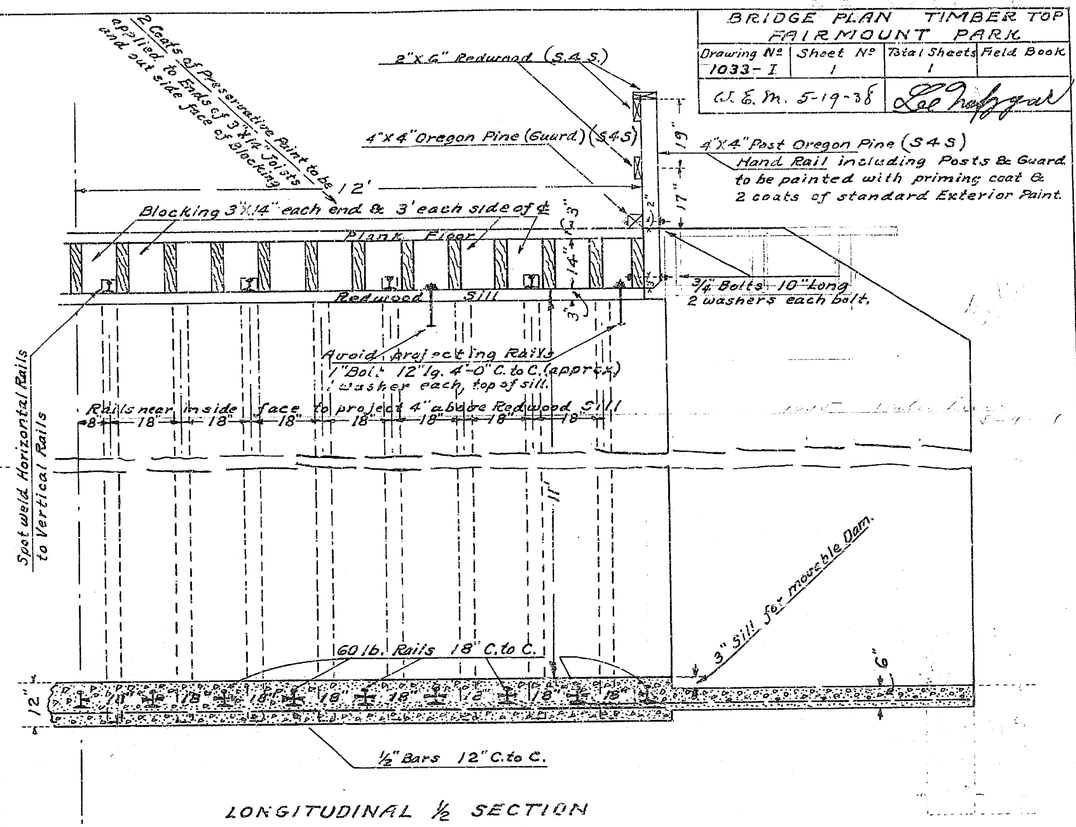

LONGITUDINAL ½ SECTION

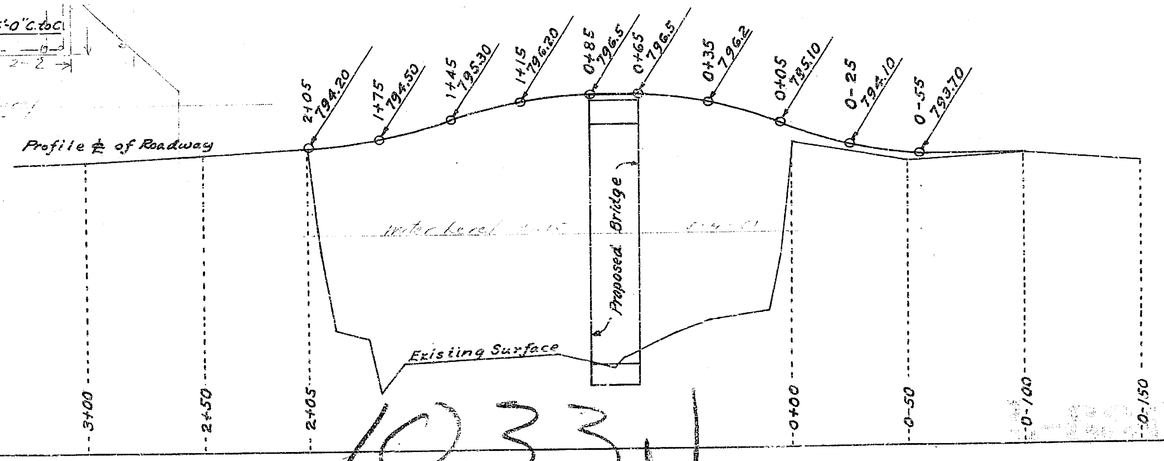

1033

DRAWING NUMBER
Fairmount
PLAN HOLD CORPORATION • IRVINE, CALIFORNIA
REORDER BY NUMBER 075AR
POSITION EDGE OF PRINT ON THIS LINE

DRAWING NUMBER
PLAN HOLD CORPORATION • IRVINE, CALIFORNIA
REORDER BY NUMBER 075AR
POSITION EDGE OF PRINT ON THIS LINE

DRAWING NUMBER
PLAN HOLD CORPORATION • IRVINE, CALIFORNIA
REORDER BY NUMBER 075AR
POSITION EDGE OF PRINT ON THIS LINE

DRAWING NUMBER
FA-[redacted] 5a
PLAN HOLD CORPORATION • IRVINE, CALIFORNIA
REORDER BY NUMBER 075AR
POSITION EDGE OF PRINT ON THIS LINE

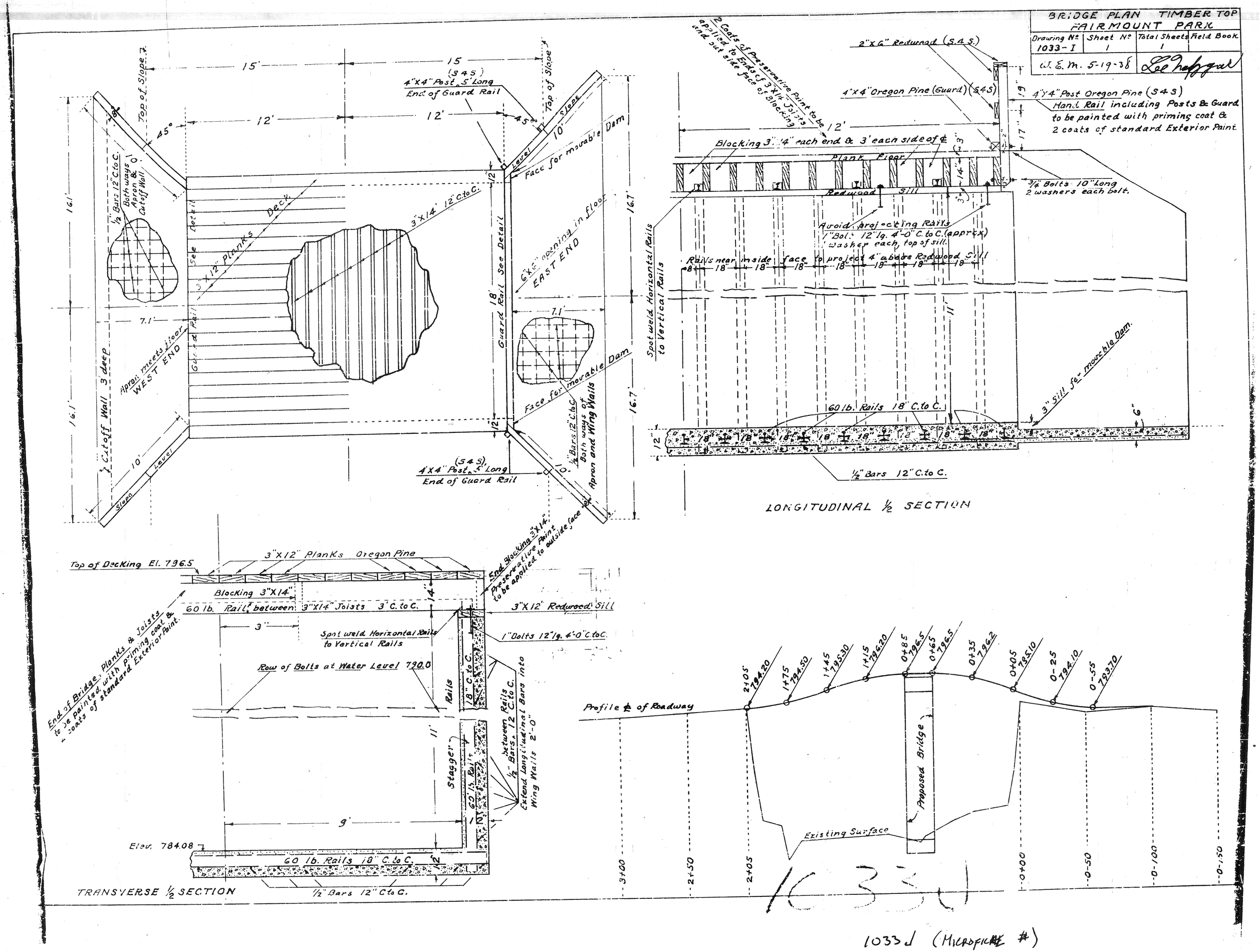

1033J (MICROFILM #)

DRAWING NUMBER
Fairmount
PLAN HOLD CORPORATION • IRVINE, CALIFORNIA
REORDER BY NUMBER 075AR
POSITION EDGE OF PRINT ON THIS LINE

DRAWING NUMBER
PLAN HOLD CORPORATION • IRVINE, CALIFORNIA
REORDER BY NUMBER 075AR
POSITION EDGE OF PRINT ON THIS LINE

DRAWING NUMBER
PLAN HOLD CORPORATION • IRVINE, CALIFORNIA
REORDER BY NUMBER 075AR
POSITION EDGE OF PRINT ON THIS LINE

DRAWING NUMBER
FA-[redacted]56
PLAN HOLD CORPORATION • IRVINE, CALIFORNIA
REORDER BY NUMBER 075AR
POSITION EDGE OF PRINT ON THIS LINE

FA-5

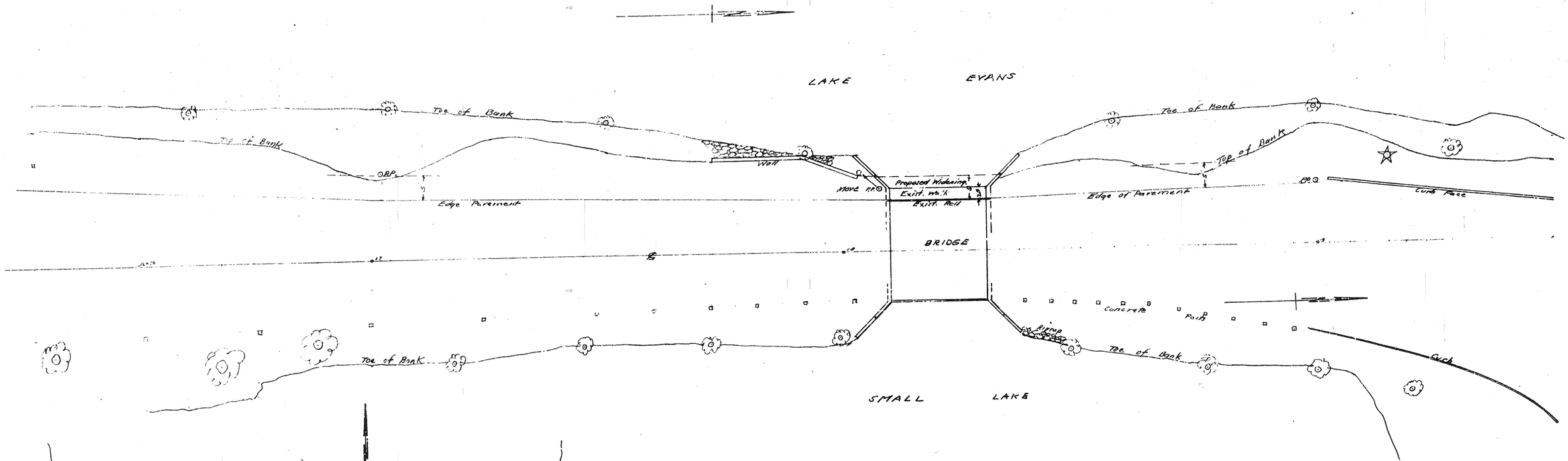

GENERAL LOCATION PLAN
Scale: 1in. = 10 ft.

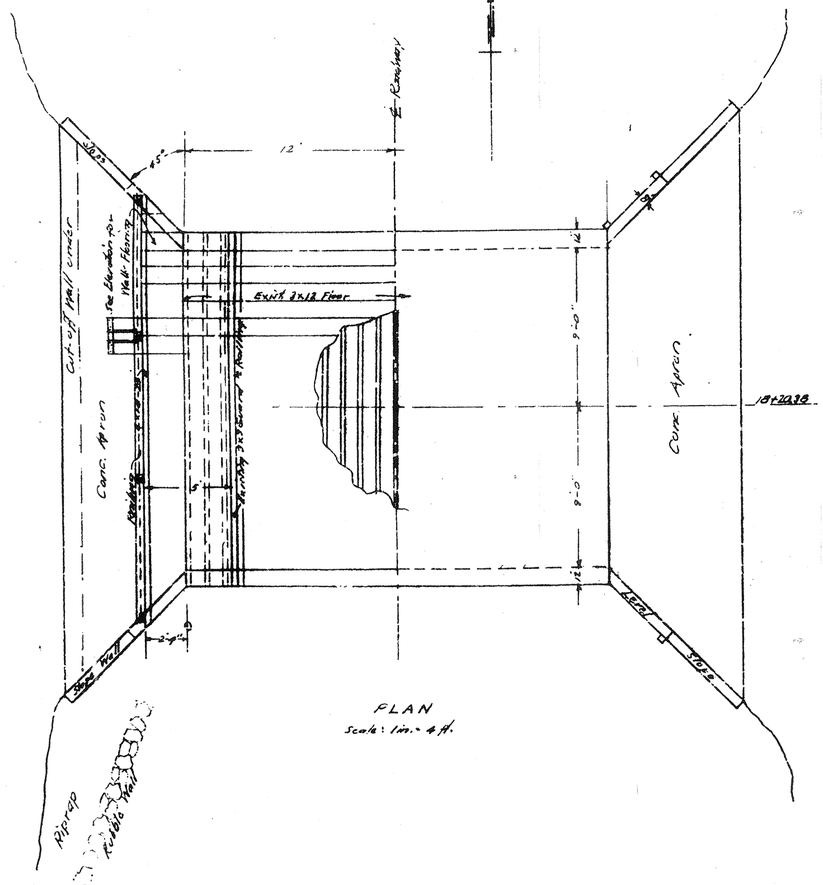

PLAN
Scale: 1in. = 4 ft.

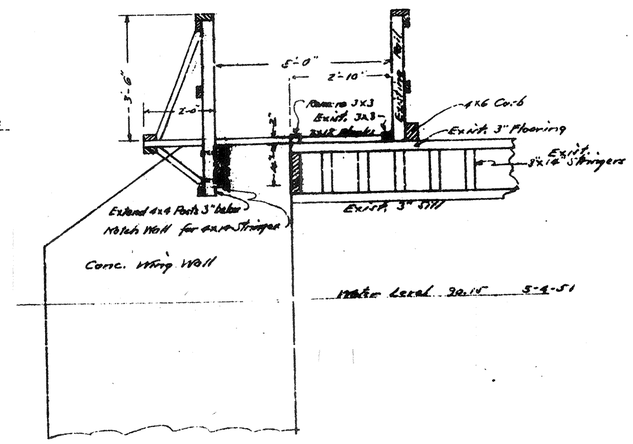

PART SECTION
Scale: 1in. = 2 ft.

PLAN No. 1033-M.

PLAT SHOWING PROPOSED WIDENING OF

FAIRMONT PARK BRIDGE

FOR PEDESTRIAN WALKWAY

F.B. 506-5

MAY 1951

Approved M. H. Irvine
REG. C.E. No. 3011 CITY ENGINEER

BILL OF MATERIAL

1 - 4"x14" - 24'		Stringer
40' B.M. 2x12 - 7'		Floor Planks for Post Bracing
168' B.M. - 2x12 - 5'		" "
26.66' B.M. 4x4 - 4'-11"	(4)	Rail Posts
48' B.M. 2x4 - 24'	(2)	Rails
12' B.M. 2x6 - 24'	(1)	" Top
8 - ½x10" Bolts with nuts & washers for Posts		
150# - 16 d spikes		
40' B.M. 4x6	(1)	Curb
12' B.M. 2x8		Bracing
5.4' B.M. 2x4		Seats
16' B.M. 2x12		Bridging

Cost Est.

Lumber	7.00
Hardware	1.00
Labor	140.00
	$ 220.00

10331

1033N

GENERAL NOTES:

1. CONCRETE SHALL BE 2,500 psi 28 DAY 3/4" MAXIMUM AGGREGATE
2. REINFORCING STEEL SHALL BE GRADE 40
3. ALL TIMBER SHALL BE SELECT STRUCTURAL GRADE D. F.
4. INSPECTION WILL BE PROVIDED BY RIVERSIDE PUBLIC WORKS DEPT.

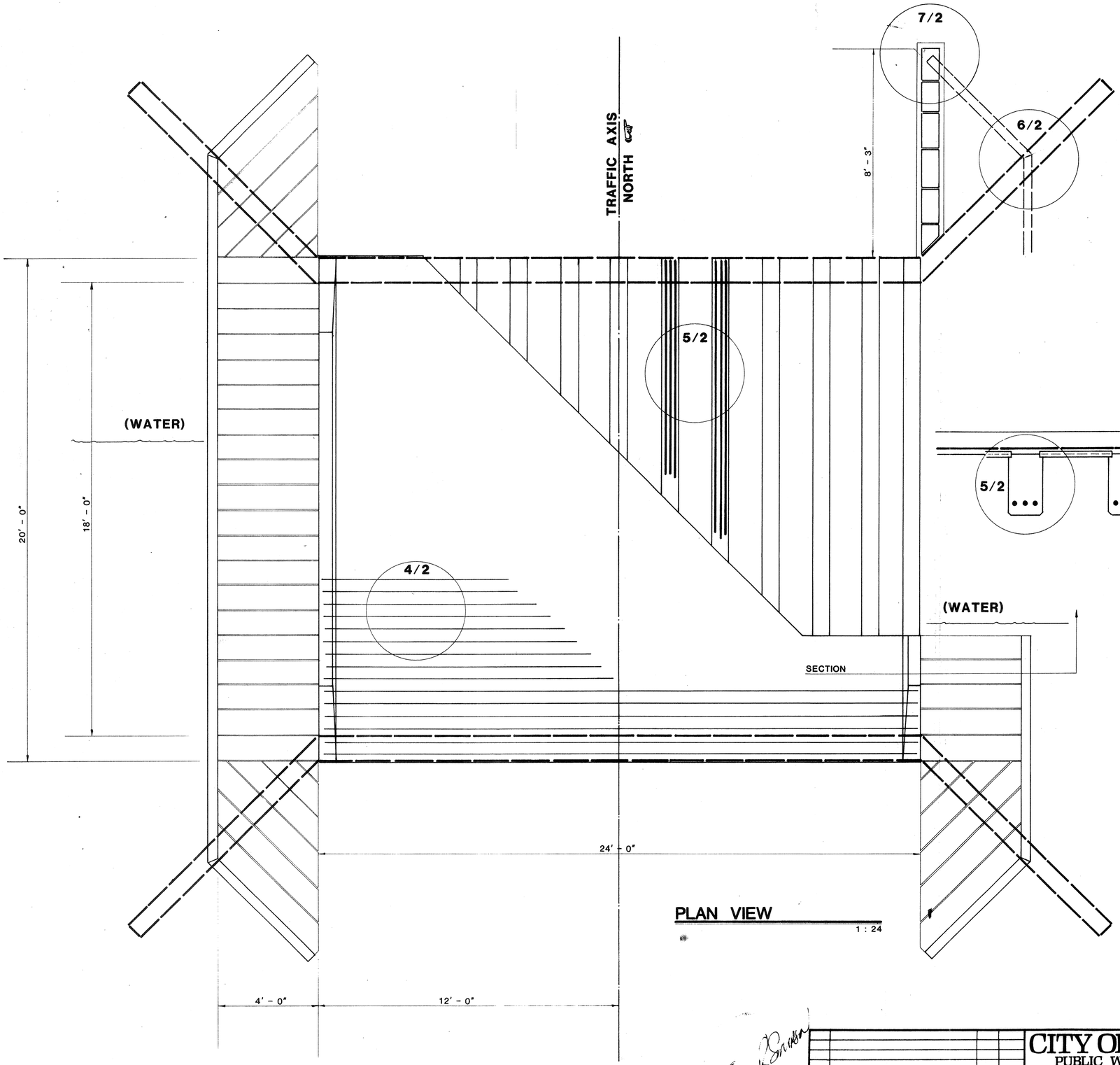

PLAN VIEW
1 : 24

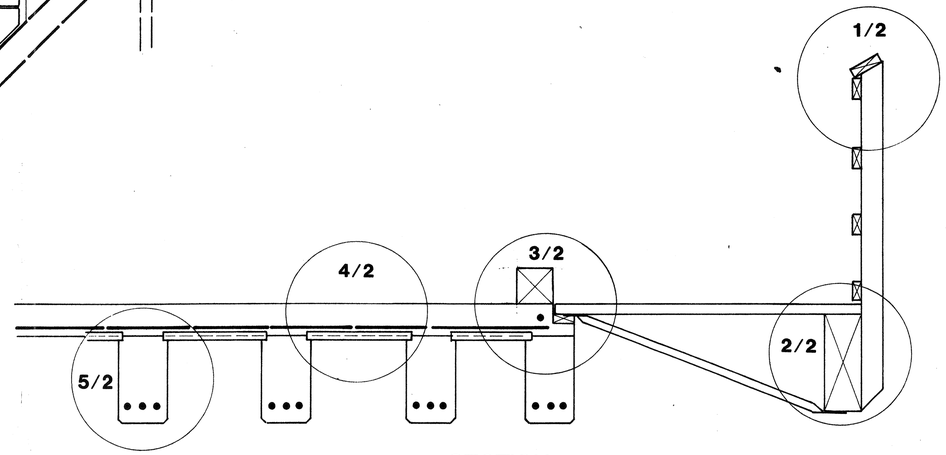

SECTION
1 : 12

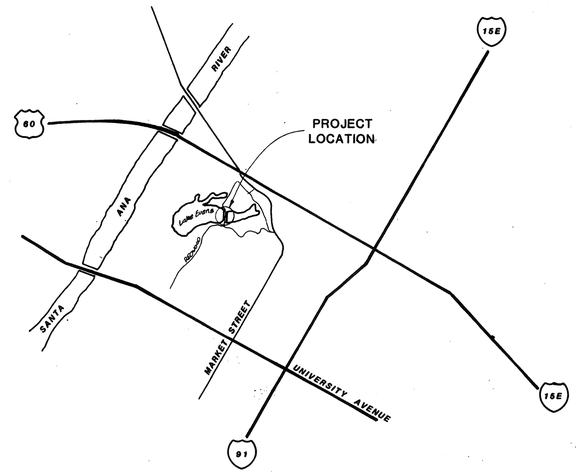

LOCATION
INDEX MAP
N.S.

MARK	REVISIONS	APPR.	DATE

DESIGNED BY SRS DRAWN BY SRS CHECKED BY WK

CITY OF RIVERSIDE
PUBLIC WORKS DEPARTMENT

APPROVED BY	DATE	BY
PRINCIPAL ENGINEER		
PARK DEPARTMENT		
TRAFFIC DIVISION		
CHIEF F. W. ENGINEER		
BLDG. DEPT.		

APPROVED BY

PUBLIC WORKS DIRECTOR

DATE

FAIRMOUNT PARK
BRIDGE DECK RECONSTRUCTION

PUBLIC WORKS DEPARTMENT REFERENCE # 1033J

HORIZ. SCALE: 1" = VERT. SCALE: 1" =

ACCOUNT NO.

M – 280

SHEET 1 OF 2

1 PEDESTRIAN RAIL

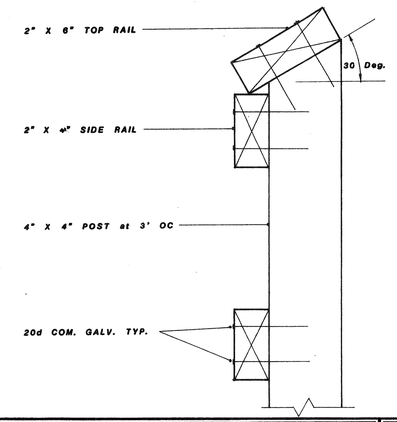

2 WALKWAY BEAM

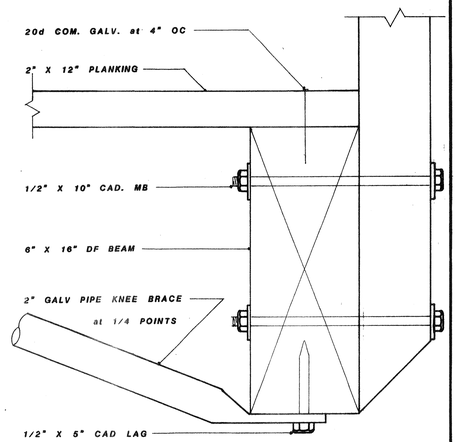

3 SECTION AT CURB

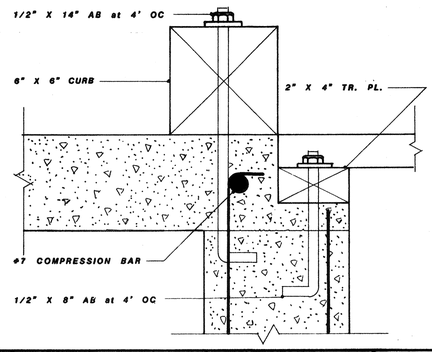

4 SECTION THRU DECK

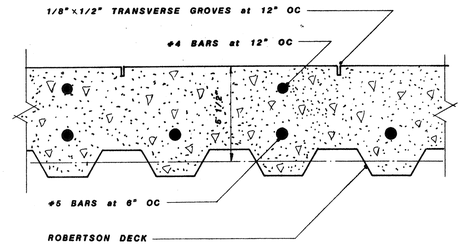

5 SECTION THRU INTERIOR BEAM

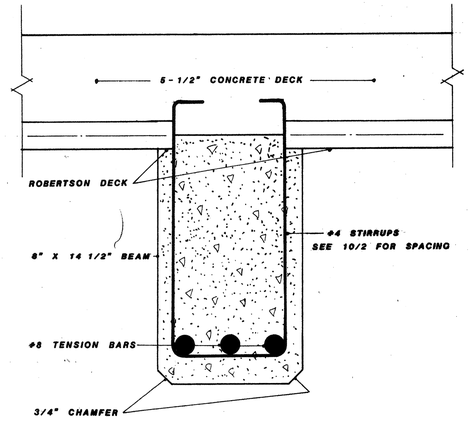

6 BEAM SEAT AT WING WALL

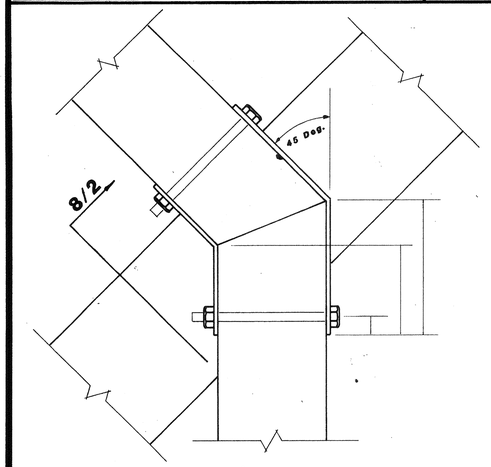

7 ANGLE CLIP AT STEM WALL

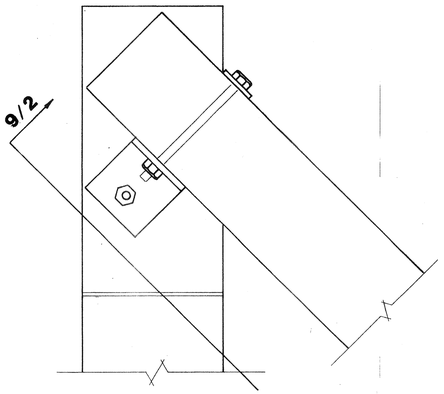

8

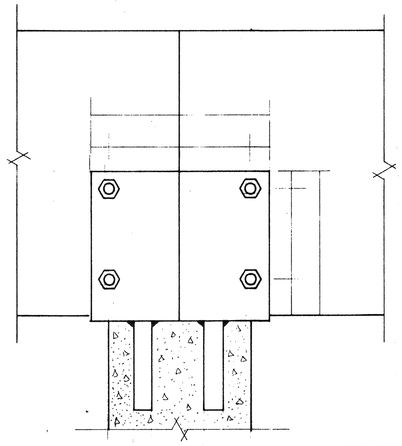

9

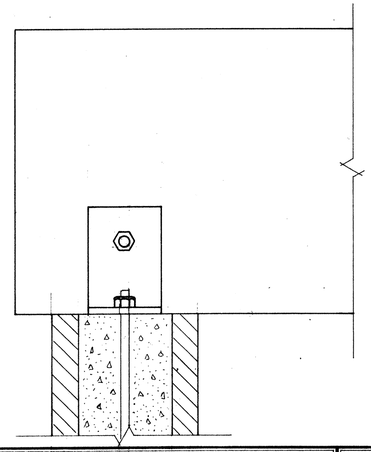

10 STIRRUP SPACING (ALL BEAMS)

1" = 4'

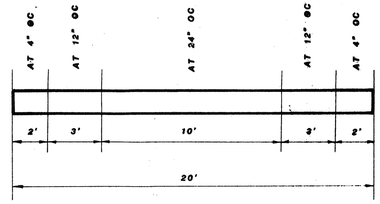

11

12

13

14

15

INDEX OF

CITY OF RIVERSIDE
PUBLIC WORKS DEPARTMENT

APPROVED BY	DATE	BY
PRINCIPAL ENGINEER		
PARK DEPARTMENT		
TRAFFIC DIVISION		
CHIEF P. W. ENGINEER		
BLDG. DEPT.		

APPROVED BY

PUBLIC WORKS DIRECTOR

DATE

MARK	REVISIONS	APPR.	DATE

DESIGNED BY SRS DRAWN BY SRS CHECKED BY WK

FAIRMOUNT PARK
BRIDGE DECK RECONSTRUCTION

PUBLIC WORKS DEPARTMENT REFERENCE # 1033J

HORIZ. SCALE: 1" = 4" VERT. SCALE: 1" = 4"

ACCOUNT NO.

M - 280

SHEET 2 OF 2

1984