SITE PLAN

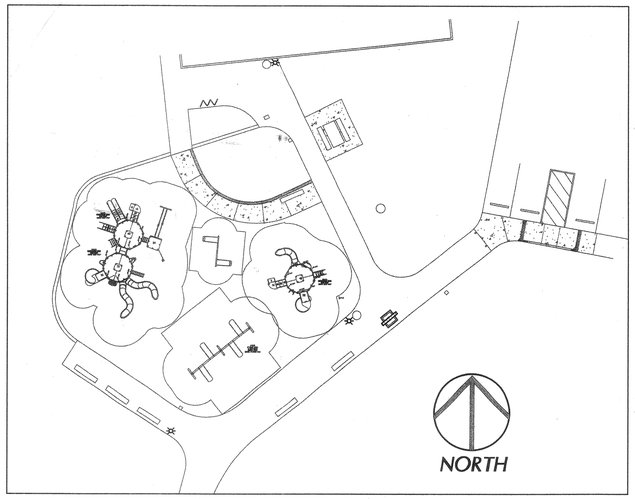

VICINITY MAP

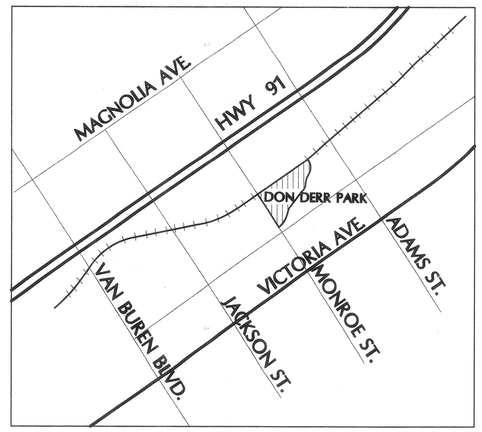

DON DERR PARK

SITE PLAN

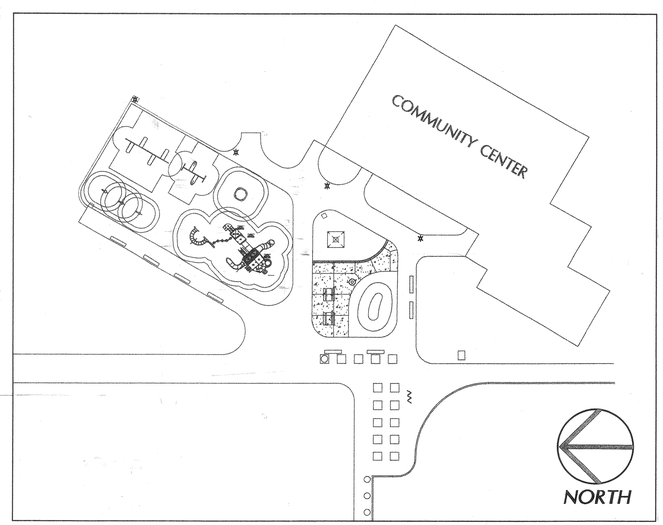

VICINITY MAP

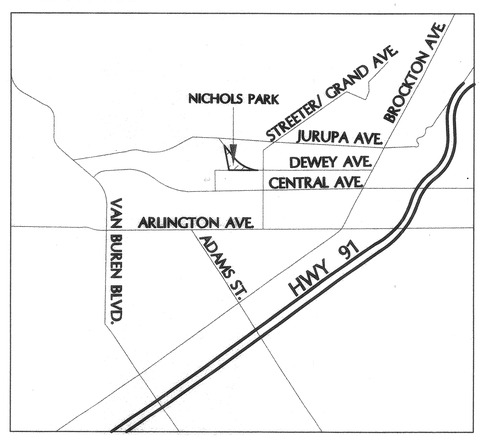

NICHOLS PARK

PROJECT:

CITY OF RIVERSIDE PLAYGROUND IMPROVEMENTS

DON DERR PARK

3003 MONROE STREET, RIVERSIDE, CA 92506

NICHOLS PARK

5505 DEWEY AVENUE, RIVERSIDE, CA 92506

PREPARED FOR:

CITY OF RIVERSIDE
3936 CHESTNUT STREET
RIVERSIDE, CA 92501

PHONE: (909)826-2012
FAX: (909)826-2010

CONTACT: EWINA LAU

SHEET INDEX:

DRAWING	DESCRIPTION	DRAWING	DESCRIPTION
T-1	COVER	LG-1A	NICHOLS GRADING PLAN
LG-1	DON DERR GRADING PLAN	LS-1A	NICHOLS STAKING PLAN
LS-1	DON DERR STAKING PLAN	LC-1A	NICHOLS CONSTRUCTION PLAN
LC-1	DON DERR CONSTRUCTION PLAN	LC-2A	NICHOLS CONSTRUCTION DETAILS
LC-2	DON DERR CONSTRUCTION DETAILS	LP-1A	NICHOLS PLANTING PLAN
LC-3	DON DERR CONSTRUCTION DETAILS	LP-2A	NICHOLS PLANTING DETAILS
LP-1	DON DERR PLANTING PLAN		
LP-2	DON DERR PLANTING DETAILS		

AGENCY SUBMITTAL:

COMMUNITY WORKS DESIGN GROUP

4649 Brockton Avenue
Riverside, CA 92506
(909) 369-0700
Fax (909) 369-4039
e-mail: bill@comworksdg.com
http://www.comworksdg.com

APPROVALS

PARKS & RECREATION DEPT.
APPROVED BY:
DATE

PLANNING DEPARTMENT
APPROVED BY:
DATE

SHEET TITLE

T-1

SHEET 1 OF 14

PLAN NUMBER 021068

NOT FINAL SET

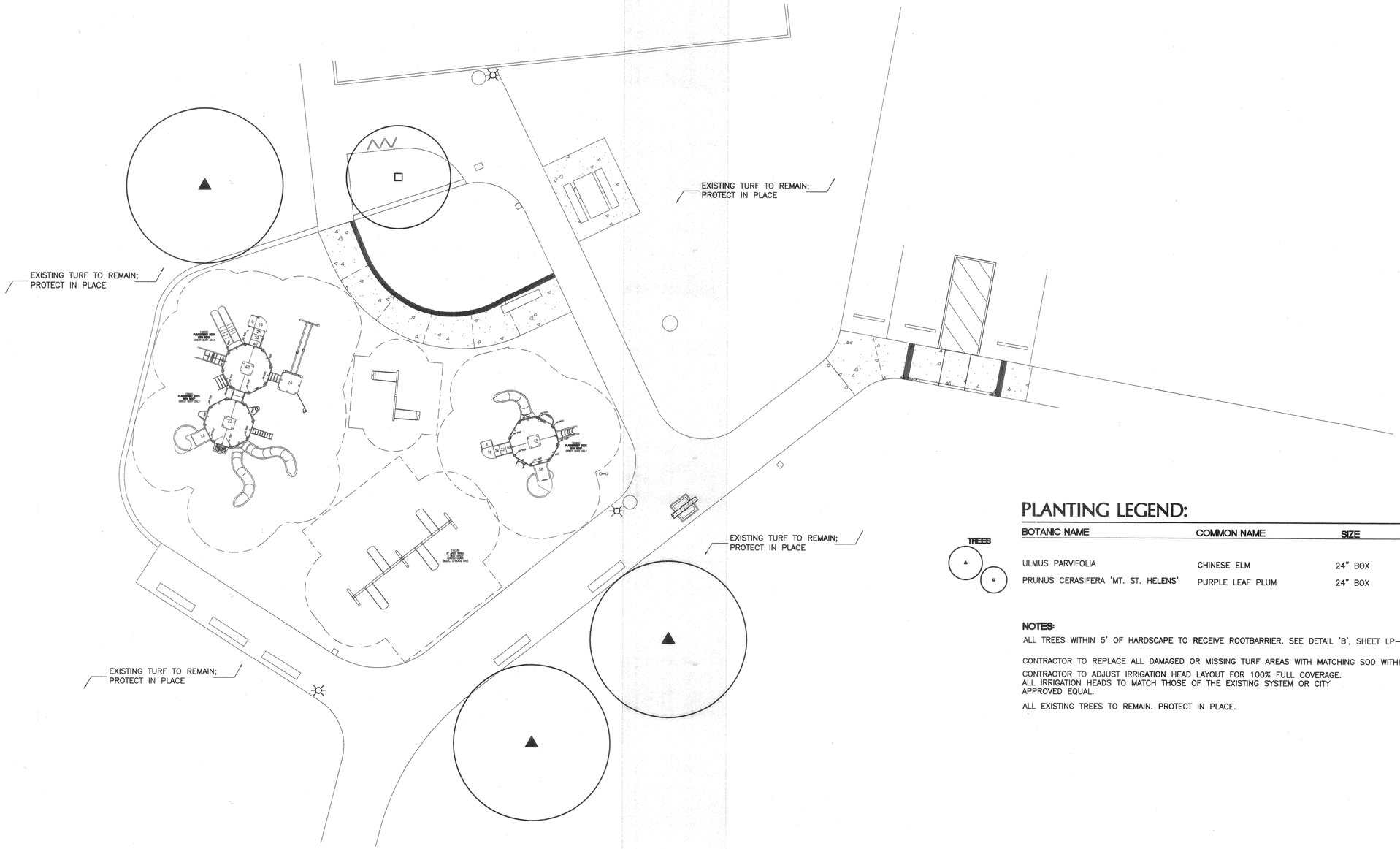

PLANTING LEGEND:

BOTANIC NAME	COMMON NAME	SIZE	DETAIL
TREES			
ULMUS PARVIFOLIA	CHINESE ELM	24" BOX	DETAIL 'A', LP-2
PRUNUS CERASIFERA 'MT. ST. HELENS'	PURPLE LEAF PLUM	24" BOX	DETAIL 'A', LP-2

NOTES:

ALL TREES WITHIN 5' OF HARDSCAPE TO RECEIVE ROOTBARRIER. SEE DETAIL 'B', SHEET LP-2.

CONTRACTOR TO REPLACE ALL DAMAGED OR MISSING TURF AREAS WITH MATCHING SOD WITHIN 15' AROUND THE PROJECT AREA.

CONTRACTOR TO ADJUST IRRIGATION HEAD LAYOUT FOR 100% FULL COVERAGE.
ALL IRRIGATION HEADS TO MATCH THOSE OF THE EXISTING SYSTEM OR CITY APPROVED EQUAL.

ALL EXISTING TREES TO REMAIN. PROTECT IN PLACE.

DIGALERT
DIAL TOLL FREE
1-800-227-2600
AT LEAST TWO DAYS BEFORE YOU DIG
UNDERGROUND SERVICE ALERT OF SOUTHERN CALIFORNIA

COMMUNITY WORKS DESIGN GROUP
4649 Brockton Avenue
Riverside, CA 92501
(909) 369-0700
Fax: (909) 369-4039
www.comworksdg.com

REGISTERED LANDSCAPE ARCHITECT
TIMOTHY I. MALONEY
No. 2110
Date 12-2-03
STATE OF CALIFORNIA

PREPARED UNDER THE DIRECTION OF
TIMOTHY I. MALONEY
REGISTERED LANDSCAPE ARCHITECT, RLA 2110
EXPIRATION DATE 10/31/04
SCALE: 1"=10'-0"
DATE: 11/25/03
NORTH:

CITY OF RIVERSIDE
3900 MAIN STREET
RIVERSIDE, CA 92522

BENCHMARK
–
–
–

MARK	REVISIONS	APPR.	DATE

DESIGNED BY WGW DRAWN BY ANH CHECKED BY TIM

CITY OF RIVERSIDE, CALIFORNIA
DEPARTMENT OF PUBLIC WORKS

APPROVED BY	BY	DATE
PRINCIPAL ENGINEER		
PARK DEPARTMENT		
TRAFFIC DIVISION		
CHIEF P.W. ENGR.		

APPROVED BY
DIRECTOR OF PUBLIC WORKS
DATE

DON DERR PARK
+ NICHOLS PARK
IMPROVEMENTS
DON DERR PARK
Planting Plan

PROJECT NO. 021068
LP-1
SHEET 7 OF 12
FILE NO. PC-00

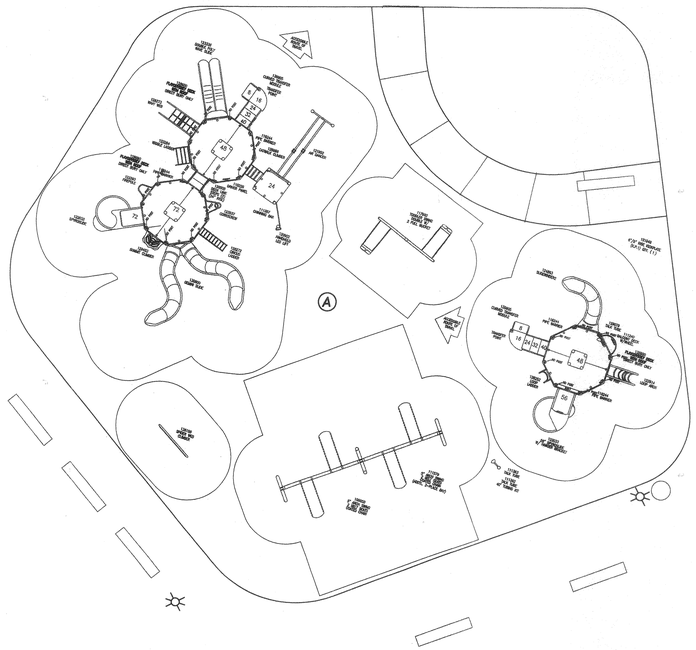

DETAIL NOTES:

1. INSTALL PLAY EQUIPMENT PER DISTRIBUTOR LAYOUT#: 25492-1. COAST RECREATION (949) 553-8065.

RUBBER MATTING DETAIL NOTES:

(A) COLOR A: 20% BLACK. 40 % ROYAL BLUE. 40% DARK GREEN. MANUFACTURED BY: SURFACE AMERICA. DISTRIBUTED BY: COAST RECREATION: (949) 553-8065.

A Don Derr Equipment Play Layout

SCALE: 1"=10'

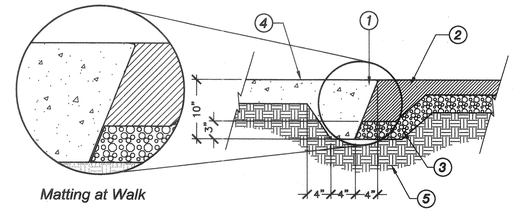

Matting at Walk

Matting at Walk

1. CONCRETE THICKENED EDGE
2. POURED IN PLACE PLAY MATTING PER SPECS.
3. 4" LAYER OF 3/4" AGGREGATE BASE @ 90% RELATIVE COMPACTION
4. 4" CONCRETE PAVING PER DETAIL 'A', SHEET LC-2.
5. 90% RELATIVE COMPACTED SUBGRADE

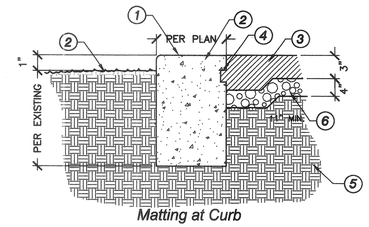

Matting at Curb

Matting at Curb

1. EXISTING CONCRETE CURB TO BE KEYED AS SHOWN
2. FINISH GRADE (PER PLAN)
3. POURED IN PLACE PLAY MATTING PER SPECS.
4. RUBBER PLAY SURFACING KEY
5. 90% RELATIVE COMPACTED SUBGRADE
6. 4" LAYER OF 3/4" AGGREGATE BASE @ 90% RELATIVE COMPACTION

* EXPANSION JOINTS TO OCCUR @10' MAX. SPACING
** CONTROL JOINTS TO OCCUR @5' MAX SPACING

B POURED IN PLACE MATTING

SCALE: NTS

DIGALERT
DIAL TOLL FREE
1-800-227-2600
AT LEAST TWO DAYS BEFORE YOU DIG
UNDERGROUND SERVICE ALERT OF SOUTHERN CALIFORNIA

COMWORKS DESIGN GROUP
4649 Brockton Avenue
Riverside, CA 92501
(909) 369-0700
Fax: (909) 369-4039
www.comworksdg.com

REGISTERED LANDSCAPE ARCHITECT TIMOTHY I. MALONEY No. 2110 STATE OF CALIFORNIA

PREPARED UNDER THE DIRECTION OF
TIMOTHY I. MALONEY
REGISTERED LANDSCAPE ARCHITECT, RLA 2110
EXPIRATION DATE 10/31/04

SCALE: N.T.S.
DATE: 11/25/03
NORTH:

CITY OF RIVERSIDE
3900 MAIN STREET
RIVERSIDE, CA 92522

BENCHMARK
–
–
–

MARK	REVISIONS	APPR.	DATE

DESIGNED BY WGW DRAWN BY ANH CHECKED BY TIM

CITY OF RIVERSIDE, CALIFORNIA
DEPARTMENT OF PUBLIC WORKS

APPROVED BY	BY	DATE
PRINCIPAL ENGINEER		
PARK DEPARTMENT		
TRAFFIC DIVISION		
CHIEF P.W. ENGR.		

APPROVED BY
DIRECTOR OF PUBLIC WORKS
DATE

DON DERR PARK
+ NICHOLS PARK
IMPROVEMENTS
DON DERR PARK
Construction Details

PROJECT NO. 021068
LC-3
SHEET 6 OF 14
FILE NO. PC-00

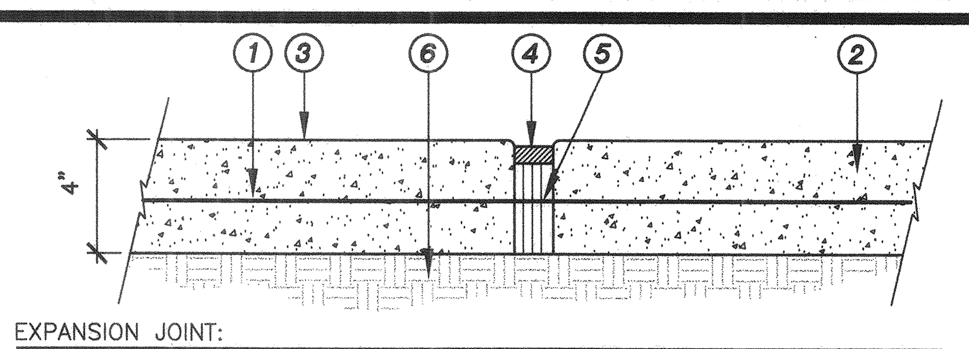

EXPANSION JOINT:

1. #3 REBAR CENTERED IN SLAB. PLACE 12" O.C. IN BOTH DIRECTIONS.
2. CONCRETE PAVING
3. FINISH PER PLAN
4. POLYURETHANE CAULKING TO MATCH CONCRETE COLOR
5. 1/2" PREMOLD FIBER EXPANSION JOINT @ 20' O.C. MAX. SPACING. (EXCEPTION: JOINTS ON PERIMETER WALKS @ 50' MAX. SPACING)
6. 90% COMPACTED SUBGRADE (6" MIN. DEPTH)

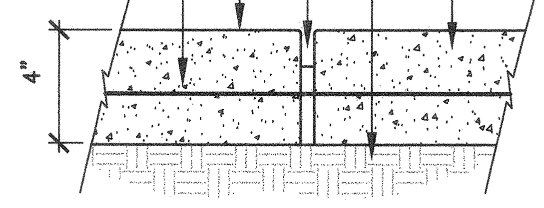

SCORE LINE:

1. #3 REBAR CENTERED IN SLAB. PLACE 12" O.C. IN BOTH DIRECTIONS.
2. CONCRETE PAVING
3. FINISH PER PLAN
4. AFTER PRELIMINARY TROWELING, THE CONCRETE SHALL BE SCORED WITH A STRAIGHT EDGE TO A DEPTH OF 1/2" @ 10' MAXIMUM SPACING
5. 90% COMPACTED SUBGRADE (6" MIN. DEPTH)

A Joints/Concrete Paving

SCALE: 1.5"=1'

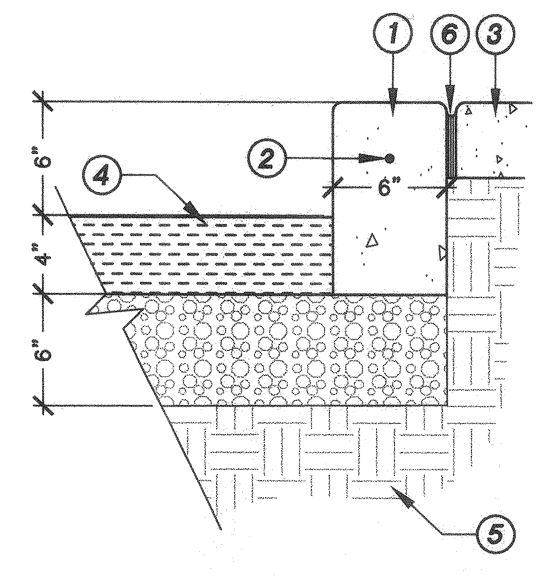

DETAIL NOTES:

1. 2500 PSI NATURAL GREY CONCRETE WITH LT. BROOM FINISH.
2. #4 REBAR; LAP BARS 6" AT SPLICES AND TIE.
3. FINISH CONCRETE PAVING PER PLAN.
4. INSTALL 1/2" AR 4000 AC PAVING. SEE GRADING PLAN FOR FINISHED SURFACE ELEVATION.
5. 90% RELATIVE COMPACTED NATIVE SOIL (6" MIN. DEPTH)
6. ½" WIDE A/C EMPREGNATED FELT EXPANSION JT.

* INSTALL 1/2" PREFORMED EXPANSION JOINTS @15'O.C. AND AT BEGINNING OF RADIUS.

B 6" Curb at A/C Paving

SCALE: 1.5"=1'

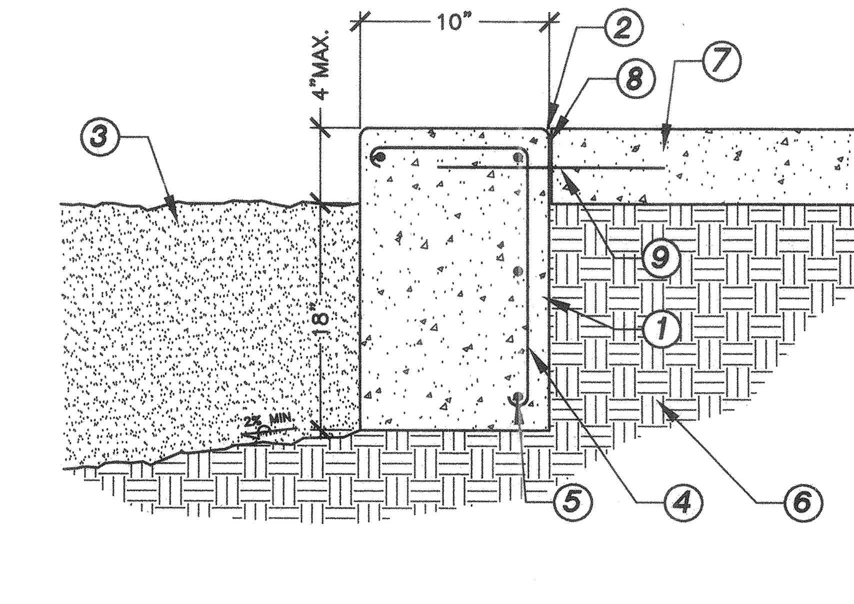

1. 2500 PSI NATURAL GRAY CONCRETE WITH LIGHT BROOM FINISH
2. 3/4" RADIUS ALL EDGES
3. SAND PER SPECIFICATIONS
4. #4 VERTICAL REBAR @ 30" O.C.
5. #4 HORIZONTAL REBAR CONTINUOUS (TYP. OF 4)
6. 90% COMPACTED SUBGRADE (6" MIN. DEPTH)
7. CONCRETE PAVING PER PLAN
8. EXPANSION JOINT
9. 12" LONG #4 SPEED DOWEL AT 36" O.C. AVAILABLE FROM AZTEC CONCRETE ACCESSORIES (800) 531-3355

NOTES:
EXPANSION JOINTS TO OCCUR @ 10' MAXIMUM SPACING ON CURB
CONTROL JOINTS TO OCCUR @ 5' MAXIMUM SPACING ON CURB

C Sand /Curb @ Walk

SCALE: 1.5"=1'

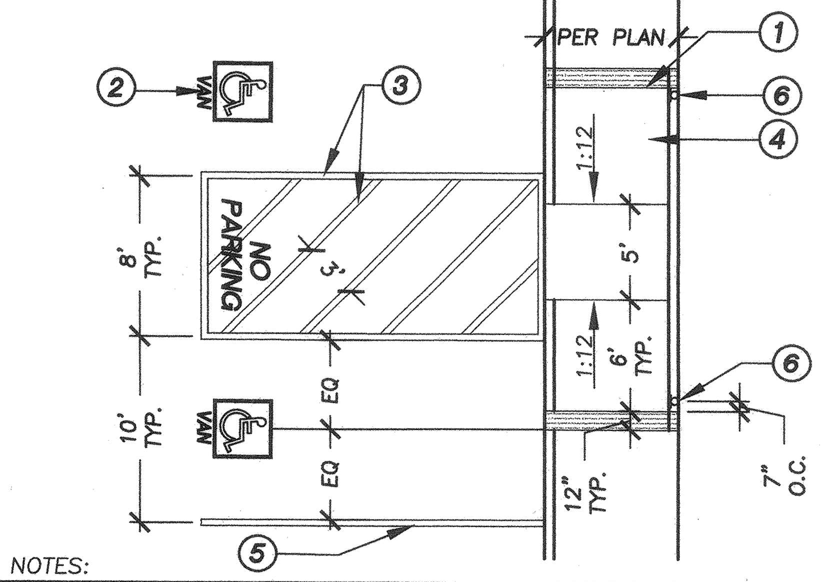

DETAIL NOTES:

1. 12" DETECTABLE WARNING STRIP; TOOL 1/2"W BY 1/2"H GROOVES TO NOTE THE TOP OF RAMP– ON THE HORIZONTAL SURFACE.
2. 36" SQ. BLUE INTERNATIONAL SYMBOL OF ACCESSIBILITY (TYP). VAN PARKING STALL WILL HAVE THE TEXT "VAN" PLACED BENEATH THE ACCESSIBILITY SYMBOL. ALL MARKINGS SHOULD BE CENTERED AT ENTRANCE TO STALL.
3. 4" THICK BLUE LINES. PAINT ALL STRIPING W/ VINYL PAINT.
4. DISABLED ACCESS RAMP. MAINTAIN 1:12 SLOPE.
5. 4" THICK WHITE LINES. PAINT ALL LINES W/ VINYL PAINT.
6. DISABLED PARKING SIGN ON STEEL POST PER STATE STANDARDS. ONE SIGN AND POST PER SPACE. POST IN FRONT OF EACH STALL EMBEDDED WITHIN RAMP CURB. SEE DETAIL "H", THIS SHEET.

D Disabled Parking

SCALE: 1/8"=1'

INSTALLATION

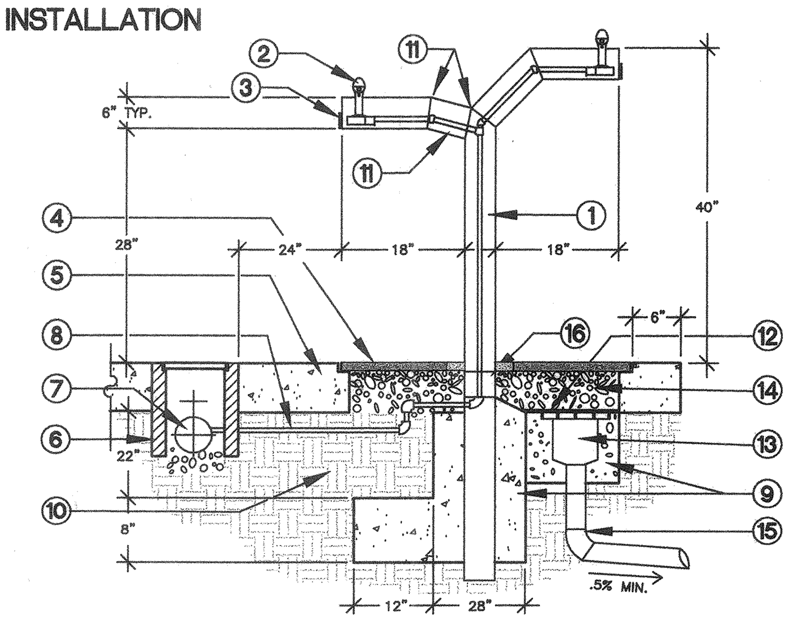

1. W10 COLUMN 15 LBS/FT, GALVANIZED.
2. SEE DETAIL AT RIGHT FOR BUBBLER GUARD AND PIPING
3. CONTROL LEVER AND VALVE SHALL BE HAWS MODEL (SEE DETAIL AT RIGHT)
4. 4' SQ. TREE GRATE FROM 'QUICK CRETE PRODUCTS' MODEL #QSTG48 W/FRAME #QS-48TGF. 'QUICK CRETE' OR APPROVED EQUAL (909)737-6240
5. CONCRETE PAVING PER PLAN
6. BROOKS CO. VALVE BOX #36-HFL (LOCKING LID) INSCRIBED "WATER" SET FLUSH WITH CONCRETE. 'BROOKS CO.' OR APPROVED EQUAL.
7. HAMMOND 3/4" BRASS BALL VALVE OR APPROVED EQUAL
8. 1/2" TYPE K COPPER PIPE
9. CONCRETE FOOTING
10. 90% RELATIVE COMPACTED SUBGRADE
11. MITER CUT AND WELD FULL, PEN BUTT WELD (TYP. ALL WELDS)
12. FIBERGLASS FABRIC ON TOP OF GRATE PER SPECIFICATIONS
13. FLOOR DRAIN MODEL #A-325 BY 'ALHAMBRA'– SLOPE CONCRETE TO DRAIN 'ALHAMBRA' OR APPROVED EQUAL (818)289-4294
14. 3/4" DRAIN ROCK TO BOTTOM OF GRATE
15. 4" ABS DRAINLINE – CONNECT TO FOUNTAIN SUMP PER DETAIL 'F', THIS SHEET.
16. CUT 2" HIGH OPENING TO CENTER SECTION OF 'H'-COLUMN TO ALLOW WATER TO PASS TO DRAIN

NOTES:
- GRIND SMOOTH ALL WELDS. GALVANIZE
- PAINT ALL WELDS & CUTS WITH (2) COATS OF GALVICON OR CITY APPROVED EQUAL PRIOR TO INSTALLATION
- CONSTRUCTION NOTES ARE TYPICAL FOR BOTH SIDES OF DRINKING FOUNTAIN

FABRICATION

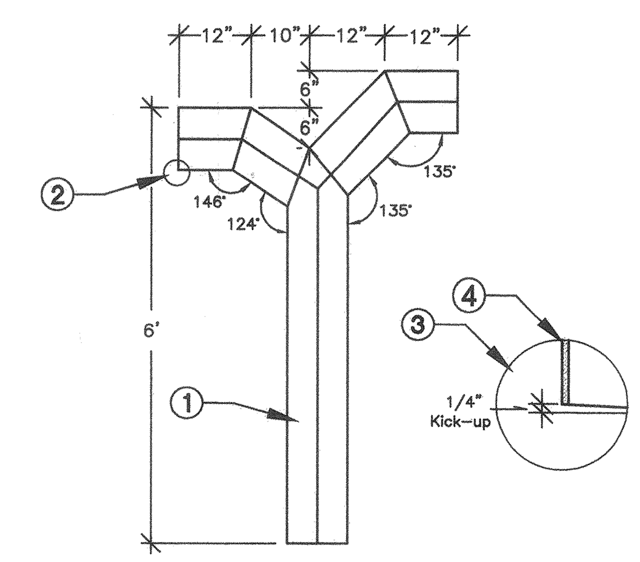

1. W10 COLUMN 15 LBS/FT, GALVANIZED 6" HEIGHT x 10" WIDTH
2. SEE ENLARGEMENT FOR KICK-UP DETAIL
3. KICK-UP 1/4" DURING FABRICATION TO PROVIDE SLOPE FOR POSITIVE DRAINAGE TO SUMP
4. 1/4" STEEL PLATE, WELD TO ENDS OF "H"

NOTE: CONSTRUCTION NOTES ARE TYPICAL FOR BOTH SIDES OF DRINKING FOUNTAIN

PLUMBING DETAIL

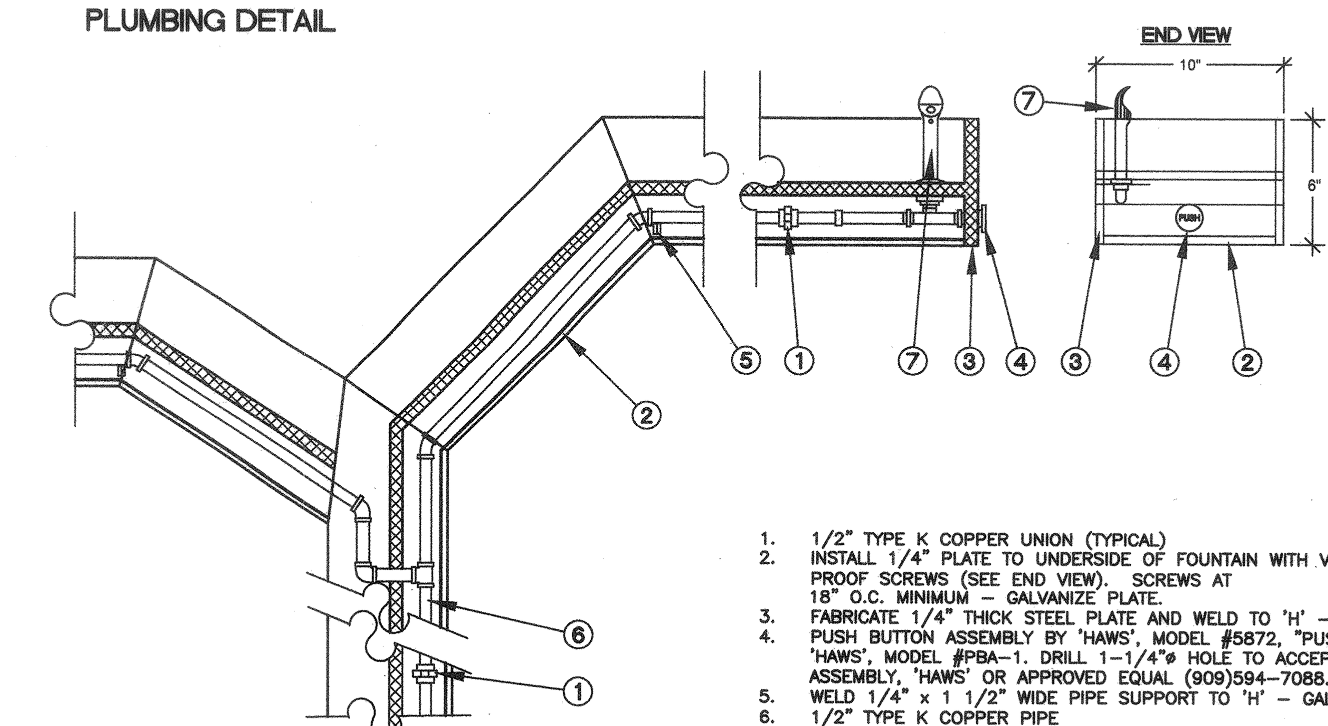

1. 1/2" TYPE K COPPER UNION (TYPICAL)
2. INSTALL 1/4" PLATE TO UNDERSIDE OF FOUNTAIN WITH VANDAL PROOF SCREWS (SEE END VIEW). SCREWS AT 18" O.C. MINIMUM – GALVANIZE PLATE.
3. FABRICATE 1/4" THICK STEEL PLATE AND WELD TO 'H' – GALVANIZED.
4. PUSH BUTTON ASSEMBLY BY 'HAWS', MODEL #5872, "PUSH" BUTTON BY 'HAWS', MODEL #PBA-1. DRILL 1-1/4"ø HOLE TO ACCEPT PUSH BUTTON ASSEMBLY, 'HAWS' OR APPROVED EQUAL (909)594-7088.
5. WELD 1/4" x 1 1/2" WIDE PIPE SUPPORT TO 'H' – GALVANIZED.
6. 1/2" TYPE K COPPER PIPE
7. WATER SPIGOT BY 'HAWS', MODEL #5725. 'HAWS' OR APPROVED EQUAL (909)594-7088.

E Drinking Fountain

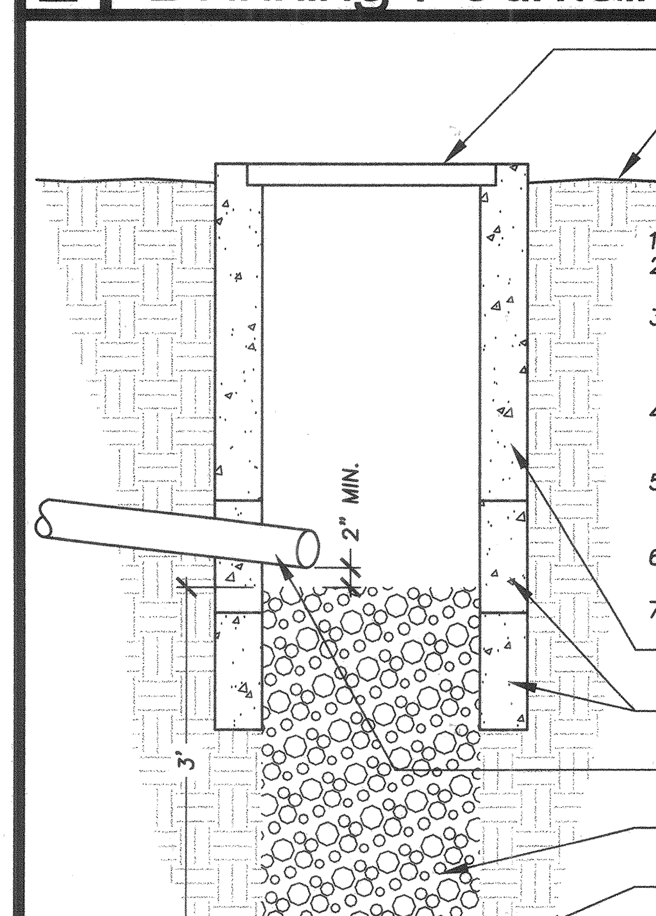

1. *FINISH GRADE*
2. *NATIVE SOIL; 90% RELATIVE COMPACTION*
3. *CATCH BASIN PER PLAN. BROOKS MODEL #2424 OR APPROVED EQUAL (909) 947-7470*
4. *INVERT ELEVATION; MAINTAIN 2% SLOPE. 4" ABS DRAINLINE FROM DRINKING FOUNTAIN*
5. *CATCH BASIN GRATE; BROOKS PARKWAY GRATE OR APPROVED EQUAL.*
6. *FILL 36" DEEP WITH 3/4" ROUND AGGREGATE*
7. *RISER EXTENTION(S) AS REQUIRED*

F Catch Basin Sump

SCALE: 3/4"=1'

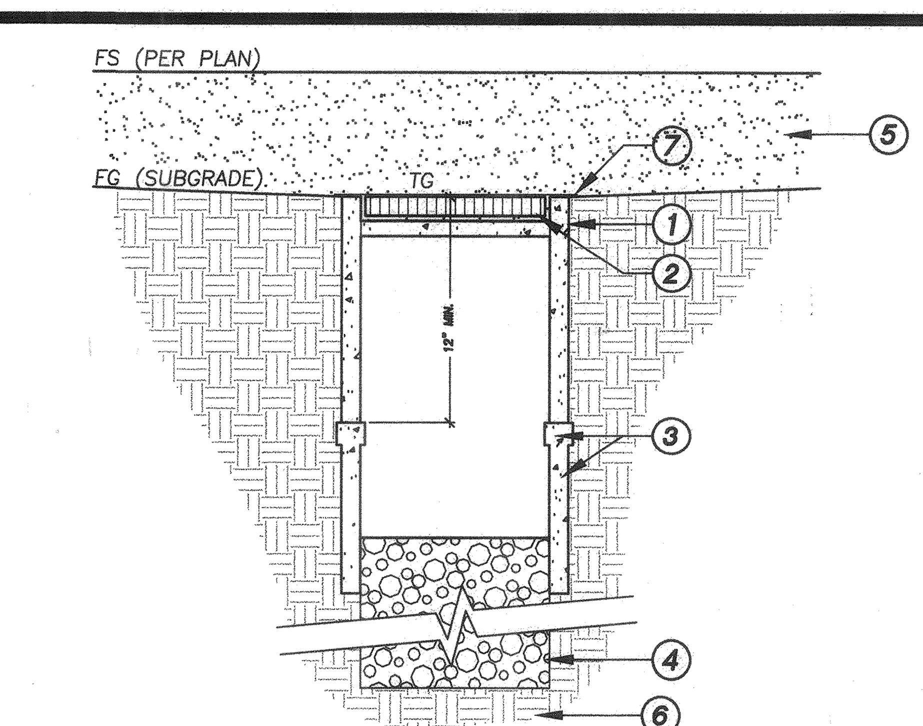

DETAIL NOTES:

1. *CATCH BASIN; BROOKS MODEL #1212L18 WITH GALVANIZED GRATE MODEL#: 1212SGP1G (909)947-7470 OR APPROVED EQUAL.*
2. *CATCH BASIN GRATE; BROOKS PARKWAY GRATE OR APPROVED EQUAL.*
3. *RISER EXTENSION (AS NEEDED)*
4. *3/4" ROUND AGGREGATE SUMP; MINIMUM 36" DEPTH*
5. *PLAY AREA SURFACE (RUBBER MATTING OR SAND) PER PLAN*
6. *90% RELATIVE COMPACTED SUBGRADE (6" MIN. DEPTH).*
7. *INSTALL FIBERGLASS FABRIC ON TOP OF BASIN PER SPECIFICATIONS.*

G Catch Basin / Sump

SCALE: 3/4"=1'

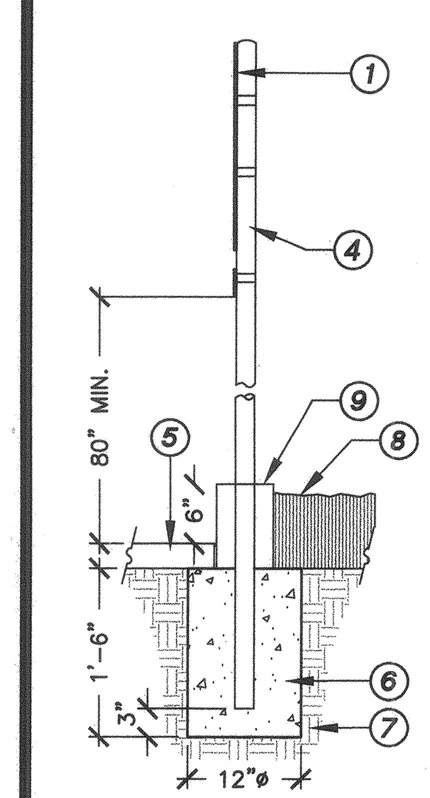

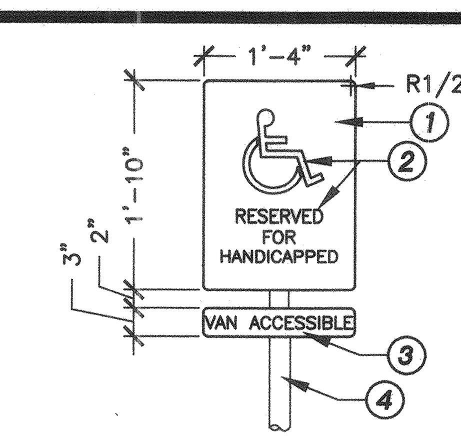

1. 16 GAUGE GALVANIZED PORCELAIN STEEL SIGN WITH 3-1/8"øx3/4" SHEET METAL SCREWS. PAINT FASTENERS TO MATCH BACKGROUND.
2. INTERNATIONAL SYMBOL OF ACCESSIBILITY AND GRAPHICS SHALL BE WHITE (REFLECTORIZED) ON BLUE (REFLECTORIZED) BACKGROUND. BLUE SHALL BE EQUAL TO COLOR #15090 IN FEDERAL STANDARD 5950. GRAPHICS WIDTH TO HEIGHT RATIO SHALL BE BETWEEN 1:5 AND 1:1, STROKE WIDTH TO HEIGHT RATIO SHALL BE BETWEEN 1:5 AND 1:10.
3. DESIGNATE 'VAN ACCESSIBLE' WHERE APPROPRIATE.
4. 2"ø SCHEDULE 40 GALVANIZED STEEL POST
5. CONCRETE RAMP PER PLAN. SEE DETAIL 'D', THIS SHEET.
6. 2500 PSI CONCRETE FOOTING
7. 90% RELATIVE COMPACTED SUBGRADE
8. FINISH GRADE; EXISTING PLANTED AREA
9. CONCRETE CURB PER PLAN.

H Parking Sign

SCALE: 3/4"=1'

PAVING JOIN: EXISTING TO NEW

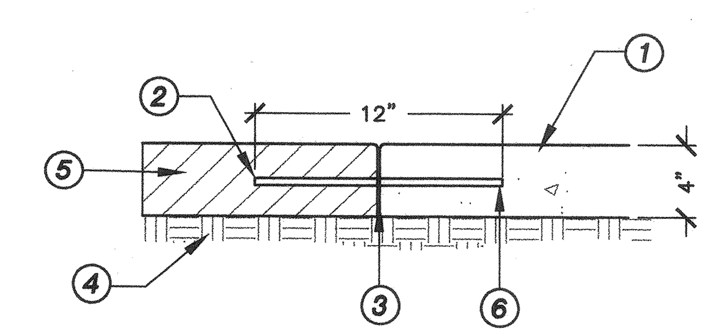

DETAIL NOTES:

1. NEW CONCRETE PAVING
2. #4 REBAR DOWEL @ 36" O.C.: GREASE ENDS
3. THIOKOL JOINT SEALER OR EQUAL OVER A/C EMPREGNATED.
4. 90% RELATIVE COMPACTED SUBGRADE (6" MIN. DEPTH) WITH SOIL STERILANT.
5. EXISTING CONCRETE PAVING
6. CORE DRILL TO 6" (EACH SIDE) AND EPOXY GROUT.

* A SPECIAL INSPECTION MAY BE REQUIRED FOR PROPER INSTALLATION OF DOWEL.

I Concrete Join

SCALE: 1.5"=1'

DIGALERT
DIAL TOLL FREE 1-800-227-2600
AT LEAST TWO DAYS BEFORE YOU DIG
UNDERGROUND SERVICE ALERT OF SOUTHERN CALIFORNIA

COMMUNITY WORKS DESIGN GROUP
4649 Brockton Avenue
Riverside, CA 92501
(909) 369-0700
Fax: (909) 369-4039
www.comworksdg.com

REGISTERED LANDSCAPE ARCHITECT — TIMOTHY I. MALONEY NO. 2110 — STATE OF CALIFORNIA — Signature — 12-1-03 Date

PREPARED UNDER THE DIRECTION OF TIMOTHY I. MALONEY
REGISTERED LANDSCAPE ARCHITECT, RLA 2110
EXPIRATION DATE 10/31/04

SCALE: N.T.S. | NORTH:
DATE: 11/25/03

CITY OF RIVERSIDE
3900 MAIN STREET
RIVERSIDE, CA 92522

BENCHMARK

MARK	REVISIONS	APPR.	DATE

DESIGNED BY WGW DRAWN BY ANH CHECKED BY TIM

CITY OF RIVERSIDE, CALIFORNIA
DEPARTMENT OF PUBLIC WORKS

APPROVED BY	BY	DATE
PRINCIPAL ENGINEER		
PARK DEPARTMENT		
TRAFFIC DIVISION		
CHIEF P.W. ENGR.		

APPROVED BY
DIRECTOR OF PUBLIC WORKS
DATE

DON DERR PARK + NICHOLS PARK IMPROVEMENTS
DON DERR PARK
Construction Details

PROJECT NO. 021068
LC-2
SHEET 5 OF 14
FILE NO. PC-00

POSITION EDGE OF PRINT ON THIS LINE

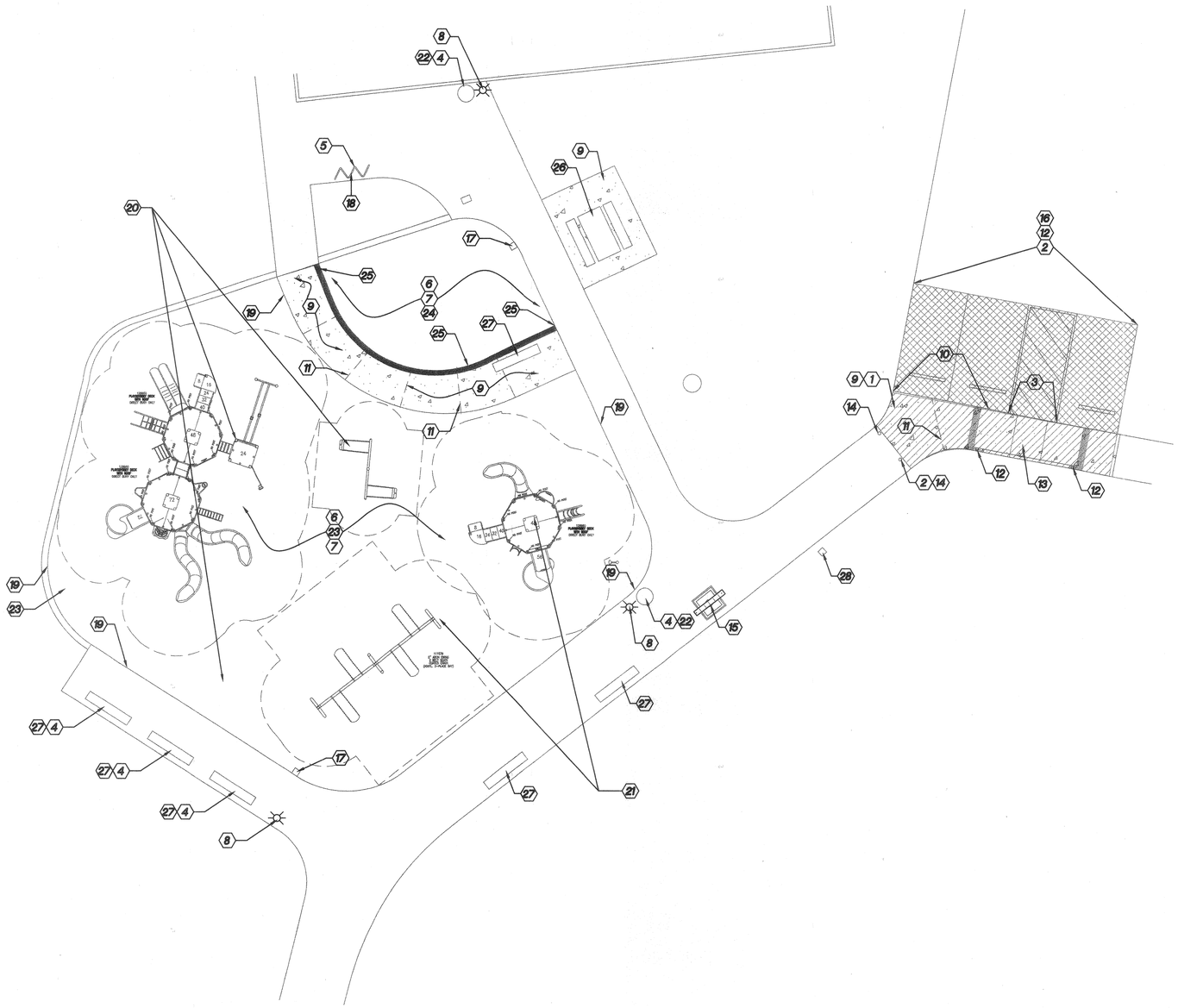

CONSTRUCTION LEGEND:

	DESCRIPTION	SUPPLIER	DETAIL
1	REMOVE EXISTING CONCRETE WALK AND DISPOSE OF OFF-SITE IN A LEGAL MANNER. REPLACE WITH NEW CONCRETE PER ITEM #9 (BELOW).		
2	REMOVE EXISTING PARKING STRIPING, WHEEL STOPS, SIGNAGE, AND AC PAVING. DISPOSE OF OFF-SITE IN A LEGAL MANNER.		
3	REMOVE 6" CONCRETE CURB. DISPOSE OF OFF-SITE IN A LEGAL MANNER.		
4	REMOVE EXISTING SITE FURNITURE AND DISPOSE OF OFF-SITE IN A LEGAL MANNER.		
5	REMOVE EXISTING BIKE PARKING BOLLARDS AND DISPOSE OF OFF-SITE IN A LEGAL MANNER. (TYP. OF 10). PATCH EXISTING PAVING AS NECESSARY. INSTALL NEW BIKE RACK PER ITEM# 18 (BELOW).		
6	REMOVE EXISTING PLAY EQUIPMENT, FOOTINGS, AND ACCESSORIES. DISPOSE OF OFF-SITE IN A LEGAL MANNER		
7	EXISTING SAND PLAY SURFACING TO BE SALVAGED. SIFT AND RE-USE AS NECESSARY FOR SUBSURFACE AT NEW PLAY AREA MATTING. USE BASE MATERIAL PER DETAIL C, SHEET LC-4 WHERE QUANTITIES OF SAND ARE DEFICIENT TO MEET FINISH SURFACES SHOWN ON GRADING PLANS.		
8	EXISTING SECURITY LIGHT TO REMAIN. PROTECT IN PLACE.		
9	INSTALL 4" NATURAL GREY PAVING WITH MEDIUM BROOM FINISH; JOIN FLUSH TO EXISTING PAVING USING DOWELS PER DETAIL (TYP.)		DETAIL 'A','I' SHEET LC-2
10	INSTALL 6" CONCRETE CURB AT AC PAVING.		DETAIL 'B' SHEET LC-2
11	CONTROL JOINT (TYP.)		DETAIL 'A' SHEET LC-2
12	INSTALL DISABLED PARKING STRIPING, WHEEL STOPS, AND SIGNAGE.		DETAIL 'D' SHEET LC-2
13	INSTALL DISABLED ACCESS RAMP.		DETAIL 'D' SHEET LC-2
14	EXISTING BOLLARD TO REMAIN. PROTECT IN PLACE. ADA PARKING SIGN TO BE REMOVED; DISPOSE OF OFF-SITE IN A LEGAL MANNER.		
15	INSTALL DRINKING FOUNTAIN.		DETAIL 'E' SHEET LC-2
16	INSTALL 4"/6" AC PAVING.		DETAIL 'B','D' SHEET LC-2
17	INSTALL CATCH BASIN AND SUMP.		DETAIL 'G' SHEET LC-2
18	INSTALL BIKE RACK; MODEL GNS-6-IG-S, GENESIS 6-BIKE STAINLESS STEEL RACK W/IN-GROUND MOUNT	HANNAN SPECIALTIES (800)722-2453	PER MFG'S SPECS
19	MATTING CONNECTION TO PAVING AND EXISTING CONCRETE CURB.		DETAIL 'B' SHEET LC-3
20	INSTALL LANDSCAPE STRUCTURES CHILD PLAY EQUIPMENT; COORD. W/EQUIPMENT DISTRIBUTOR; DRAWING LAYOUT # 25492-1	COAST RECREATION (949)553-8065	DETAIL 'A' SHEET LC-3
21	INSTALL LANDSCAPE STRUCTURES TOT LOT EQUIPMENT; COORD. W/EQUIPMENT DISTRIBUTOR; DRAWING LAYOUT # 25492-1.	COAST RECREATION (949)553-8065	DETAIL 'A' SHEET LC-3
22	INSTALL TRASH RECEPTACLE; TRINITY SERIES MODEL QR-TY2934W WITH LID A24; EPOXY IN PLACE (TYP.) CONTRACTOR TO ANCHOR PER MANUFACTURER'S SPECS.	QUICK CRETE (909)737-6240	PER MFG'S SPECS
23	INSTALL SURFACE AMERICA PLAY AREA MATTING; REFER TO DETAIL FOR LAYOUT AND COLORS	COAST RECREATION (949)553-8065	DETAIL 'A','B' SHEET LC-3
24	INSTALL 18" PLAYGROUND SAND PER SPECIFICATIONS.		PER CITY SPECS
25	INSTALL SAND PLAY AREA CURB PER DETAIL.		DETAIL 'C' SHEET LC-2
26	INSTALL 96" PICNIC TABLE. MODEL: 100S. COLOR: SAND.	OUTDOOR CREATIONS INC. (530) 337-6774	PER MFG'S SPECS
27	INSTALL 96" IN-GROUND MOUNT BENCH. MODEL: B8WBS. FRAME COLOR: BLACK. TOP COLOR: GREEN.	HANSON ASSOCIATES (714) 437-7778	PER MFG'S SPECS
28	INSTALL FOUNTAIN CATCH BASIN AND SUMP AT GRADE.		DETAIL 'F' SHEET LC-2

NOTES: ALL EXISTING TREES TO BE PROTECTED IN PLACE.

DIGALERT
DIAL TOLL FREE
1-800-227-2600
AT LEAST TWO DAYS BEFORE YOU DIG
UNDERGROUND SERVICE ALERT OF SOUTHERN CALIFORNIA

COMMUNITY WORKS DESIGN GROUP
4649 Brockton Avenue
Riverside, CA 92501
(909) 369-0700
Fax: (909) 369-4039
www.comworksdg.com

REGISTERED LANDSCAPE ARCHITECT TIMOTHY I. MALONEY No. 2110 Signature 12-1-03 Date STATE OF CALIFORNIA

PREPARED UNDER THE DIRECTION OF
TIMOTHY I. MALONEY
REGISTERED LANDSCAPE ARCHITECT, RLA 2110
EXPIRATION DATE 10/31/04

SCALE: 1"=10'-0"
DATE: 11/25/03
NORTH:

CITY OF RIVERSIDE
3900 MAIN STREET
RIVERSIDE, CA 92522

BENCHMARK
—
—
—

MARK	REVISIONS	APPR.	DATE

DESIGNED BY WGW DRAWN BY ANH CHECKED BY TIM

CITY OF RIVERSIDE, CALIFORNIA
DEPARTMENT OF PUBLIC WORKS

APPROVED BY	BY	DATE
PRINCIPAL ENGINEER		
PARK DEPARTMENT		
TRAFFIC DIVISION		
CHIEF P.W. ENGR.		

APPROVED BY
DIRECTOR OF PUBLIC WORKS
DATE

DON DERR PARK
+ NICHOLS PARK
IMPROVEMENTS
DON DERR PARK
Construction Plan

PROJECT NO. 021068
LC-1
SHEET 4 OF 14
FILE NO. PC-00

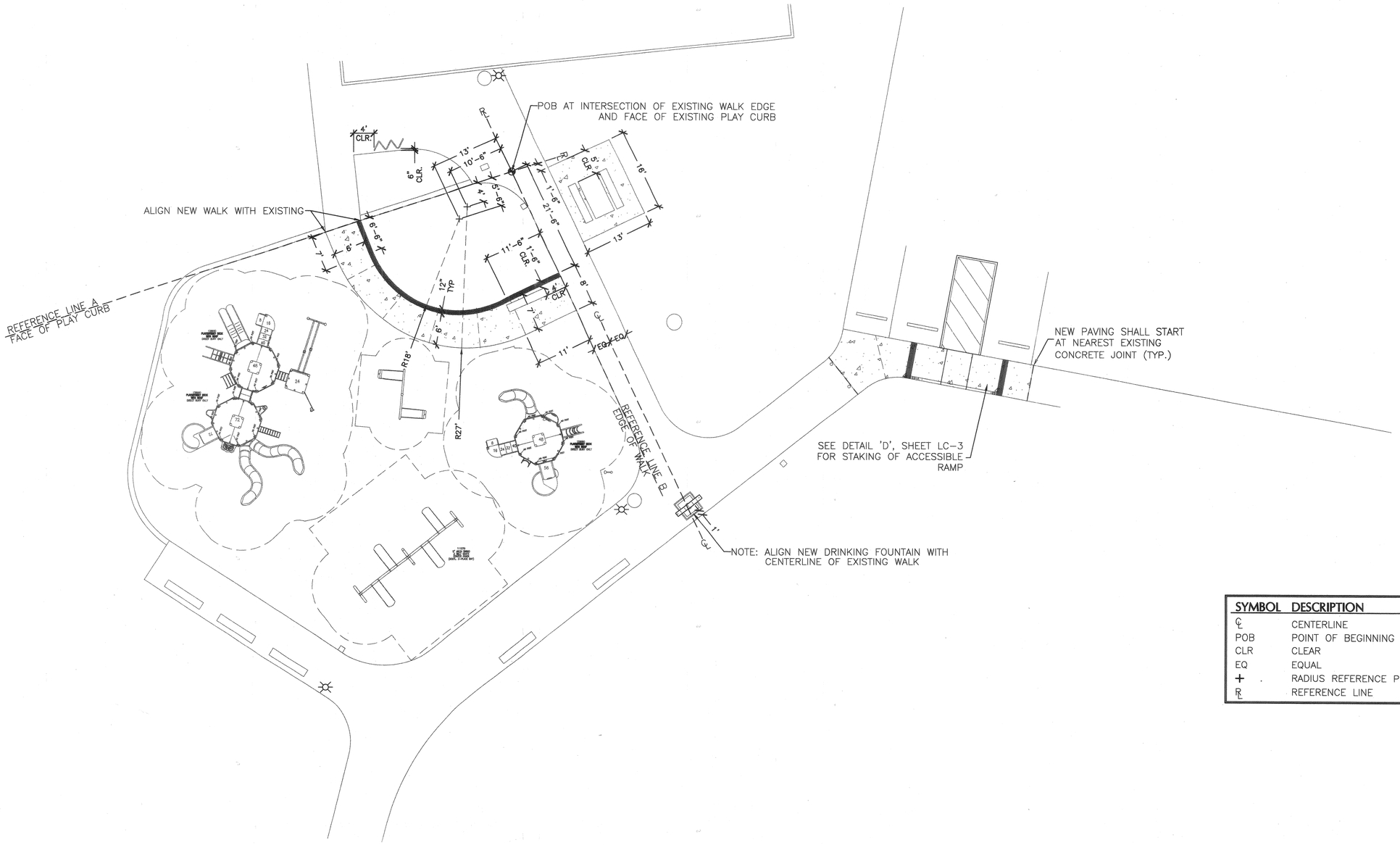

SYMBOL	DESCRIPTION
℄	CENTERLINE
POB	POINT OF BEGINNING
CLR	CLEAR
EQ	EQUAL
+	RADIUS REFERENCE POINTS
R	REFERENCE LINE

DIGALERT
DIAL TOLL FREE
1-800-227-2600
AT LEAST TWO DAYS BEFORE YOU DIG
UNDERGROUND SERVICE ALERT OF SOUTHERN CALIFORNIA

COMMUNITY WORKS DESIGN GROUP
4649 Brockton Avenue
Riverside, CA 92501
(909) 369-0700
Fax: (909) 369-4039
www.comworksdg.com

REGISTERED LANDSCAPE ARCHITECT TIMOTHY I. MALONEY No. 2110 Signature Date STATE OF CALIFORNIA

PREPARED UNDER THE DIRECTION OF
TIMOTHY I. MALONEY
REGISTERED LANDSCAPE ARCHITECT, RLA 2110
EXPIRATION DATE 10/31/04
SCALE: 1"=10'-0"
NORTH:
DATE: 11/25/03

BENCHMARK
–
–
–

CITY OF RIVERSIDE
3900 MAIN STREET
RIVERSIDE, CA 92522

MARK	REVISIONS	APPR.	DATE

DESIGNED BY WGW DRAWN BY ANH CHECKED BY TIM

CITY OF RIVERSIDE, CALIFORNIA
DEPARTMENT OF PUBLIC WORKS

APPROVED BY	BY	DATE
PRINCIPAL ENGINEER		
PARK DEPARTMENT		
TRAFFIC DIVISION		
CHIEF P.W. ENGR.		

APPROVED BY
DIRECTOR OF PUBLIC WORKS
DATE

DON DERR PARK
+ NICHOLS PARK
IMPROVEMENTS
DON DERR PARK
Staking Plan

PROJECT NO. 021068
LS-1
SHEET 3 OF 14
FILE NO. PC-00

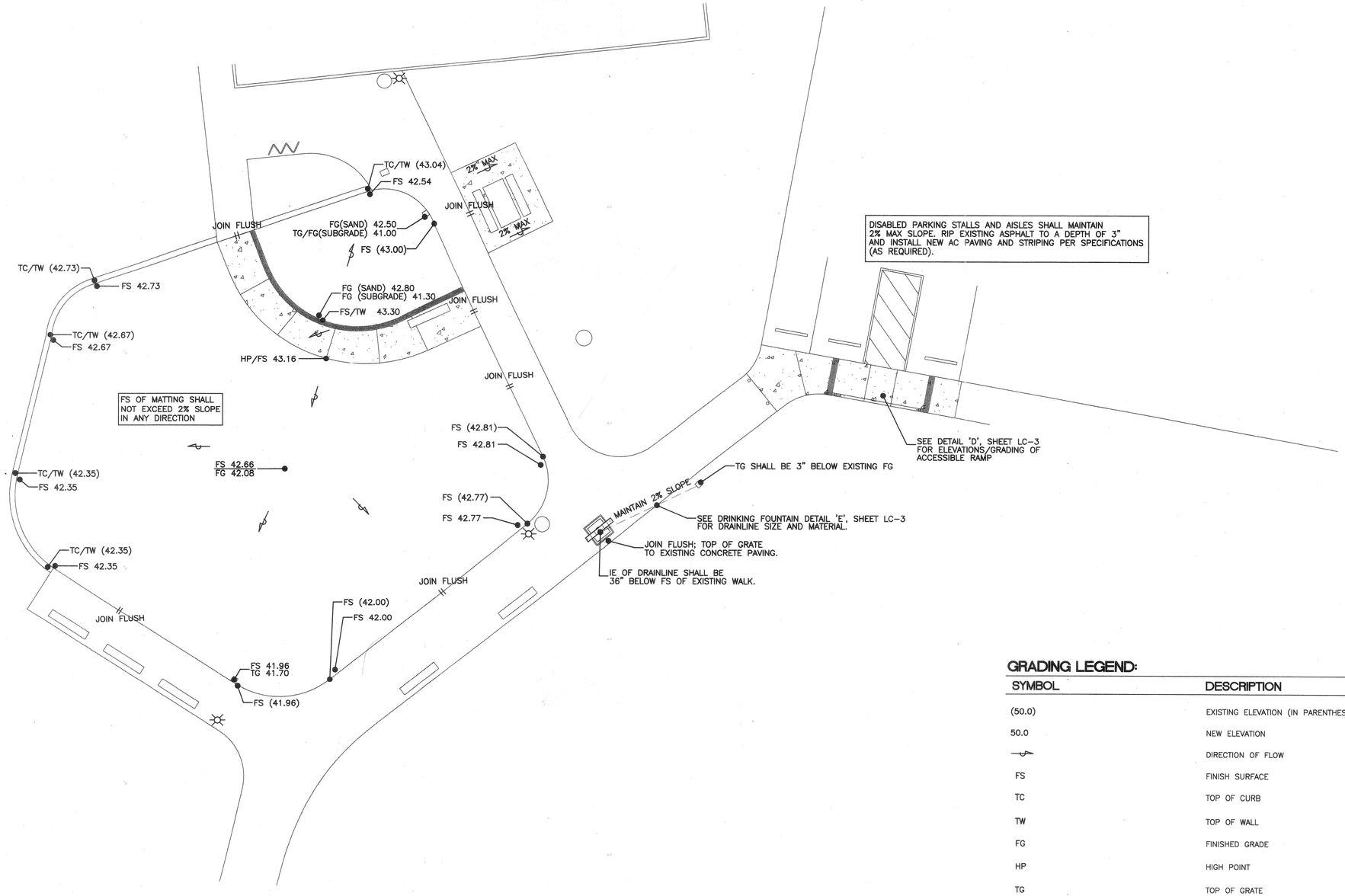

GRADING LEGEND:

SYMBOL	DESCRIPTION
(50.0)	EXISTING ELEVATION (IN PARENTHESES)
50.0	NEW ELEVATION
	DIRECTION OF FLOW
FS	FINISH SURFACE
TC	TOP OF CURB
TW	TOP OF WALL
FG	FINISHED GRADE
HP	HIGH POINT
TG	TOP OF GRATE
IE	INVERT ELEVATION

NOTE: * JOIN NEW PAVING FLUSH TO EXISTING PAVING (WHERE OCCURS)
* ALL EXISTING PLAY AREA DRAINAGE SUMPS THAT EXIST BELOW THE NEW SUBGRADE SHALL BE ABANDONED IN PLACE.

DIGALERT
DIAL TOLL FREE
1-800-227-2600
AT LEAST TWO DAYS BEFORE YOU DIG
UNDERGROUND SERVICE ALERT OF SOUTHERN CALIFORNIA

COMWORKS DESIGN GROUP
4649 Brockton Avenue
Riverside, CA 92501
(909) 369-0700
Fax: (909) 369-4039
www.comworksdg.com

REGISTERED LANDSCAPE ARCHITECT TIMOTHY I. MALONEY No. 2110 STATE OF CALIFORNIA

PREPARED UNDER THE DIRECTION OF
TIMOTHY I. MALONEY
REGISTERED LANDSCAPE ARCHITECT, RLA 2110
EXPIRATION DATE 10/31/04

SCALE: 1"=10'-0"
DATE: 11/25/03
NORTH:

CITY OF RIVERSIDE
3900 MAIN STREET
RIVERSIDE, CA 92522

BENCHMARK
—
—
—

MARK	REVISIONS	APPR.	DATE

DESIGNED BY WGW DRAWN BY ANH CHECKED BY TIM

CITY OF RIVERSIDE, CALIFORNIA
DEPARTMENT OF PUBLIC WORKS

APPROVED BY	BY	DATE
PRINCIPAL ENGINEER		
PARK DEPARTMENT		
TRAFFIC DIVISION		
CHIEF P.W. ENGR.		

APPROVED BY
DIRECTOR OF PUBLIC WORKS
DATE

DON DERR PARK
+ NICHOLS PARK
IMPROVEMENTS
DON DERR PARK
Grading Plan

PROJECT NO. 021068
LG-1
SHEET 2 OF 14
FILE NO. PC-00

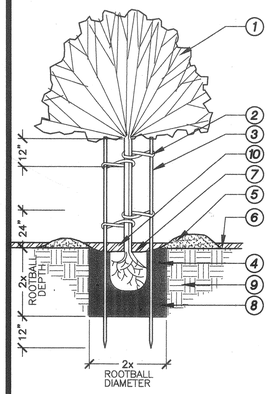

1. TREE PER PLANTING PLAN
2. TREE TIES BETWEEN STAKE AND TREE PER SPECIFICATIONS
3. 2"ø x 10' LONG LODGE POLE STAKES
4. PLANT TABLETS PER PLANTING SPECIFICATIONS
5. EARTH WATERING BASIN IN GROUNDCOVER AREAS
6. FINISH GRADE
7. ROOTBALL: SET CROWN 2" ABOVE FINISH GRADE
8. BACKFILL MIX PER PLANTING SPECIFICATIONS
9. NATIVE SOIL
10. 2" MINIMUM DEPTH MULCH LAYER PER PLANTING PLAN

NOTE:
PROVIDE EXPANDABLE TRUNK GUARD IN ALL TURF AREAS

A Tree Planting — SCALE: N.T.S.

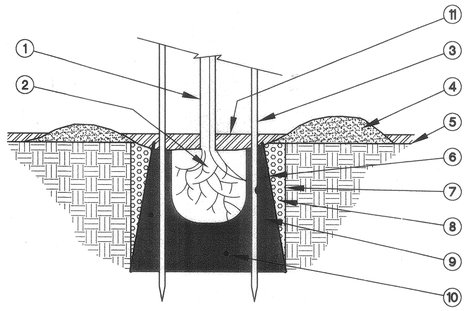

1. TREE PER PLANTING PLAN
2. ROOTBALL
3. STAKE PER 'TREE PLANTING' DETAIL
4. EARTH WATERING BASIN PER 'TREE PLANTING'. DETAIL
5. FINISH GRADE
6. CP-SERIES ROOTBARRIER BY CENTURY PRODUCTS (714) 632-7083
7. TREE PLANTING PIT
8. 3/4"-1" CRUSHED ROCK / GRAVEL
9. COMPACTED BACKFILL MIX PER PLANTING SPECS / NOTES
10. PLANT TABLETS PER PLANTING SPECS / NOTES
11. 2" MINIMUM DEEP MULCH PER PLANTING PLAN

B Root Barrier — SCALE: N.T.S.

C

D

E

F

G

H

I

J

K

L

DIGALERT
DIAL TOLL FREE
1-800-227-2600
AT LEAST TWO DAYS BEFORE YOU DIG
UNDERGROUND SERVICE ALERT OF SOUTHERN CALIFORNIA

COMWORKS DESIGN GROUP
4649 Brockton Avenue
Riverside, CA 92501
(909) 369-0700
Fax: (909) 369-4039
www.comworksdg.com

REGISTERED LANDSCAPE ARCHITECT — TIMOTHY I. MALONEY — No. 2110 — Signature — 12-1-03 Date — STATE OF CALIFORNIA

PREPARED UNDER THE DIRECTION OF
TIMOTHY I. MALONEY
REGISTERED LANDSCAPE ARCHITECT, RLA 2110
EXPIRATION DATE 10/31/04

SCALE: N.T.S.
DATE: 11/25/03
NORTH:

BENCHMARK
—
—
—

CITY OF RIVERSIDE
3900 MAIN STREET
RIVERSIDE, CA 92522

MARK	REVISIONS	APPR.	DATE

DESIGNED BY WGW DRAWN BY ANH CHECKED BY TIM

CITY OF RIVERSIDE, CALIFORNIA
DEPARTMENT OF PUBLIC WORKS

APPROVED BY	BY	DATE
PRINCIPAL ENGINEER		
PARK DEPARTMENT		
TRAFFIC DIVISION		
CHIEF P.W. ENGR.		

APPROVED BY
DIRECTOR OF PUBLIC WORKS
DATE

DON DERR PARK
+ NICHOLS PARK
IMPROVEMENTS

General

Planting Details

PROJECT NO. 021068

LP-2

SHEET 8 OF 14

FILE NO. PC-00