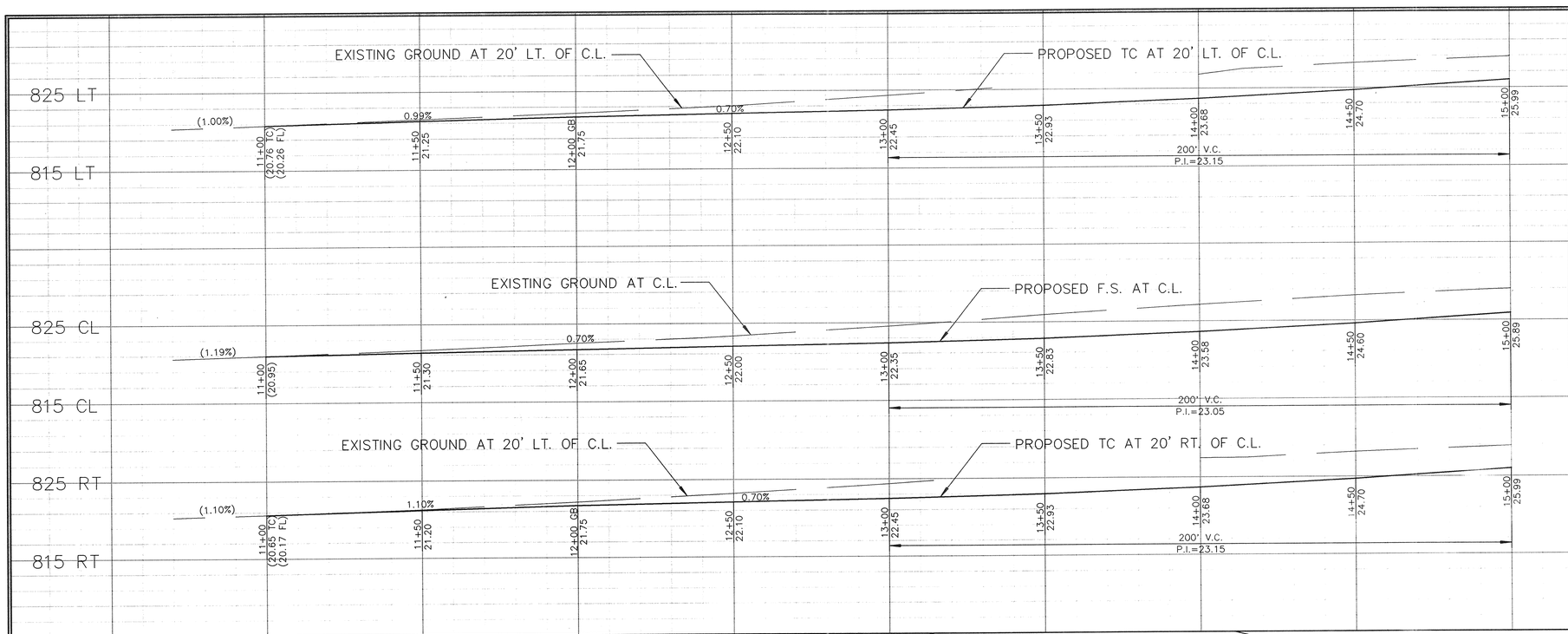

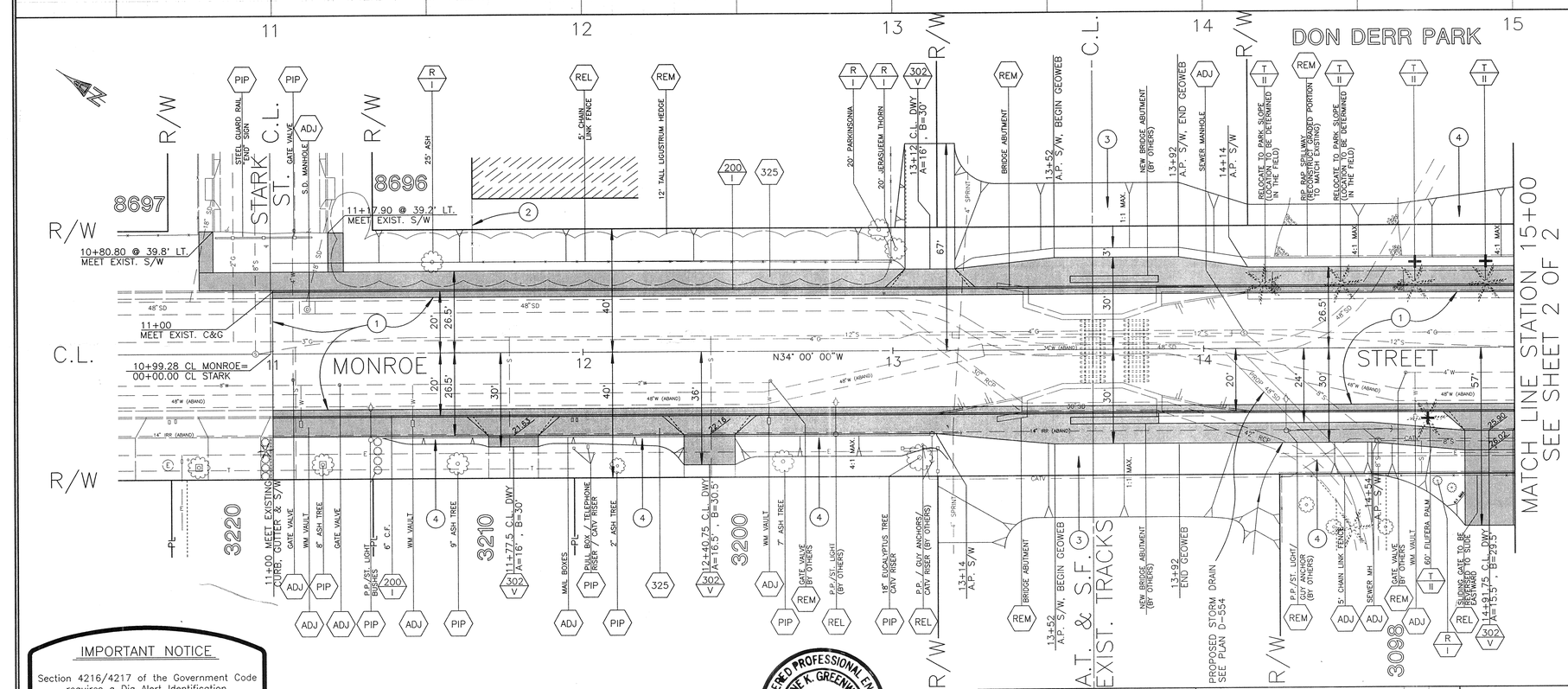

BENCHMARK

B.M. 15-3 ALONG AT&SF RAILWAY ABOUT 1.1 MILES NE'LY FROM STATION ARLINGTON 48.5' S'LY OF CL R/R TRACKS, 180' E'LY OF CL MONROE ST. 2" BRASS DISK IN 10" DIAMETER CONCRETE POST, 0.3' HIGHER THAN THE TRACKS.

ELEVATION 843.720

NOTE

CONTRACTOR SHALL COORDINATE THE WORK ON THIS PROJECT WITH A.T. & S.F. RAILWAY COMPANY. SEE SECTIONS 7-7.1 AND 7-10.4.5 OF THE SPECIAL PROVISIONS.

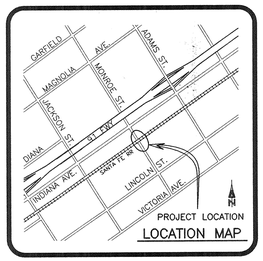

LOCATION MAP

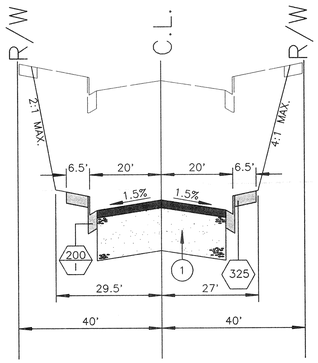

TYPICAL CROSS SECTION

FROM STA. 11+00 TO STA. 13+14
T.I.=6, R=13

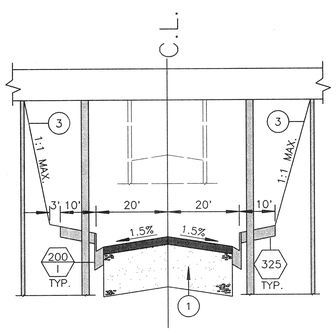

TYPICAL CROSS SECTION

FROM STA. 13+52 TO STA. 14+92
T.I.=6, R=13

CONSTRUCTION NOTES:

- NUMBERS ABOVE 100 IN HEXAGON ON THE PLAN REFER TO THE RESPECTIVE STANDARD DRAWING AND SHALL BE CONSTRUCTED ACCORDINGLY
- T II — TRANSPLANT CLASS II PALM TREE TO NEW LOCATION AS MARKED
- R I — REMOVE TREE, CLASS AS INDICATED
- REM — REMOVE AND DISPOSE OF OFF SITE
- REL — RELOCATE
- ADJ — ADJUST TO GRADE
- PIP — PROTECT IN PLACE
- (1) CONSTRUCT 4" A.C. PAVEMENT OVER 10" CRUSHED AGGREGATE BASE OR 8.5" A.C. OVER COMPACTED NATIVE.
- (2) REMOVE EXISTING DOUBLE SWING CHAIN LINK GATE AND INSTALL 9' WIDE, 5' HIGH SINGLE SWING CHAIN LINK GATE.
- (3) CONSTRUCT 1:1 MAXIMUM SLOPE WITH SLOPE STABILIZATION SYSTEM AS SPECIFIED (GEOWEB OR CITY APPROVED EQUAL). PLANT ENTIRE SLOPE WITHIN RAILROAD RIGHT-OF-WAY WITH ENGLISH IVY (HEDERA HELIX) AT 18" ON CENTERS.
- (4) MODIFY IRRIGATION SYSTEM AND HYDROSEED GRADED AREAS TO MATCH EXISTING.

RECEIVED
MAR 20 1995
PARK & RECREATION PLANNING & DESIGN

IMPORTANT NOTICE

Section 4216/4217 of the Government Code requires a Dig Alert Identification Number to be issued before a "Permit to Excavate" will be valid. For your Dig Alert I.D. Number call Underground Service Alert

TOLL FREE 1-800-422-4133

Two working days berfore you dig.

REGISTERED PROFESSIONAL ENGINEER
DUANE K. GREENWOOD
No. 43965
Exp. 6/30/97
CIVIL
STATE OF CALIFORNIA

ENGINEER IN RESPONSIBLE CHARGE

DUANE K. GREENWOOD
R.C.E. No. 43965 EXPIRES 6/30/97

DATE 3/13/95

MARK	REVISIONS	APPR.	DATE

DESIGNED BY P.H. DRAWN BY P.H. CHECKED BY

CITY OF RIVERSIDE, CALIFORNIA
PUBLIC WORKS DEPARTMENT

APPROVED BY	BY	DATE
DEPUTY P.W. DIRECTOR		3/16/95
PRINCIPAL ENGINEER		3/16/95
CHIEF P.W. INSPECTOR		3/16/95
TRAFFIC DIVISION		3/16/95
SURVEYOR		3/16/95
STREET DIVISION		3/16/95
PARKS DEPARTMENT		3/16/95

APPROVED BY

PUBLIC WORKS DIRECTOR

DATE 3/16/95

MONROE STREET UNDERPASS

AT A.T. & S.F. RAILROAD CROSSING

HORIZ. SCALE: 1" = 20' VERT. SCALE: 1" = 8'

ACCOUNT NUMBER 230-541500-440223-30262

R-3385

SHEET 1 OF 2

FILE NO. : PC 3751-P

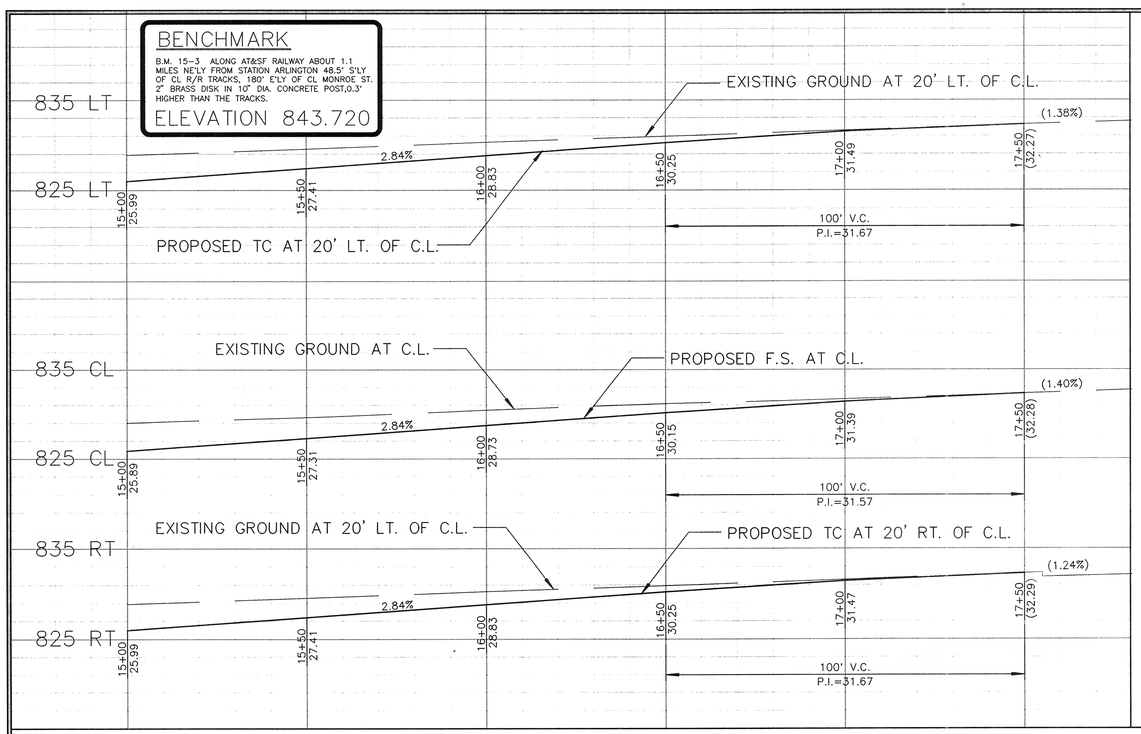

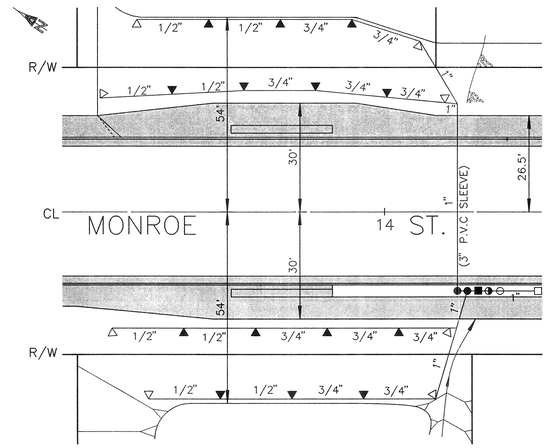

LEGEND

- — P.V.C. PIPE, SCHEDULE 40, SIZE AS SHOWN.
- □ 1" WATER METER BY CITY PUBLIC UTILITIES DEPARTMENT FOR IRRIGATION.
- ○ REDUCED PRESSURE / DOUBLE CHECK VALVE BACKFLOW DEVICE, SIZE=1", PER SPECIFICATIONS AND PARK & RECREATION DETAIL NO. 4011.
- ◑ 1" GATE VALVE PER SPECIFICATIONS AND PARK & RECREATION DETAIL NO. 4020.
- ● TORO BRAND 1" AUTOMATIC VALVE MODEL 216-26-04 PER SPECIFICATIONS AND PARK & RECREATION DETAIL NO. 4030.
- ▲ TORO BRAND STREAM ROTOR SPRINKLER HEAD MODEL 304-12-02 (180 DEGREE PATTERN) PER SPECIFICATIONS AND PARK & RECREATION DETAIL NO. 4040.
- △ TORO BRAND STREAM ROTOR SPRINKLER HEAD MODEL 304-12-02 (90 DEGREE PATTERN) PER SPECIFICATIONS AND PARK & RECREATION DETAIL NO. 4040.
- ■ TORO BRAND IC SERIES CONTROLLER MODEL 104-06-06 PER SPECIFICATIONS AND PARK & RECREATION DETAIL NO. 4070.

PARK AND RECREATION NOTES:

1. ALL RELATED WORK WITHIN PUBLIC RIGHT OF WAY SHALL CONFORM TO THE CITY OF RIVERSIDE PARK AND RECREATION DEPARTMENT STANDARDS AND CITY OF RIVERSIDE STREET TREE POLICIES.
2. WHEN CALLING FOR INSPECTIONS CONTACT THE STREET TREE INSPECTOR A MIN. OF 48 HOURS IN ADVANCE AT (909) 351-6126 TO SCHEDULE AN INSPECTION. A FIELD NOTICE WILL BE ISSUED AS WRITTEN APPROVAL FOR EACH STAGE OF INSPECTION. A VERBAL APPROVAL WILL NOT BE ACCEPTABLE. INSPECTIONS ARE REQUIRED:
   a. AFTER COMPLETION OF FINAL GRADING AND WHEN ALL UTILITY SERVICES AND SEWER LATERALS HAVE BEEN MARKED, BUT PRIOR TO DIGGING PLANT PITS, ALL FINAL STREET TREE LOCATIONS ARE TO BE SPOTTED IN THE FIELD BY THE STREET TREE INSPECTOR.
   b. WHILE DIGGING PLANT PITS AND PLANTING/RELOCATING TREES.
   c. AFTER PLANTING AND ALL OTHER INDICATED OR SPECIFIED WORK HAS BEEN COMPLETED, FOR START OF MAINTENANCE.
   d. AT END OF MAINTENANCE PERIOD, THE CONTRACTOR/DEVELOPER SHALL CALL THE STREET TREE INSPECTOR AT (909) 351-6126 FOR A FINAL ACCEPTANCE INSPECTION IN ORDER TO BE RELEASED FROM MAINTENANCE. DEVELOPERS BONDS WILL NOT BE RELEASED UNTIL AFTER RECEIPT OF WRITTEN NOTIFICATION FROM THE CITY THAT THE TREES PASS FINAL INSPESTION AND THE PARK AND RECREATION DEPT. IS ASSUMING MAINTENANCE RESPONSIBILITY.
3. THE CONTRACTOR SHALL BE RESPONSIBLE TO ACCEPTABLY MAINTAIN ALL PLANTINGS FOR A MINIMUM PERIOD OF ONE (1) YEAR.
4. STREET TREE PLANTING SHALL BE AS FOLLOWS:

STREET NAME	COMMON NAME/ BOTANICAL NAME	MIN. SIZE	APPROX. SPACING	NO. REQUIRED
MONROE	CALIFORNIA FAN PALM WASHINGTONIA FILIFERA	RELOCATE EXIST. PALMS TO PARK & REC. SPECS.		16

5. BOTH A STREET TREE RELOCATION/REMOVAL PERMIT AS ISSUED BY THE PARK AND RECREATION DEPARTMENT AND A STREET OPENING PERMIT AS ISSUED BY THE PUBLIC WORKS DEPARTMENT ARE REQUIRED PRIOR TO COMMENCEMENT OF TREE RELOCATION AND/OR REMOVAL WORK. FOR ALL EXISTING TREES WITHIN WHAT WILL ULTIMATELY BE THE PUBLIC RIGHT-OF-WAY PAVEMENT AREA, BACKFILL OF ALL HOLES MUST BE INSPECTED BY THE PUBLIC WORKS INSPECTOR FOR PROPER COMPACTION.

NOTE: IN THE INTEREST OF PUBLIC SAFETY AND MAINTENANCE, THE STREET TREE INSPECTOR SHALL HAVE THE AUTHORITY TO REVISE THE STREET TREE QUANTITIES AND LOCATIONS SHOWN ON APPROVED PLANS BASED UPON FIELD CONDITIONS FOUND AT THE TIME OF INSTALLATION OF THE TREES.

CONSTRUCTION NOTES:

- NUMBERS ABOVE 100 IN HEXAGON ON THE PLAN REFER TO THE RESPECTIVE STANDARD DRAWING AND SHALL BE CONSTRUCTED ACCORDINGLY.
- T II — TRANSPLANT CLASS II PALM TREE TO NEW LOCATION MARKED ✚.
- R I — REMOVE TREE, CLASS AS INDICATED.
- REM — REMOVE AND DISPOSE OF OFF SITE.
- REL — RELOCATE.
- ADJ — ADJUST TO GRADE.
- PIP — PROTECT IN PLACE.
- (1) — CONSTRUCT 4" A.C. PAVEMENT OVER 10" CRUSHED AGGREGATE BASE OR 8.5" A.C. OVER COMPACTED NATIVE.
- (4) — MODIFY IRRIGATION SYSTEM AND HYDROSEED GRADED AREAS TO MATCH EXISTING.

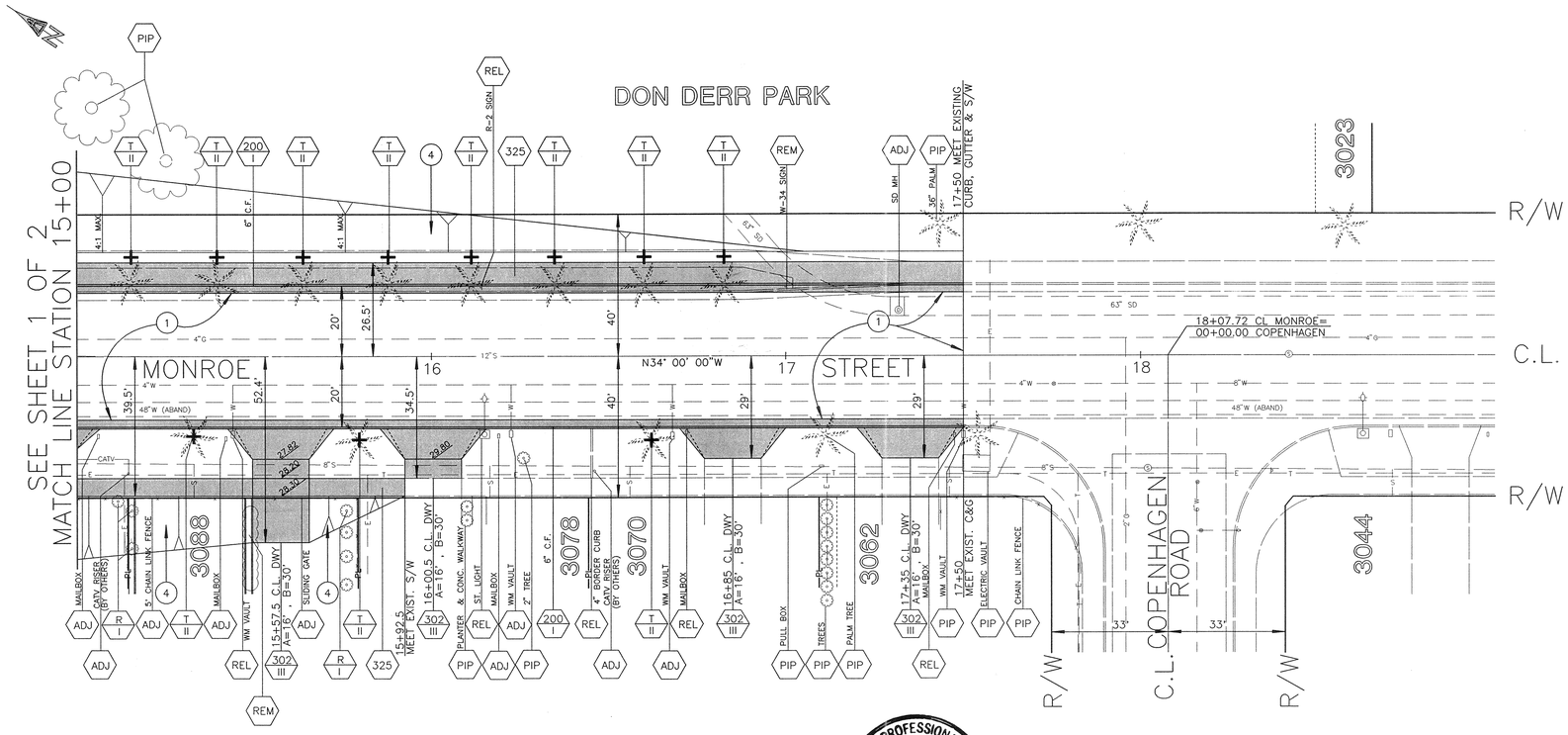

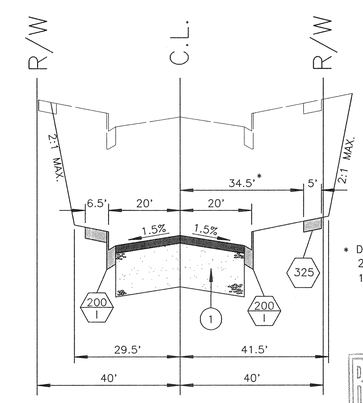

TYPICAL CROSS SECTION

FROM STA. 14+25 TO STA. 17+50
T.I.=6, R=13

* DIMENSION VARIES FROM 24' TO 34.5' BETWEEN STA. 14+30 AND STA. 15+00.

RECEIVED MAR 20 1995 PARK & RECREATION PLANNING & DESIGN

REGISTERED PROFESSIONAL ENGINEER DUANE K. GREENWOOD No. 43965 Exp. 6/30/97 CIVIL STATE OF CALIFORNIA

ENGINEER IN RESPONSIBLE CHARGE
DUANE K. GREENWOOD
R.C.E. No. 43965 EXPIRES 6/30/97
DATE 3/13/95

MARK	REVISIONS	APPR	DATE

DESIGNED BY P.H. DRAWN BY P.H. CHECKED BY

CITY OF RIVERSIDE, CALIFORNIA
PUBLIC WORKS DEPARTMENT

APPROVED BY	BY	DATE
DEPUTY P.W. DIRECTOR		3/14/95
PRINCIPAL ENGINEER		3/14/95
CHIEF P.W. INSPECTOR		3/14/95
TRAFFIC DIVISION		3/21/95
SURVEYOR		3-13-95
STREET DIVISION		3-16-95
PARKS DEPARTMENT		

APPROVED BY
PUBLIC WORKS DIRECTOR
DATE 3/14/95

MONROE STREET UNDERPASS

AT A.T. & S.F. RAILROAD CROSSING

HORIZ. SCALE: 1" = 20' VERT. SCALE: 1" = 8'

ACCOUNT NUMBER 230-541500-440223-30262

R-3385

SHEET 2 OF 2

FILE NO. : PC 3751-P