RIVERSIDE COUNTY FLOOD CONTROL AND WATER CONSERVATION DISTRICT

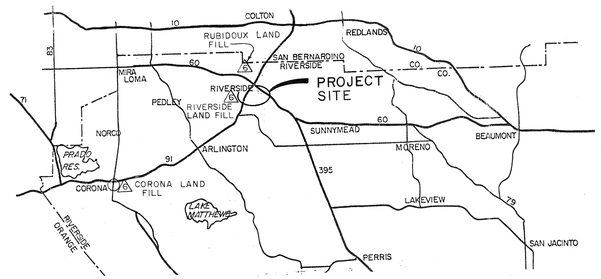

VICINITY MAP

0 1 2 3 4 5mi.

GENERAL NOTES

1. ALL STORM DRAIN STATIONING REFERS TO CENTERLINE OF CONSTRUCTION.
2. BASIN STATIONING REFERS TO NORTHERLY PROPERTY LINE.
3. OPENINGS RESULTING FROM THE CUTTING OR PARTIAL REMOVAL OF EXISTING CULVERTS, PIPES OR SIMILAR STRUCTURES SHALL BE SEALED WITH 6" OF CLASS "B" CONCRETE NOTED ON THE PLANS AS "PLUG".
4. ELEVATIONS OF UTILITIES ARE APPROXIMATE UNLESS NOTED OTHERWISE.
5. 48 HOURS BEFORE STORM DRAIN EXCAVATION, CALL UNDERGROUND SERVICE ALERT 1-800-422-4133.

(6) OPTIONAL DISPOSAL SITES, REFER TO SPECIFICATIONS.

INDEX

TITLE SHEET	1
BASIN PLAN VIEW	2-3
MONROE INLET/OUTLET PLAN & PROFILE	4
MONROE STREET INLET PLAN & PROFILE	5-6
MONROE STREET OUTLET PLAN & PROFILE	7
GRATTON STREET LATERAL PLAN & PROFILE	8
SPILLWAY DETAILS	9
INLET STRUCTURE DETAILS	10
MISCELLANEOUS DETAILS, RATING CURVES	11
DOWN DRAIN PROFILES	12
CROSS SECTIONS	13
TRAFFIC PLANS	14

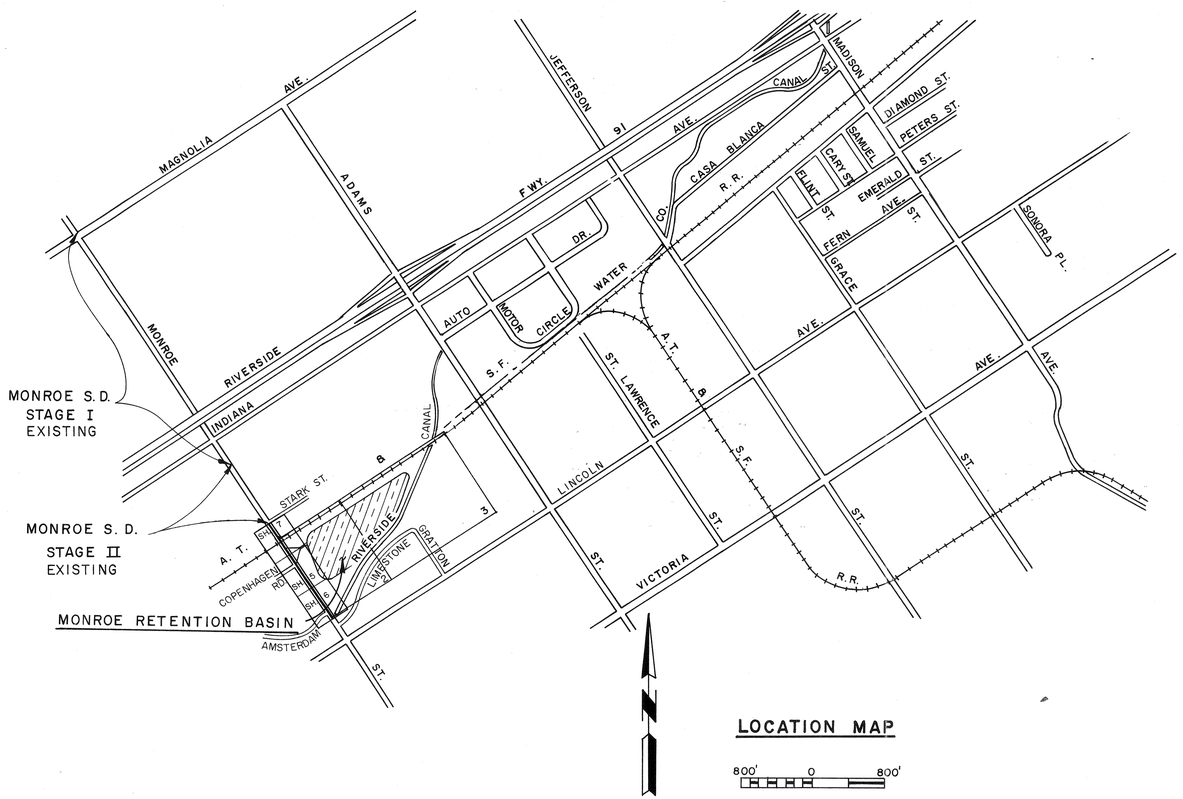

LOCATION MAP

800' 0 800'

R.C.F.C.D. & W.C.D. STANDARD DRAWINGS

CB 100	CATCH BASIN NO. 1	15
CB 103	MANHOLE FRAME AND COVER FOR C.B.	16
CB 105	DETAIL OF CATCH BASIN OPENING	17
LD 201	LOCAL DEPRESSION NO. 2	18
JS 229	JUNCTION STRUCTURE NO. 4	19
MH 252	MANHOLE NO. 2	20
MH 254	MANHOLE NO. 4	21 & 22
MH 255	MANHOLE FRAME & COVER NON-ROCKING	23
MH 257	MANHOLE SHAFT	24
MH 259	STANDARD DROP STEP	25
TS 303	TRANSITION STRUCTURE NO. 3	26
M 801	CHAIN LINK FENCE	27
M 803	CONCRETE COLLAR FOR PIPES	28
M 814	ABBREVIATIONS AND SYMBOLS	29
M 815	BEDDING AND PAY LINES	30
M 811	SIGNS & MARKER	31

CITY OF RIVERSIDE STANDARD DRAWINGS

NO. 200	CURB & GUTTER	32
NO. 221	SLOTTED CROSS GUTTERS	33
NO. 325	SIDEWALK	34
NO. 250	ASPHALT CONCRETE BERMS	35
NO. 304	WHEELCHAIR RAMPS	36 & 36A

REVISIONS			
REF.	DESCRIPTION	APPR.	DATE

RIVERSIDE COUNTY FLOOD CONTROL AND WATER CONSERVATION DISTRICT

DESIGNED BY: C. D. J.
DRAWN BY: A. A. S.
DATE DRAWN: 3-82
CHECKED BY: A.G.K.

APPROVED BY: Kenneth L. Edwards
CHIEF ENGINEER R.E. NO. 12400
DATE: 4-14-82

MONROE STORM DRAIN & RETENTION BASIN

TITLE SHEET

1970 STORM DRAIN BOND ISSUE PROJECT NO. 17

PROJECT NO. 1-0-071
DRAWING NO. 1-417
SHEET NO. 1 OF 36

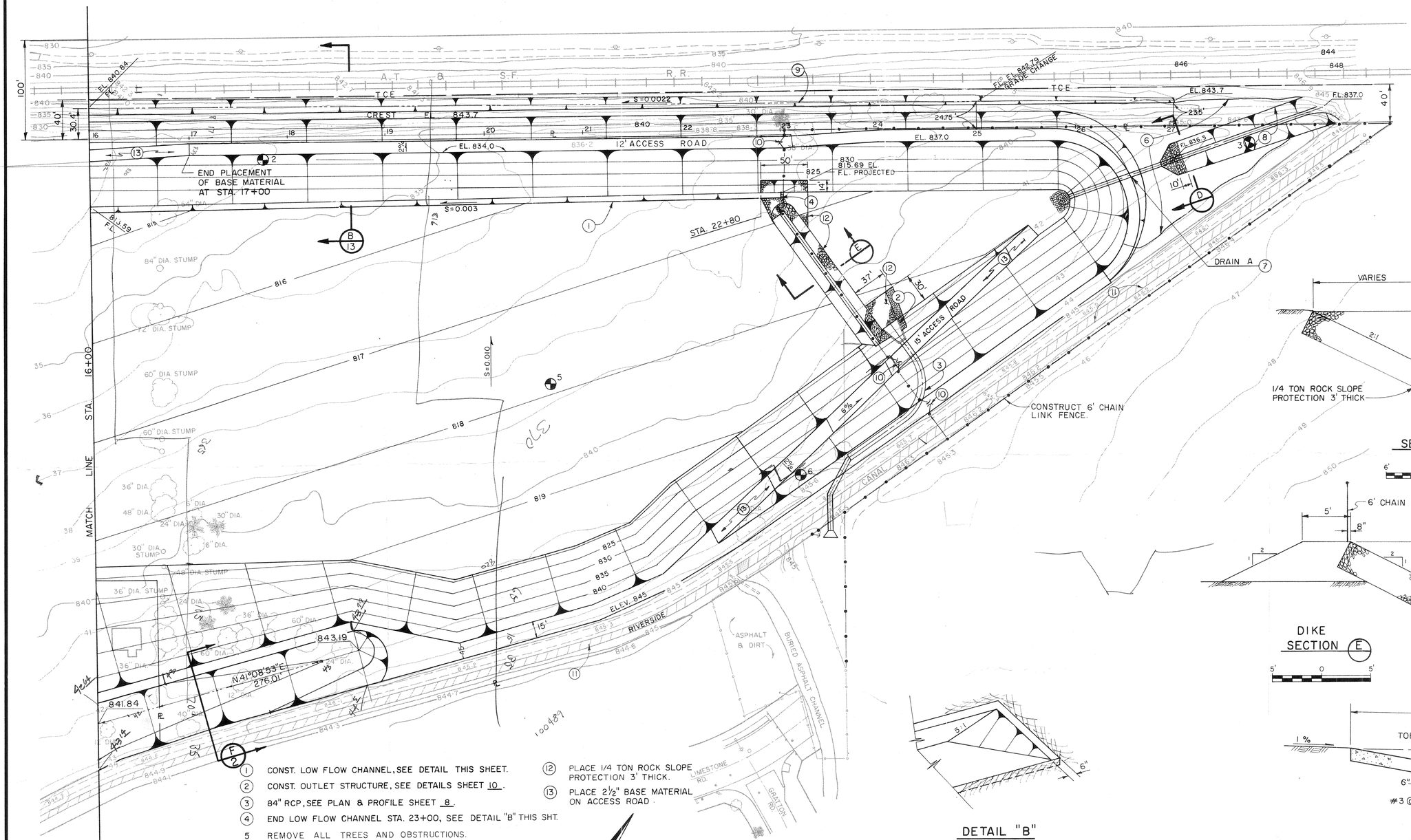

1. CONST. LOW FLOW CHANNEL, SEE DETAIL THIS SHEET.
2. CONST. OUTLET STRUCTURE, SEE DETAILS SHEET 10.
3. 84" RCP, SEE PLAN & PROFILE SHEET 8.
4. END LOW FLOW CHANNEL STA. 23+00, SEE DETAIL "B" THIS SHT.
5. REMOVE ALL TREES AND OBSTRUCTIONS.
6. FILL TO EL. 843.7.
7. 42" CMP DRAIN, SEE PROFILE SHEET 12.
8. GRADE TRAP DRAINAGE DITCH, B=4', SS 2:1
9. GRADE DRAINAGE DITCH. SEE SECTION B/13
10. INSTALL 14' METAL FRAME GATE.
11. PROTECT EXISTING CONC. CANAL
12. PLACE 1/4 TON ROCK SLOPE PROTECTION 3' THICK.
13. PLACE 2½" BASE MATERIAL ON ACCESS ROAD.

PLAN

1" = 50'

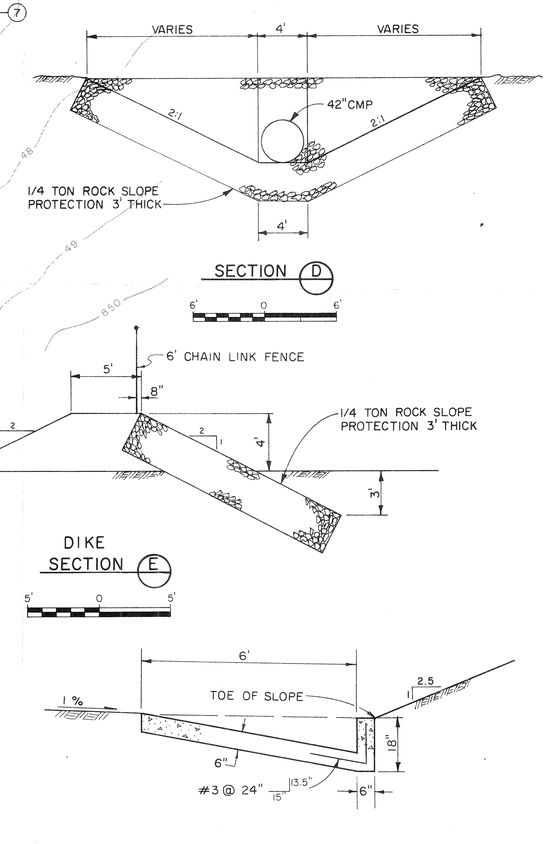

BENCH MARK:
CITY OF RIVERSIDE B.M. F5H, FOUND PK NAIL & TAG ON RIV. WATER CO. CANAL HEADWALL W'LY. SIDE MONROE STREET. EL. 845.60

REVISIONS			
REF.	DESCRIPTION	APPR.	DATE

RIVERSIDE COUNTY FLOOD CONTROL AND WATER CONSERVATION DISTRICT

DESIGNED BY: C.J.
DRAWN BY: R.A.S.
DATE DRAWN: 10-14-81
CHECKED BY: A.G.K.
APPROVED BY: Kenneth L. Edwards, CHIEF ENGINEER R.E. NO. 12400
DATE: 4-14-82

MONROE STORM DRAIN

MONROE RETENTION BASIN

1970 STORM DRAIN BOND ISSUE PROJECT NO. 17

PROJECT NO. 1-0-071
DRAWING NO. 1-417
SHEET NO. 3 OF 36

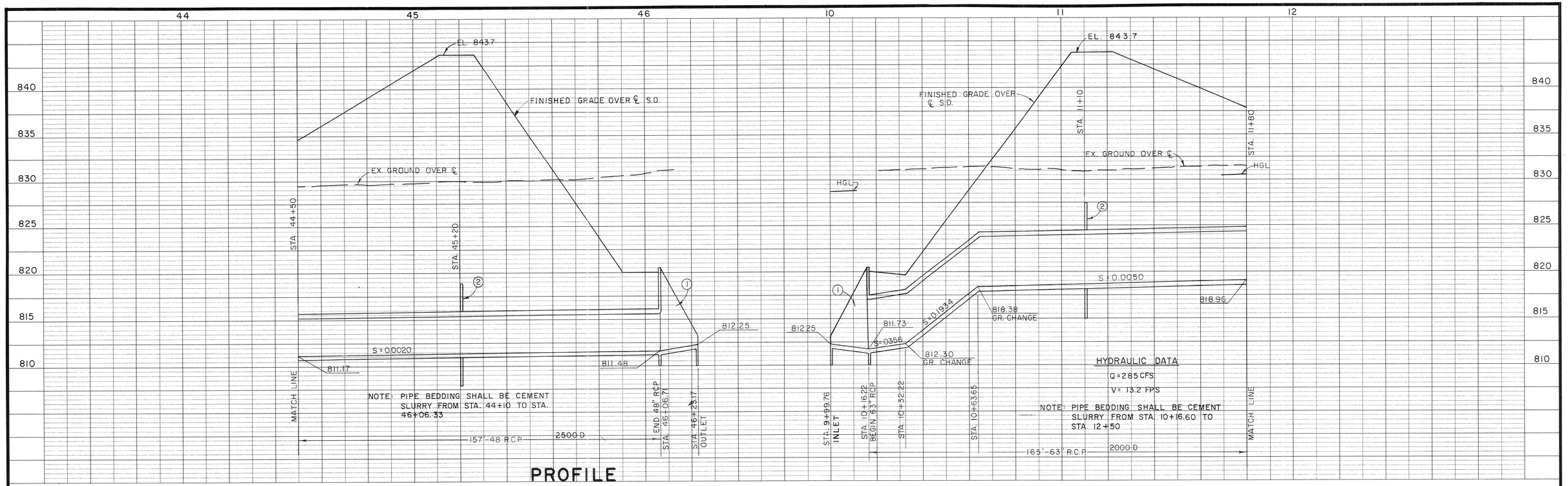

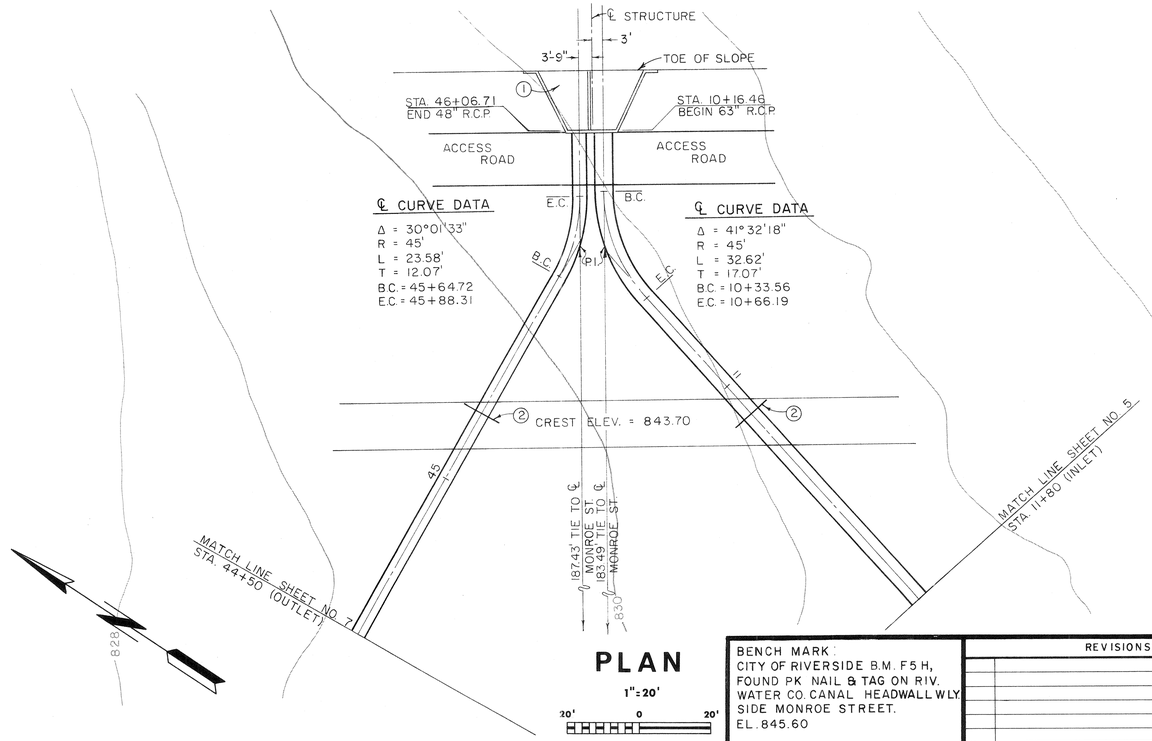

PLAN

1" = 20'

20' 0 20'

① CONSTRUCT INLET/OUTLET STRUCTURE. SEE DETAILS SHEET 10.

② CONSTRUCT CEMENT SLURRY COLLAR, SEE DETAIL THIS SHEET.

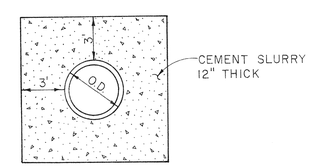

CEMENT SLURRY COLLAR
N.T.S.

BENCH MARK:
CITY OF RIVERSIDE B.M. F5H, FOUND PK NAIL & TAG ON RIV. WATER CO. CANAL HEADWALL W'LY. SIDE MONROE STREET. EL. 845.60

REVISIONS			
REF.	DESCRIPTION	APPR.	DATE

RIVERSIDE COUNTY FLOOD CONTROL AND WATER CONSERVATION DISTRICT

DESIGNED BY: C.J.
DRAWN BY: D.L.P.
DATE DRAWN: 10-81
CHECKED BY: A.G.K.

APPROVED BY: Kenneth L. Edwards
CHIEF ENGINEER R.E. NO. 12400
DATE: 4-14-82

MONROE STORM DRAIN

MONROE STREET INLET/OUTLET

1970 STORM DRAIN BOND ISSUE PROJECT NO. 17

PROJECT NO. 1-0-071
DRAWING NO. 1-417
SHEET NO. 4 OF 36

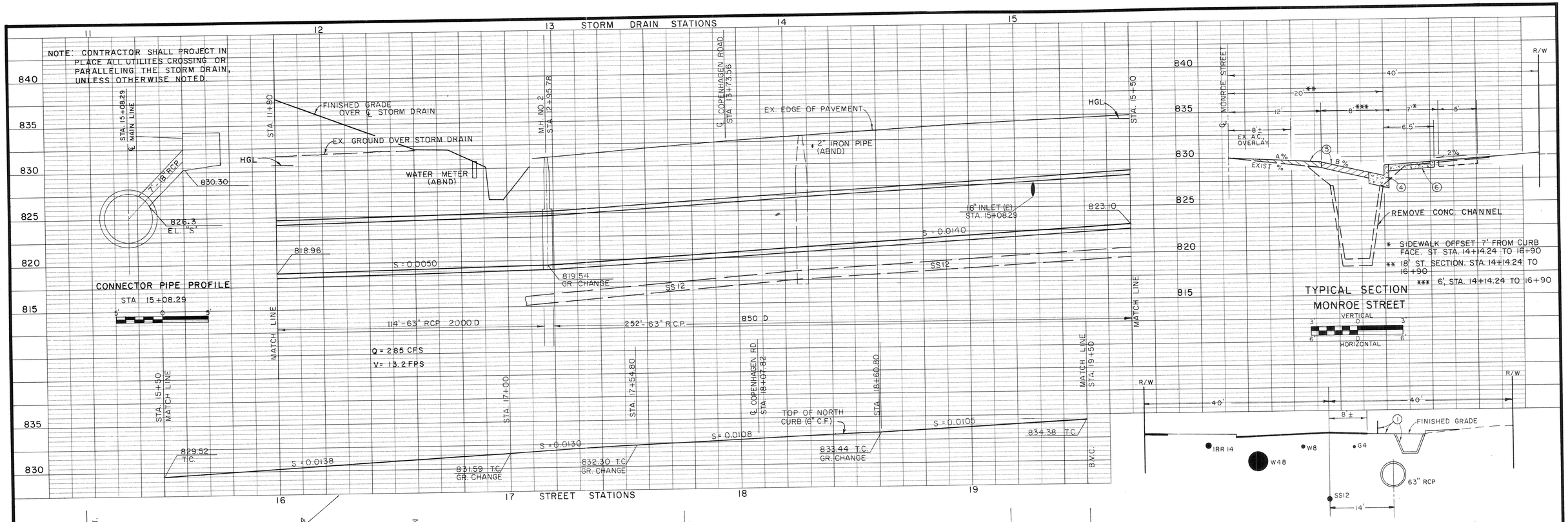

SECTION AT STA. 14+50 (STORM DRAIN)

10' 0 10'

MONROE STREET

CROSS SLOPE TABLE

STATION	EXIST %	A %	B %
15+00	3.63	1.11	6.66
16+00	6.00	1.98	6.66
17+00	5.25	0.22	6.66
18+00	4.50	0.66	5.00
19+00	1.88	1.98	5.00
20+00	1.13	2.44	5.00
21+00	1.50	1.32	5.00
22+00	2.25	2.04	5.00
23+00	5.13	1.53	5.00

1. REMOVE EXISTING CHANNEL & WOOD POSTS.
2. CONSTRUCT STREET IMPROVEMENTS, STREET STA. 15+50 TO 19+50. SEE SECTION DETAIL AND CURB PROFILE THIS SHEET.
3. C.B. NO. 1, W=7', V=4', 7'-18" RCP CLASS IV, SEE PROFILE THIS SHEET.
4. CONSTRUCT CURB & GUTTER (6" CURB FACE).
5. PLACE 3" A.C. OVER 9" OF BASE.
6. CONSTRUCT CURB SIDEWALK.

BENCH MARK:
CITY OF RIVERSIDE B.M. F5H, FOUND PK NAIL & TAG ON RIV. WATER CO. CANAL HEADWALL, W'LY SIDE MONROE STREET. ELEV. 845.60

REVISIONS			
REF.	DESCRIPTION	APPR.	DATE

RIVERSIDE COUNTY FLOOD CONTROL AND WATER CONSERVATION DISTRICT

DESIGNED BY: C.J.
DRAWN BY: D.L.P.
DATE DRAWN: 9-81
CHECKED BY: A.G.K.

APPROVED BY: Kenneth L. Schwartz
CHIEF ENGINEER R.E. NO. 12400
DATE: 11-14-82

MONROE STORM DRAIN

MONROE STREET INLET

STA. 11+80 TO 15+50

1970 STORM DRAIN BOND ISSUE PROJECT NO. 17

PROJECT NO. 1-0-071
DRAWING NO. 1-417
SHEET NO. 5 OF 36

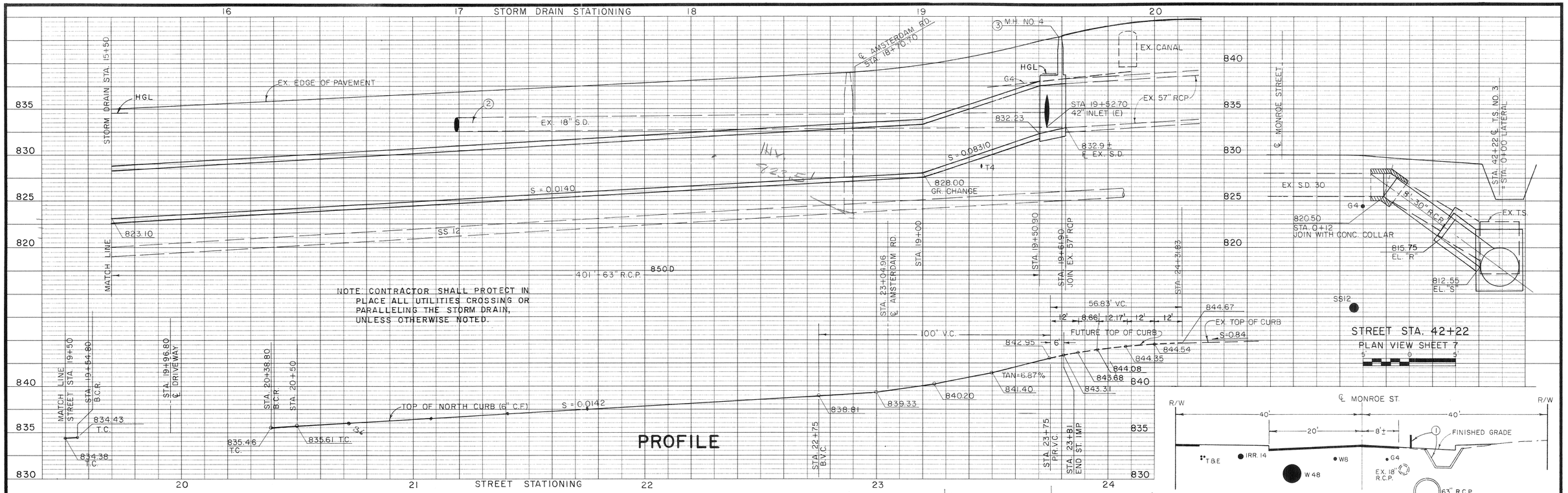

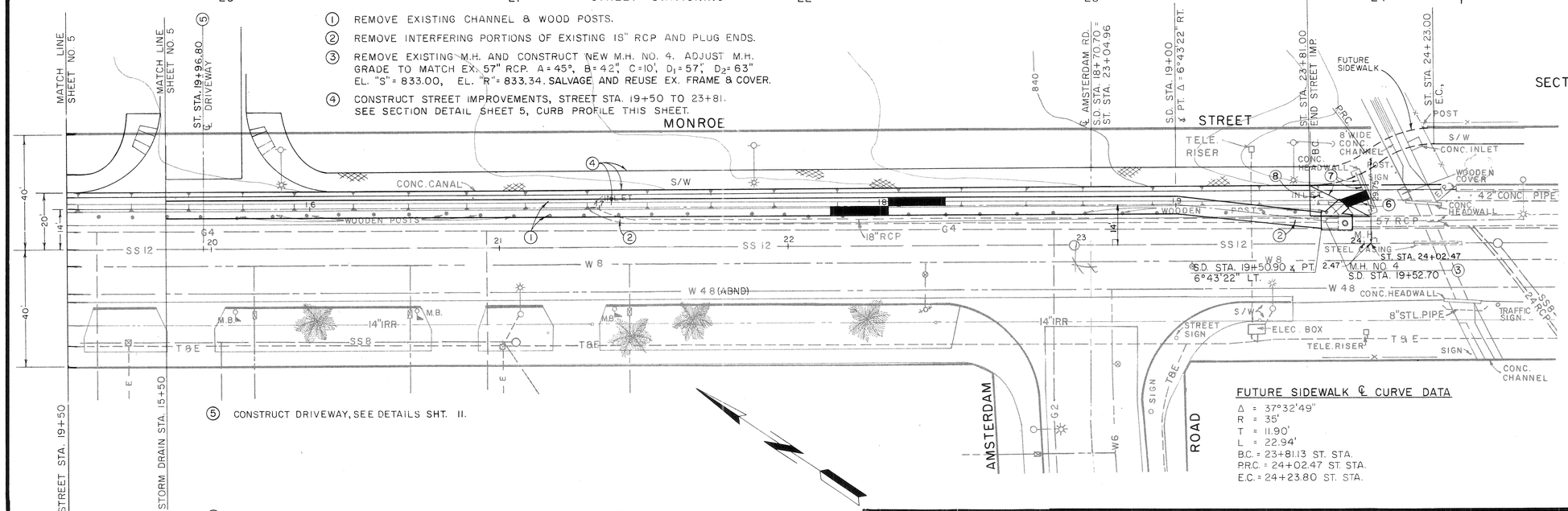

① REMOVE EXISTING CHANNEL & WOOD POSTS.

② REMOVE INTERFERING PORTIONS OF EXISTING 18" RCP AND PLUG ENDS.

③ REMOVE EXISTING M.H. AND CONSTRUCT NEW M.H. NO. 4. ADJUST M.H. GRADE TO MATCH EX. 57" RCP. A = 45°, B = 42", C = 10', D_1 = 57", D_2 = 63" EL. "S" = 833.00, EL. "R" = 833.34. SALVAGE AND REUSE EX. FRAME & COVER.

④ CONSTRUCT STREET IMPROVEMENTS, STREET STA. 19+50 TO 23+81. SEE SECTION DETAIL SHEET 5, CURB PROFILE THIS SHEET.

⑤ CONSTRUCT DRIVEWAY, SEE DETAILS SHT. 11.

⑥ PLACE 8'-42" RCP 1000D, CONNECT TO EXISTING CONC. ARCH WITH CONC. COLLAR.

⑦ FILL TO MATCH SURROUNDING GROUND.

⑧ CONST. A.C. TAPER, 3" THICK OVER COMPACTED SOIL.

PLAN

1" = 20'

20' 0 20'

FUTURE SIDEWALK ℄ CURVE DATA

Δ = 37°32'49"
R = 35'
T = 11.90'
L = 22.94'
B.C. = 23+81.13 ST. STA.
P.R.C. = 24+02.47 ST. STA.
E.C. = 24+23.80 ST. STA.

BENCH MARK:
CITY OF RIVERSIDE B.M. F5H, FOUND PK NAIL & TAG ON RIV. WATER CO. CANAL HEADWALL W'LY. SIDE MONROE STREET. EL. 845.60

REVISIONS			
REF.	DESCRIPTION	APPR.	DATE

RIVERSIDE COUNTY FLOOD CONTROL AND WATER CONSERVATION DISTRICT

DESIGNED BY: C.J.
DRAWN BY: D.L.P.
DATE DRAWN: 10-81
CHECKED BY: A.G.K.

APPROVED BY: Kenneth L. Quade
CHIEF ENGINEER R.E. NO. 12400
DATE: 4-14-82

MONROE STORM DRAIN
MONROE STREET INLET
STA. 15+50 TO 19+61

1970 STORM DRAIN BOND ISSUE PROJECT NO. 17

PROJECT NO. 1-0-071
DRAWING NO. 1-417
SHEET NO. 6 OF 36

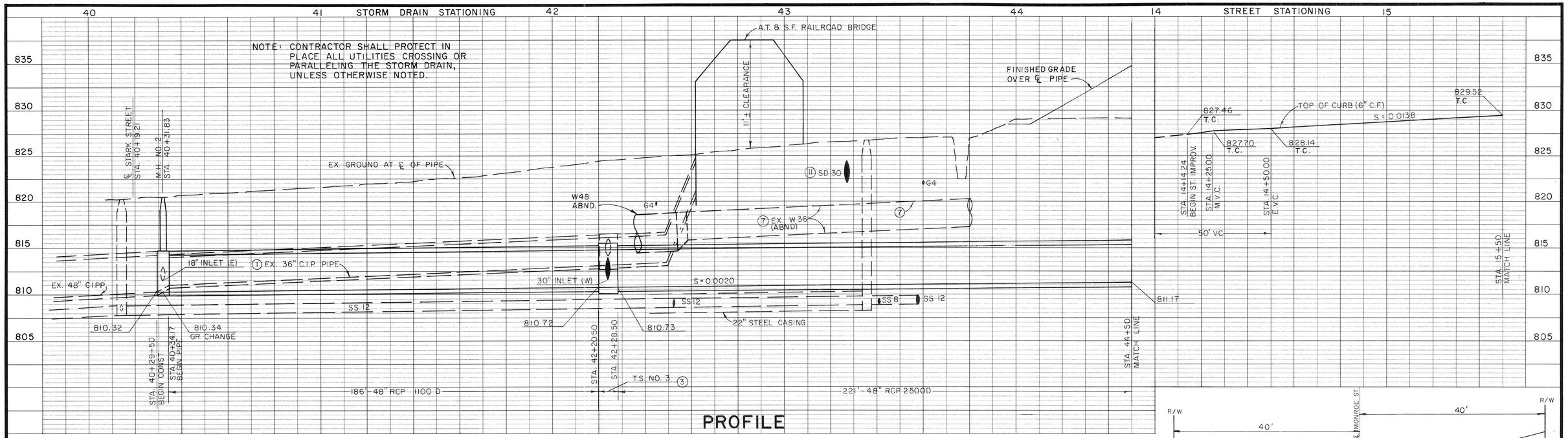

1. REMOVE INTERFERING PORTIONS OF EX. 36" C.I.P. PIPE.
2. REMOVE EX. M.H. AND CONSTRUCT NEW M.H. NO. 2. SALVAGE & REUSE EX. FRAME & COVER. RE-CONNECT EX. 18" CONNECTOR PIPE AT SAME GRADE.
3. T.S. NO. 3, A = 40°, B = 30", C = 7.3', D = 48".
4. REMOVE INTERFERING PORTIONS OF EX. S.D. 30. CONNECT WITH 8'-30" R.C.P. 1300 D. SEE PROFILE SHEET 6.
5. CONSTRUCT STREET IMPROVEMENTS, STREET STA. 14+14.24 TO STA. 15+50. SEE SECTION DETAIL SHEET 5, CURB PROFILE THIS SHEET.
6. REMOVE EX. CHANNEL & WOOD POSTS.
7. REMOVE 95'± OF INTERFERING PORTIONS OF ABND. TECHITE PIPE AND RECONNECT. SEE SPECIFICATIONS.
8. REMOVE ROCK WALL.
9. CONSTRUCT A.C. TAPER, 3" THICK OVER COMPACTED SOIL.
10. CONSTRUCT A.C. BERM, TYPE I.
11. REMOVE INTERFERING PORTIONS OF EX. 30" S.D., PLUG BOTH ENDS.
12. CRUSH EX. CANAL IN PLACE. FILL TO MATCH SURROUNDING GRADE.
13. INSTALL GUIDE MARKERS AS SHOWN.

BENCH MARK:
CITY OF RIVERSIDE B.M. F5 H, FOUND PK NAIL & TAG ON RIV. WATER CO. CANAL HEADWALL W'LY SIDE MONROE STREET. EL. 845.60

REVISIONS			
REF.	DESCRIPTION	APPR.	DATE

RIVERSIDE COUNTY FLOOD CONTROL AND WATER CONSERVATION DISTRICT

DESIGNED BY: C.J.
DRAWN BY: D.L.P.
DATE DRAWN: 10-81
CHECKED BY: A.G.K.

APPROVED BY: Kenneth L. Edwards
CHIEF ENGINEER R.E. NO. 12400
DATE: 11-14-82

MONROE STORM DRAIN

MONROE BASIN OUTLET STA. 40+29.50 TO 44+50

1970 STORM DRAIN BOND ISSUE PROJECT NO. 17

PROJECT NO. 1-0-071
DRAWING NO. 1-417
SHEET NO. 7 OF 36

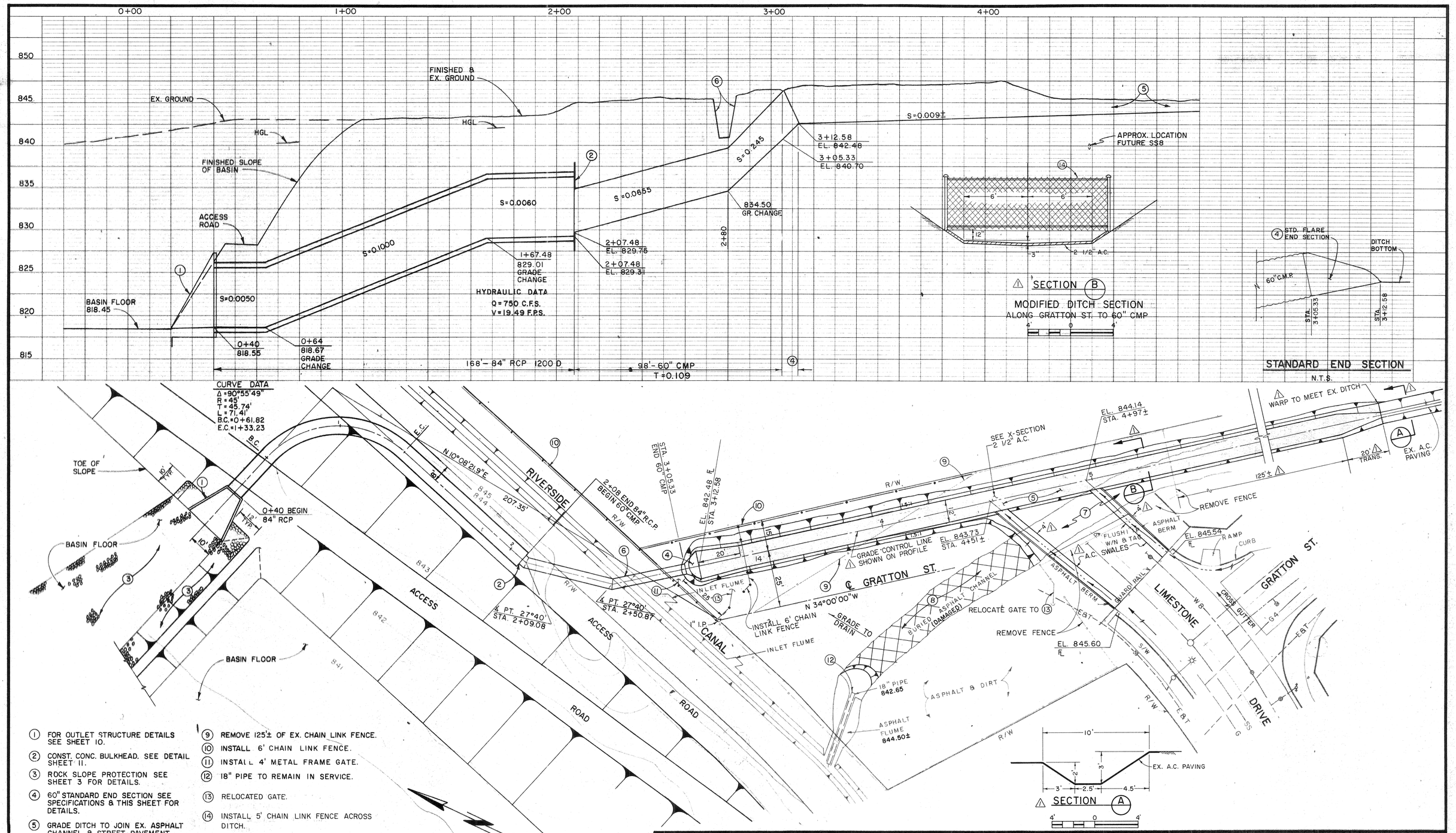

1. FOR OUTLET STRUCTURE DETAILS SEE SHEET 10.
2. CONST. CONC. BULKHEAD. SEE DETAIL SHEET 11.
3. ROCK SLOPE PROTECTION SEE SHEET 3 FOR DETAILS.
4. 60" STANDARD END SECTION SEE SPECIFICATIONS & THIS SHEET FOR DETAILS.
5. GRADE DITCH TO JOIN EX. ASPHALT CHANNEL & STREET PAVEMENT.
6. REMOVE & REPLACE INTERFERING PORTIONS OF EX. CANAL.
7. REMOVE INTERFERING PORTIONS OF BURIED ASPHALT CHANNEL.
8. FILL TO ADJACENT GROUND LEVEL.
9. REMOVE 125'± OF EX. CHAIN LINK FENCE.
10. INSTALL 6' CHAIN LINK FENCE.
11. INSTALL 4' METAL FRAME GATE.
12. 18" PIPE TO REMAIN IN SERVICE.
13. RELOCATED GATE.
14. INSTALL 5' CHAIN LINK FENCE ACROSS DITCH.

BENCH MARK:

CITY OF RIVERSIDE 8 M. F5H, FOUND PK NAIL & TAG ON RIV. WATER CO. CANAL HEADWALL, W'LY SIDE MONROE STREET. ELEV. 845.60

REVISIONS			
1	A.C. PAVING ADDED TO DITCH		1-5-83
REF.	DESCRIPTION	APPR.	DATE

RIVERSIDE COUNTY FLOOD CONTROL AND WATER CONSERVATION DISTRICT

DESIGNED BY: J.R.C.
DRAWN BY: R.A.S.
DATE DRAWN: 10-19-81
CHECKED BY: A.G.K.

APPROVED BY: Kenneth L. Lawson
CHIEF ENGINEER R.E. NO. 12400
DATE: 11-14-82

MONROE STORM DRAIN

MONROE BASIN
GRATTON ST. LATERAL

1970 STORM DRAIN BOND ISSUE PROJECT NO. 17

PROJECT NO. 1-0-071
DRAWING NO. 1-417
SHEET NO. 8 OF 36

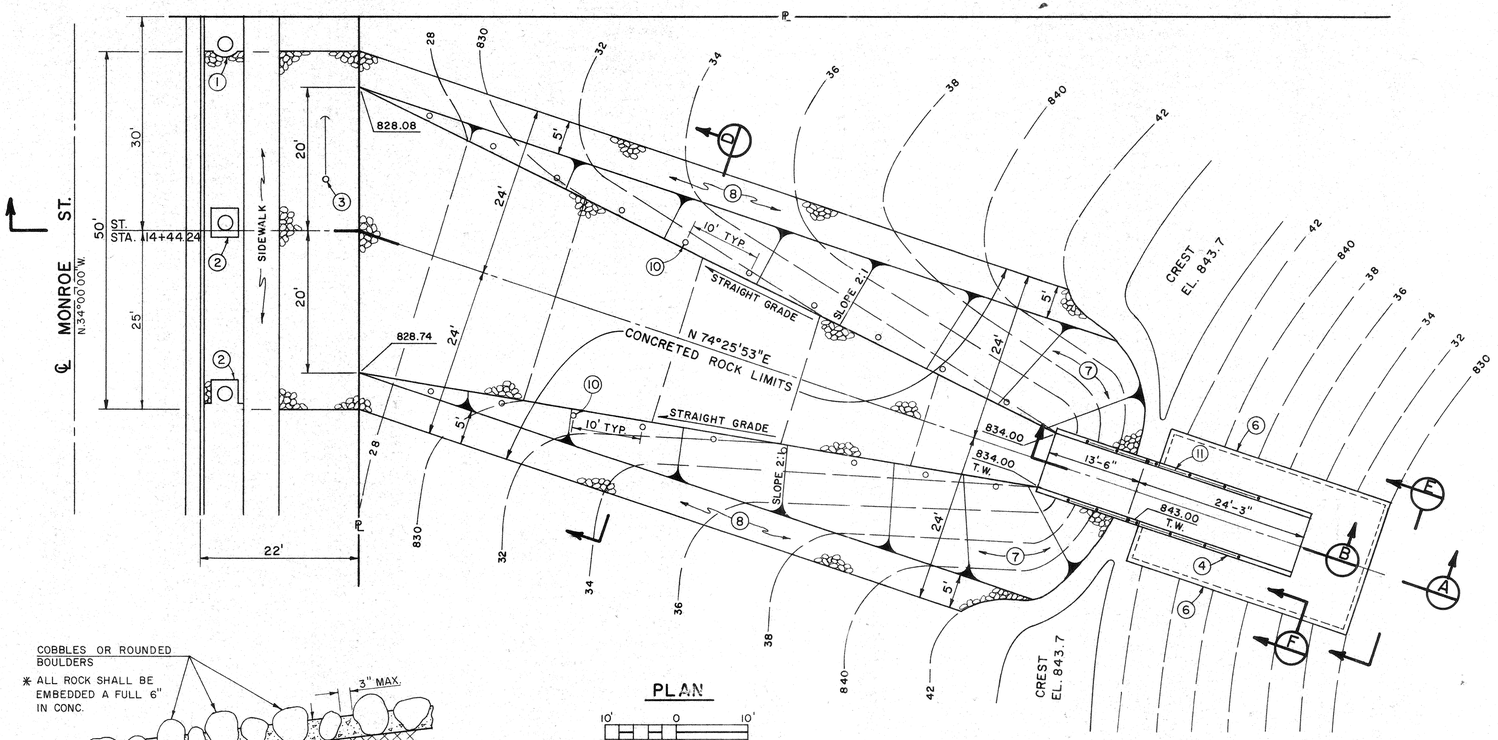

PLAN

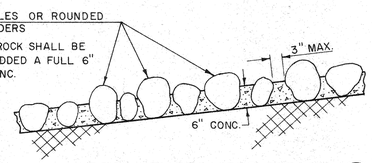

ROCK EMBEDMENT DETAIL (G)
N.T.S.

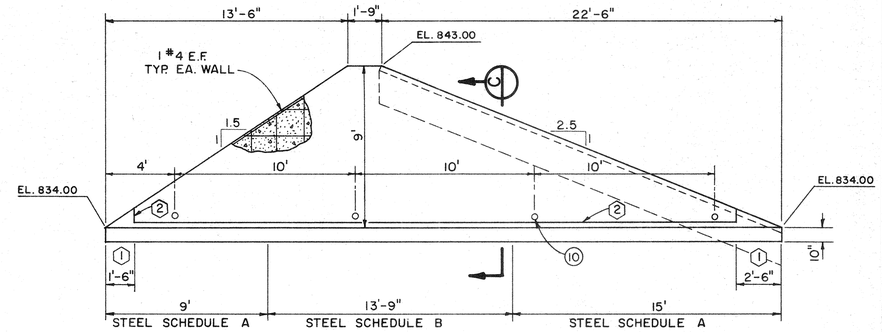

SECTION (B)

1. OMIT M BAR, CUT VERT. LEG OF N BAR TO FIT.
2. CONSTRUCTION JOINT

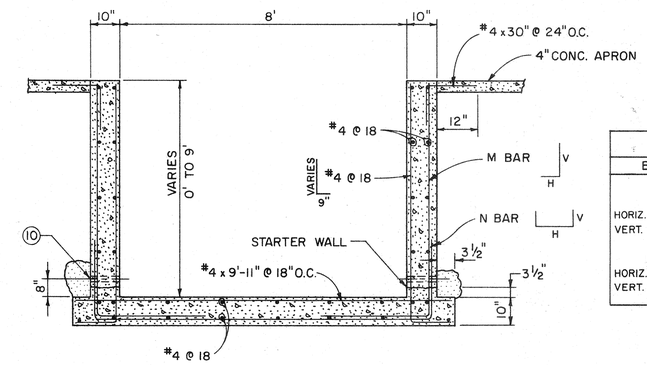

SECTION (C)

STEEL SCHEDULE		
BAR	A	B
M	#4 @ 12	#6 @ 12
HORIZ. LENGTH	3'-3"	3'-9"
VERT. LENGTH	VARIES	VARIES
N	#4 @ 12	#7 @ 12
HORIZ. LENGTH	9'-5"	9'-5"
VERT. LENGTH	2'-4"	3'-8"

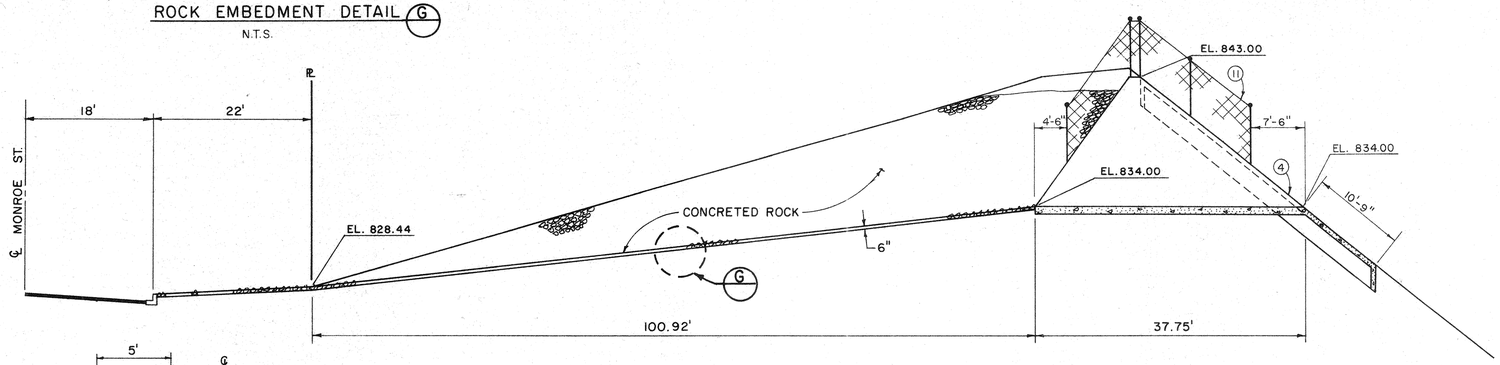

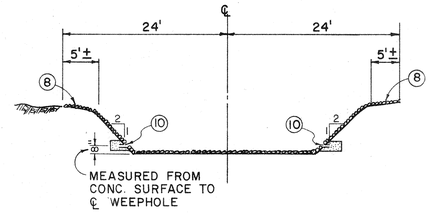

SECTION (D)
N.T.S.

NOTES

1. PROVIDE 1' CLEARANCE AROUND TREE.
2. 4' x 4' OPENING AROUND TREES.
3. POWER POLE & ANCHOR PROTECT IN PLACE.
4. PRIMARY SPILLWAY SEE DETAILS THIS SHEET.
5. FOR SITE PLAN SEE SHEET 2.
6. CUTOFF WALL ALL AROUND APRON PER SEC (F)
7. SLOPE VARIES 1.5:1 TO 2:1.
8. "WARP" TO MEET EMBANKMENT.
9. STEEL SHALL HAVE 1½" CLEARANCE ON INSIDE WALL & TOP OF SLAB, 2" CLEARANCE ON OUTSIDE WALL, & 3" CLEARANCE ON BOTTOM OF SLAB.
10. CONSTRUCT 1 1/2" DIA. WEEPHOLES WITH RODENT SCREEN & 1 CU. FT. OF FILTER MATERIAL AT EACH HOLE.
11. CONSTRUCT 4' CHAIN LINK FENCE.

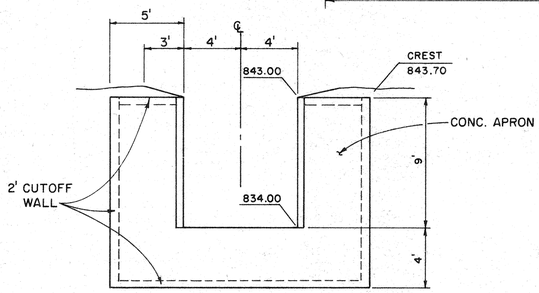

SECTION (E)

SECTION (A)

HORIZONTAL
VERTICAL

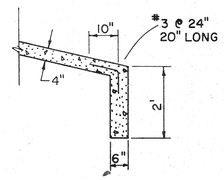

CUTOFF WALL DETAIL
SECTION (F)
N.T.S.

REVISIONS			
REF.	DESCRIPTION	APPR.	DATE

RIVERSIDE COUNTY FLOOD CONTROL AND WATER CONSERVATION DISTRICT

DESIGNED BY: C.J.
DRAWN BY: R.A.S.
DATE DRAWN: 3-17-82
CHECKED BY: A.G.K.
APPROVED BY: Kenneth L. Schroeder
CHIEF ENGINEER R.E. NO. 12400
DATE: 4-14-82

MONROE STORM DRAIN

SPILLWAY DETAILS

1970 STORM DRAIN BOND ISSUE PROJECT NO 17

PROJECT NO. 1-0-071
DRAWING NO. 1-417
SHEET NO. 9 OF 36

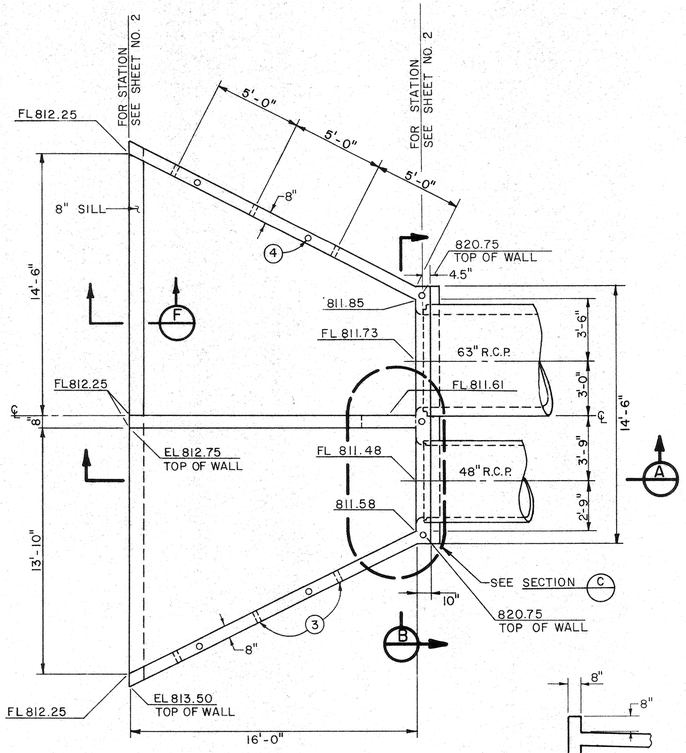

PLAN VIEW

INLET-OUTLET STRUCTURE 6

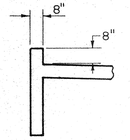

SECTION F

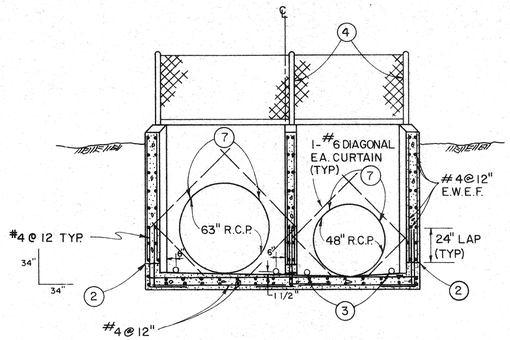

SECTION B

INLET - OUTLET STRUCTURE

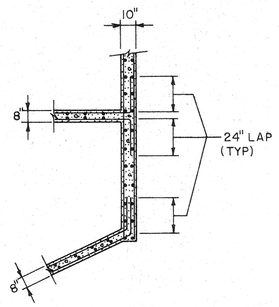

SECTION C

INLET-OUTLET STRUCTURE
INTERSECTING WALL & CORNER DETAILS
TYPICAL ALL CORNERS & INTERSECTIONS

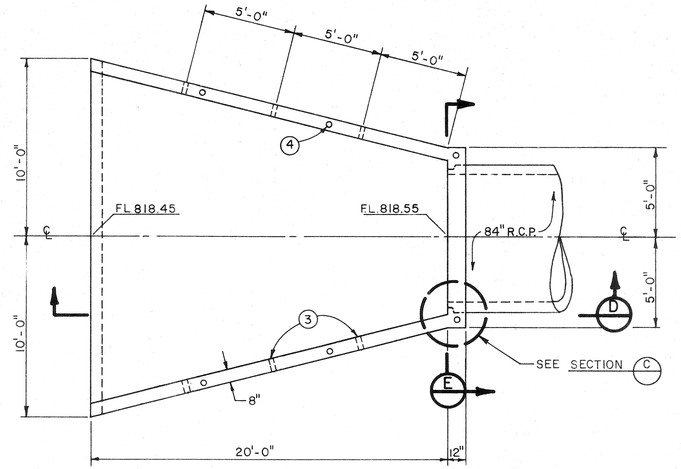

PLAN VIEW

GRATTON OUTLET 5

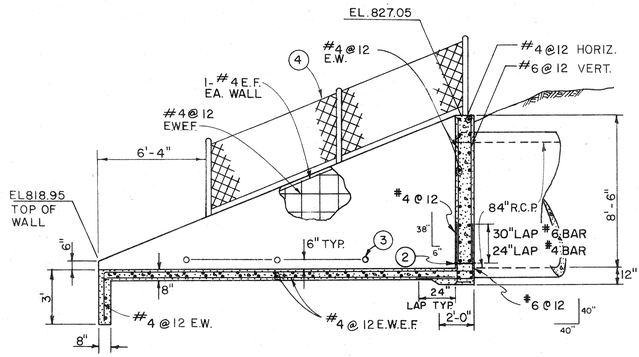

SECTION D

GRATTON OUTLET

NOTES

1. ALL STEEL SHALL HAVE 1 1/2" CLEAR COVER ON INSIDE FACE OF WALLS & SLAB, 2" CLEAR COVER ON OUTSIDE FACE OF WALLS & 3" ON BOTTOM FACE OF SLAB.
2. 3 1/2" STARTER WALL WITH CONST. JOINT TO BE USED IN ALL CASES.
3. CONST. 1 1/2" ϕ WEEPHOLES WITH RODENT SCREEN & 1 CU. FT. OF FILTER MAT'L AT EA. HOLE.
4. CONSTRUCT 4' CHAIN LINK FENCE.
5. FOR SITE VIEW OF GRATTON OUTLET SEE SHEETS 3 & 8.
6. FOR SITE VIEW OF THE INLET-OUTLET SEE SHEETS 2 & 4.
7. SEE SHEET 11 FOR INLET/OUTLET PIPE GRATE DETAILS.
8. LAPS REQUESTED BY THE CONTRACTOR FOR HIS CONVENIENCE SHALL BE SUBJECT TO APPROVAL BY THE ENGINEER.

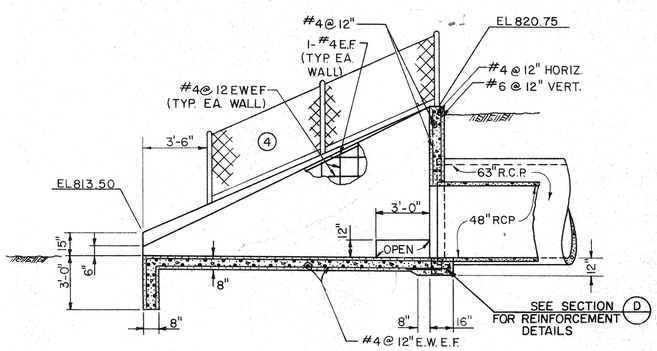

SECTION A

INLET-OUTLET STRUCTURE

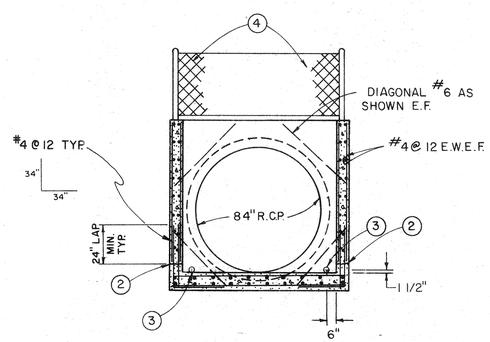

SECTION E

GRATTON OUTLET

REVISIONS			
REF.	DESCRIPTION	APPR.	DATE

RIVERSIDE COUNTY FLOOD CONTROL AND WATER CONSERVATION DISTRICT

DESIGNED BY: J.R.C.
DRAWN BY: R.A.H.
DATE DRAWN: 3-20-82
CHECKED BY:
APPROVED BY: Kenneth L. Edwards
CHIEF ENGINEER R.E. NO. 12400
DATE: 4-14-82

MONROE STORM DRAIN

INLET/OUTLET STRUCTURE DETAILS

1970 STORM DRAIN BOND ISSUE PROJECT NO. 17

PROJECT NO. 1-0-071
DRAWING NO. 1-417
SHEET NO. 10 OF 36

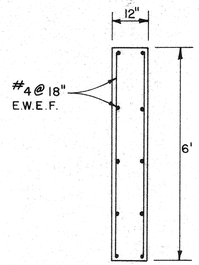

CUTOFF WALL DETAIL

2' 0 2'

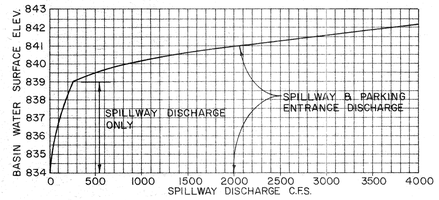

SPILLWAY DISCHARGE CURVE

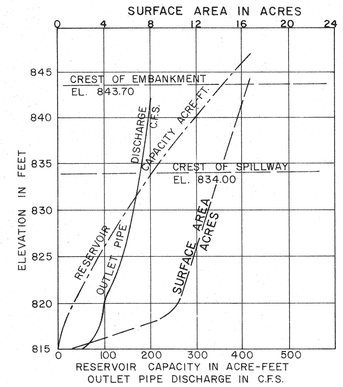

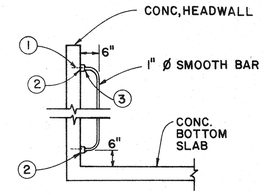

SECTION A-A
N.T.S.

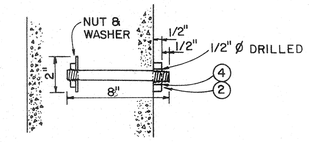

3/8" ANCHOR BOLT DETAIL
N.T.S.

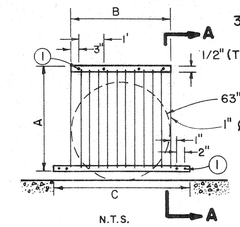

N.T.S.

PIPE SIZE	A	B	C
63"	5'-4"	5'-8"	6'-0"
48"	4'-0"	4'-2"	4'-10"

DIMENSION TABLE

1. ANCHORS INTO HEADWALL 8 EA. GRATE (TYP.)
2. 1 1/2" x 1/2" BAR (TYP)
3. 1/4" FILLET WELD ALL AROUND (TYP)
4. KEYED NUTS TO BE SUPPLIED BY R.C.F.C.

INLET – OUTLET STRUCTURE GRATE DETAILS

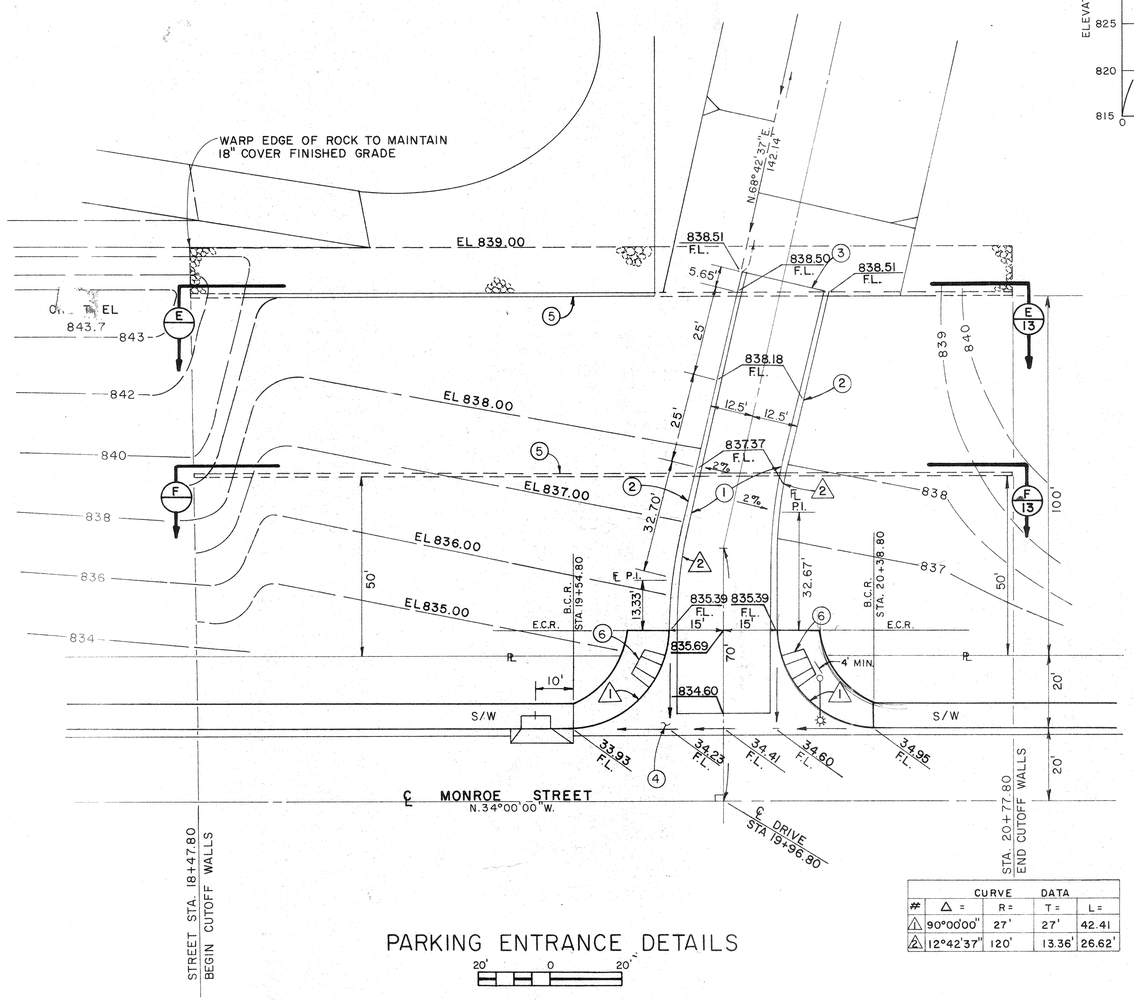

CURVE DATA				
#	Δ =	R =	T =	L =
1	90°00'00"	27'	27'	42.41
2	12°42'37"	120'	13.36'	26.62'

PARKING ENTRANCE DETAILS

20' 0 20'

PARKING ENTRANCE NOTES

1. PLACE 3" A.C. OVER 6" BASE
2. CONST. CURB & GUTTER (6" CURB FACE)
3. 2" x 4" REDWOOD HEADER
4. CONST. CONC. CROSS GUTTER. SEE SHEET NO. 33
5. CONST. CONC. CUTOFF WALL, SEE STRUCTURAL DETAILS THIS SHT. & GRADES SHEET NO. 13.
6. CONST. WHEELCHAIR RAMP. SEE SHEET NO. 36

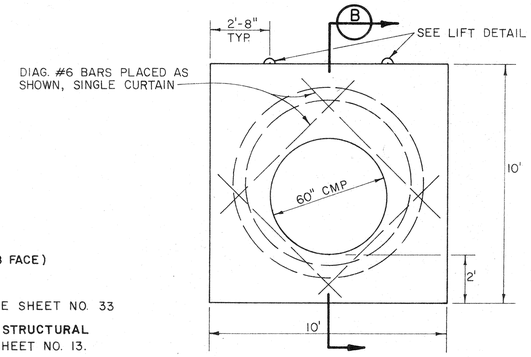

CONCRETE BULKHEAD

3' 0 3'

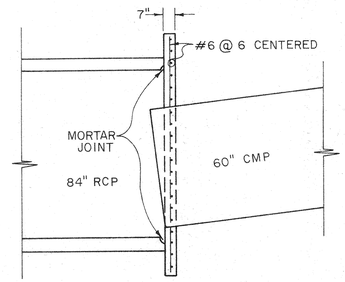

SECTION B

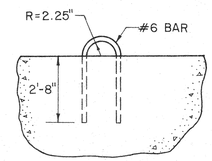

LIFT DETAIL

REVISIONS			
REF.	DESCRIPTION	APPR.	DATE

RIVERSIDE COUNTY FLOOD CONTROL AND WATER CONSERVATION DISTRICT

DESIGNED BY: C.J.
DRAWN BY: L.J.C.
DATE DRAWN: 2-82
CHECKED BY: A.G.K.

APPROVED BY: Kenneth L. Edwards
CHIEF ENGINEER R.E. NO. 12400
DATE: 4-14-82

MONROE STORM DRAIN

MISCELLANEOUS DETAILS

1970 STORM DRAIN BOND ISSUE PROJECT NO. 17

PROJECT NO. 1-0-071
DRAWING NO. 1-417
SHEET NO. 11 OF 36

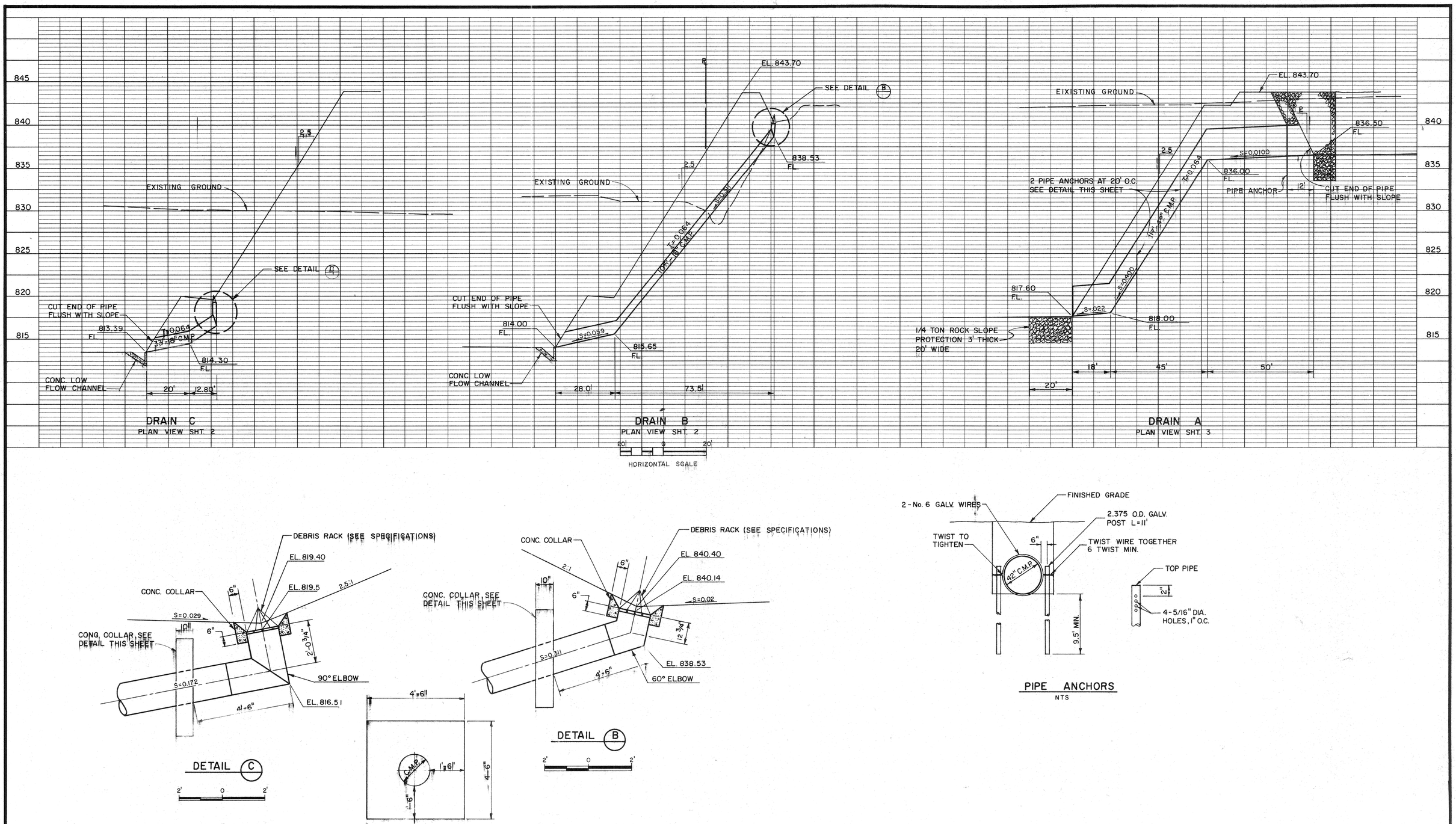

REVISIONS			
REF.	DESCRIPTION	APPR.	DATE

RIVERSIDE COUNTY FLOOD CONTROL AND WATER CONSERVATION DISTRICT

DESIGNED BY: G.J.
DRAWN BY: R.A.S.
DATE DRAWN: 10-21-81
CHECKED BY: A.G.K.

APPROVED BY: Kenneth A. Edwards
CHIEF ENGINEER R.E. NO. 12400
DATE: 11-14-81

MONROE STORM DRAIN
DRAIN PROFILES

1970 STORM DRAIN BOND ISSUE PROJECT NO. 17

PROJECT NO. 1-0-071
DRAWING NO. 1-417
SHEET NO. 12 OF 36

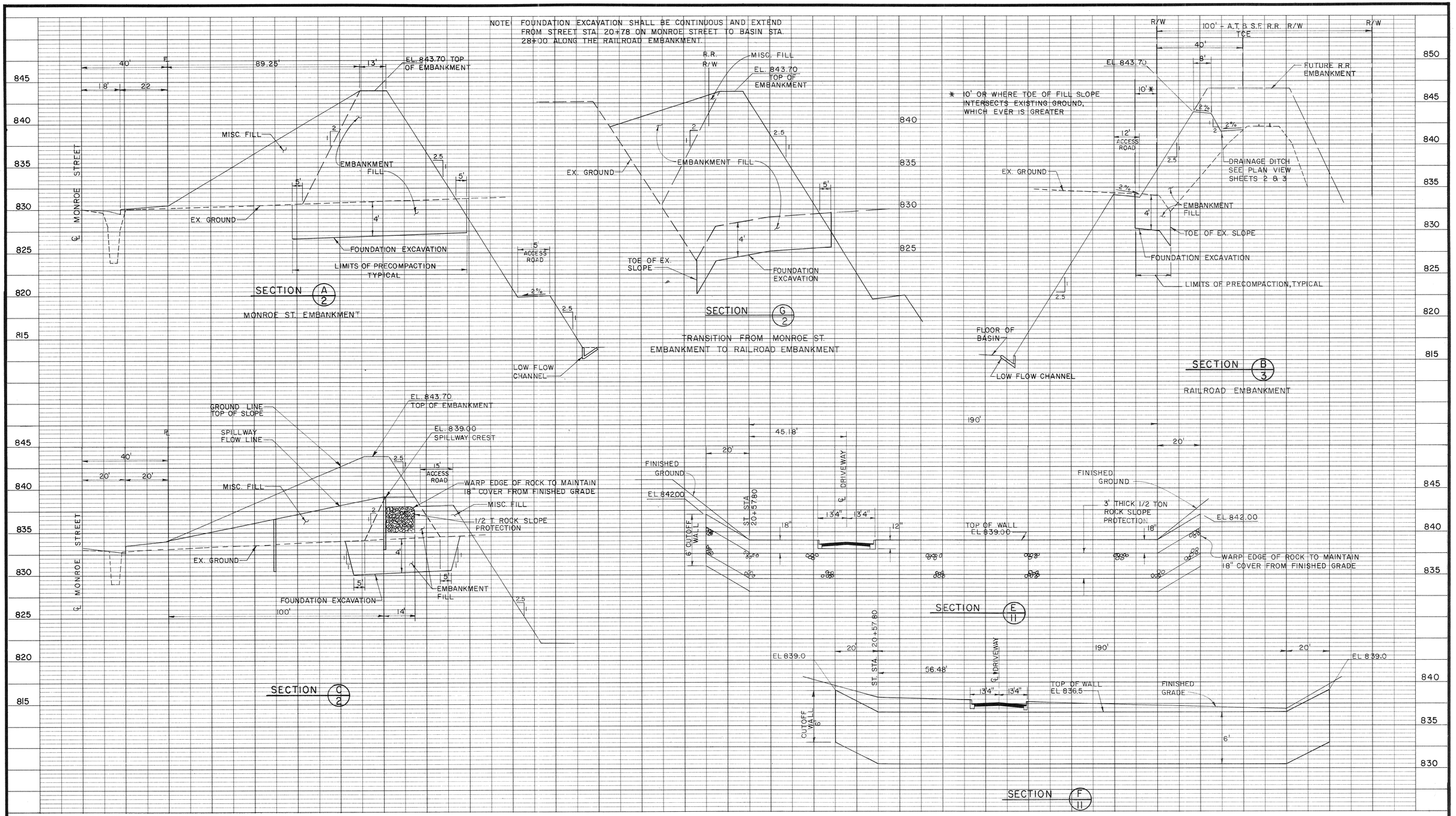

REVISIONS			
REF.	DESCRIPTION	APPR.	DATE

RIVERSIDE COUNTY FLOOD CONTROL AND WATER CONSERVATION DISTRICT

DESIGNED BY: C.J.
DRAWN BY: L.J.C.
DATE DRAWN: 2-82
CHECKED BY: A.G.K.

APPROVED BY: [signature]
CHIEF ENGINEER R.E. NO. 12400
DATE: 4-14-82

MONROE STORM DRAIN
CROSS SECTIONS

1970 STORM DRAIN BOND ISSUE PROJECT NO. 17

PROJECT NO. 1-0-071
DRAWING NO. 1-417
SHEET NO. 13 OF 36

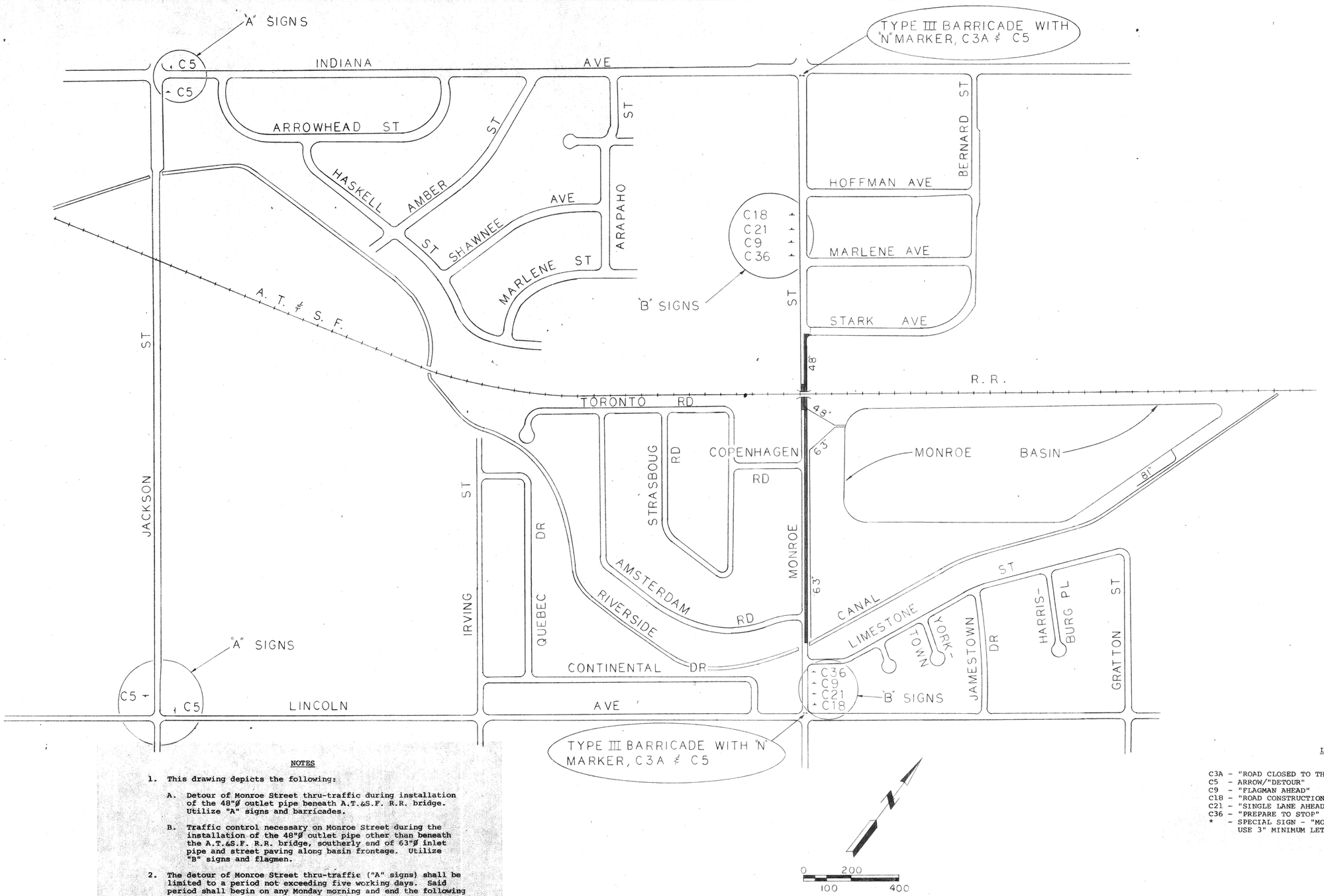

NOTES

1. This drawing depicts the following:

   A. Detour of Monroe Street thru-traffic during installation of the 48"Ø outlet pipe beneath A.T.&S.F. R.R. bridge. Utilize "A" signs and barricades.

   B. Traffic control necessary on Monroe Street during the installation of the 48"Ø outlet pipe other than beneath the A.T.&S.F. R.R. bridge, southerly end of 63"Ø inlet pipe and street paving along basin frontage. Utilize "B" signs and flagmen.

2. The detour of Monroe Street thru-traffic ("A" signs) shall be limited to a period not exceeding five working days. Said period shall begin on any Monday morning and end the following Friday evening.

3. The Contractor shall maintain continuous access to private property.

4. Flagmen shall wear a red flourescent vest and possess a C28 sign (slow and stop).

5. These are minimum signing requirements. Additional flagmen or signs may be required to facilitate public safety and traffic flow if deemed necessary by the Engineer.

LEGEND

C3A - "ROAD CLOSED TO THRU TRAFFIC"
C5 - ARROW/"DETOUR"
C9 - "FLAGMAN AHEAD"
C18 - "ROAD CONSTRUCTION AHEAD"
C21 - "SINGLE LANE AHEAD"
C36 - "PREPARE TO STOP"
* - SPECIAL SIGN - "MONROE STREET DETOUR" USE 3" MINIMUM LETTER HEIGHT

REVISIONS			
REF.	DESCRIPTION	APPR.	DATE

RIVERSIDE COUNTY FLOOD CONTROL AND WATER CONSERVATION DISTRICT

DESIGNED BY: JRC/AGK
DRAWN BY: JRC
DATE DRAWN: MAR 22 '82
CHECKED BY: AGK

APPROVED BY:
CHIEF ENGINEER R.E. NO. 12400
DATE:

MONROE STORM DRAIN

TRAFFIC PLANS

PROJECT NO. 1-0-071
DRAWING NO. 1-417
SHEET NO. 14 OF