COLLETT PARK

10950 Collett Avenue Riverside, CA

City of Riverside - Department of Park and Recreation
3900 Main Street Riverside, CA 92522

VICINITY MAP

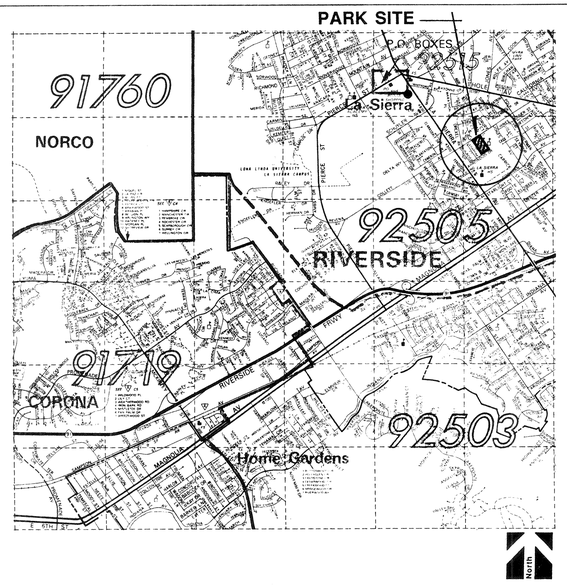

LOCATION MAP

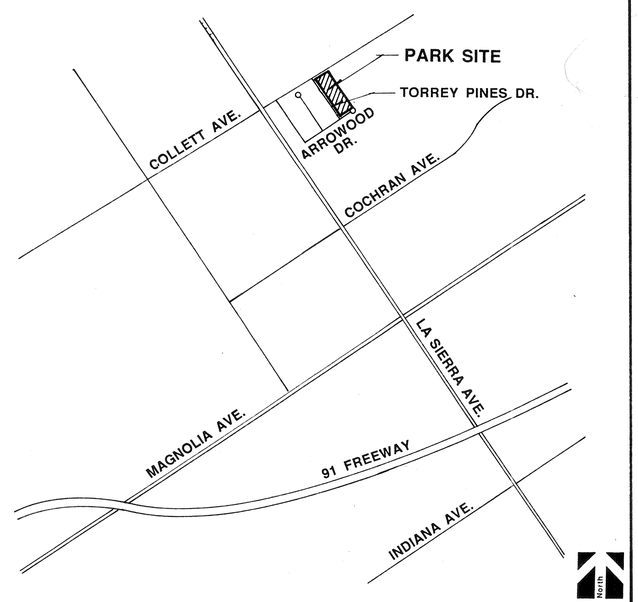

SHEET INDEX

1.	ONE	COVER SHEET
2.	C-1	SITE DEMOLITION PLAN
3.	C-2	SITE GRADING PLAN
4.	C-3	DRAINAGE DETAILS
5.	C-4	SITE CONSTRUCTION PLAN
6.	C-5	PLAN AREA / VOLLEYBALL CONSTRUCTION PLAN
7.	C-6	CONSTRUCTION DETAILS
8.	C-7	CONSTRUCTION DETAILS
9.	C-8	CONSTRUCTION DETAILS
10.	E-1	SITE ELECTRICAL PLAN
11.	E-2	ELECTRICAL DETAILS
12.	L-1	SITE IRRIGATION PLAN
13.	L-2	PLANTER IRRIGATION PLAN
14.	L-3	SITE AND TREE PLANTING PLAN
15.	L-4	PLANTER PLANTING PLAN
16.	L-5	IRRIGATION / PLANTING DETAILS
	ADDITIVE BID ITEMS	
17.	AB-1	ENTRY GAZEBO ITEM II A
18.	AB-2	BASKETBALL COURT - ITEM II B
19.	AB-3	PLAY AREA, PICNIC SHELTER - ITEM II C, PARK PICNIC SHELTER - ITEM II D, HORSESHOE PIT - ITEM II E
20.	AB-4	ENTRY ARBOR / I.D. SIGNS - ITEM II F

APPROVALS

Director, Park and Recreation Department	4/22/94 Date
Park Superintendent	4/22/94 Date
Recreation Superintendent	Date
Park Planning Coordinator	10/22/94 Date

LANDSCAPE ARCHITECTURE AND PLANNING
515 W. COMMONWEALTH, SUITE 205
FULLERTON, CA 92632 (714)773-0973
ASLA
Heimberger

Project;

LICENSED LANDSCAPE ARCHITECT CARL O. HEIMBERGER #1523 STATE OF CALIFORNIA

Date;
Design;
Job No;

Descripti

Sheet 1 o
ONE
PROJECT PLAN

APPROVED
THIS APPROVAL DOES NOT AUTHORIZE VIOLATION OF ANY CITY ORDINANCE OR STATE LAW. IT IS THE RESPONSIBILITY OF THE OWNER TO ENSURE THAT ALL ELECTRICAL, LOCATIONS, HEIGHTS, AND CONSTRUCTION DETAILS ARE SHOWN ON THE PLANS OR HEREON.
Permit: 91-2155
Date: 3/31/94
By: C. Stanick

LICENSED LANDSCAPE ARCHITECT CARL O. HEIMBERGER #1523 STATE OF CALIFORNIA
Sign Date AUG 31 1995
Expiration Date FEB 22 1995

RECEIVED FEB 23 1995 PARK & RECREATION PLANNING & DESIGN

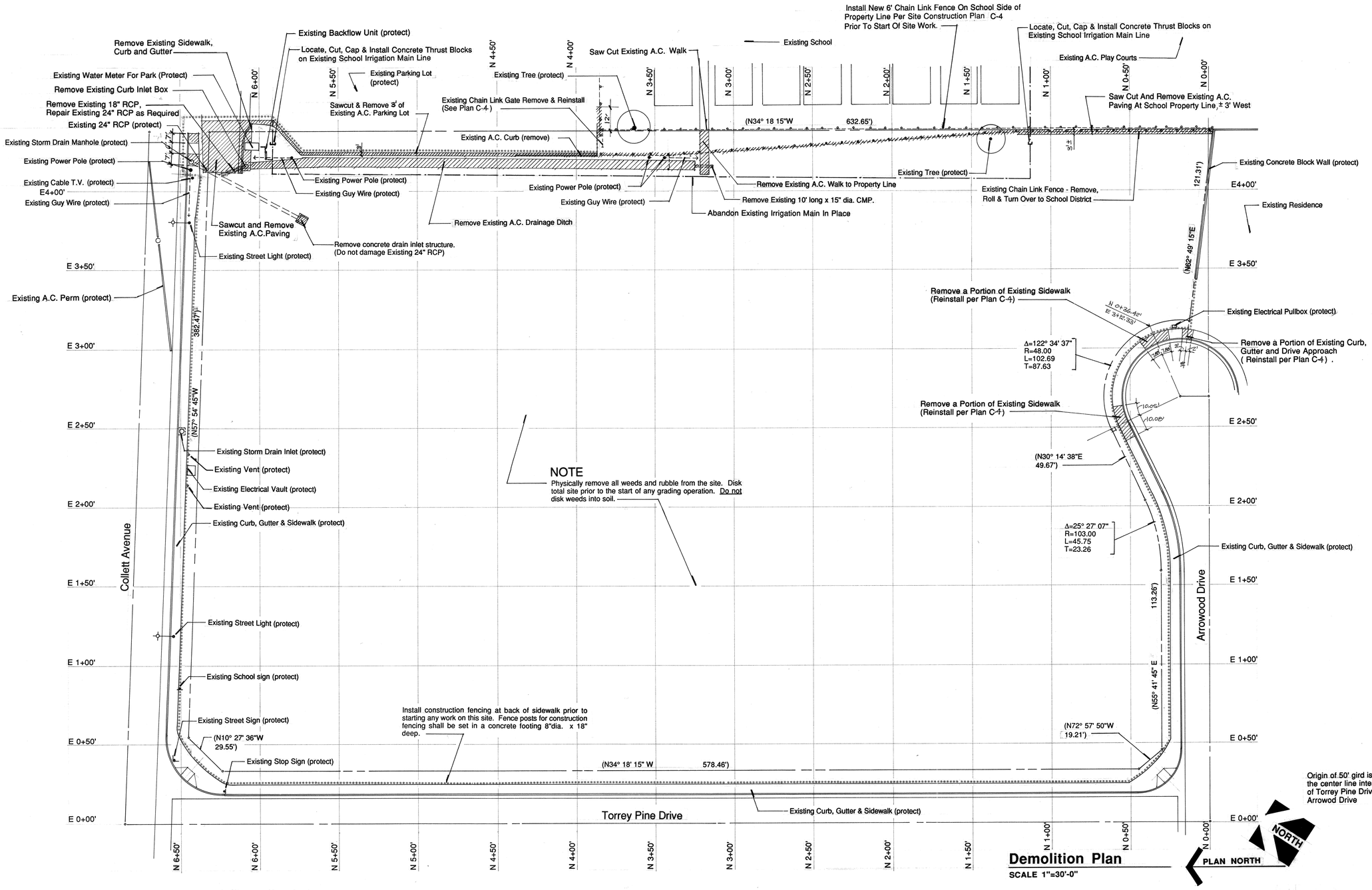

Demolition Plan

SCALE 1"=30'-0"

Demolition Notes:

1. Contractor is responsible for complete removal from site of all material specified on these plans to be removed, unless specified to be stored on site or turned over to another agency. Contractor shall clear site of any remaining debris not in storage prior to beginning new construction.
2. Contractor is responsible for investigating and locating existing utilities prior to any demolition and is responsible for damage to utilities.
3. Contractor shall protect all existing construction during demolition and is responsible for replacement or repair of any damaged material not specified for removal.
4. Contractor shall familiarize himself with the site and shall report any potential problems or discrepancies to the Parks Project Inspector prior to commencing any work.
5. Contractor shall secure the construction site for the entire length of the construction period including the maintenance of the temporary 6' high chainlink fencing and gates as shown.
6. Removal of improvements within street right of way are subject to permits and coordination with the Public Works Department.
7. Contractor is responsible for all erosion control of construction site, during both construction and maintenance periods. Contractor shall submit erosion control and SWPPP plan to City for approval prior to any construction.

Legend

- Construction Fencing
- Existing Fencing to be Removed
- Existing A.C., Concrete to be Removed
- Existing Pipe to be Removed

All items NOT CROSS HATCHED are to remain and be protected in place by the contractor.

- R.O.W. Line
- New 6' Chain Link Fence

Underground Service Alert
Call TOLL FREE
1-800 422-4133
TWO WORKING DAYS BEFORE YOU DIG

LANDSCAPE ARCHITECTURE AND PLANNING
515 W. COMMONWEALTH, SUITE 205
FULLERTON, CA 92632 (714)773-0973
ASLA
Heimberger Hirsch & Associates, Inc.

Project;

COLLETT PARK
10950 Collett Avenue, Riverside, CA

City of Riverside
Department of Park and Recreation
3900 Main Street
Riverside, CA 92522

LICENSED LANDSCAPE ARCHITECT
CARL O. HEIMBERGER
#1523
AUG. 31 1995
Renewal Date
OCT. 31 1994
Date
STATE OF CALIFORNIA

Date; Oct. 31 1994
Design; C. HEIMBERGER
Job No; 93009

Description;

SITE DEMOLITION PLAN

Sheet 2 of 20

DWG C-1

PROJECT PLAN NO. P-0205

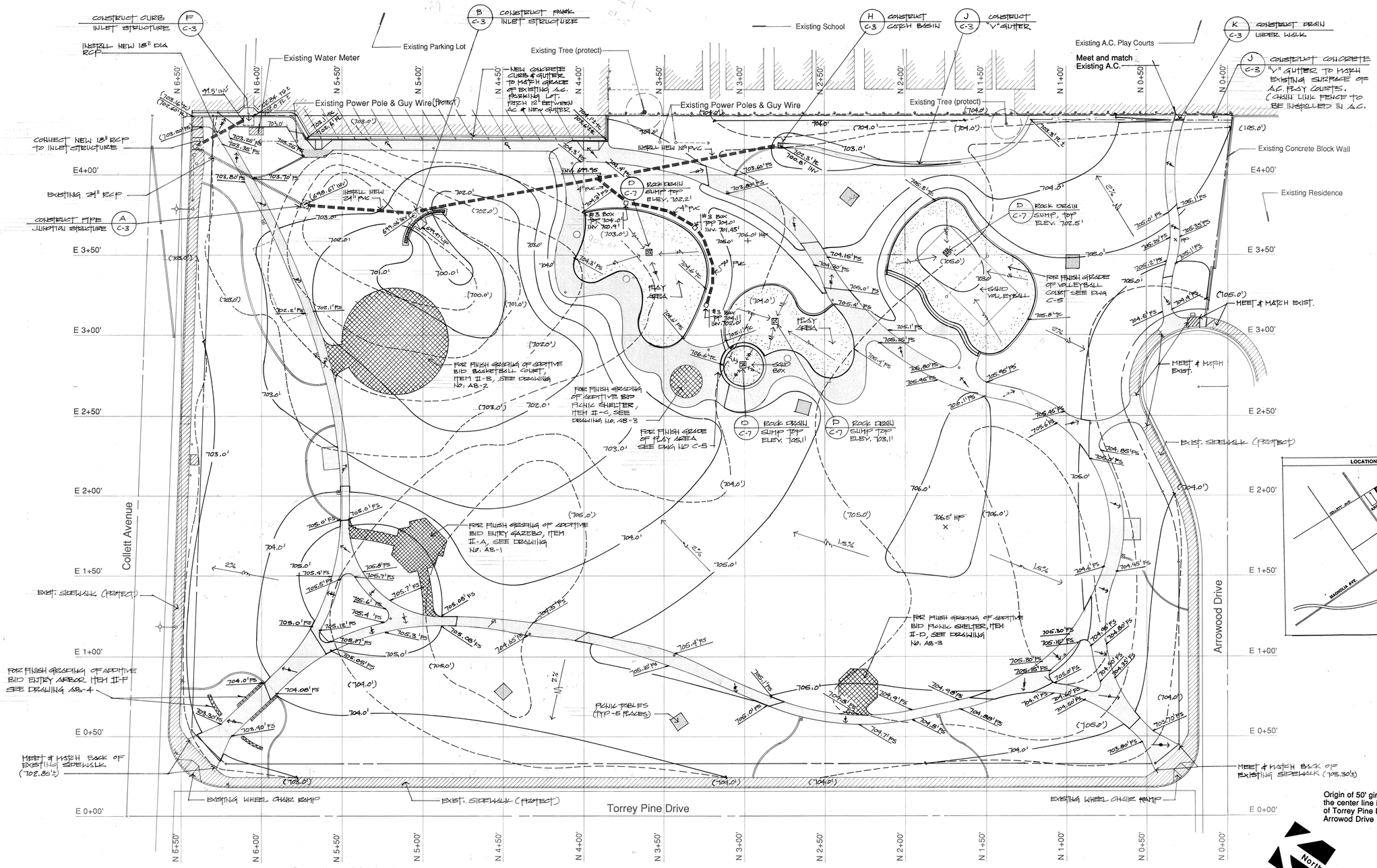

Legend

- Existing Contour
- Proposed Contour
- (705.0') Existing Grades
- 705.0' Proposed Grades
- TC Top of Curb
- TW Top of Wall
- FS Finished Surfaces
- FG Finished Grade
- INV. Invert
- FL Flow Line
- Surface Flow
- Area for Structural Pad (See Note #11)

Grading Notes

1. Contractor shall verify all site conditions, dimensions, locations and depths of all underground utilities, prior to start of work.
2. All work shall comply with the latest Edition of 'Standard Specifications for Public Work Construction'.
3. Contractor shall perform all excavation, compacted backfill and grading work to establish all subgrades and finish grades for all earthwork, concrete flatwork, footings, walls, decks, ramps, curbing, walks and drives as indicated on plan.
4. Contractor shall establish all elevations and dimensions, and provide all survey work necessary for proper execution of plan.
5. Refer to Construction Plan for further information.
6. Excavation and compacted backfill shall balance. There shall be no import or export.
7. Compaction for all landscaped areas shall be 80% relative compaction.
8. Excavate building area to a depth of 2' below existing grade and recompact to 90%. (Building area shall be the pad plus 5' all around)
9. Concrete slab and walk areas proposed to receive fill shall be scarified to a depth of 12" and compact to 90% prior to placement of fill.
10. Concrete slab and walk areas proposed for cuts shall be scarified to a depth of 12", after excavation of cut material, and compacted to 90%.
11. If any excess fill shall be spread on site, as directed by engineer, at no extra cost.
12. Structure area shall be overexcavated to 24" below existing grade. The exposed ground surfaces shall be scarified to a minimum 12", watered or aerated to achieve a moisture content of 1% to 3% above optimum moisture content and compacted to at least 90% of the maximum density.(ASTM D 1557-78 Test Method) Fill building pad to pad elevations in lifts 6" to 8" in thickness and compact each lift to 95" of maximum dry density. (ASTM D 1557-78 Test Method).
13. All grading shall conform to Chapter 70 of the current City-adopted edition of the Uniform Building Code.
14. All provisions of the preliminary soils report prepared by Zeiser Geotechnical Inc., dated April 21, 1993 shall be complied with during grading operations. City Business Tax Certif. No. 041820 Exp. Date 3-27-95.
15. This plan is for grading purposes only. Issuance of a permit based on this plan does not constitute approval of driveway locations or sizes, parking lot structural sections or layout, building locations, off-site drainage facilities or other items not related directly to the basic grading operation.
16. Certification from the registered (civil engineer/architect/landscape architect) stating that the grading has be completed per the approved plan, and a compaction report from the soil engineer for fill areas are required prior to building permits being issued.
17. Contractor is responsible for erosion, dust and temporary drainage control during grading operations.
    a. All manufactured slopes in excess of 5 feet in vertical height are to be protected from erosion during rough grading operations and, thereafter, until installation of final groundcover. (See landscape plans for final groundcover).
    b. All slope protection swales to be constructed a the same time as banks are graded.
    c. The developer and his contractor are responsible for implementation and maintenance of the erosion control measures shown on this plan and SWPPP and also provide any additional erosion control measures (e.g., hydroseeding, mulching of straw, sand bagging, diversion ditches, retention basins, etc.) dictated by field conditions to prevent erosion and/or the introduction of dirt, mud or debris to existing public streets and/or onto adjacent properties during any phase of construction operations. Special attention shall be given to additional erosion control measures noted above during the period of October 15 to April 15.
    d. After a rainstorm, all silt and debris shall be removed from check berms and check dams. Silt and debris shall be removed
18. Any improvements constructed in the public right-of-way will require a separate construction permit and inspection from the Public Works Department.
19. Any walls, fences, structures and/or appurtenances adjacent to the site are to be protected in place. If grading operations damage or adversely affect said items in any way, the contractor and/or developer is responsible for working out an acceptable solution to the satisfaction of the affected property owner(s).
20. The contractor/developer is responsible for ensuring that retaining walls do not interfere with provision of utilities.
21. It is the grading contractor's responsibility to ensure that adequate compaction has been attained on the entire grading site, including fill areas outside the building pads and on all fill slopes.
22. It is the soil engineer's responsibility to observe and perform compaction tests during the grading to evaluate the preparation of the natural ground surface to receive the fill and the compaction attained in the fill, including fill areas outside the building pads and on all fill slopes.
23. Earthwork quantities are shown for grading permit purposes only, and the City of Riverside is not responsible for their accuracy.
24. For grading of areas of 5 acres or more, a Storm Water Pollution Prevention Plan (SWPPP) shall be kept on-site and made available upon request of a representative of the Regional Water Quality Control Board (RWQCB) - Santa Ana Region and/or the City of Riverside.

Grading Plan

SCALE 1"=30'-0"

BENCH MARK :

CITY OF RIVERSIDE BENCH MARK NUMBER F - 2 - J, P.K. NAIL AND CITY ENGINEER TAG IN CATCH BASIN WING IN THE NORTHERLY CURB OF COLLETT AVENUE, 475 ± LINEAL FEET WESTERLY OF NEWBY DRIVE. (VIC. OF RESIDENCE NUMBER 10907 COLLETT AVENUE)

ELEVATION : 702.865

Grading Calculations

Total cut 3600 Cubic Yards
Total Fill 3215 Cubic Yards
Subsidence 385 (12%) Cubic Yards

AREA = 5.9 AC.

PLANNING DEPT. APPROVAL: ESC Review Not Required
Joe A Swick 10/21/94

Construction Legend

- Existing Construction
- New Construction
- Existing Concrete Drain Line
- New Drain Line
- Additive Bid Items

Underground Service Alert
Call TOLL FREE
1-800
422-4133
TWO WORKING DAYS BEFORE YOU DIG

LANDSCAPE ARCHITECTURE AND PLANNING
515 W. COMMONWEALTH, SUITE 205
FULLERTON, CA 92632 (714)773-0973
ASLA
Heimberger Hirsch & Associates Inc.

Project;

COLLETT PARK
10950 Collett Avenue, Riverside, CA

City of Riverside
Department of Park and Recreation
3900 Main Street
Riverside, CA 92522

LICENSED LANDSCAPE ARCHITECT
CARL O. HEIMBERGER
#1523
Signature
AUG. 31 1995
Renewal Date
OCT. 20 1994
Date
STATE OF CALIFORNIA

Date; Oct. 31 1994
Design; HHHBERGER
Job No; 93009

Description;

SITE GRADING PLAN

Sheet 3 of 20

DWG C-2

PROJECT PLAN NO. P-0205

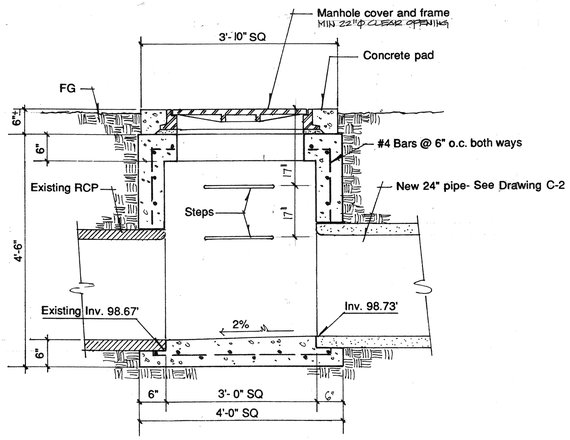

Connection to Existing RCP (A)

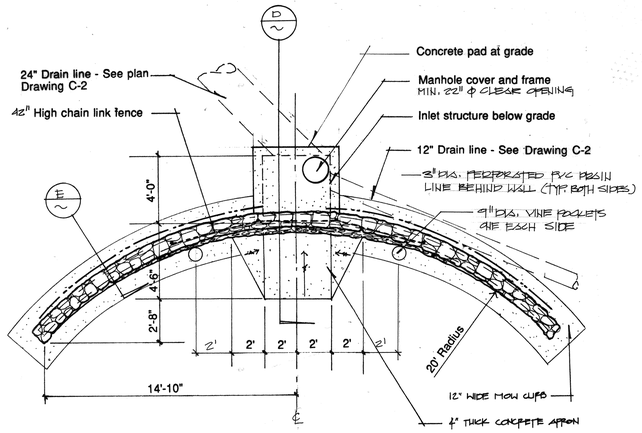

Plan Inlet Structure (B)

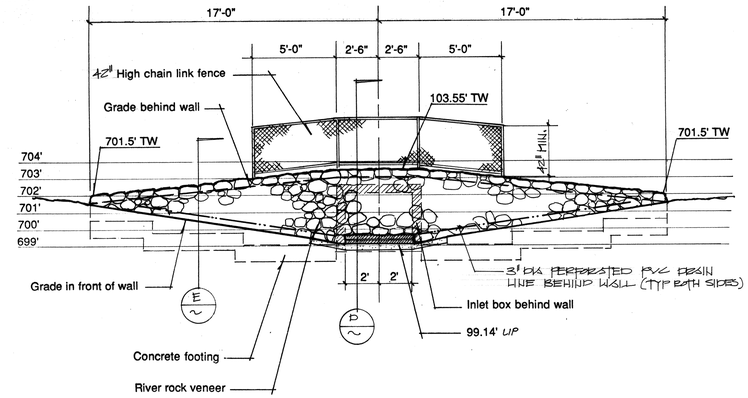

Profile Inlet Structure (C)

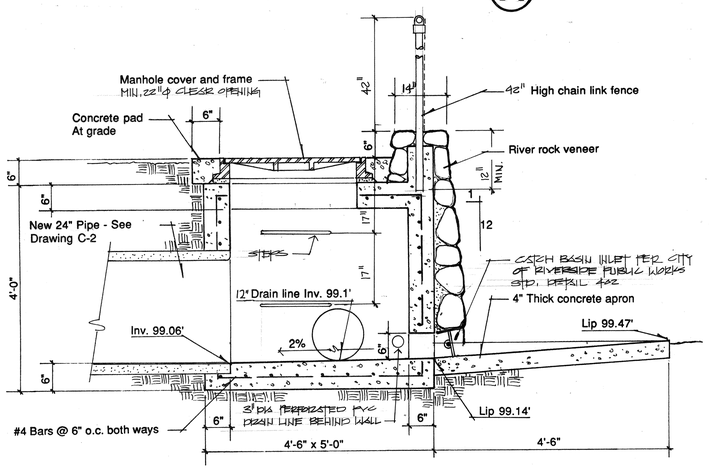

Section @ Inlet Structure (D)

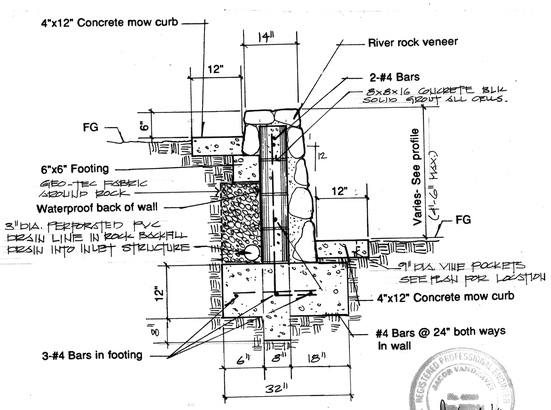

Retaining Wall @ Inlet Structure (E)

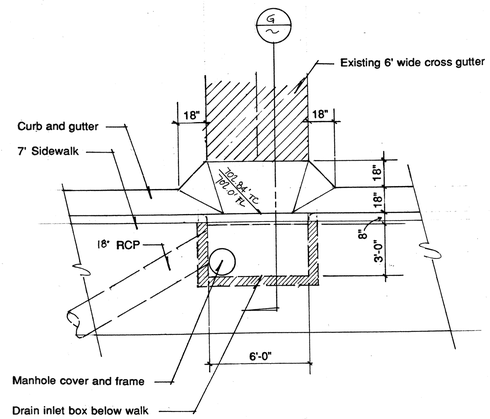

Plan Curb Inlet (F)

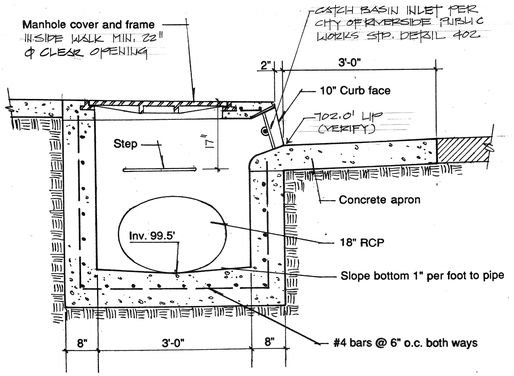

Section Curb Inlet (G)

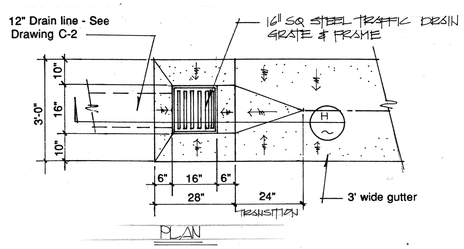

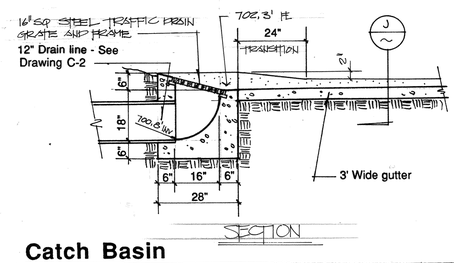

Catch Basin (H)

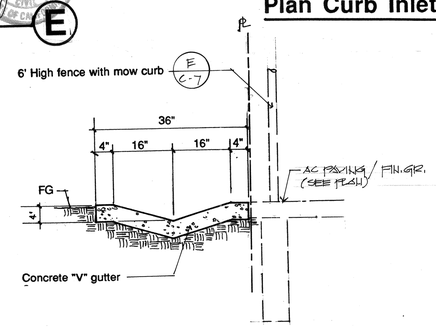

Concrete "V" Gutter (J)

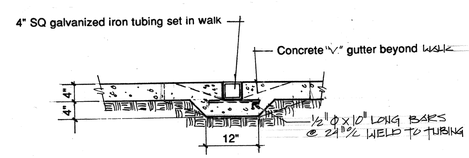

Drain Through Walk (K)

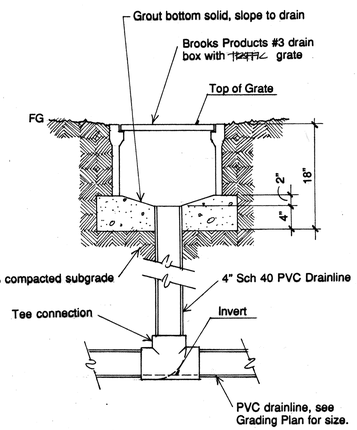

#3 Drain Box (L)

LANDSCAPE ARCHITECTURE AND PLANNING

515 W. COMMONWEALTH, SUITE 205
FULLERTON, CA 92632 (714)773-0973

ASLA

Heimberger Hirsch & Associates Inc.

Project;

COLLETT PARK
10950 Collett Avenue, Riverside, CA

City of Riverside
Department of Park and Recreation
3900 Main Street
Riverside, CA 92522

LICENSED LANDSCAPE ARCHITECT
CARL O. HEIMBERGER
#1523
AUG. 31 1995
OCT. 20 1994
STATE OF CALIFORNIA

Date; Oct. 31 1994
Design; C. HEIMBERGER
Job No; 93009

Description;

DRAINAGE DETAILS

Sheet 4 of 20

DWG C-3

PROJECT PLAN NO. P-0205

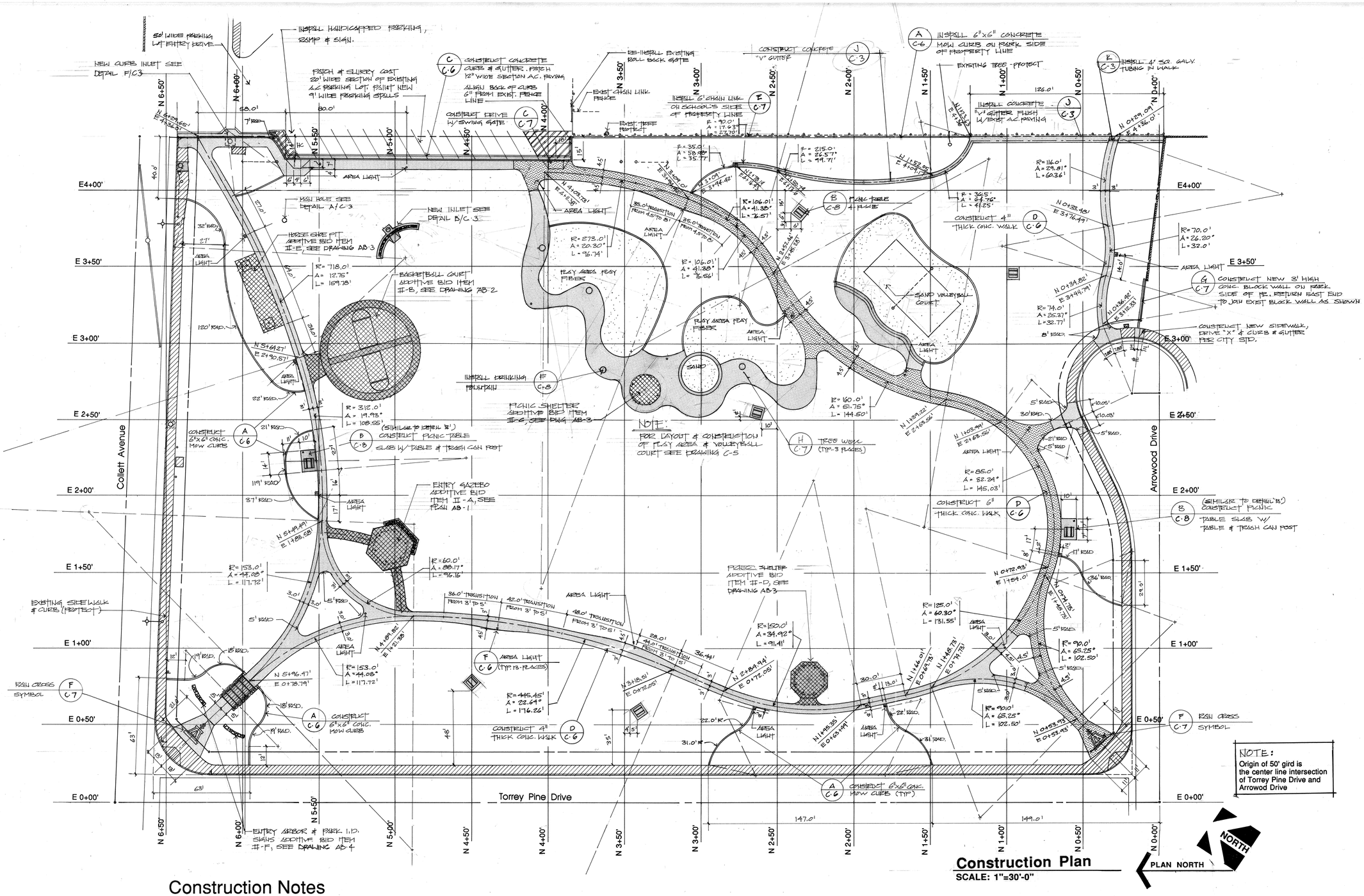

Construction Plan

SCALE: 1"=30'-0"

Construction Notes

1. Contractor shall construct in their entirety all items of work as shown on plans and delineated in specifications.
2. Contractor shall verify all site condition, dimensions, locations, and depths of all underground utilities prior to start of work.
3. All work shall comply with the latest edition of the Uniform Building Codes, Specifications and local ordinances.
4. Contractor shall keep job site free of debris at all times.
5. All concrete shall be 560-C-2500 (560 lbs cement / cu. yd., class C aggregate, 2500 lbs in 28 days) unless specified otherwise.
6. All anchors and reinforcement shall be held in place, tied and or supported prior to placement of concrete.
7. Perform all excavation, compacted backfilling and grading operation to establish all subgrades and finish grades for all items of construction as indicated on plans.
8. Contractor to clear site of all weed and grass growth prior to start of work. Contractor shall maintain site in weed free condition throughout the construction period removing all weed growth from site.
9. Contractor shall provide all survey work necessary for construction. Contractor shall establish all elevations for construction.
10. All layout and forming of construction items must be reviewed and approved by the Park Projects Inspector prior to construction.
11. Radius all exposed edges of concrete flatwork with 1/2" radius finishing tool.
12. All concrete flatwork shall be 4" thick with a medium broom finish except where noted/shown otherwise.
13. All concrete drive approaches and concrete designated for vehicular traffic shall be 6" thick with a medium broom finish unless specified otherwise.
14. Protect all existing on site elements and conditions unless specified otherwise.
15. All new construction shall meet and match existing.
16. All work shall comply with all requirements of the California Organizational Safety and Health Administration.
17. Contractor shall coordinate its work with all other contractors and trades on site. All scheduling problems shall be brought to the immediate attention of the Park Projects Inspector..

Legend

- 6" Thick concrete walk (VEHICULAR TRAFFIC)
- 4" Thick concrete walk
- Existing concrete walk (PROTECT IN PLACE)
- Additive bid items

Underground Service Alert
Call TOLL FREE
1-800 422-4133
TWO WORKING DAYS BEFORE YOU DIG

LANDSCAPE ARCHITECTURE AND PLANNING
515 W. COMMONWEALTH, SUITE 205
FULLERTON, CA 92632 (714)773-0973
ASLA
Heimberger Hirsch & Associates Inc.

Project;

COLLETT PARK
10950 Collett Avenue, Riverside, CA

City of Riverside
Department of Park and Recreation
3900 Main Street
Riverside, CA 92522

LICENSED LANDSCAPE ARCHITECT
CARL D. HEIMBERGER
#1523
AUG. 31 1995
OCT. 31 1994
STATE OF CALIFORNIA

Date; Oct. 31 1994
Design; C. HEIMBERGER
Job No; 93009

Description;
SITE CONSTRUCTION PLAN

Sheet 5 of 20
DWG C-4
PROJECT PLAN NO. P-0205

A - JJ

A) R= 87.0'
A= 14.48°
L= 21.98'
CP= N 9+85.40'/E 3+64.0'

B) R= 80.0'
A= 41.82°
L= 58.39'
CP= N 3+76.84'/E 2+99.0'

C) R= 34.0'
A= 81.82°
L= 48.56'
CP= N 3+57.0'/E 3+40.50'

D) R= 156.0'
A= 12.36°
L= 33.65'
CP= N 4+73.43'/E 3+760.94'

E) R= 19.0'
A= 59.43°
L= 19.71'
CP= N 3+27.66'/E 3+09.85'

F) R= 93.0'
A= 7.40°
L= 12.0'
CP= N 3+48.0'/E 3+81.0'

G) R= 28.0'
A= 117.17°
L= 57.26'
CP= N 2+84.0'/E 3+02.50'

H) R= 15.0'
A= 68.52°
L= 17.94'
CP= N 2+83.30'/E 3+15.48'

I) R= 12.0'
A= 70.84°
L= 22.86'
CP= N 2+57.68'/E 3+24.0'

J) R= 35.0'
A= 48.17°
L= 29.44'
CP= N 2+66.54'/E 2+90.0'

K) R= 14.0'
A= 122.50°
L= 29.93'
CP= N 2+45.74'/E 2+87.10'

L) L= 14.27'

M) R= 17.12'
A= 83.70°
L= 25.14'
CP= N 2+76.0'/E 2+72.0'

N) R= 5.0'
A= 132.62°
L= 11.57'
CP= N 2+19.66'/E 2+90.58'

O) R= 139.0'
A= 8.34°
L= 20.22'
CP= N 3+63.47'/E 2+83.0'

P) R= 15.0'
A= 126.91°
L= 33.23'
CP= N 2+40.0'/E 2+71.50'

Q) R= 46.0'
A= 25.89°
L= 20.79'
CP= N 2+81.0'/E 2+26.34'

R) R= 14.0'
A= 81.46°
L= 19.91'
CP= N 2+72.0'/E 2+57.0'

S) R= 18.0'
A= 109.86°
L= 34.52'
CP= N 3+01.03'/E 2+70.50'

T) R= 10.0'
A= 85.23°
L= 14.88'
CP= N 3+20.74'/E 2+50.61'

U) R= 15.5'
A= 134.73°
L= 36.45'
CP= N 3+37.30'/E 2+70.0'

V) R= 5.0'
A= 92.45°
L= 8.07'
CP= N 3+57.74'/E 2+71.51'

W) R= 19.0'
A= 91.47°
L= 30.33'
CP= N 3+57.0'/E 2+95.50'

X) R= 80.0'
A= 13.76°
L= 19.95'
CP= N 4+55.84'/E 3+01.11'

Y) R= 11.0'
A= 82.12°
L= 15.77'
CP= N 3+88.0'/E 3+13.70'

Z) R= 87.0'
A= 7.74°
L= 12.26'
CP= N 3+84.50'/E 2+37.78'

AA) R= 39.0'
A= 11.47°
L= 7.81'
CP= N 4+07.20'/E 3+61.72'

BB) R= 8.0'
A= 77.67°
L= 10.85'
CP= N 4+07.79'/E 3+30.73'

CC) R= 71.0'
A= 29.71°
L= 36.81'
CP= N 4+45.0'/E 3+71.0'

DD) R= 60.0'
A= 45.14°
L= 47.28'
CP= N 4+70.25'/E 3+84.52'

EE) R= 46.0'
A= 38.92°
L= 31.25'
CP= N 2+15.0'/E 3+71.0'

FF) R= 11.0'
A= 148.58°
L= 28.53'
CP= N 3+95.18'/E 3+43.30'

GG) L= 10.48'

HH) R= 10.0'
A= 89.35°
L= 15.82'
CP= N 3+75.72'/E 3+30.19'

II) R= 28.0'
A= 48.56°
L= 23.73'
CP= N 3+91.48'/E 3+21.50'

JJ) R= 15.0'
A= 169.97°
L= 44.50'
CP= N 3+51.0'/E 3+07.0'

1 - 18

1) R= 53.44'
A= 58.62°
L= 55.38'
CP= N 1+57.32'/E 3+35.23'

2) R= 14.0'
A= 88.81°
L= 22.40'
CP= N 1+75.0'/E 3+70.5'

3) R= 63.0'
A= 36.83°
L= 40.5'
CP= N 1+06.90'/E 4+06.43'

4) R= 26.0'
A= 82.72°
L= 37.54'
CP= N 1+45.0'/E 3+26.0'

5) R= 63.0'
A= 28.70°
L= 31.56'
CP= N 1+80.18'/E 3+37.48'

6) R= 15.0'
A= 104.98°
L= 27.48'
CP= N 1+47.3'/E 3+02.5'

7) L= 5.38'

8) R= 9.0'
A= 46.31°
L= 7.28'
CP= N 1+72.0'/E 2+97.77'

9) R= 26.0'
A= 56.68°
L= 25.72'
CP= N 1+62.68'/E 3+31.50'

10) R= 15.50'
A= 36.14°
L= 9.78'
CP= N 2+02.18'/E 3+18.76'

11) R= 53.5'
A= 21.97°
L= 20.52'
CP= N 2+24.66'/E 2+90.31'

12) R= 21.0'
A= 64.73°
L= 23.90'
CP= N 1+90.65'/E 3+38.0'

13) R= 20.0'
A= 41.35°
L= 14.64'
CP= N 2+11.16'/E 3+02.50'

14) R= 16.0'
A= 56.69°
L= 15.83'
CP= N 1+77.04'/E 3+14.0'

15) L= 5.84'

16) R= 14.0'
A= 57.35°
L= 14.01'
CP= N 1+79.0'/E 2+83.50'

17) R= 7.0'
A= 132.11°
L= 16.14'
CP= N 1+72.35'/E 2+85.66'

18) R= 10.0'
A= 132.11°
L= 16.14'
CP= N 1+46.0'/E 2+79.79'

14) L= 5.44'

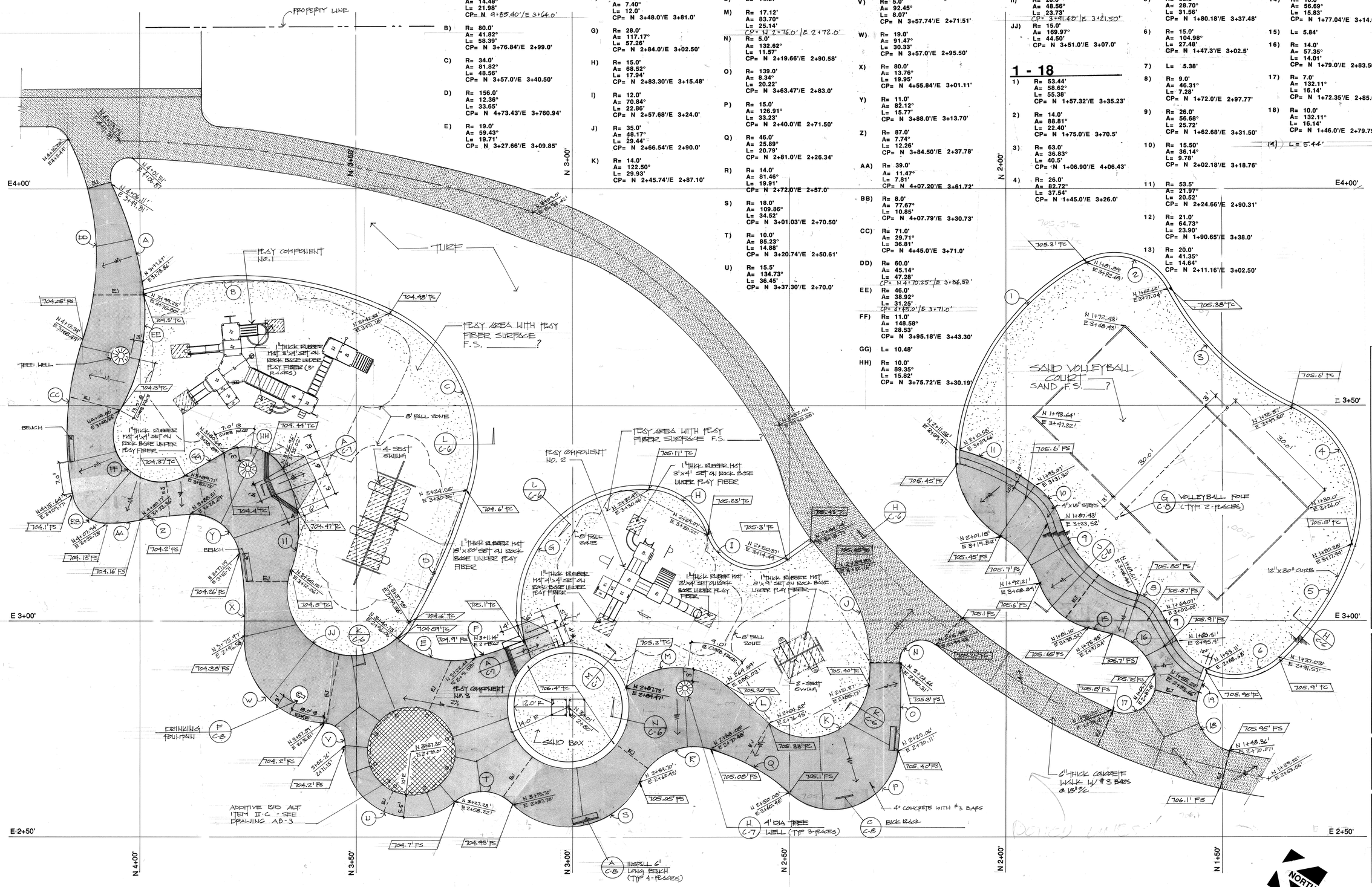

*MIN. 4' CLR.

Play Area and Volleyball Construction Plan

SCALE 1" = 10'-0"

PLAN NORTH

NORTH

LANDSCAPE ARCHITECTURE AND PLANNING

515 W. COMMONWEALTH, SUITE 205
FULLERTON, CA 92632 (714)773-0973

ASLA

Heimberger Hirsch & Associates Inc.

Project;

COLLETT PARK
10950 Collett Avenue, Riverside, CA

City of Riverside
Department of Park and Recreation
3900 Main Street
Riverside, CA 92522

LICENSED LANDSCAPE ARCHITECT
CARL D. HEIMBERGER
#1523
AUG. 27 1995
Renewal Date
OCT. 31 1994
Date
STATE OF CALIFORNIA

Date; Oct. 31 1994
Design; C. HEIMBERGER
Job No; 93009

Description;

PLAY AREA & VOLLEYBALL CONSTRUCTION PLAN

Sheet 6 of 20

DWG C-5

PROJECT PLAN NO. P-0205

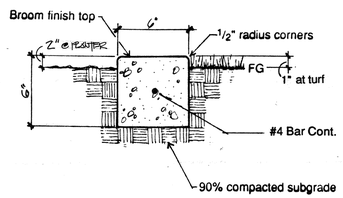

Mow Curb — NTS — A

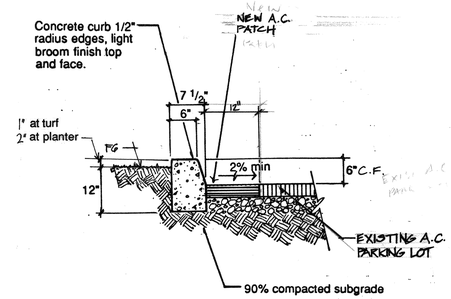

Curb — B

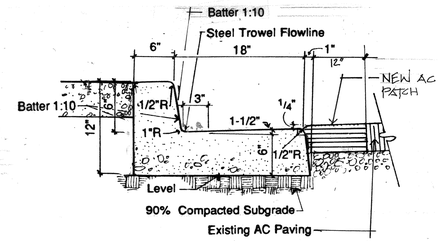

Curb and Gutter — C

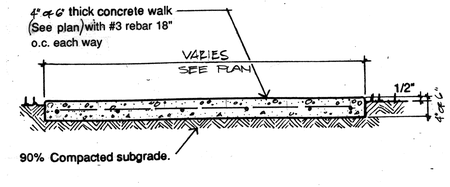

Walk — D

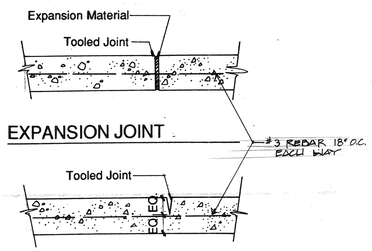

Expansion Joint Detail — E

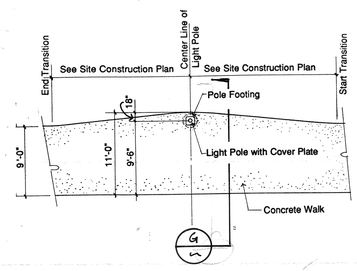

Light Pole in Concrete Walk — F
Scale: 1/8" = 1'-0"

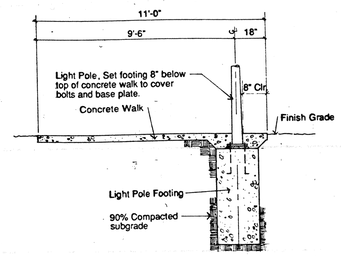

Light Pole in Concrete Walk — NTS — G

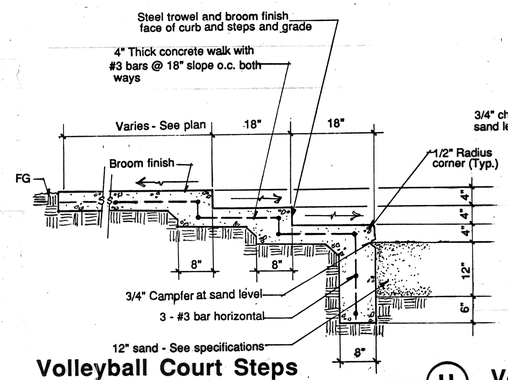

Volleyball Court Steps — H
Scale 3/4" = 1' 0"

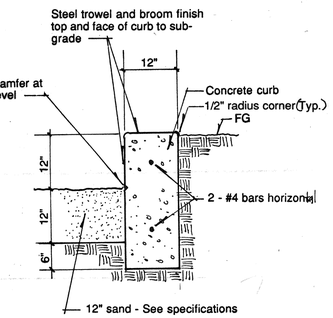

Volleyball Curb — J

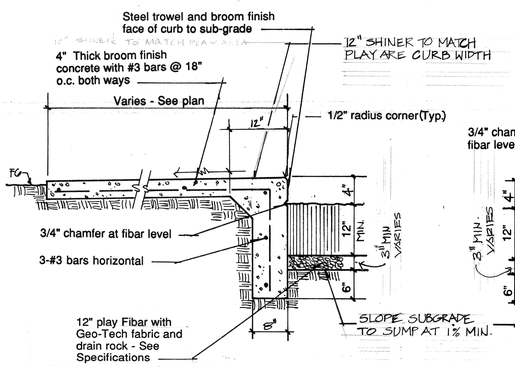

Play Area with Sidewalk — K

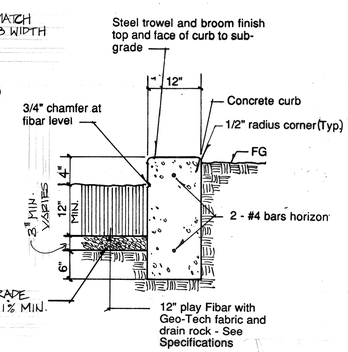

Play Area Curb — L

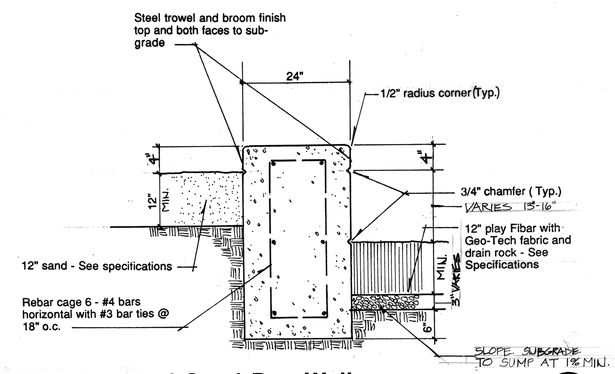

Play Area and Sand Box Wall — M

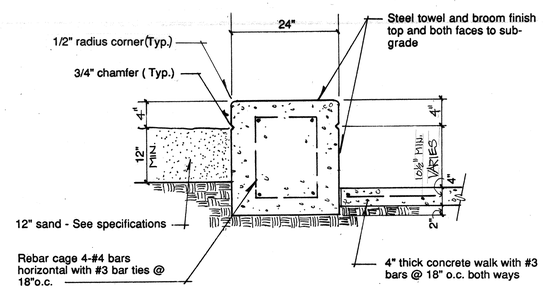

Sand Box Wall — N

LANDSCAPE ARCHITECTURE AND PLANNING

515 W. COMMONWEALTH, SUITE 205
FULLERTON, CA 92632 (714)773-0973

ASLA

Heimberger Hirsch & Associates, Inc.

Project;

COLLETT PARK
10950 Collett Avenue, Riverside, CA

City of Riverside
Department of Park and Recreation
3900 Main Street
Riverside, CA 92522

LICENSED LANDSCAPE ARCHITECT
CARL O. HEIMBERGER
#1523
AUG. 31 1955
OCT. 31 1994
STATE OF CALIFORNIA

Date; Oct. 31 1994
Design; C. HEIMBERGER
Job No; 93009

Description;

CONSTRUCTION DETAILS

Sheet 7 of 20

DWG C-6

PROJECT PLAN NO. P-0205

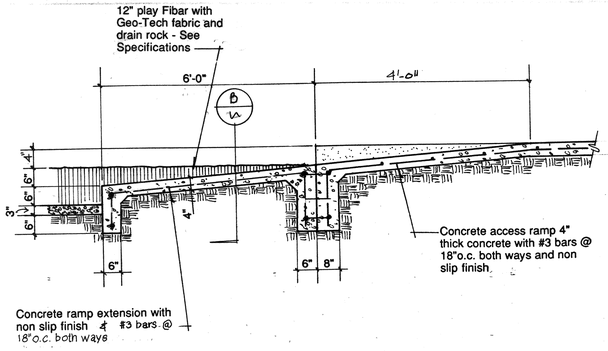

Play Area Ramp Section (A)

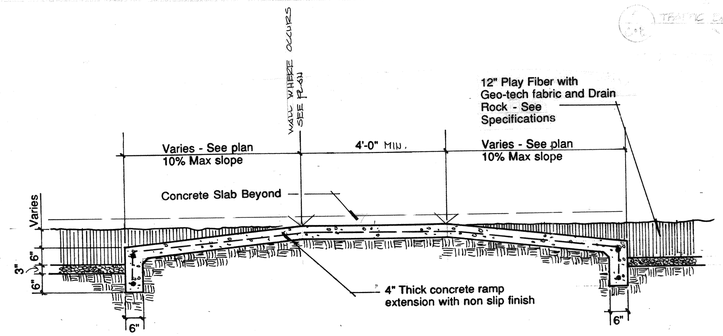

Concrete Ramp at Play Area (B)

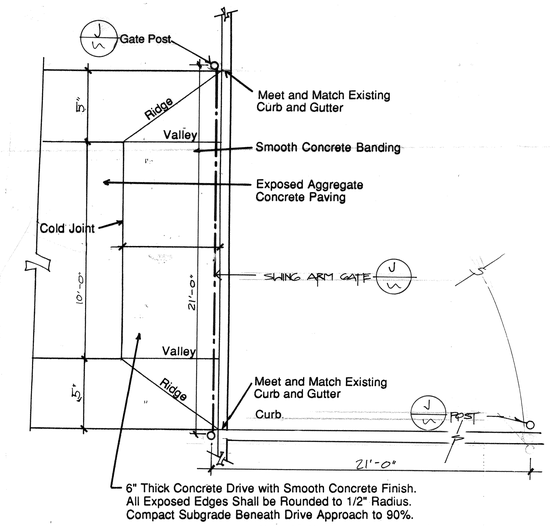

Drive Approach (C)

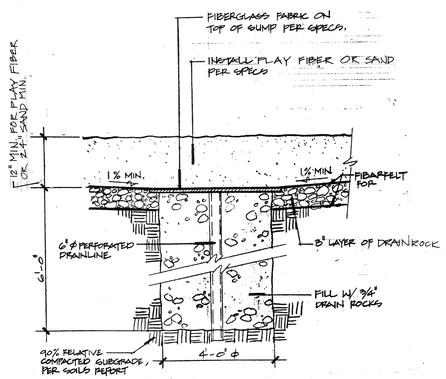

Sump Detail (D)

Scale: 1"= 1'-0"

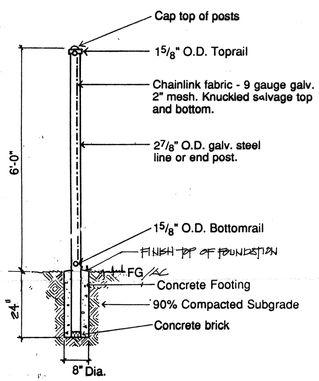

6' Chain Link Fence w/ Mow Curb (E)

NTS

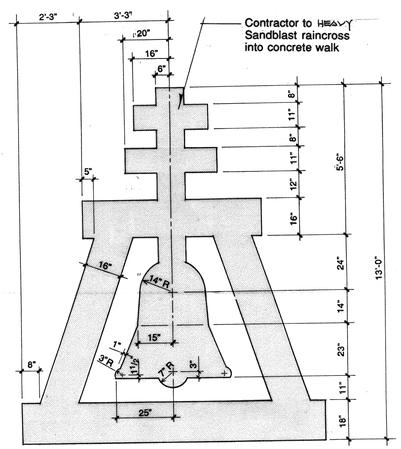

Contractor to provide stencil for sandblasting emblem into concrete

Raincross Emblem Stencil (F)

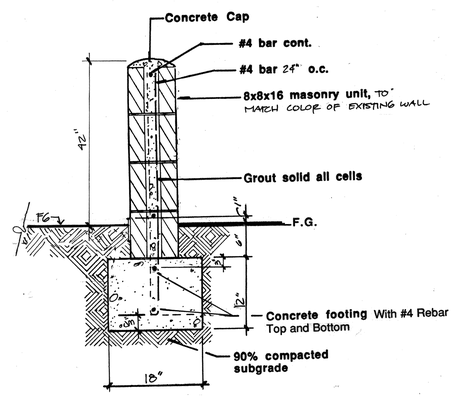

P.L. Block Wall (G)

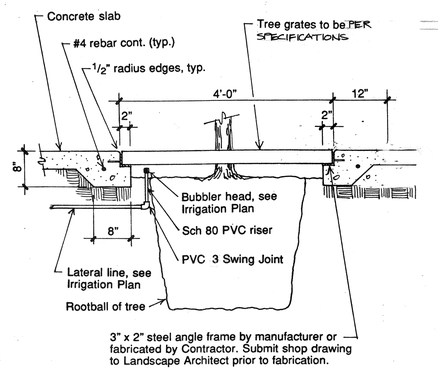

Tree Well (H)

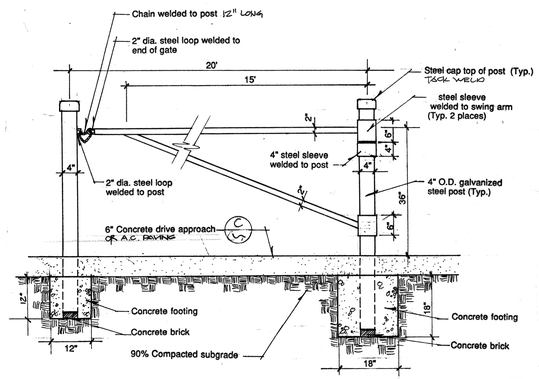

Swing Arm Gate (J)

LANDSCAPE ARCHITECTURE AND PLANNING

515 W. COMMONWEALTH, SUITE 205
FULLERTON, CA 92632 (714)773-0973

ASLA

Heimberger Hirsch & Associates Inc.

Project;

COLLETT PARK
10950 Collett Avenue, Riverside, CA

City of Riverside
Department of Park and Recreation
3900 Main Street
Riverside, CA 92522

LICENSED LANDSCAPE ARCHITECT
CARL O. HEIMBERGER
#1523
AUG. 31 1995
Renewal Date
OCT. 31 1994
Date
STATE OF CALIFORNIA

Date; Oct. 31 1994
Design; C. HEIMBERGER
Job No; 93009

Description;

CONSTRUCTION DETAILS

Sheet 8 of 20

DWG C-7

PROJECT PLAN NO. P-0205

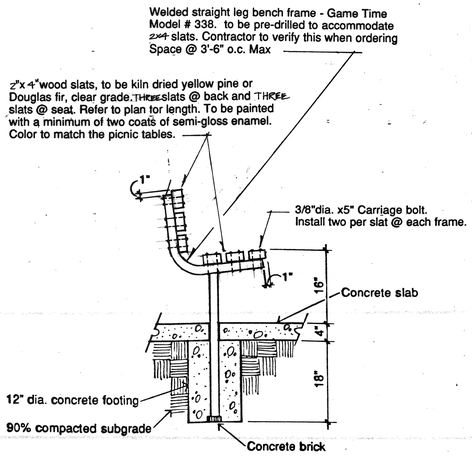

Bench

Scale: 3/4"= 1'-0"

A

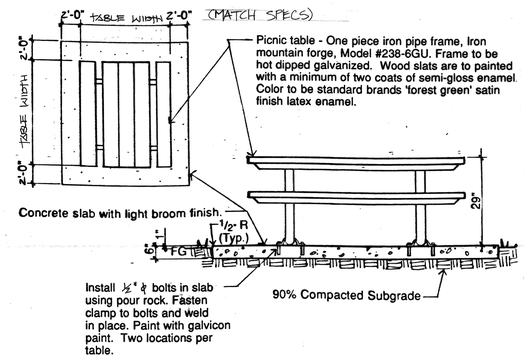

Picnic Table

Iron Mountain Forge is Available from: Pacific Design Concepts (800) 367-7325

B

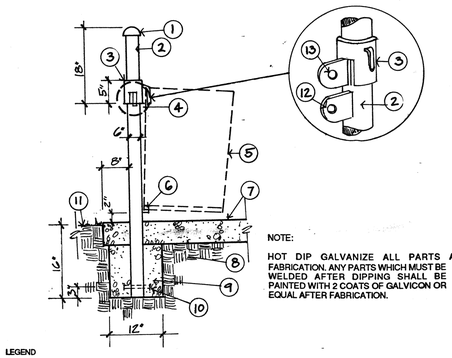

NOTE:

HOT DIP GALVANIZE ALL PARTS AFTER FABRICATION. ANY PARTS WHICH MUST BE WELDED AFTER DIPPING SHALL BE PAINTED WITH 2 COATS OF GALVICON OR EQUAL AFTER FABRICATION.

LEGEND

1. GALVANIZED METAL CAP WELDED TO TOP OF POST.
2. 2-1/2" IDA. X 5" LONG SCH. 40 GALV. STEEL POST.
3. 3" DIA. X 5" LONG SCH. 40 GALV STEEL COLLAR W/ 1/2" DIA. X 5" LONG SHAPED GALV. STEEL BAR STOCK HOOK WLEDED TO TOP OF COLLAR. PROVIDE 1" GAP BETWEEN HOOK & COLLAR. COLLAR TO SLIDE FREELY ON POST.
4. 1/2" SQ. X 2" LONG BAT STOCK WELDED VETICALLY TO POST 18" FROM TOP TO ACT AS STOP FOR SLIDING COLLAR.
5. THRASH CONTAINER PER SPECS.
6. 1-1/2" X 1 1/2" X 1-1/2" LENGTH ANGLE FROM WELDED HORIZONTALLY TO POST 18" FROM BOTTOM. SUPPORT ANGLE IRON W / 1" X 2" X 1/4" THICK STEEL WELDED VERTICALLY TO THE PIPE.
7. POST SHALL BE SET PLUMB IN CONC. SLAB OR SIDEWALK PER PLAN.
8. COMPACTED SUBGRADE.
9. MIN. 12" DIA. X 12" DEEP CONC. FOOTING.
10. STABILIZING CROSSBAR: MIN. 1/2" X 6" LENGTH REBAR TO BE FILLET WELDED TO POST. DRILL POST TO ACCEPT CROSSBAR.
11. FINISH GRADE.
12. POST LOCK EXTENSION: 1/4" THK. 2" WIDTH, LENGTH AS AREQUIRED, BAR STOCK. RADIUS END & PUNCH 1/2" HOLE IN CENTER TO ALLOW FOR PAD LOCK. WELD VERTICALLY TO POST TO ALIGN W/COLLAR OPENING WHEN COLLAR IS IN DOWN POSITION . PUNCH HOLE SHALL ALIGN W/COLLAR LOCK EXTENSION HOLE TO ALLOW LOCKING IN DOWN POSITION.
13. COLLAR LOCK EXTENSION: 1/4" THICK X 2" WIDTH X 2" LONG BAR STOCK. RADIUS END & PUNCH 1/2" HOLE IN CENTER TO ALIGN W/POST LOCK EXTENSION WHEN IN DOWN POSITION. WELD VERTICALLY TO COLLAR. CUT OUT SECTION OF COLLAR TO ALLOW COLLAR TO SLIDE DOWN OVER POST LOCK EXTENSION.

Trash Receptacle

D

Legend

1. Fabricated drinking fountain from WG "H" column - 15 lbs/ft 6" depth x 6" width - hot dip galvanize after fabrication.
2. Tree grate per specification.
3. Concrete paving - see plan.
4. Concrete footing.
5. Thicker edge of concrete walk as required and provide 4" thick bottom, slope to catch basin.
6. Square gate valve box inscribed "water" per specifications.
7. Angle gate valve with hand wheel per specifications.
8. 1/2" type "K" copper pipe.
9. 1/2" galvanized iron pipe.
10. 1/2" galvanized iron pipe unions.
11. Bubbler - has model #5708 polished chrome, drill wed ±27/32" to receive bubbler. Provide plumbers putty or gasket seal under bubbler - (Haws (213) 724-1120).
12. Miter cut and weld full penetration butt weld - typ all welds.
13. Concrete filler block pour after tree grate is set.
14. Opening for water flow.
15. No. 3 rebar.
16. Catch basin per specifications.
17. 3" diameter sch 40 PVC drain pipe, slope 2% min to sump.
18. 4" diameter non-metallic perforated drain pipe.
19. 3/4" diameter drain rock sump, 1 - cubic yard.
20. Trevira spun bound fabric.
21. Control push button and flow control shall be Murdock self-closing push button with vandal guard. Button body 1 1/4" diameter hole, guard 2 - No. 25 pilot holes and 10/24 tap in flange. (Pierce and Assoc. 800-750-4442)
22. 1/2" inline filter with shut off and 150 mesh element with flash capability, Agrifim model 1850. Provide all necessary adapters and fittings for complete installation. (800-688-8108)
23. Weld 1/4" x 1 1/2" width pipe support inside flange.
24. Fabricate 1/4" thick steel plate and weld to "H".

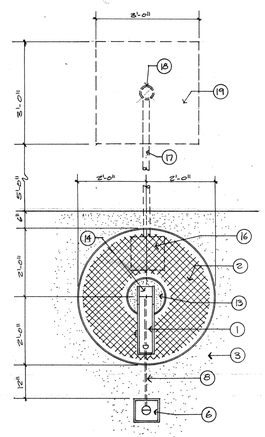

DRINKING FOUNTAIN PLAN

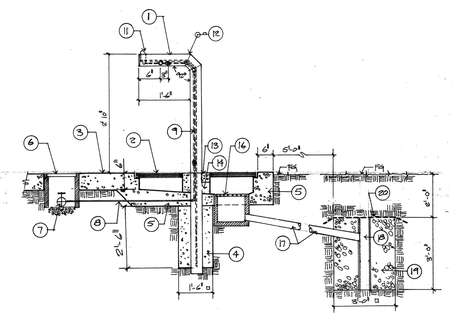

DRINKING FOUNTAIN SECTION

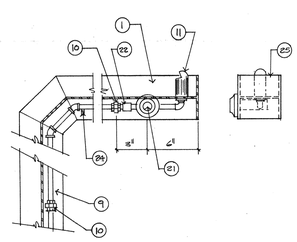

VALVE DETAIL

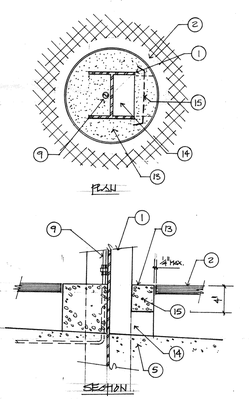

FILLER BLOCK DETAIL

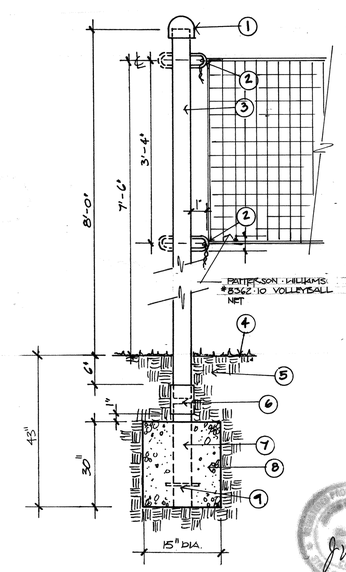

LEGEND

1. THREADED GALV. STEEL CAP. THREAD ON TO POST & TACK WELD IN PLACE.
2. 1/4' ROUND BAR STOCK LOOPS FILLET WELDED TO POST BOTH ENDS. PROVIDE 2 EACH SIDE (TOTAL 4) FOR CENTER POST & 2, ONE SIDE ONLY FOR END POST. WELD IN POSITION SO THAT WHEN POST IS THREADED TIGHT INTO ANCHOR, LOOPS ARE PERPENDICULAR TO LENGTH OF VOLLEYBALL COURT & PARALLEL TO WIDTH OF COURT. END POST LOOPS SHALL FACE ONTO COURT.
3. 2-3/8" DIA. SCH. 40 GALV. STEEL POST THREADED BOTH ENDS. LENGTH AS REQUIRED.
4. FINISH GRADE.
5. COMPACTED SUBGRADE.
6. SCH. 40 GALV. STEEL THREADED ANCHOR COUPLING TO ACCEPT 2-3/-8"DIA. PIPE.
7. 2-3/8" DIA. SCH. 40 GALV. STEEL ANCHOR POST. THREADED @ TOP END.
8. CONCRETE FOOTING 12" DIA.
9. STABILIZING CROSS BAR: MIN. 1/2' X6" LENGTH REBAR TO BE FILLET WELDED TO ANCHOR POST. DRILL ANCHOR POST TO ACCEPT CROSSBAR.

NOTES:

A. CONCTRACTOR SHALL PROVIDE & INSTALL 3 ANCHORS W/FOOTINGS AS LOCATED ON PLANS.

B. CONTRACTOR SHALL PROVIDE AND INSTALL 1 CENTER POST AND 1 END POST.

C. CONTRACTOR SHALL PROVIDE ONE 2-3/8" DIA. 3" LENGTH GALV. STEEL THREADED NIPPLE W/GALV. STEEL CAP. INSTALL IN NON USED ANCHOR COUPLING.

D. HOT DIP GALVANIZE ALL STEEL PARTS UPON COMPLETION OF FABRICATION.

Volleyball Center & End Post

F

DRINKING FOUNTAIN

NTS

E

LANDSCAPE ARCHITECTURE AND PLANNING

515 W. COMMONWEALTH, SUITE 205
FULLERTON, CA 92632 (714)773-0973

ASLA

Heimberger Hirsch & Associates Inc.

Project;

COLLETT PARK
10950 Collett Avenue, Riverside, CA

City of Riverside
Department of Park and Recreation
3900 Main Street
Riverside, CA 92522

LICENSED LANDSCAPE ARCHITECT
CARL O. HEIMBERGER
AUG. 31 1995
Renewal Date
OCT. 31 1994
Date
STATE OF CALIFORNIA

Date; Oct. 31 1994
Design; C. HEIMBERGER
Job No; 93009

Description;

CONSTRUCTION DETAILS

Sheet 9 of 20

DWG C-8

PROJECT PLAN NO. P-0205

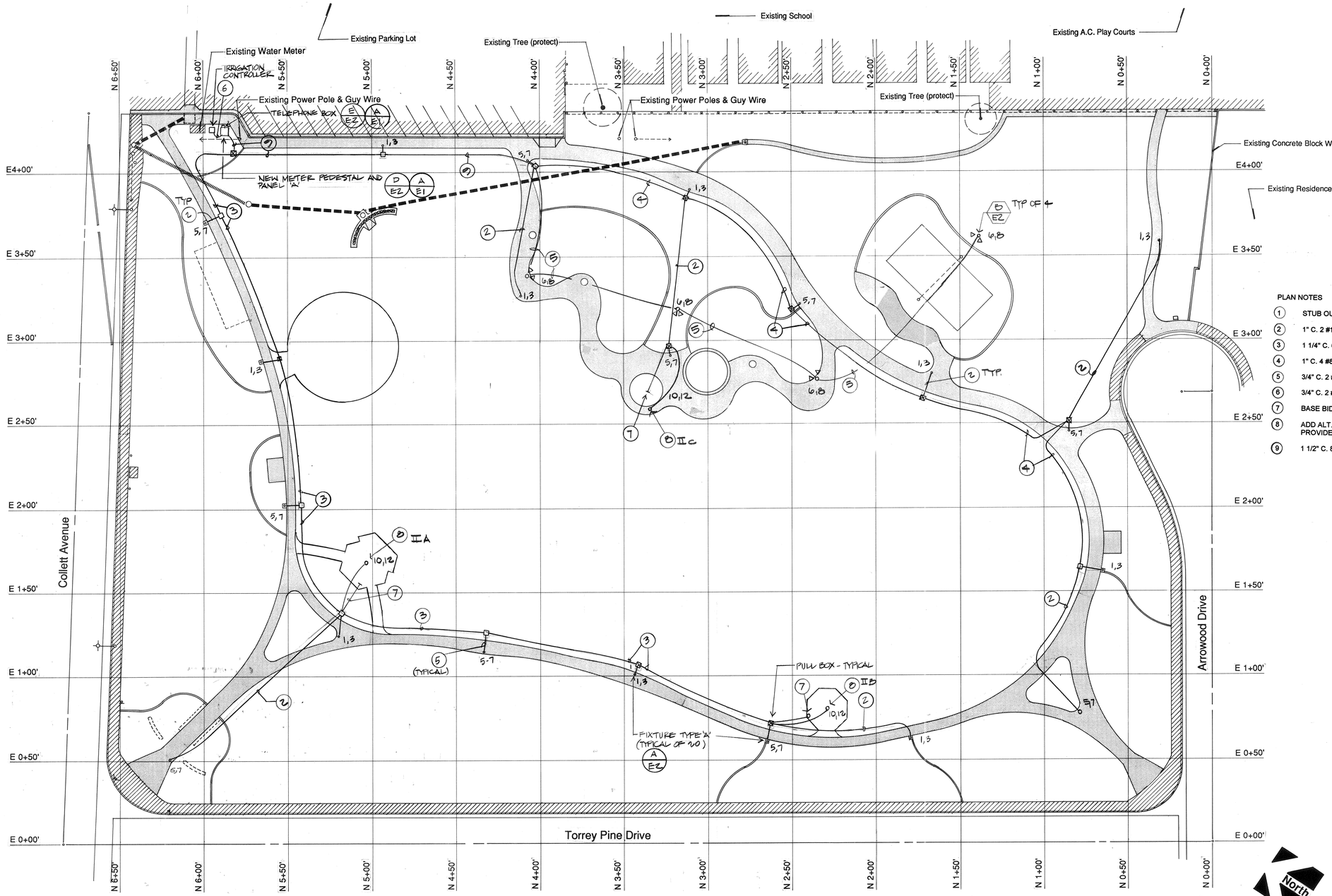

PLAN NOTES

1. STUB OUT, CAP, MARK.
2. 1" C. 2 #10 + 1 #10G.
3. 1 1/4" C. 6 #8 + 1 #10G.
4. 1" C. 4 #8 + 1 #8G.
5. 3/4" C. 2 #8 + 1 #10G.
6. 3/4" C. 2 #12 + 1 + 12G.
7. BASE BID STUB OUT. CAP 3/4" C.O. (MARK/CAP).
8. ADD ALT. BID PROVIDE 3/4" C. 2 #10 TO LIGHT FIXTURE. PROVIDE FIXTURE PER DETAIL "F", SHT. AB-1.
9. 1 1/2" C. 8 #8 + 1 #10G.

Electrical Plan

SCALE 1"=30'-0"

PLAN NORTH

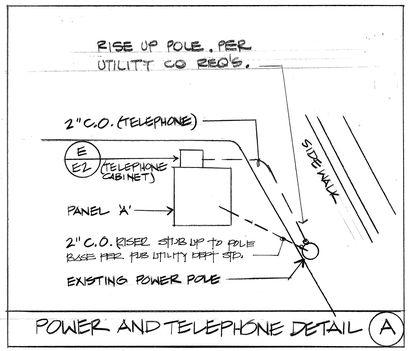

POWER AND TELEPHONE DETAIL (A)

POWER AND TELEPHONE UTILITY GENERAL NOTES

A. UTILITY POINTS OF SERVICE AND WORK / MATERIAL SHOWN ARE BASED ON PRELIMINARY INFORMATION ONLY BY THE UTILITY COMPANIES AND ARE FOR BID PURPOSES ONLY.

B. CONTRACTOR SHALL COORDINATE WITH UTILITY COMPANY FOR FINAL AND EXACT WORK / MATERIAL REQUIREMENTS AND CONSTRUCT TO UTILITY COMPANY ENGINEERING PLANS AND SPECIFICATIONS ONLY. CONTRACTOR SHALL FURNISH AND INSTALL ALL CONDUIT, PULL WIRES, CABLES, PULLBOXES, CONCRETE ENCASEMENT OF CONDUIT (IF REQUIRED), TRANSFORMER PAD, BARRIERS, POLE RISERS, TRENCHING, BACKFILL, PAY ALL UTILITY COMPANY FEES AND INCLUDE ALL REQUIREMENTS IN SCOPE OF WORK.

C. LOCATIONS OF UTILITIES SHOWN ARE APPROXIMATE AND CONTRACTOR SHALL EXERCISE EXTREME CAUTION IN EXCAVATING AND TRENCHING ON THIS SITE TO AVOID EXISTING DUCTS, PIPING OR CONDUITS, ETC., AND TO PREVENT HAZARD TO PERSONNEL AND/OR DAMAGE TO EXISTING UNDERGROUND UTILITIES OR STRUCTURES WHETHER OR NOT SHOWN AND INSTALLED BY ANY OTHER CONTRACTS. THE ENGINEER IS NOT RESPONSIBLE FOR THE LOCATION UNDERGROUND UTILITIES OR STRUCTURES WHETHER OR NOT SHOWN OR DETAILED AND INSTALLED BY ANY OTHER CONTRACTS. THE CONTRACTOR SHALL IMMEDIATELY NOTIFY THE ENGINEER SHOULD SUCH UNIDENTIFIED CONDITIONS BE DISCOVERED. THESE DRAWINGS AND SPECIFICATIONS DO NOT INCLUDE THE NECESSARY ELEMENTS FOR CONSTRUCTION SAFETY.

D. CALL "UNDERGROUND ALERT" BEFORE YOU DIG:
NORTHERN CALIFORNIA: 1-800-642-2444
SOUTHERN CALIFORNIA: 1-800-422-4133

E. UTILITY CO. CONTACTS:

POWER:
CITY OF RIVERSIDE
PUBLIC UTILITIES
3900 MAIN STREET, FOURTH FLOOR
RIVERSIDE, CA 92522
CHARLIE BLUEMEL 714/782-5281

TELEPHONE:
PACIFIC BELL
3073 ADAMS, ROOM 216
RIVERSIDE, CA 92504
PENNY HALLGREN 714/359-2516

SYMBOL LIST

- LIGHT STANDARD TYPE "A"
- LIGHT STANDARD TYPE "B"
- REFER TO DETAIL "E" ON SHEET NO. AS INDICATED.
- REFER TO RESPECTIVE PLAN NOTE.
- CONDUIT/WIRE HOME RUN.
- UNDERGROUND CONDUIT/WIRE (MIN. 3/4"C.)

NOTE:
a. 5 TO 6 CURRENT CARRYING WIRES IN CONDUIT TO BE MINIMUM #10 WIRE.
b. 7 TO 9 CURRENT CARRYING WIRES IN CONDUIT TO BE MINIMUM #8 WIRE.
c. MAXIMUM 9 CURRENT CARRYING IN CONDUIT RUN - PLAN NOTE CONDUIT WIRE SIZE TAKES PRECEDENT)
d. PROVIDE CODE SIZE GROUND WIRE IN PVC CONDUIT

- PULLBOX FLUSH IN GRADE. BROOKS #PB1 OR AS NOTED ON PLANS
- W.P. WEATHERPROOF DEVICE (NEMA 3R).
- PROVIDE FURNISH/INSTALL/CONNECT
- E.C. ELECTRICAL CONTRACTOR
- EX. EXISTING
- ABF ABOVE FINISH GRADE
- GFI GROUND FAULT INTERRUPT RECEPTACLE
- N.I.C. NOT IN CONTRACT
- C.O. CONDUIT ONLY (WITH STEEL PULL WIRE).

Construction Legend

- Existing Construction
- New Construction
- Alternate/Future Construction
- Existing Concrete Drain Line
- New Concrete Drain Line

REGISTERED PROFESSIONAL ENGINEER — ELECTRICAL ENGINEERING — STATE OF CALIFORNIA

94-2201-116

REEDCORP ENGINEERING
CONSULTING ELECTRICAL ENGINEERS
2061 Business Center Drive, Suite 110
Irvine, CA 92715
(714) 752-1278 FAX: (714) 752-1278

LANDSCAPE ARCHITECTURE AND PLANNING
515 W. COMMONWEALTH, SUITE 205
FULLERTON, CA 92632 (714)773-0973
ASLA

Heimberger Hirsch & Associates Inc.

Project;

COLLETT PARK
10950 Collett Avenue, Riverside, CA

City of Riverside
Department of Park and Recreation
3900 Main Street
Riverside, CA 92522

LICENSED LANDSCAPE ARCHITECT — CARL O. HEIMBERGER — #1523 — AUG. 31 1995 Renewal Date — OCT. 31 1994 Date — STATE OF CALIFORNIA

Date; 03/20/94
Design; RR
Job No; 93009

Description;
ELECTRICAL SITE PLAN

Sheet 10 of 20

DWG E-1

PROJECT PLAN NO. P-0205

METER PEDESTAL DETAIL (D)

MP1 DETAIL

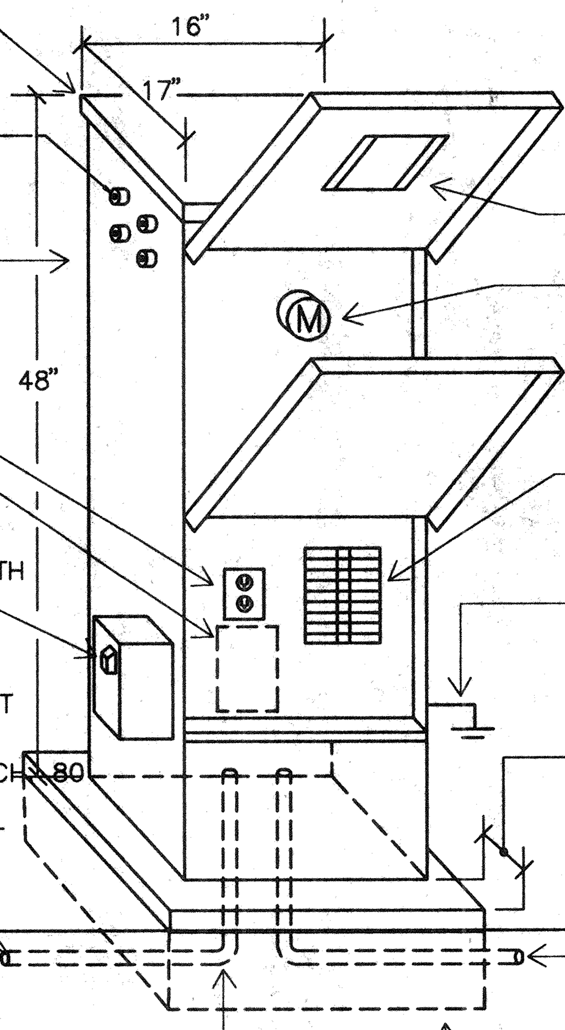

ELECTRICAL CONTRACTOR SHALL PROVIDE CONCRETE FOUNDATION (2000# @ 28 DAYS) AS SHOWN AND PER REQUIRMENTS OF MYERS CO. VERIFY EXACT SIZE OF FOUNDATION (LXW) WITH MEYERS PRIOR TO ROUGH-IN. FOUNDATION SHALL HAVE A MINIMUM DEPTH OF 12"

POLE BASE DETAIL (C)

BAS1 DETAIL

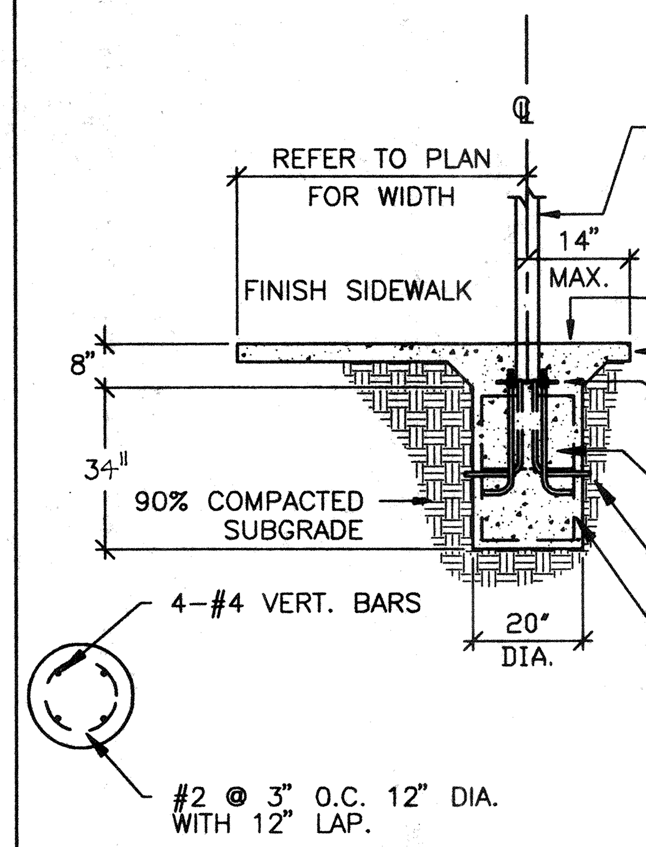

FIXTURE TYPE "B" (FUTURE) (B)

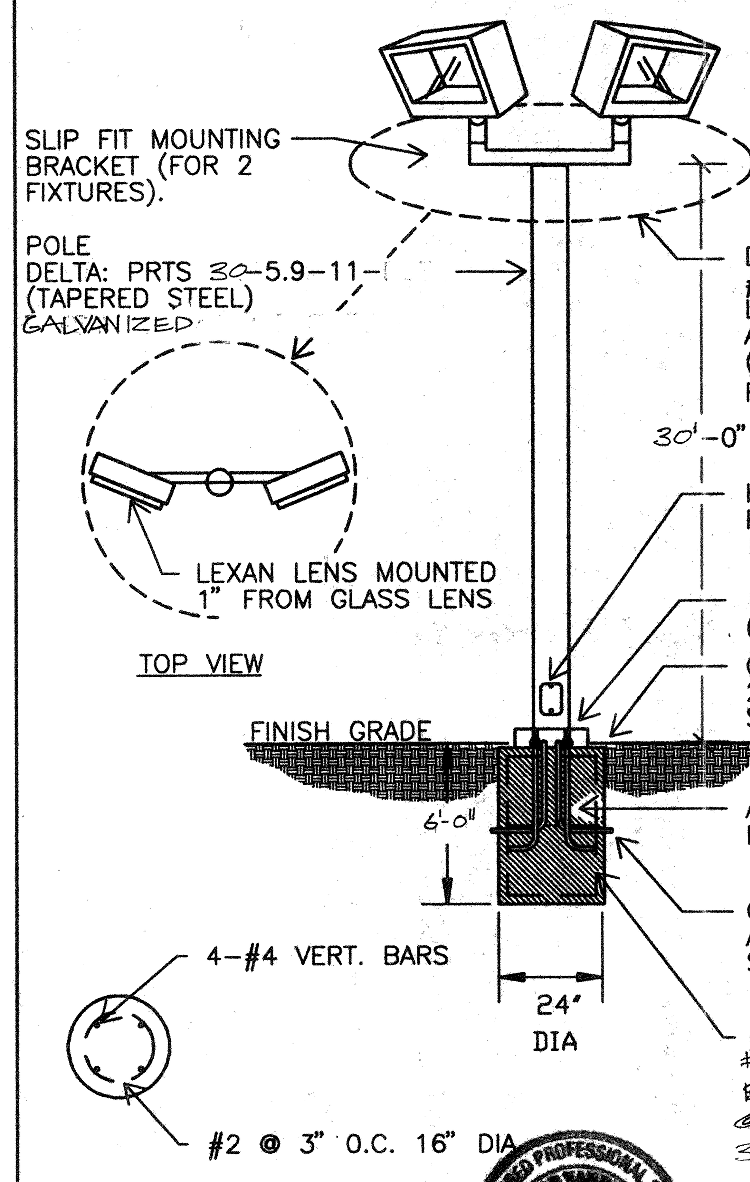

DETAIL AL2

FIXTURE TYPE "A" (A)

BASED ON PH2

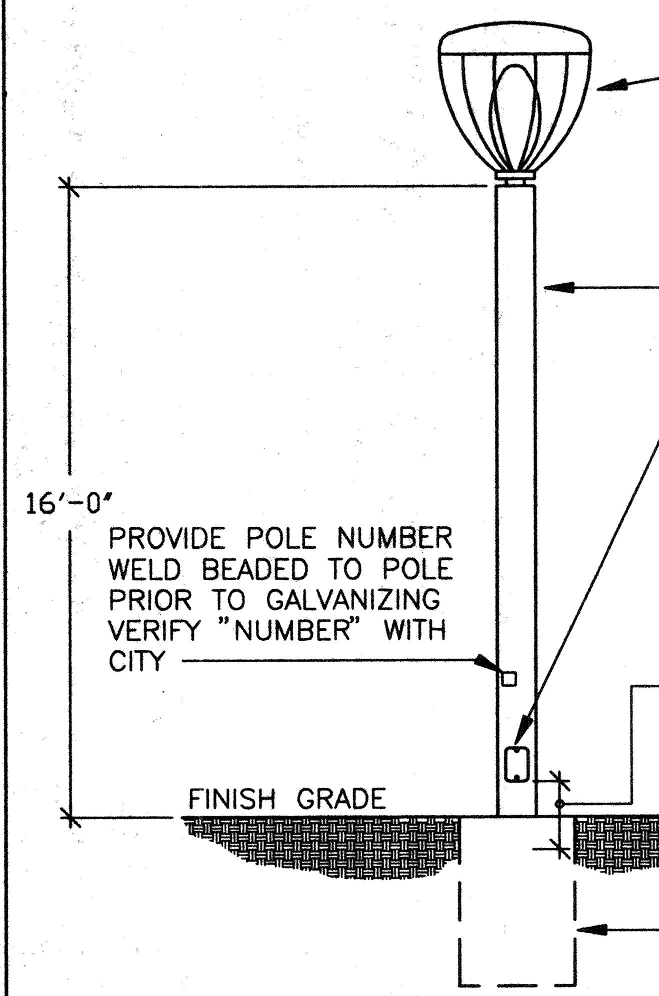

PANEL SCHEDULE (-)

PANEL: X

DATE: 09/27/94 TIME: 14:26:60
JOB:

PANEL VOLTAGE: 480/277 1Φ 3W
BUS: 100
MAINS: 60A/2P
AIC RATING: 14,000

CIRCUIT CODE: blank or N : NON-CONTINUOUS
L : LONG-CONTINUOUS
R : DEMANDABLE RECEPTACLES
K : KITCHEN NO. OF EQUIPMENT: 0

CKT NO	CODE	TRIP	POLE	LOAD DESIGNATION DESCRIPTION	(NOTE)	M	R	L	ΦA	ΦB	A B	ΦA	ΦB	L	R	M	(NOTE)	LOAD DESIGNATION DESCRIPTION	TRIP	POLE	CODE	CKT NO
1	L	20	/	WALKWAY LIGHTING/SIGNS	(A)			10	1000			86				1		TIME CLOCK	20	1	L	2
3	L	/	2	----------------	(A)			10		1000			180			1		IRRIGATION CONTROLLER	20	1		4
5	L	20	/	WALKWAY LIGHTING	(B)			10	1000			1200		4				POLE "B"	20	1	(C)	6
7	L	/	2	-------------	(B)			10		1000			1200	4				POLE "B"			(C)	8
9		20	1	RECEPTACLE			1		180			110		3				PICNIC SHELTER			(D)	10
11		–	1	SPACE									110	3				PICNIC SHELTER			(D)	12
13		–	1	SPACE														SPACE	–	1		14
15		–	1	SPACE														SPACE	–	1		16
17		–	1	SPACE														SPACE	–	1		18
19		–	1	SPACE														SPACE	–	1		20
21		–	1	SPACE														SPACE	–	1		22
23		–	1	SPACE														SPACE	–	1		24

PANEL NOTES: PHASE TOTALS ΦA: 2266 ΦB: 2180

TOTAL CONNECTED VA	4446
CONNECTED VA (CODE N)	360
CONNECTED VA (CODE L)	4086
CONNECTED VA (CODE R)	0
CONNECTED VA (CODE K)	0
PANEL CONNECTED KVA	4.4
PANEL DEMAND KVA	5.5
PANEL DEMAND AMPS	22.8
HIGH Φ AMPS W/LCL	23.2

(A) CIRCUIT CONTROLLED BY 20A/3P RELAY THROUGH TIME CLOCK CHANNEL "A" AND THRU PHOTOCELL #1

(B) CIRCUIT CONTROLLED BY 20A/2P RELAY THROUGH TIME CLOCK CHANNEL "B" AND THRU PHOTOCELL #2

(C) CIRCUIT CONTROLLED BY 20A/2P RELAY THROUGH TIME CLOCK CHANNEL "C" AND THRU PHOTOCELL #3.

(D) CIRCUIT CONTROLLED BY 20A/2P RELAY THROUGH TIME CLOCK CHANNEL "D" AND THRU PHOTOCELL #4

TIME CLOCK = TO PARAGON EC72ST AND PER CITY STANDARDS.

PULL BOX DETAIL (F)

DETAIL PB1

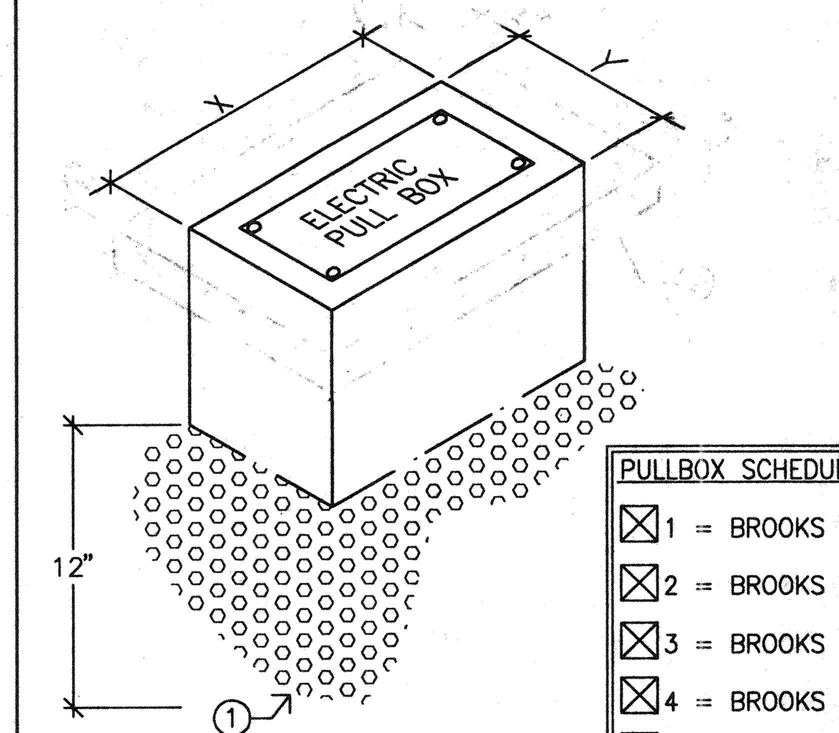

PULLBOX SCHEDULE

- ☒1 = BROOKS NO. 1 PB (8" X 14").
- ☒2 = BROOKS NO. 2/5 PB (10" X 20").
- ☒3 = BROOKS NO. 38PBC (12" X 22").
- ☒4 = BROOKS NO. 66 PBC (16" X 30").
- ☒5 = BROOKS NO. 68 PBC (27" X 45").

PULL BOX NOTES:

(1) PULL BOX BASE. SET ON PEA GRAVEL BASE BENEATH PULL BOX.

TELEPHONE HOOK-UP (E)

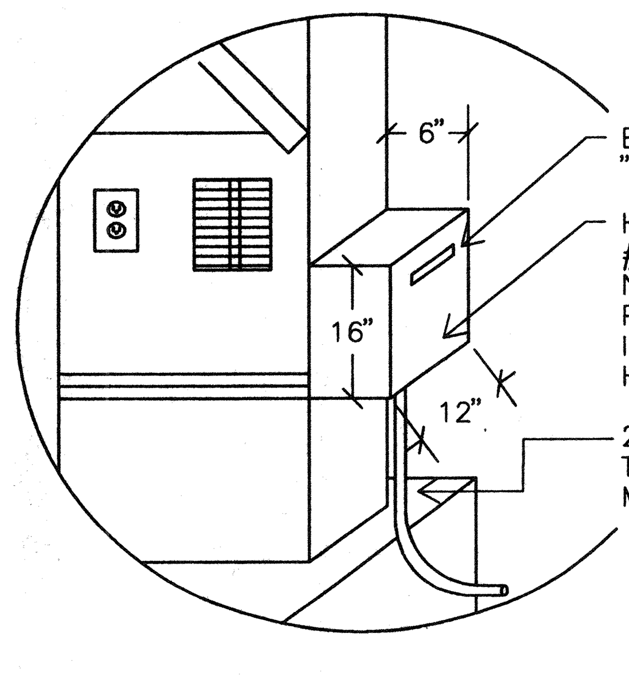

DETAIL CAB4

BID ONLY

93-009-1176

REEDCORP ENGINEERING
CONSULTING ELECTRICAL ENGINEERS
2061 Business Center Drive, Suite 110
Irvine, CA 92715
(714) 752-1278 FAX: (714) 752-1287

LANDSCAPE ARCHITECTURE AND PLANNING
515 W. COMMONWEALTH, SUITE 205
FULLERTON, CA 92632 (714)773-0973
ASLA
Heimberger Hirsch & Associates Inc.

Project;

COLLETT PARK

City of Riverside
Department of Park & Recreation
3900 Main Street
Riverside, CA 92522

Date; 03/20/94
Design; RR
Job No;

Description;
MISCELLANEOUS DETAILS AND PANEL SCHEDULE

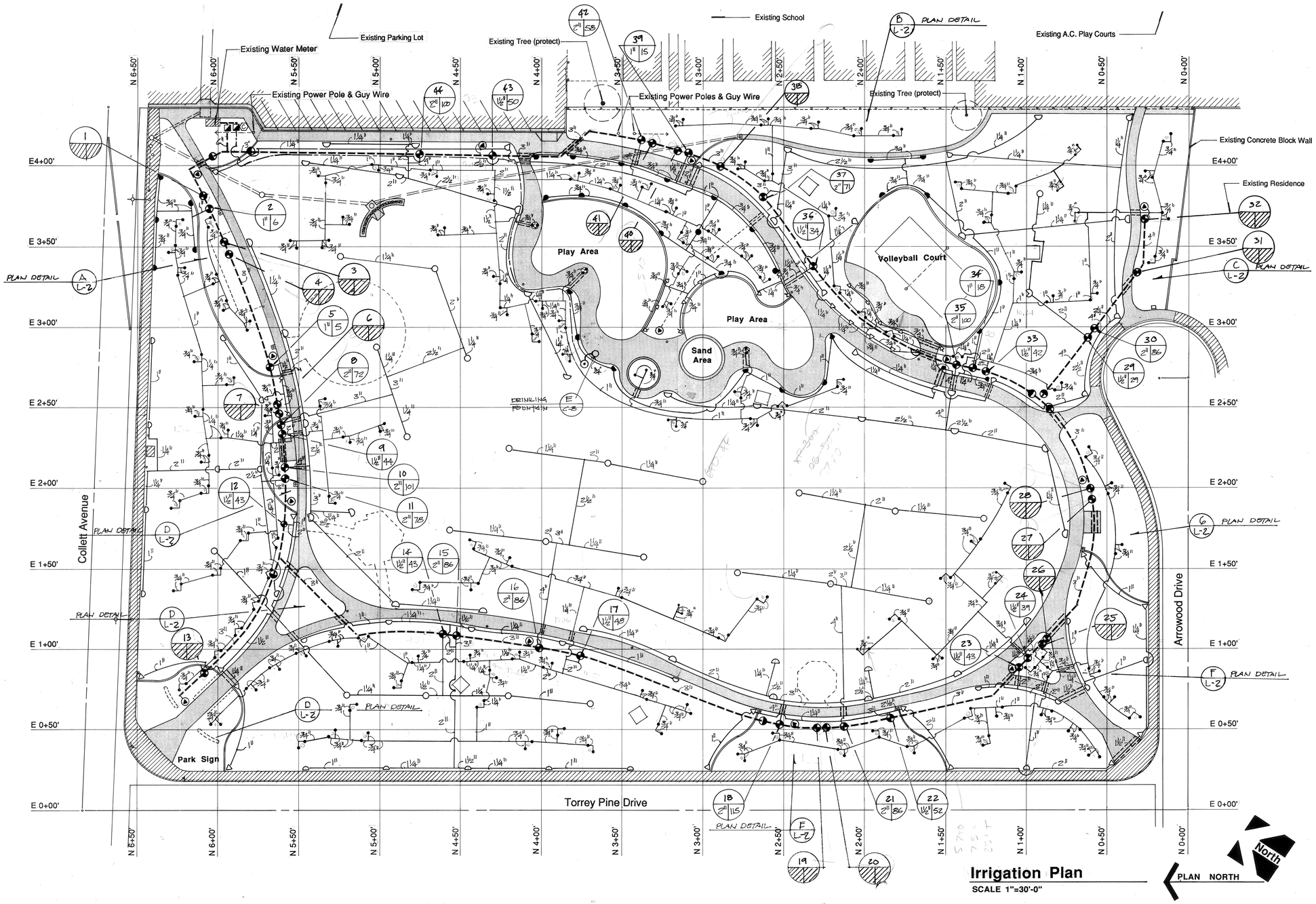

Irrigation Plan

SCALE 1"=30'-0"

Irrigation Notes:

1. All work shall comply with latest edition of 'Uniform Building Code' and 'Uniform Plumbing Code' as well as local ordinances.
2. Irrigation system design pressure is 80 PSI static pressure at the water meter, at a maximum design demand of 200 GPM.
3. Irrigation system shall not be modified or changed in any way without the prior written approval from the Landscape Architect.
4. All piping between meter, backflow device and valves shall be of materials as approved by local ordinances.
5. Adjust all heads, valves or change nozzle size of heads to achieve proper coverage and minimize overspray.
6. Install constant pressure mainline 24" inches below finish grade and 32" below subgrade of streets and/or drives.
7. Install intermittent pressure lateral line 12" below finish grade and 24" below subgrade of streets and/or drives.
8. Contractor shall verify static pressure on site at point of connection prior to start of work. Any discrepancy shall be brought to attention of the Landscape Architect.
9. All mainline pipe and wire under any paving shall be in a Sch 40 PVC sleeve.
10. Refer to specifications for further information. The General Requirements of the specifications shall become part of the irrigation work

Irrigation Legend

Symbol	Manufacturer/Model	Type	Pattern	Spacing	GPM / PSI	Detail
	Toro S 2001 F	Rotor	360°	As Shown	varies @ 50	
	Toro S 2001	Rotor	30°-360°	As Shown	varies @ 50	
	Toro S 700C FC 7.5	Rotor	360°	As Shown	7.8 @ 50	
	Toro S 700C PC 7.5	Rotor	40-330°	As Shown	7.8 @ 50	
	Toro 570 4P Q PC	Spray	90°	As Shown	1.03 @ 50	
	Toro 570 4P H PC	Spray	180°	As Shown	1.5 @ 50	
	Toro 570 4P F PC	Spray	360°	As Shown	2.7 @50	
SHEET L-2	Pepco Quadra 5633	Bubbler	4-way	As Shown	.42 @ 50	
	Pepco Quadra 9633	Bubbler	4-way	As Shown	.76 @ 50	

BALL VALVE FOR P.F. IN SQ. VALVE BOX

Griswold 2230 pressure reducing remote control valve

Bronze Gate Valve 150 PSI rating

2-Toro 8000 series Satellite Irrigation Controller in Le Meur enclosure w/ PHONE MODEM

Febco backflow 4" # 825 in BOLTED METAL ENCLOSURE

Febco backflow 3/4" # 835 in BOLTED METAL ENCLOSURE

Constant Pressure Main Line to be CLASS 315/SCH 40 PVC W/ SOLVENT WELD FITTINGS.

Intermittent Pressure Lateral Line to be Class 200 PVC with Sch. 40 PVC Solvent Weld Fittings.

Quick Coupler valves

Sleeving to be Sch. 40 PVC or ABS

Station Number
Valve Size
GPM of System

Construction Legend

Existing Construction

New Construction

Alternate/Future Construction

LANDSCAPE ARCHITECTURE AND PLANNING

515 W. COMMONWEALTH, SUITE 205
FULLERTON, CA 92632 (714)773-0973

ASLA

Heimberger Hirsch & Associates Inc.

Project;

COLLETT PARK
10950 Collett Avenue, Riverside, CA

City of Riverside
Department of Park and Recreation
3900 Main Street
Riverside, CA 92522

LICENSED LANDSCAPE ARCHITECT
CARL O. HEIMBERGER
#1523
AUG 31 1995
Renewal Date
OCT. 31 1994
Date
STATE OF CALIFORNIA

Date; Oct. 31 1994
Design; C. HEIMBERGER
Job No; 93009

Description;

IRRIGATION PLAN

Sheet 12 of 20

DWG L-1

PROJECT PLAN NO. P-0205

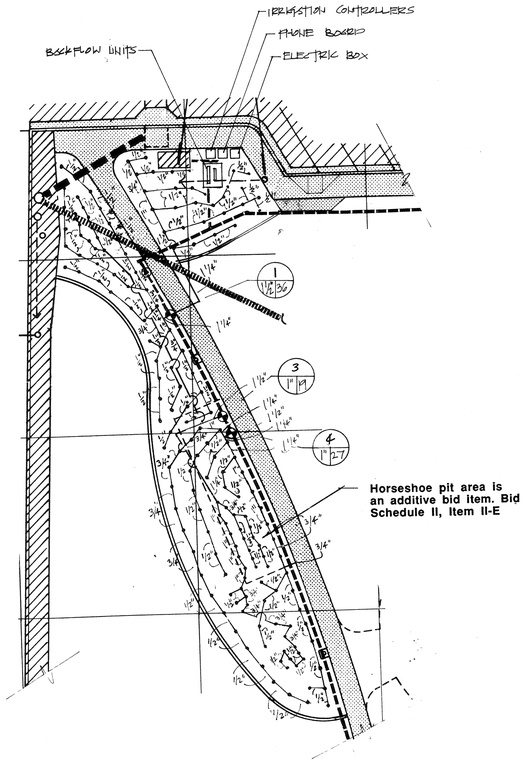

A Irrigation Plan Detail

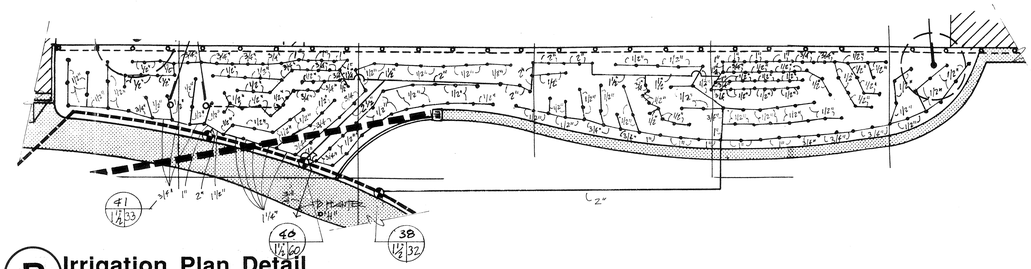

B Irrigation Plan Detail

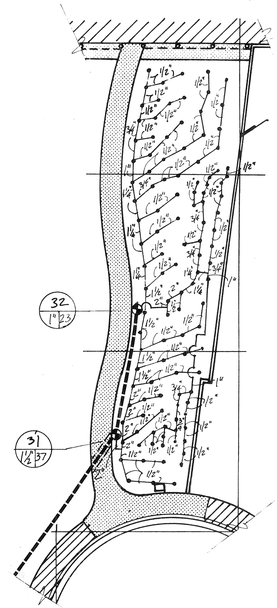

C Irrigation Plan Detail

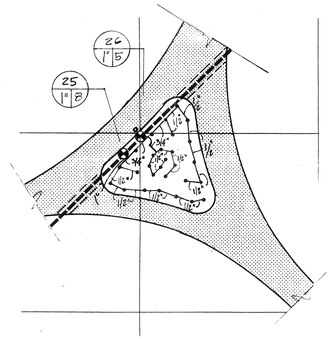

F Irrigation Plan Detail

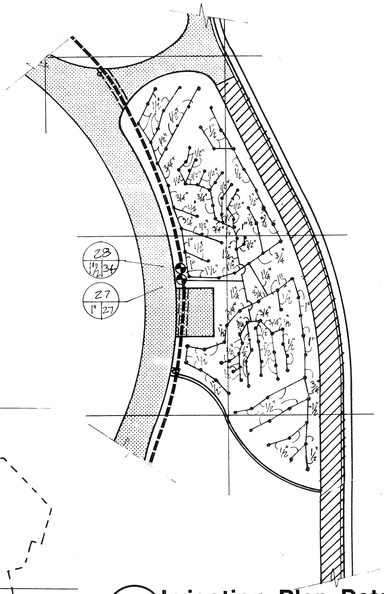

G Irrigation Plan Detail

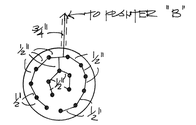

H IRRIGATION PLAN DETAIL

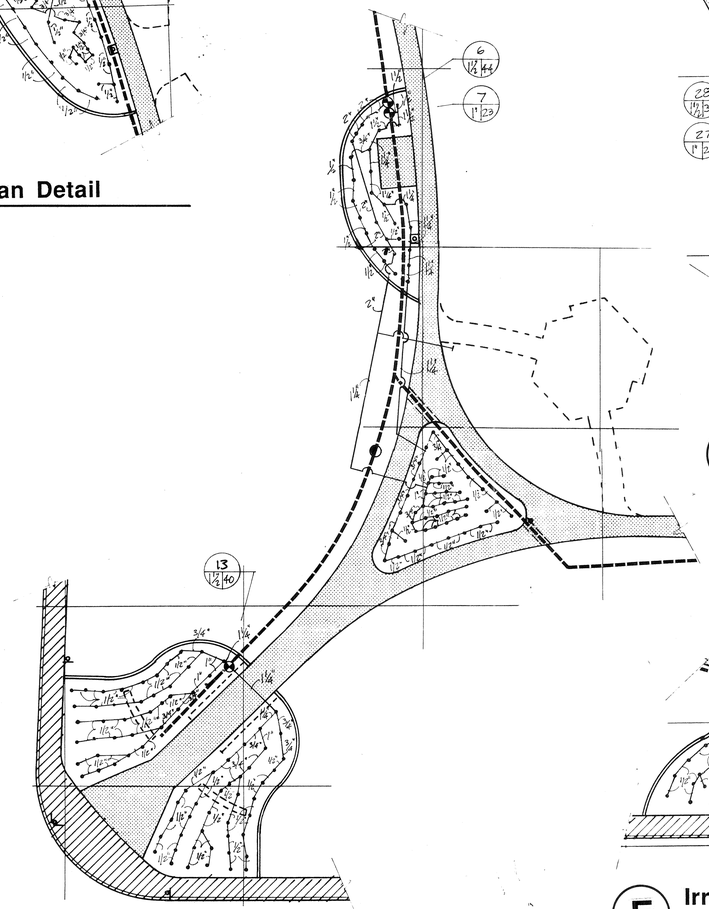

D Irrigation Plan Detail

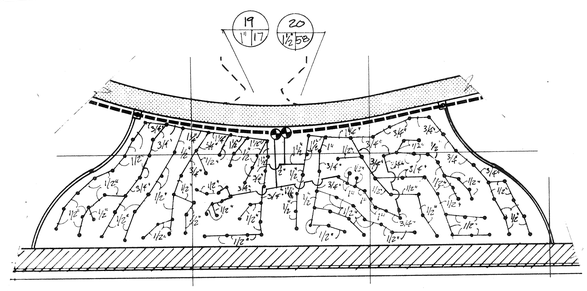

E Irrigation Plan Detail

Irrigation Legend

Symbol	Manufacturer/Model	Type	Pattern	Spacing	GPM / PSI	Detail
•	Pepco Quadra 5633	Bubbler	4-way	As Shown	.42 @ 50	
SHEET L-1	Pepco Quadra 9633	Bubbler	4-way	As Shown	.76 @ 50	

- Griswold 2230 pressure reducing remote control valve
- Constant Pressure Main Line to be Schedule CLASS 315 SCH 40 PVC W/ SOLVENT WELD FITTINGS.
- Intermittent Pressure Lateral Line to be Class 200 PVC with Sch. 40 PVC Solvent Weld Fittings.
- Sleeving to be Sch. 40 PVC or ABS
- Station Number / Valve Size / GPM of System

Irrigation Plan

SCALE: 1"=20'-0"

PLAN NORTH

LANDSCAPE ARCHITECTURE AND PLANNING

515 W. COMMONWEALTH, SUITE 205
FULLERTON, CA 92632 (714)773-0973

ASLA

Heimberger Hirsch & Associates Inc.

Project;

COLLETT PARK
10950 Collett Avenue, Riverside, CA

City of Riverside
Department of Park and Recreation
3900 Main Street
Riverside, CA 92522

LICENSED LANDSCAPE ARCHITECT
CARL O. HEIMBERGER
#1523
AUG. 31 1995
Renewal Date
OCT. 31 1994
Date
STATE OF CALIFORNIA

Date; Oct. 31 1994
Design; C. HEIMBERGER
Job No; 93009

LICENSED LANDSCAPE ARCHITECT
CARL O. HEIMBERGER
#1523
AUG. 31 1995
Renewal Date
FEB. 22 1995
Date
STATE OF CALIFORNIA

Description;

PLANTER IRRIGATION PLAN

Sheet 13 of 20

DWG L-2

PROJECT PLAN NO. P-02

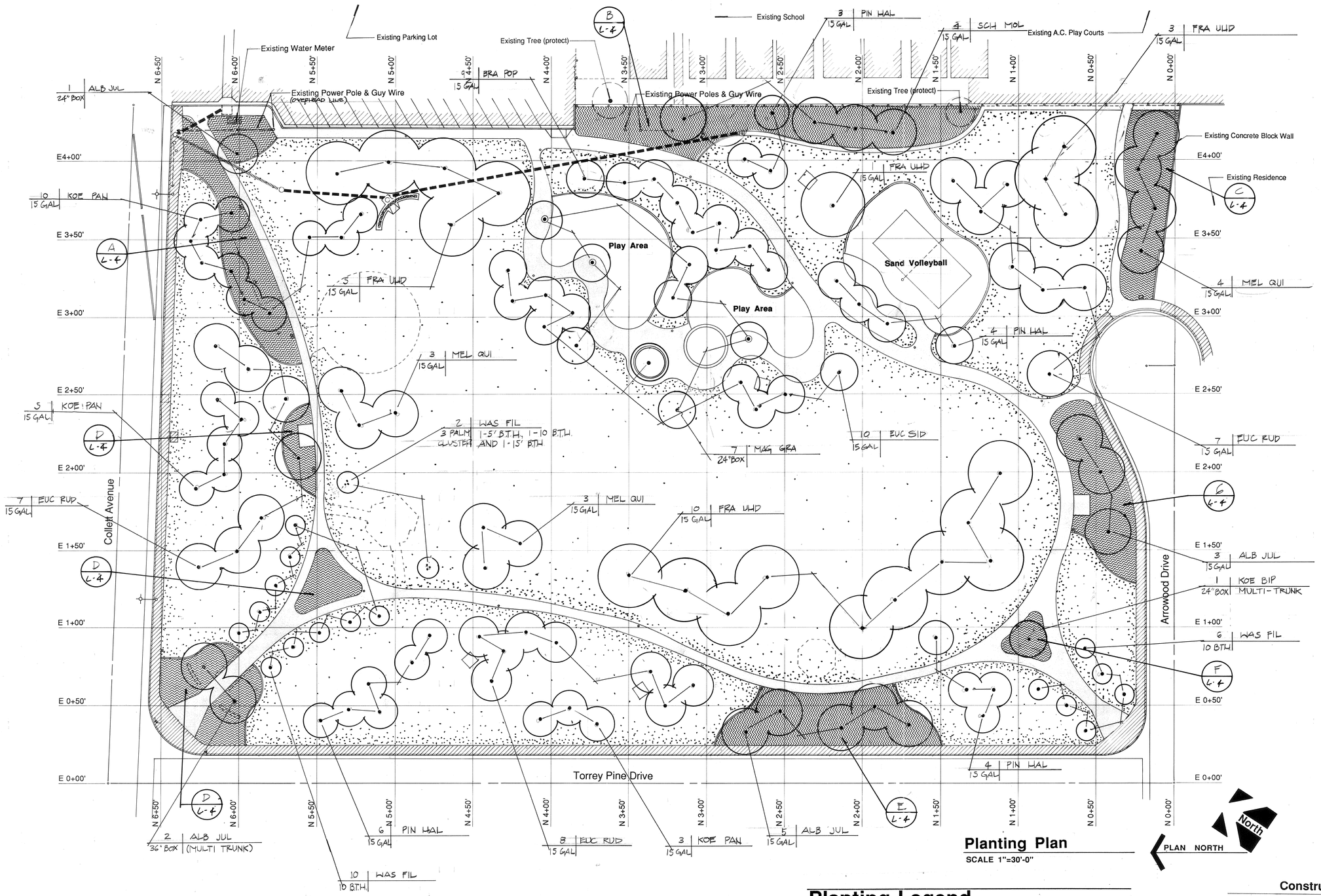

Planting Plan

SCALE 1"=30'-0"

Planting Legend

Symbol	Botanical Name	Common Name	Detail
TREES			
ALB JUL	Albizia julibrissin	Silk Tree	K/L-5
BRA POP	Brachychiton populneus	Bottle Tree	M/L-5
EUC RUD	Eucalyptus rudis	Desert Gum	K/L-5
FRA UHD	Fraxinus uhdei	Shamel Ash	M/L-5
MEL QUI	Melaleuca quinquenervia	Cajeput Tree	M/L-5
MAG GRA	Magnolia grandiflora	'St. Mary'	M/L-5
KOE PAN	Koelreuteria paniculata	Goldenrain Tree	M/L-5
PIN HAL	Pinus halepensis	Aleppo Pine	M/L-5
SCH MOL	Schinus molle	California Pepper	M/L-5
EUC SID	EUCALYPTUS SIDEROXYLON 'ROSEA'	RED IRONBARK	M/L-5
WAS FIL	Washingtonia filifera	California Fan Palm WITH SHAVED TRUNK	L/L-5
GROUNDCOVERS			
	Hydroseed Turf	See Specifications	
	SHRUB - SEE SHRUB PLANTING	DWG L-4	

Construction Legend

- Existing Construction
- New Construction
- Alternate/Future Construction
- Existing Concrete Drain Line
- New Concrete Drain Line

LANDSCAPE ARCHITECTURE AND PLANNING
515 W. COMMONWEALTH, SUITE 205
FULLERTON, CA 92632 (714)773-0973
ASLA
Heimberger Hirsch & Associates Inc.

Project;

COLLETT PARK
10950 Collett Avenue, Riverside, CA

City of Riverside
Department of Park and Recreation
3900 Main Street
Riverside, CA 92522

LICENSED LANDSCAPE ARCHITECT
CARL O. HEIMBERGER
#1523
AUG. 31 1995
OCT. 31 1994
STATE OF CALIFORNIA

Date; Oct. 31 1994
Design; C. HEIMBERGER
Job No; 93009

Description;

Tree Planting Plan

Sheet 14 of 20

DWG L-3

PROJECT PLAN NO. P-0205

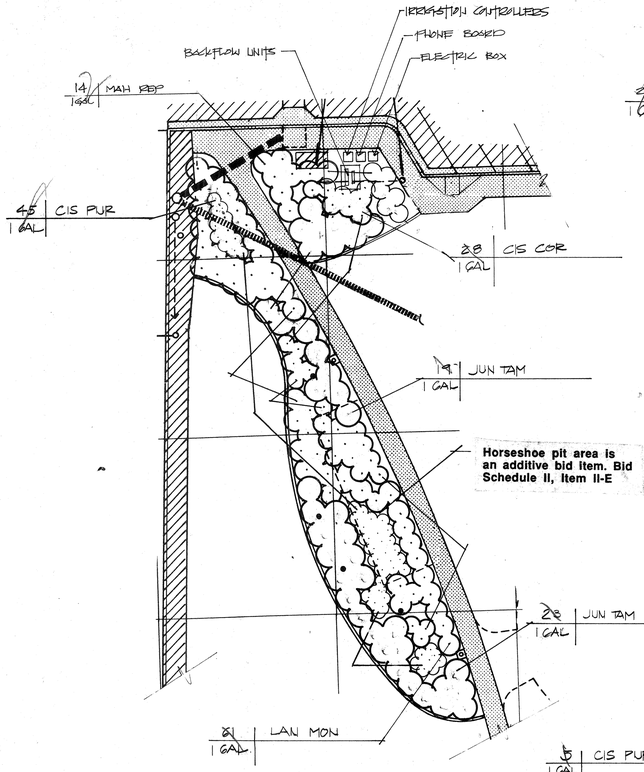

A Shrub Planting

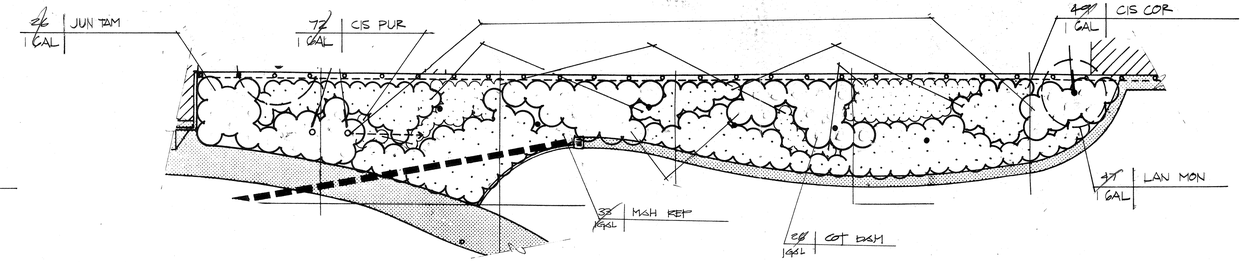

B Shrub Planting

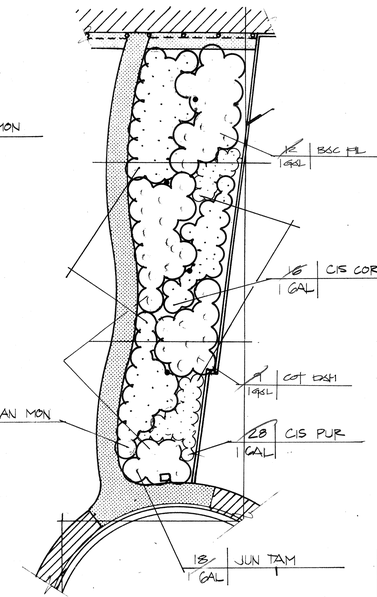

C Shrub Planting

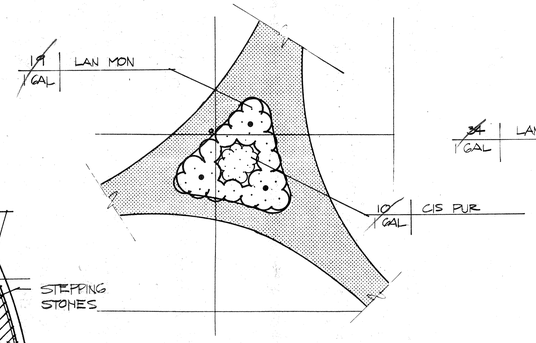

F Shrub Planting

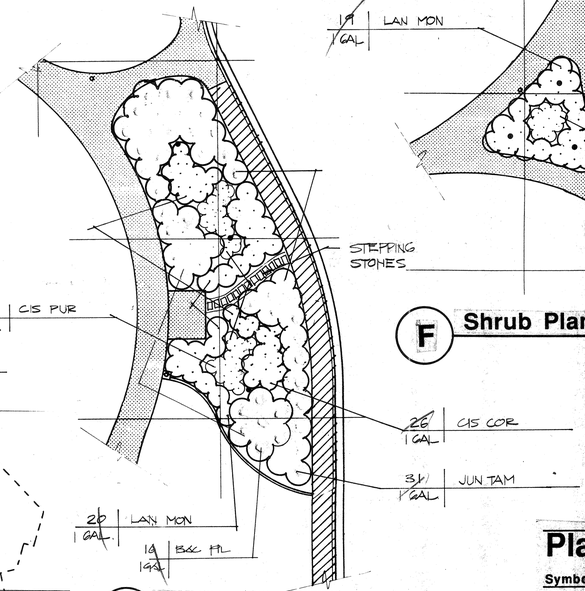

G Shrub Planting

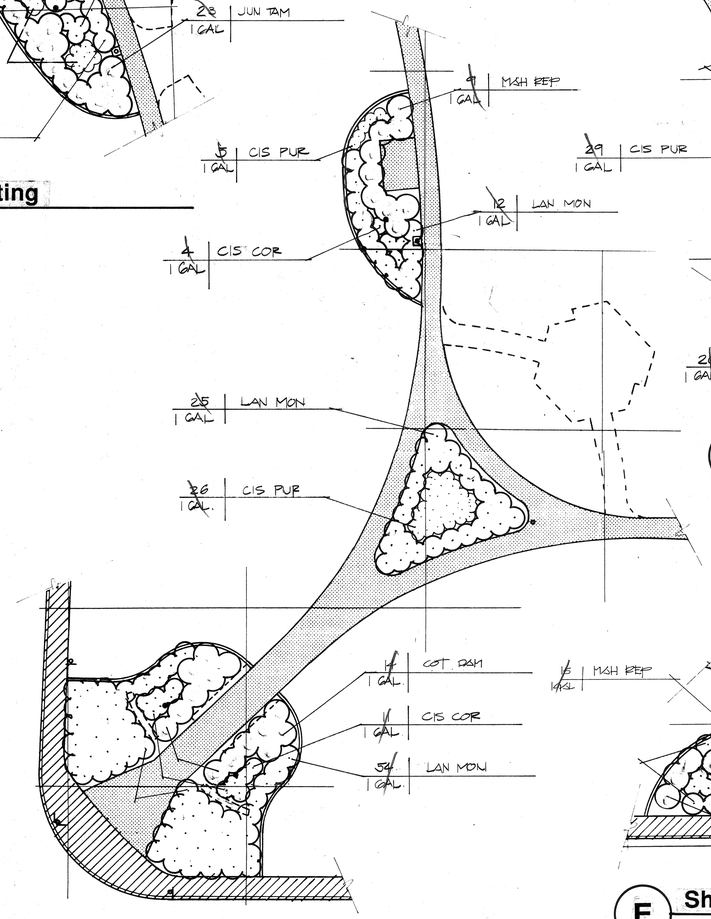

D Shrub Planting

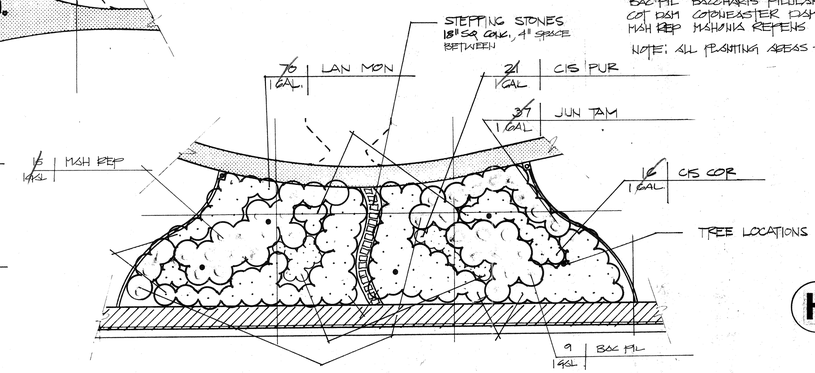

E Shrub Planting

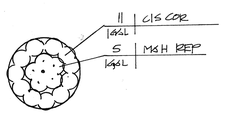

H SHRUB PLANTER

Planting Legend

Symbol	Botanical Name	Common Name	Quantity/Size	Detail
SHRUBS				
CIS COR	Cistus corbariensis	White Rockrose	161 - 1Gal.	N/L-5
JUN TAM	Juniperus sabina 'Tamariscifolia'	Tam Juniper	130 - 1Gal.	N/L-5
LAN MON	Lantana montevidensis	Purple Trailing Lantana	332 - 1Gal.	N/L-5
CIS PUR	Cistus purpurpeus	Orchid Rockrose	236 - 1Gal.	N/L-5
BAC PIL	BACCHARIS PILULARIS	COYOTE BRUSH	37 - 1GAL	N/L-5
COT DAM	COTONEASTER DAMMERI	BEARBERRY COTONEASTER	49 - 1GAL	N/L-5
MAH REP	MAHONIA REPENS	CREEPING MAHONIA	76 - 1GAL	N/L-5

NOTE: ALL PLANTING AREAS TO HAVE 2" BARK MULCH-"KELLOGG" MEDIUM DECORATIVE BARK

Shrub Planting Plan

SCALE 1"=20'-0"

PLAN NORTH

North

BID ONLY

LANDSCAPE ARCHITECTURE AND PLANNING

515 W. COMMONWEALTH, SUITE 205
FULLERTON, CA 92632 (714)773-0973

ASLA

Heimberger Hirsch & Associates, Inc.

Project;

COLLETT PARK
10950 Collett Avenue, Riverside, CA

City of Riverside
Department of Park and Recreation
3900 Main Street
Riverside, CA 92522

LICENSED LANDSCAPE ARCHITECT
CARL D. HEIMBERGER
#1523
Expiration Date AUG. 31 1995
Received Date OCT. 31 1994
STATE OF CALIFORNIA

Date; Oct. 31 1994
Design; C. HEIMBERGER
Job No; 93009

Description;

PLANTER PLANTING PLAN

NOV 01 1994

Sheet 15 of 20

DWG L-4

PROJECT PLAN NO. P-0205

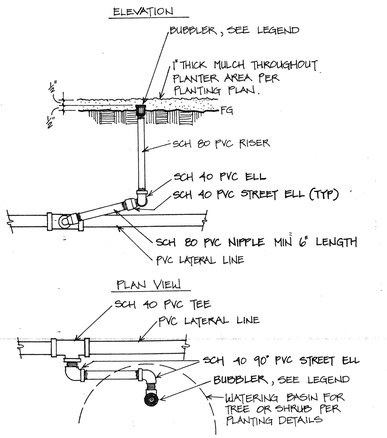

Bubbler Head (SHRUBS) — A

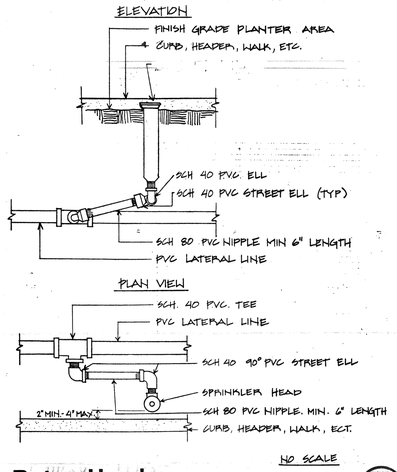

Rotor Head — B

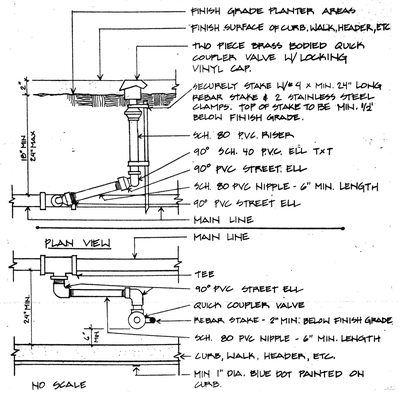

Quick Coupler — C

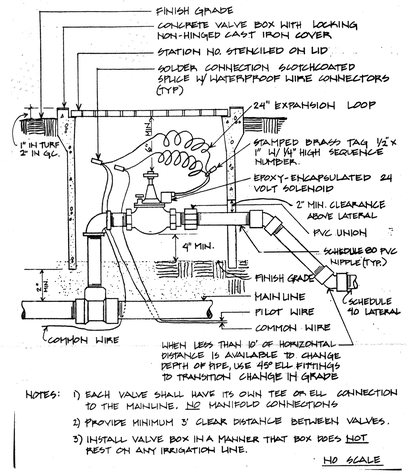

Automatic Valve — D

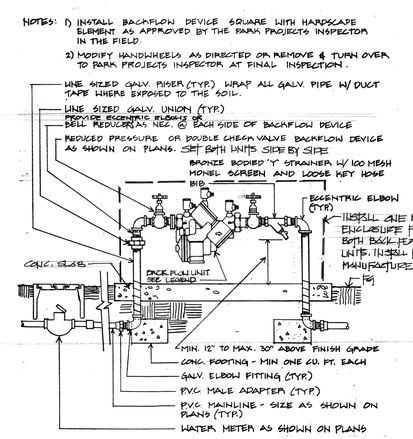

Backflow Device — E

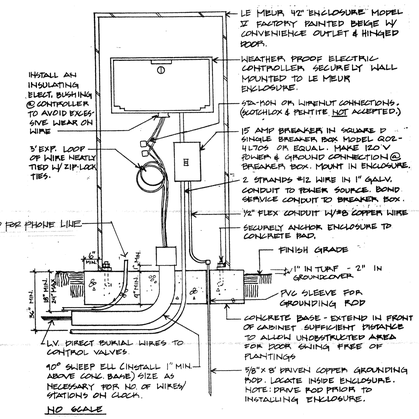

Controller — F

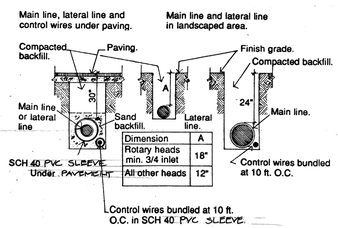

Dimension	A
Rotary heads min. 3/4 inlet	18"
All other heads	12"

Notes:
1. Allow 1' horizontal and vertical clearance between adjacent lines.
2. Compact trenches to 90% in paving areas and to 80% in all landscaped areas.

Trenching — G

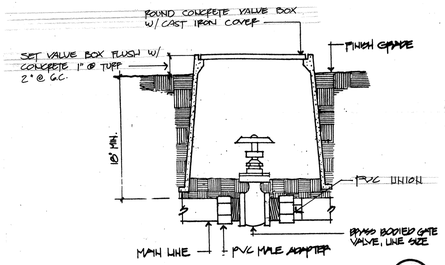

Gate Valve — H

NO SCALE

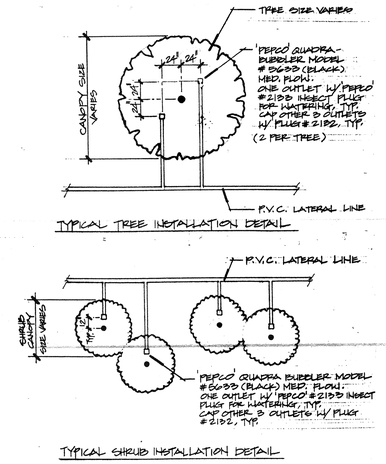

Quadra Bubbler Detail — J

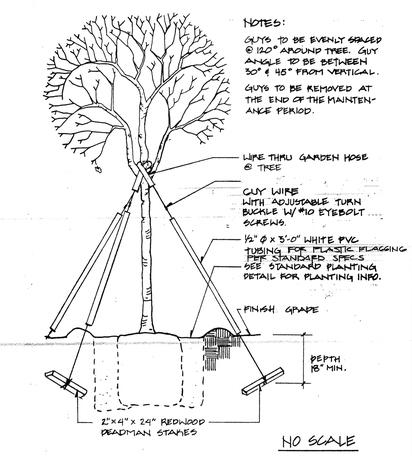

Tree Guying Detail — K

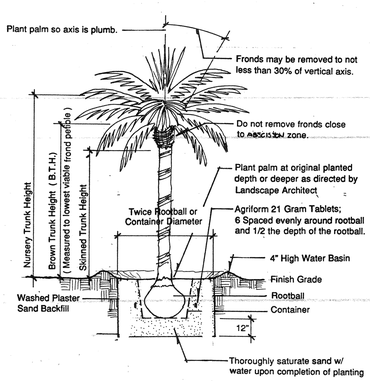

Palm Tree Planting — L

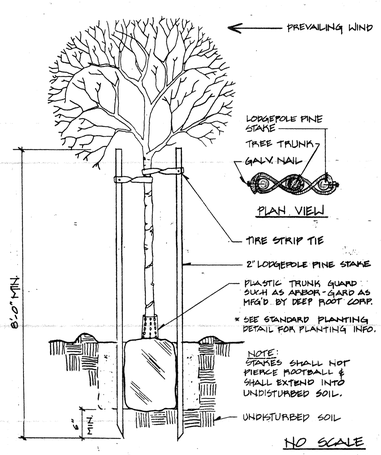

Double Staking Detail — M

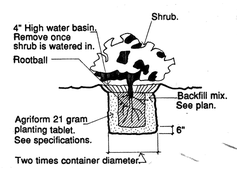

Shrubs — N

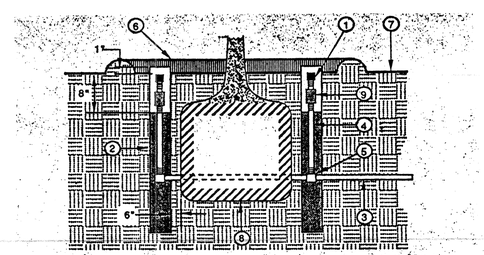

1. Tree Bubbler - refer to irrigation legend for manufacturer and model and irrigation plans for additional information
2. 3" diameter perforated drain pipe (36" long) - filled with pea gravel as shown (cut minimum diameter hole for lateral line penetration - do not cover bubbler
3. PVC Lateral Line Piping - refer to irrigation plans for type, size and burial depth - route around tree to avoid planting conflicts
4. PVC Schedule 40 nipple - length as required (typ.)
5. PVC Schedule 40 SST tee (S x T 90 degree ell at terminus of lateral line)
6. Earthen Berm to retain irrigation water
7. Finish Grade
8. Tree Root Ball - refer to landscape plans for additional information
9. King Bros. "CV" series riser size anti-drain valve (typ.)

BUBBLER HEAD (TREES) — P

LANDSCAPE ARCHITECTURE AND PLANNING
515 W. COMMONWEALTH, SUITE 205
FULLERTON, CA 92632 (714)773-0973
Heimberger Hirsch & Associates Inc.
ASLA

Project;

COLLETT PARK
10950 Collett Avenue, Riverside, CA

City of Riverside
Department of Park and Recreation
3900 Main Street
Riverside, CA 92522

LICENSED LANDSCAPE ARCHITECT
CARL O. HEIMBERGER
#1523
AUG. 31 1995 Renewal Date
OCT. 31 1994 Date
STATE OF CALIFORNIA

Date; Oct. 31 1994
Design; C. HEIMBERGER
Job No; 93009

Description;

IRRIGATION / PLANTING DETAILS

Sheet 16 of 20

DWG L-5

PROJECT PLAN NO. P-0205

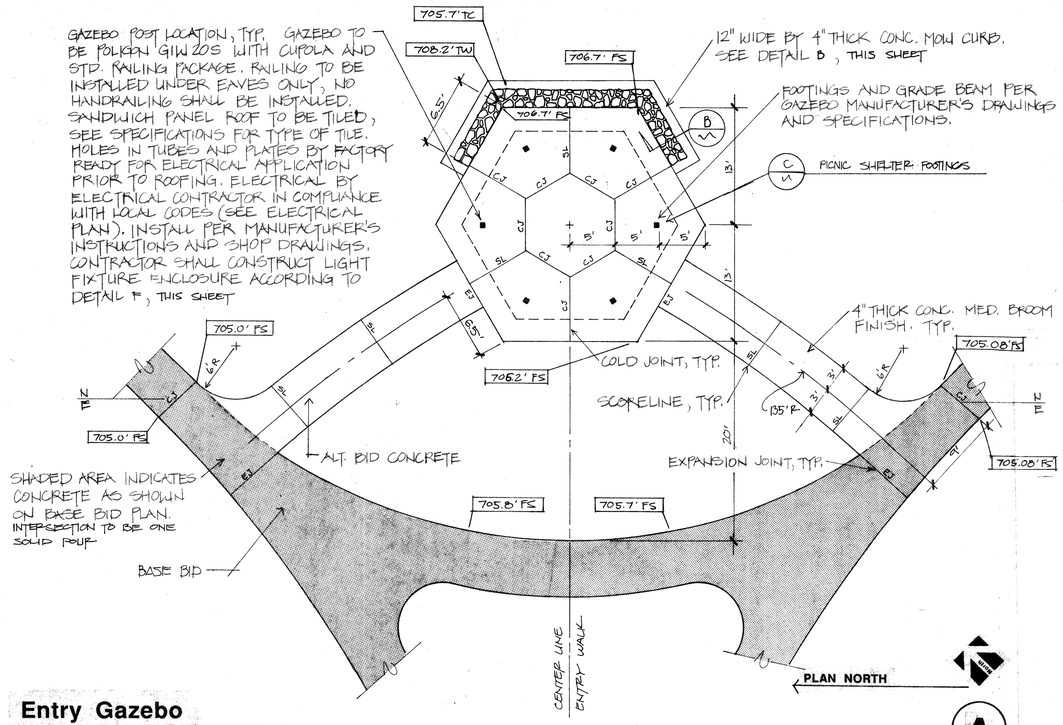

Entry Gazebo

Scale 1/8" = 1'-0"

A

Notes

1. Contractor to provide structural calculations for shelter and footing at the time bid is awarded.
2. Paint colors to be selected by City.
3. Roofing to be composition shingle

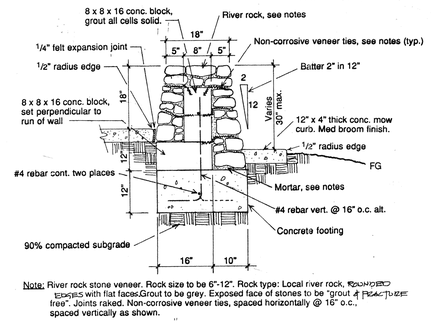

Note: River rock stone veneer. Rock size to be 6"-12". Rock type: Local river rock, ROUNDED EDGES with flat faces.Grout to be grey. Exposed face of stones to be "grout & FRACTURE free". Joints raked. Non-corrosive veneer ties, spaced horizontally @ 16" o.c., spaced vertically as shown.

Stone Faced Wall

B

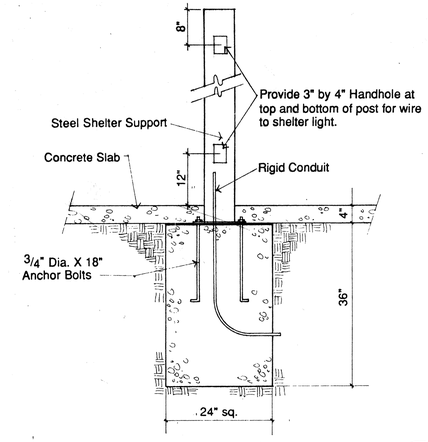

Picnic Shelter Footings

Scale: 3/4" = 1'-0"

C

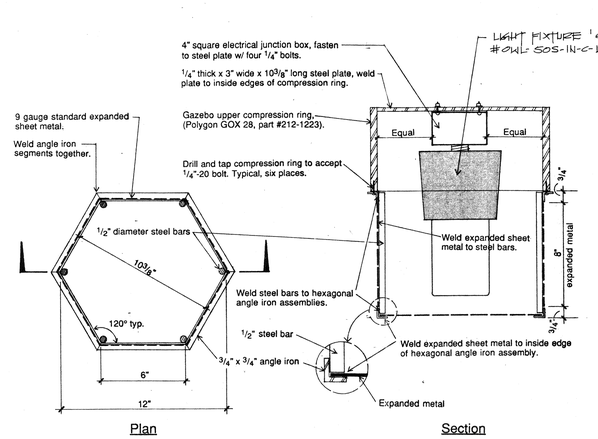

Lighting Fixture Cover

F

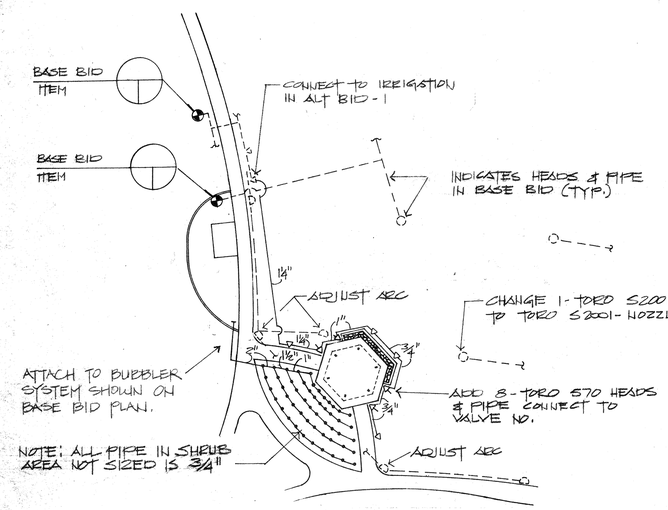

Irrigation Modification

SCALE 1" = 30'-0"

D

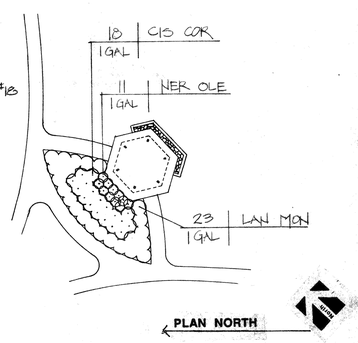

Planting Plan

SCALE 1" = 30'-0"

E

BID ONLY

NOTE: ALL INFORMATION ON THIS PLAN IS FOR ADDITIVE BID. BID SCHEDULE II ENTRY GAZEBO II-A

LANDSCAPE ARCHITECTURE AND PLANNING

515 W. COMMONWEALTH, SUITE 205
FULLERTON, CA 92632 (714)773-0973

ASLA

Heimberger Hirsch & Associates Inc.

Project;

COLLETT PARK
10950 Collett Avenue, Riverside, CA

City of Riverside
Department of Park and Recreation
3900 Main Street
Riverside, CA 92522

LICENSED LANDSCAPE ARCHITECT
CARL O. HEIMBERGER
#1623
AUG. 22 1995
Expiration Date
OCT. 31 1994
Date
STATE OF CALIFORNIA

Date; Oct. 31 1994
Design; C. HEIMBERGER
Job No; 93009

Description;

Additive Alternate Bid
Item II-A Entry Gazebo

NOV 01 1994

Sheet 17 of 20

DWG AB-1

PROJECT PLAN NO. P-0205

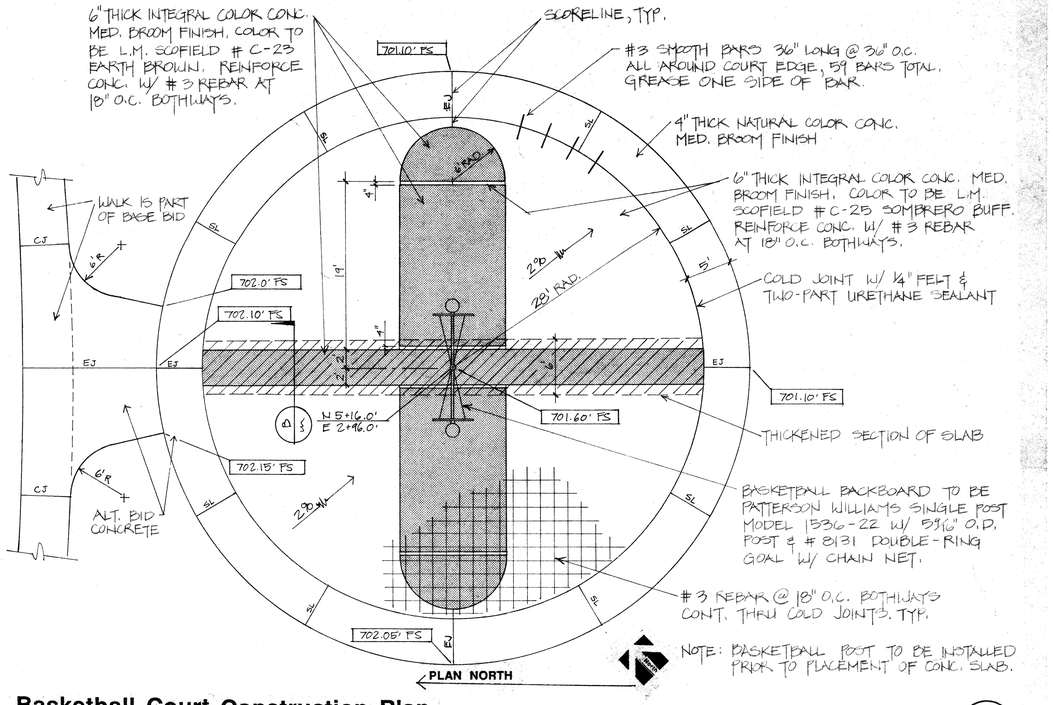

Basketball Court Construction Plan

SCALE 1/8" = 1'-0"

A

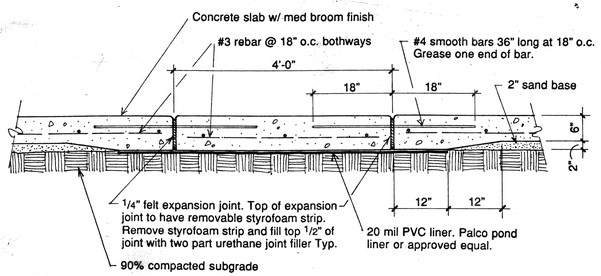

Basketball Court Expansion Joints

B

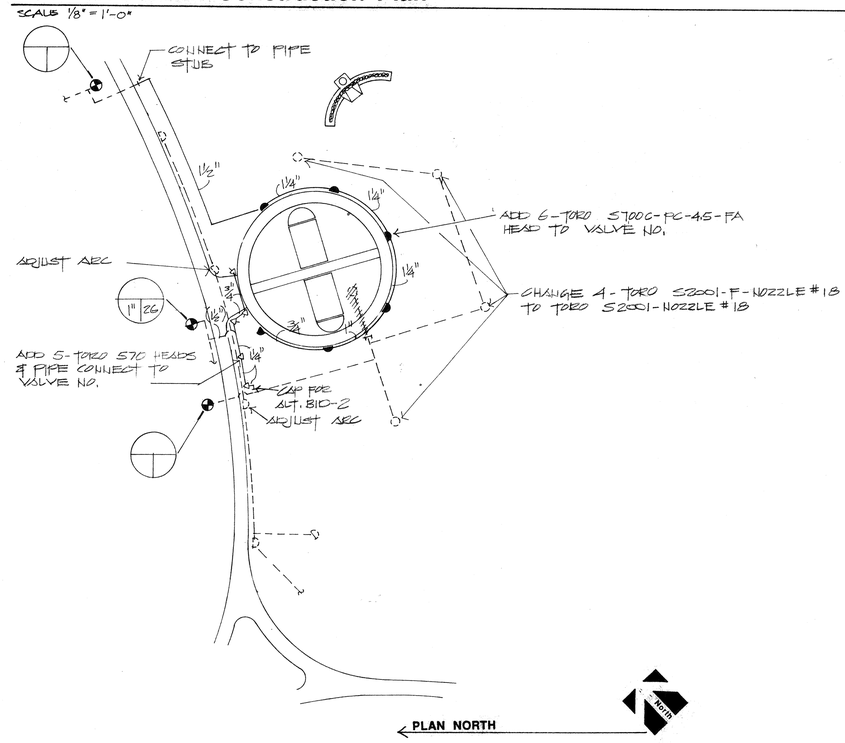

Irrigation Modification

C

NOTE: ALL INFORMATION ON THIS PLAN IS FOR ADDITIVE BID. BID SCHEDULE II, ITEM II B BASKETBALL COURT

LANDSCAPE ARCHITECTURE AND PLANNING
515 W. COMMONWEALTH, SUITE 205
FULLERTON, CA 92632 (714)773-0973
ASLA
Heimberger

Project;

COLLETT PARK
10950 Collett Avenue, Riverside, CA

City of Riverside
Department of Park and Recreation
3900 Main Street
Riverside, CA 92522

LICENSED LANDSCAPE ARCHITECT
CARL O. HEIMBERGER
#1523
Signature
AUG. 31 1995
Renewal Date
OCT. 31 1994
Date
STATE OF CALIFORNIA

Date; Oct. 31 1994
Design; C. HEIMBERGER
Job No; 93009

Description;

Additive Alternate Bid Item II-B Basketball Court and Details

LICENSED LANDSCAPE ARCHITECT
CARL O. HEIMBERGER
#1523
Signature
AUG. 31 1995
Renewal Date
FEB. 29 1996
Date
STATE OF CALIFORNIA

Sheet 18 of 20

DWG AB-2

PROJECT PLAN NO. P-0205

PRE-FABRICATED PICNIC SHELTER "CEDAR FOREST PRODUCTS - SUNSHADE" #SS20 WITH STEEL COLUMNS, DOUGLAS FIR RAFTERS, BEAMS & PURLINS & 2x6 SOUTHERN YELLOW PINE SHADE PANELS. CONTRACTOR TO PROVIDE SHELTER, FOOTINGS & 2-PICNIC TABLES AS ADDITIVE BID - BID SCHEDULE II, ITEM II-C

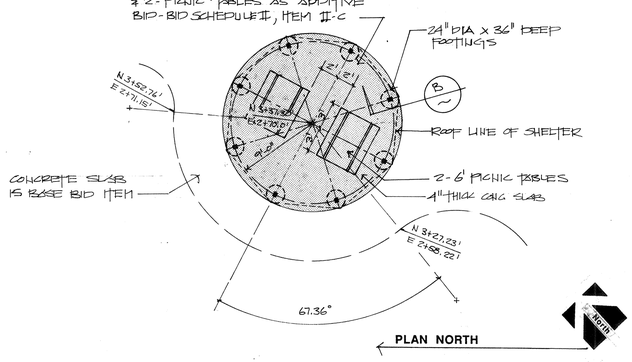

Picnic Shelter at Play Area (A)

Scale 1/8" = 1'-0"

Notes

1. Contractor to provide structural calculations for shelter and footing at the time bid is awarded.
2. Paint colors to be selected by City.

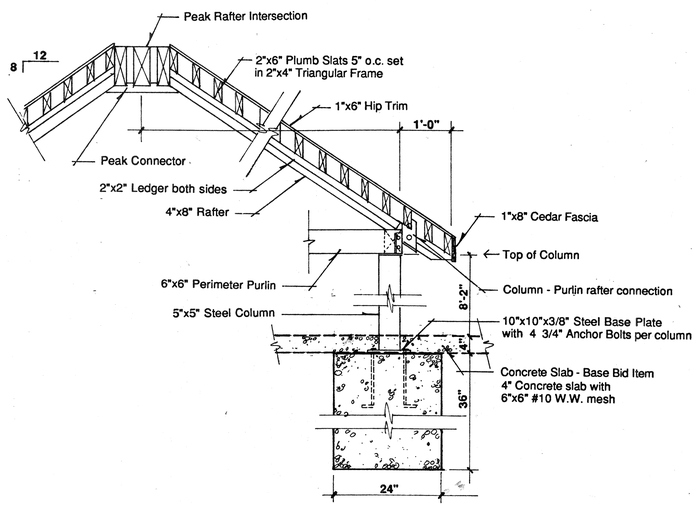

Picnic Shelter Section (B)

Scale 3/4" = 1'-0"

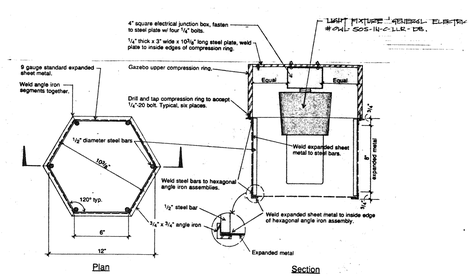

Lighting Fixture Cover

NOTE: PLAY AREA PICNIC SHELTER SHOWN IN THIS SECTION IS A ADDITIVE BID ITEM. BID SCHEDULE II, ITEM II-C.

PRE-FABRICATED PICNIC SHELTER "CEDAR FOREST PRODUCTS - SUNSHADE" #SS20 WITH STEEL COLUMNS, DOUGLAS FIR RAFTERS, BEAMS & PURLINS & 2x6 SOUTHERN YELLOW PINE SHADE PANELS. CONTRACTOR TO PROVIDE & INSTALL SHELTER, FOOTINGS, CONCRETE SLAB & 2-PICNIC TABLES AS ADDITIVE BID, BID SCHEDULE II, ITEM II-D.

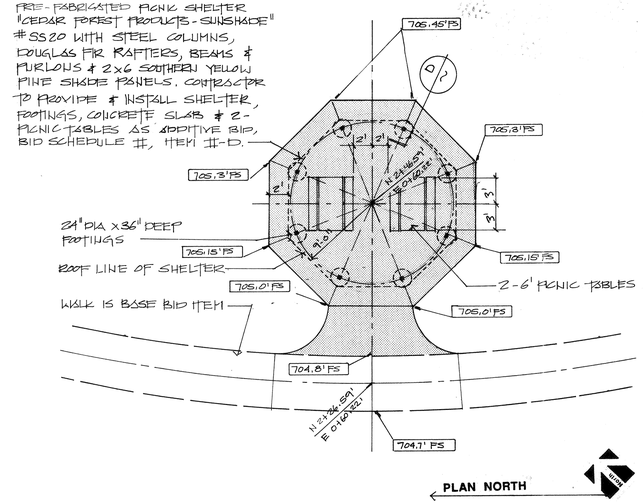

Picnic Shelter in Park (C)

Scale 1/8" = 1'-0"

NOTE: PARK PICNIC SHELTER SHOWN IN THIS SECTION IS A ADDITIVE BID ITEM, BID SCHEDULE II, ITEM II-D.

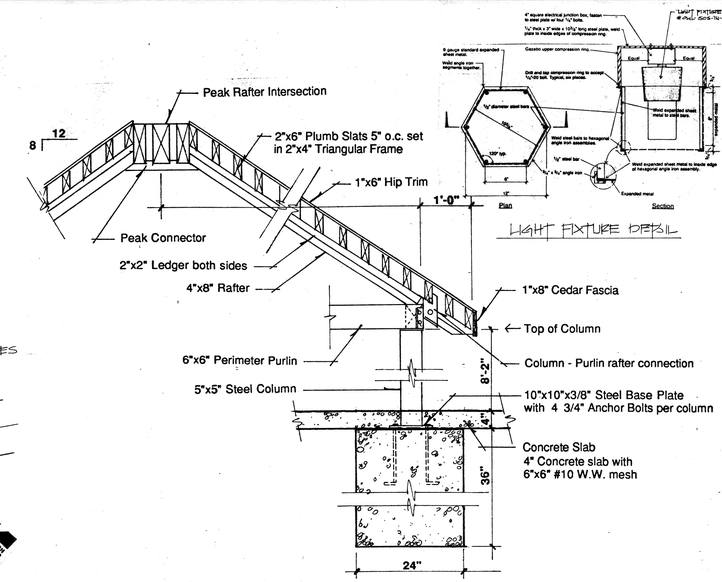

Picnic Shelter Section (D)

Scale 3/4" = 1'-0"

Notes

1. Contractor to provide structural calculations for shelter and footing at the time bid is awarded.
2. Paint colors to be selected by City.

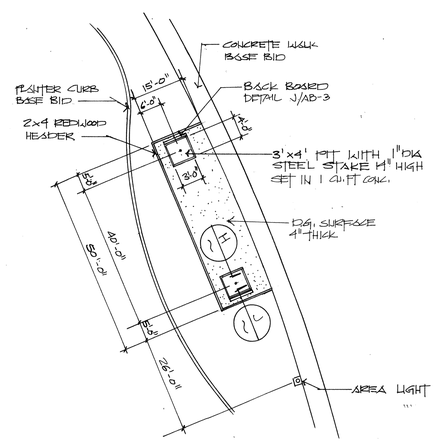

HorseShoe Pit Construction Plan (E)

Scale 1" = 10'-0"

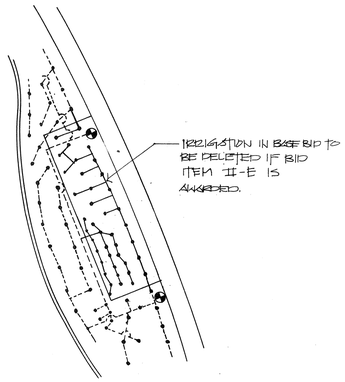

Irrigation Modification (F)

Scale 1" = 10'-0"

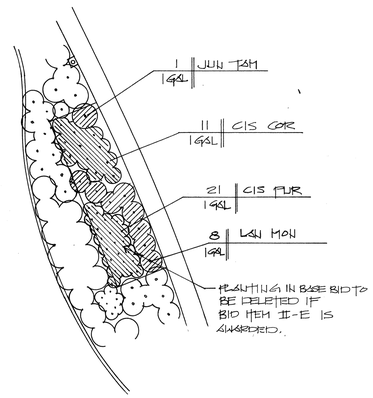

Planting Modification (G)

Scale 1" = 10'-0"

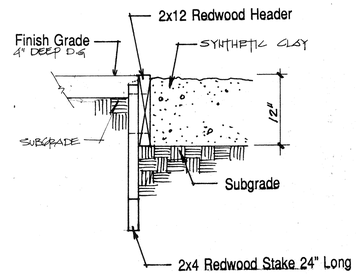

Pit Detail (H)

NTS

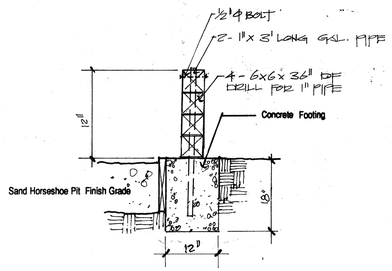

Backboard Detail (J)

NTS

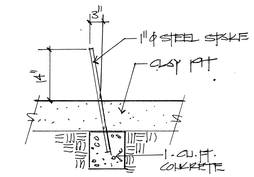

STAKE DETAIL

BID ONLY

NOTE: HORSE SHOE PIT SHOWN IN THIS SECTION IS A ADDITIVE BID ITEM. BID SCHEDULE II, ITEM II-E

LANDSCAPE ARCHITECTURE AND PLANNING
515 W. COMMONWEALTH, SUITE 205
FULLERTON, CA 92632 (714)773-0973
ASLA
Heimberger Hirsch & Associates Inc.

Project;

COLLETT PARK
10950 Collett Avenue, Riverside, CA

City of Riverside
Department of Park and Recreation
3900 Main Street
Riverside, CA 92522

LICENSED LANDSCAPE ARCHITECT
CARL O. HEIMBERGER
#1523
AUG 31 1995
OCT. 31 1994
Date
STATE OF CALIFORNIA

Date; Oct. 31 1994
Design; C. HEIMBERGER
Job No; 93009

Description;

Additive Alternate Bid Item II-D, II-E, II-C. Horseshoe Pit, Picnic Shelter,

NOV 01 1994

Sheet 19 of 20

DWG AB-3

PROJECT PLAN NO. P-0205

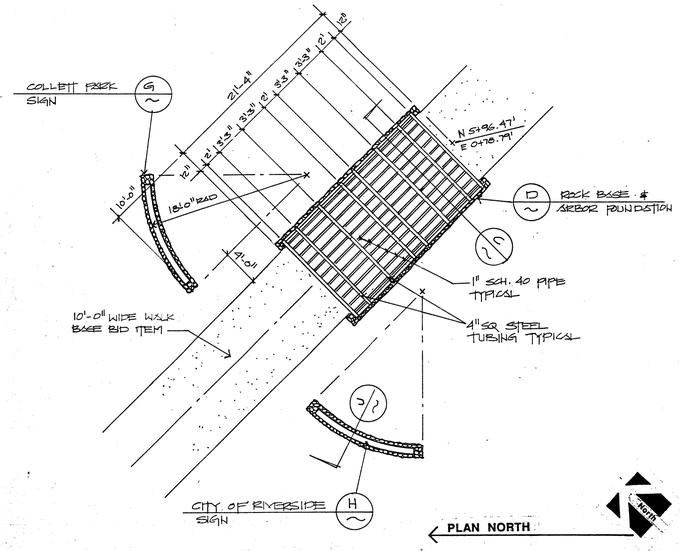

Entry Arbor/Sign Plan View (A)

Scale 1/8 " = 1' - 0"

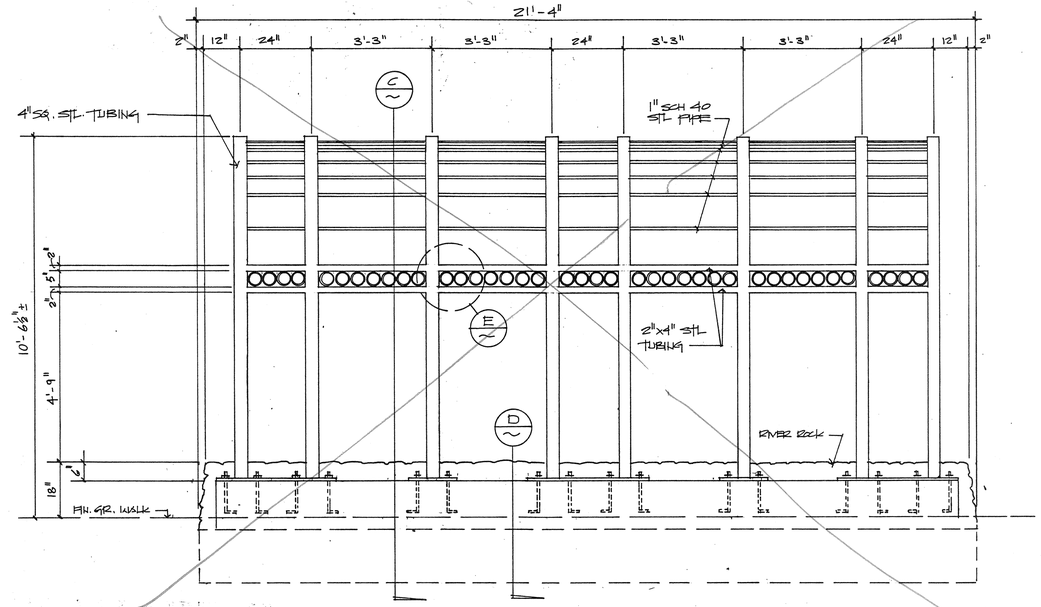

Entry Arbor Elevation (B)

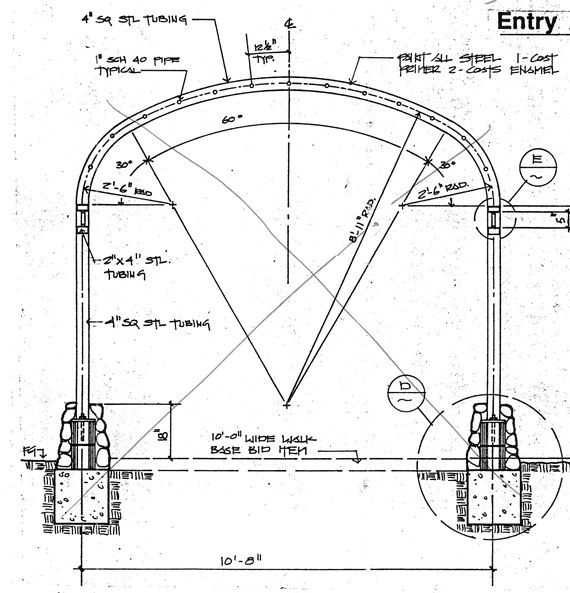

Entry Arbor Section (C)

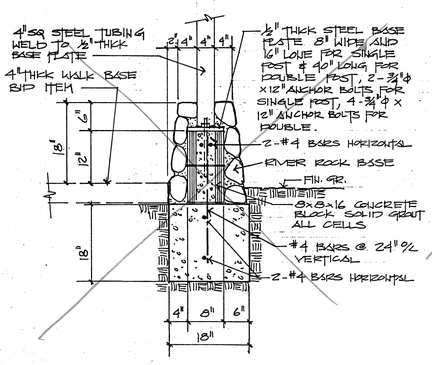

Entry Arbor (D)

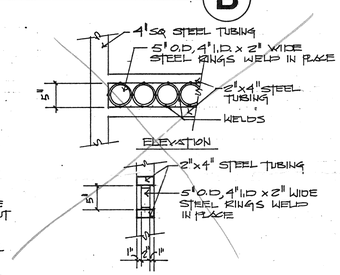

Entry Arbor Ring Detail (E)

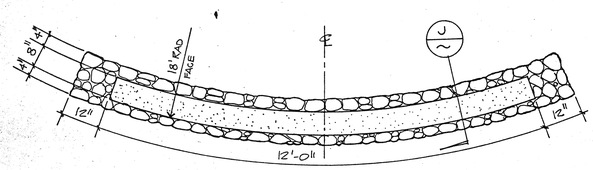

Sign Wall Plan (F)

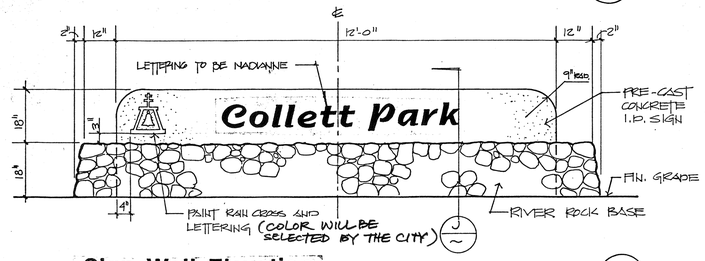

Sign Wall Elevation (G)

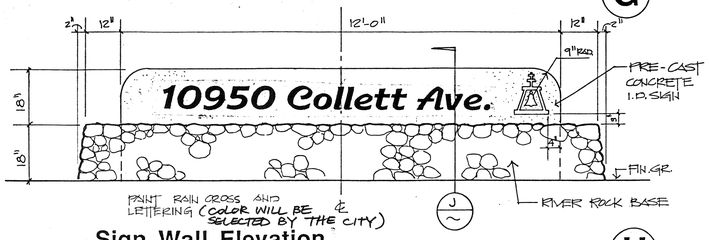

Sign Wall Elevation (H)

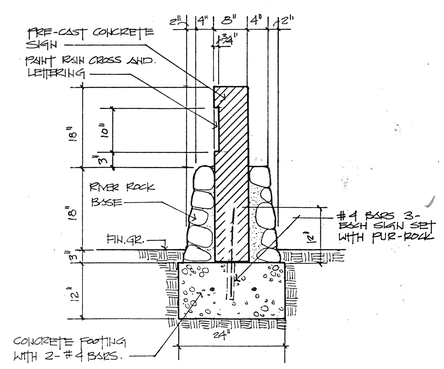

Sign Wall Section (J)

Notes

1. Contractor to provide structural calculations for shelter and footing at the time bid is awarded.
2. Paint colors to be selected by City.

BID ONLY

NOTE: ALL INFORMATION ON THIS AREA IS FOR ADDITIVE BID, BID SCHEDULE #, ITEM II-F ENTRY ARBOR.

LANDSCAPE ARCHITECTURE AND PLANNING
515 W. COMMONWEALTH, SUITE 205
FULLERTON, CA 92632 (714)773-0973
ASLA
Heimberger Hirsch & Associates Inc.

Project;

COLLETT PARK
10950 Collett Avenue, Riverside, CA

City If Riverside
Department of Park and Recreation
3900 Main Street
Riverside, CA 92522

LICENSED LANDSCAPE ARCHITECT CARL D. HEIMBERGER #1523 AUG. 31 1995 OCT. 31 1994 STATE OF CALIFORNIA

Date; Oct. 31 1994
Design; C. HEIMBERGER
Job No; 93009

Description;

Additive Bid Item II-F

Sheet 20 of 20

DWG AB-4

PROJECT PLAN NO. P-0205

NOV 0 1 1994