NOTES

1. THERE ARE TWO MONUMENTS.
2. FINISHED MONUMENTS TO HAVE STUCCO COAT AND PAINT FINISH.
3. FRABRICATION TO INCLUDE STRUCTURAL AND FOOTING DESIGN.

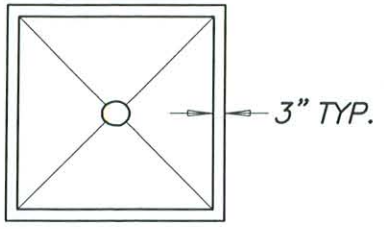

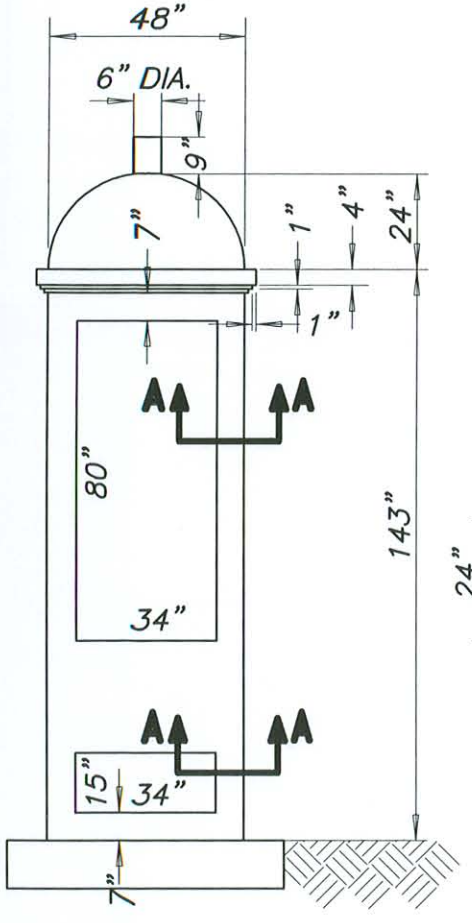

E-W VIEW

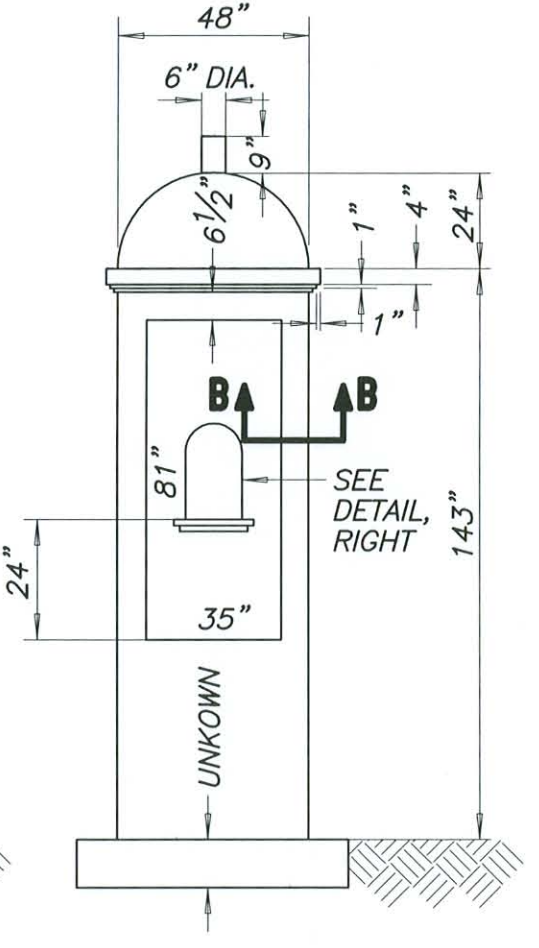

N-S VIEW

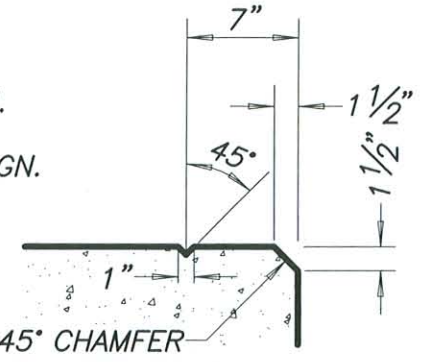

SECTION A-A

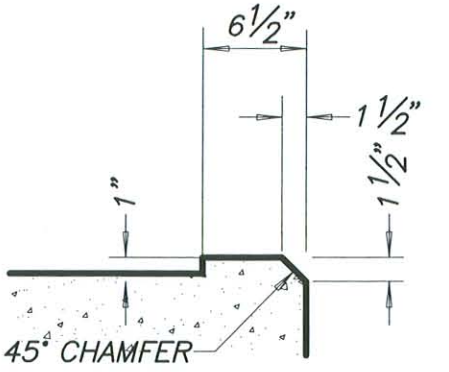

SECTION B-B

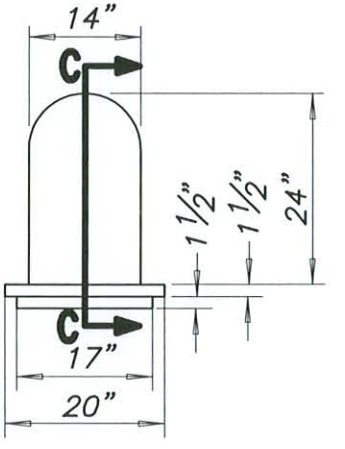

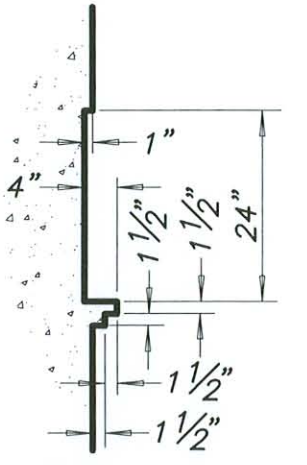

SECTION C-C

CITY OF RIVERSIDE

PUBLIC WORKS DEPARTMENT – ENGINEERING DIVISION

UNIVERSITY DR. MONUMENT DETAIL

SCALE: NTS	Sheet 1 of 1