RIVERSIDE COUNTY FLOOD CONTROL AND WATER CONSERVATION DISTRICT

ANZA CHANNEL - STAGE II

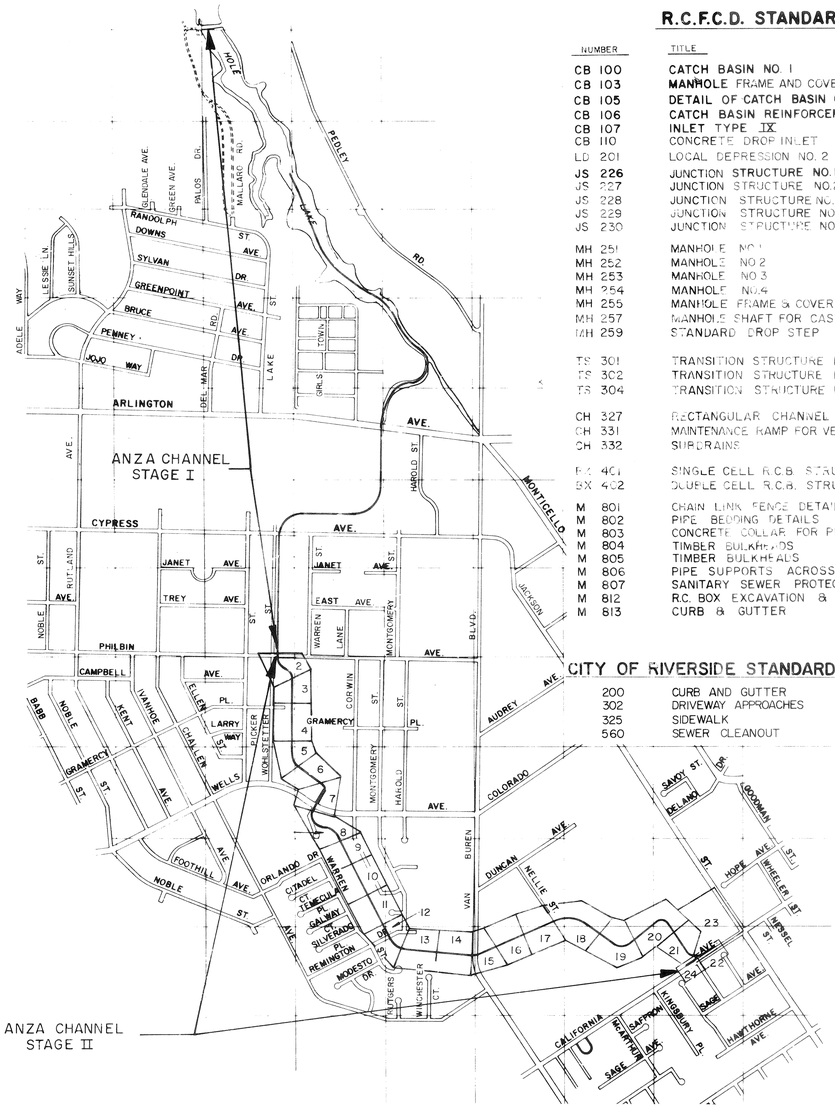

R.C.F.C.D. STANDARD DRAWINGS

NUMBER	TITLE	SHEET NO.
CB 100	CATCH BASIN NO. 1	
CB 103	MANHOLE FRAME AND COVER FOR CATCH BASINS	
CB 105	DETAIL OF CATCH BASIN OPENING	
CB 106	CATCH BASIN REINFORCEMENT	
CB 107	INLET TYPE IX	
CB 110	CONCRETE DROP INLET	
LD 201	LOCAL DEPRESSION NO. 2	
JS 226	JUNCTION STRUCTURE NO. 1	
JS 227	JUNCTION STRUCTURE NO. 2	
JS 228	JUNCTION STRUCTURE NO. 3	
JS 229	JUNCTION STRUCTURE NO. 4	
JS 230	JUNCTION STRUCTURE NO. 5	
MH 251	MANHOLE NO. 1	
MH 252	MANHOLE NO. 2	
MH 253	MANHOLE NO. 3	
MH 254	MANHOLE NO. 4	
MH 255	MANHOLE FRAME & COVER, NON-ROCKING	
MH 257	MANHOLE SHAFT FOR CAST PIPE	
MH 259	STANDARD DROP STEP	
TS 301	TRANSITION STRUCTURE NO. 1	
TS 302	TRANSITION STRUCTURE NO. 2	
TS 304	TRANSITION STRUCTURE NO. 4	
CH 327	RECTANGULAR CHANNEL STRUCTURAL DETAILS	
CH 331	MAINTENANCE RAMP FOR VERTICAL WALL CHANNEL	
CH 332	SUBDRAINS	
BX 401	SINGLE CELL R.C.B. STRUCTURAL DETAILS	
BX 402	DOUBLE CELL R.C.B. STRUCTURAL DETAILS	
M 801	CHAIN LINK FENCE DETAIL	
M 802	PIPE BEDDING DETAILS	
M 803	CONCRETE COLLAR FOR PIPES 12" THROUGH 60"	
M 804	TIMBER BULKHEADS	
M 805	TIMBER BULKHEADS	
M 806	PIPE SUPPORTS ACROSS TRENCHES	
M 807	SANITARY SEWER PROTECTION	
M 812	R.C. BOX EXCAVATION & BACKFILL PAY LINES	
M 813	CURB & GUTTER	

CITY OF RIVERSIDE STANDARD DRAWINGS

200	CURB AND GUTTER
302	DRIVEWAY APPROACHES
325	SIDEWALK
560	SEWER CLEANOUT

ABBREVIATIONS

ABND.	ABANDONED
A.C.	ASPHALT CONCRETE
A.C.P.	ASBESTOS CEMENT PIPE
∆ PT.	ANGLE POINT
B.C.	BEGIN CURVE
B.C.R.	BEGIN CURB RETURN
C.B.	CATCH BASIN
C.I.P.	CAST IRON PIPE
CL.	CLASSIFICATION
C.M.P.	CORRUGATED METAL PIPE
CONC.	CONCRETE
COND.	CONDUIT
C.P.	CONTROL POINT
C/R	CITY OF RIVERSIDE
DWY.	DRIVEWAY
E.C.	END CURVE
E.C.R.	END CURB RETURN
EL.	ELEVATION
F.L.	FLOW LINE
G.C.	GRADE CHANGE
H.G.L.	HYDRAULIC GRADE LINE
J.S.	JUNCTION STRUCTURE
L	LENGTH
L.D.	LOCAL DEPRESSION
M.H.	MANHOLE
P.C.C.	PORTLAND CEMENT CONCRETE
P.R.C.	POINT OF REVERSE CURVE
R	RADIUS
R.C.B.	REINFORCED CONCRETE BOX
R.C.P.	REINFORCED CONCRETE PIPE
S.B.	SOIL BORING
S.D.	STORM DRAIN
SHT.	SHEET
STA.	STATION
T	TANGENT LENGTH
T.C.	TOP OF CURB
T.S.	TRANSITION STRUCTURE
R/W	RIGHT OF WAY
EXIST.	EXISTING
T.C.E.	TEMPORARY CONSTRUCTION EASEMENT

LEGEND

ANCHOR & POLE
BUILDING
BURIED TELEPHONE CABLE
CATCH BASIN
CONCRETE GUTTER
CONTROL LINE
CULVERT WITH HEADWALLS
CURB FACE
DRIVEWAY
EXISTING FLOW LINE
FENCE (OTHER THAN CHAIN LINK)
FENCE (EXISTING CHAIN LINK)
FENCE (CHAIN LINK TO BE CONST.)
FIRE ALARM CONDUIT
FIRE HYDRANT
GAS LINE
GAS METER
IRRIGATION LINE
JUNCTION STRUCTURE NO. 1 & 2
MANHOLE COVER (STORM DRAIN)
MANHOLE (SEWER)
MTD, MCD TELEPHONE
T.C.E. LINE
PARKWAY
SIDEWALK
PROPERTY LINE
ELECTRICAL LINE
SANITARY SEWER LINE
SIGN
SOIL BORING
STORM DRAIN LINE (EXISTING)
STREET LIGHT
STREET LIGHT STANDARD
STREET LIGHT UNDERGROUND
STREET RIGHT OF WAY
TELEPHONE OR POWER POLE
TRAFFIC LIGHT (OVERHEAD)
TRAFFIC LOOP
TRAFFIC SIGNAL CONDUIT
TREE
WALL (BLOCK OR MASONRY)
WATER LINE
WATER METER
WATER VALVE
REINFORCED CONCRETE BOX
RECTANGULAR CONCRETE CHANNEL
INDICATES FUTURE CONSTRUCTION
LIMITS OF GRADING
SPRINKLER HEAD
IRRIGATION CONTROL VALVE

GENERAL NOTES

1. TIES FOR CATCH BASINS AS SHOWN ON THE DRAWINGS ARE FROM CURB RETURN TO CENTER LINE OF CATCH BASIN, UNLESS OTHERWISE SHOWN. WHERE NO TIE IS SHOWN L.D. SHALL BEGIN AT CURB RETURN.
2. "V_i" IS THE DEPTH OF INLET OF CATCH BASINS IN SERIES MEASURED FROM TOP OF CURB TO INVERT OF CONNECTOR PIPE.
3. ALL RESURFACING, CURBS, GUTTERS, SIDEWALKS, DRIVEWAYS AND OTHER EXISTING IMPROVEMENTS TO BE RECONSTRUCTED SHALL BE CONSTRUCTED AT THE SAME ELEVATION AND LOCATION AS THE EXISTING IMPROVEMENTS, UNLESS OTHERWISE NOTED.
4. STREET RESURFACING SHALL BE, 3" A.C. ON 6" CLASS 3 AGGREGATE BASE, UNLESS OTHERWISE SHOWN.
5. CHANNEL ACCESS ROAD SHALL BE UNPAVED.
6. ALL OPENINGS RESULTING FROM CUTTING OR PARTIAL REMOVAL OF EXISTING CULVERTS, PIPES OR SIMILAR STRUCTURES SHALL BE SEALED WITH 8" OF CLASS "B" CONCRETE, NOTED ON THE DRAWINGS AS "PLUG."
7. PIPE CONNECTIONS TO MAIN LINE SHALL CONFORM TO STANDARD DRAWINGS J.S. NO. 3 OR J.S. NO. 4, UNLESS OTHERWISE SHOWN.
8. CENTERWALLS OF ALL DOUBLE BOXES SHALL BE ROUNDED PER DETAIL ON SHEET NO. 25.
9. THE REINFORCEMENT FOR THE ACCESS RAMP WALLS AND SLAB SHALL BE THE SAME AS THE STRUCTURAL SECTION NOTED ON THE PLAN. THE THICKNESS OF THE RAMP SHALL BE 9". THE REINFORCING OF THE CHANNEL WALL SHALL BE BENT INTO THE RAMP SLAB.
10. FOR ALL NOTES AND CONSTRUCTION LEGEND FOR STREET IMPROVEMENTS SEE SHEET NO. 29 & 30.

MAY 28 1975

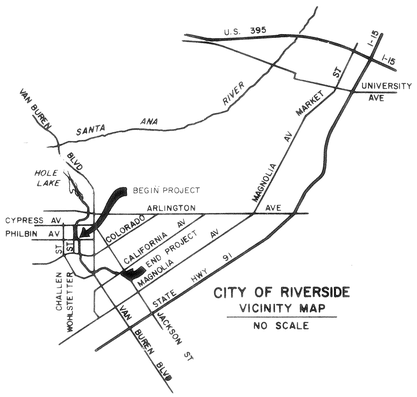

CITY OF RIVERSIDE
VICINITY MAP
NO SCALE

DRAWING INDEX

DRAWING INDEX	SHEET NO.
TITLE SHEET, LOCATION MAP, LEGEND & DRAWING INDEX	1
ANZA CHANNEL PLAN & PROFILE	2-22
RETENTION BASIN	23
CALIFORNIA AVENUE LATERAL	24
MISCELLANEOUS DETAILS	25
CONNECTOR PIPE PROFILES	25-27
RETENTION BASIN INLET-OUTLET STRUCTURE	28
CALIFORNIA AVENUE IMPROVEMENT PLANS	29
JACKSON STREET & GRAMERCY PLACE IMPROVEMENT PLANS	30
RETENTION BASIN LANDSCAPING & IRRIGATION PLANS	31-32
WOHLSTETTER ST. LANDSCAPING & IRRIGATION PLANS	33-34
MISCELLANEOUS LANDSCAPING & IRRIGATION DETAILS	35
VAN BUREN BOULEVARD DETOUR PLANS	36-37

LOCATION MAP

800 0 800 1600 FEET
SCALE

BENCH MARK
SCALE:
DATE:

ALDERMAN SWIFT & LEWIS CONSULTING ENGINEERS
APPROVED BY
DATE
REGISTERED CIVIL ENGINEER NO. 11543

REVISIONS
REF. DESCRIPTION APPR. DATE

RIVERSIDE COUNTY FLOOD CONTROL AND WATER CONSERVATION DISTRICT
DESIGNED BY: G.L.H.
DRAWN BY: E.C.H.
DATE DRAWN: OCT. 1973
CHECKED BY: G.L.H.
APPROVED BY:
CHIEF ENGINEER R.E. NO. 8822
DATE:

ANZA CHANNEL
STAGE II
1970 STORM DRAIN BOND ISSUE PROJECT NO. 18

PROJECT NO 1-0-150
DRAWING NO 1-319
SHEET NO 1 OF

County Flood Control - Anza Channel - Stage II

NOTE: CONTRACTOR SHALL PROTECT IN PLACE ALL UTILITIES CROSSING OR PARALLELING THE STORM DRAIN, UNLESS OTHERWISE NOTED.

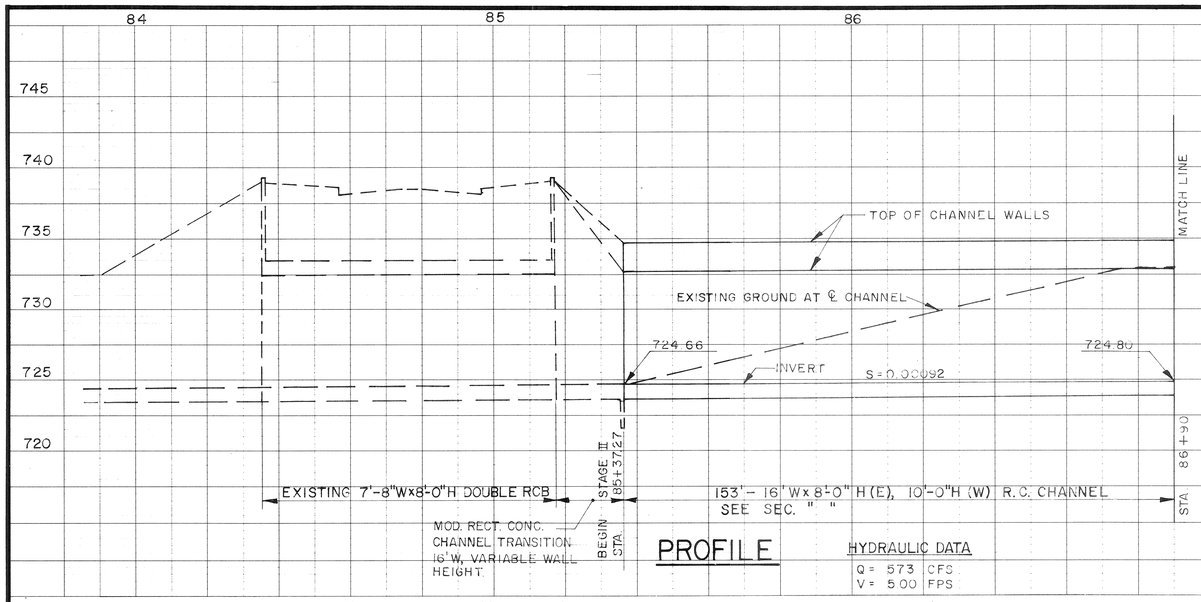

PROFILE

HYDRAULIC DATA

Q = 573 CFS
V = 5.00 FPS

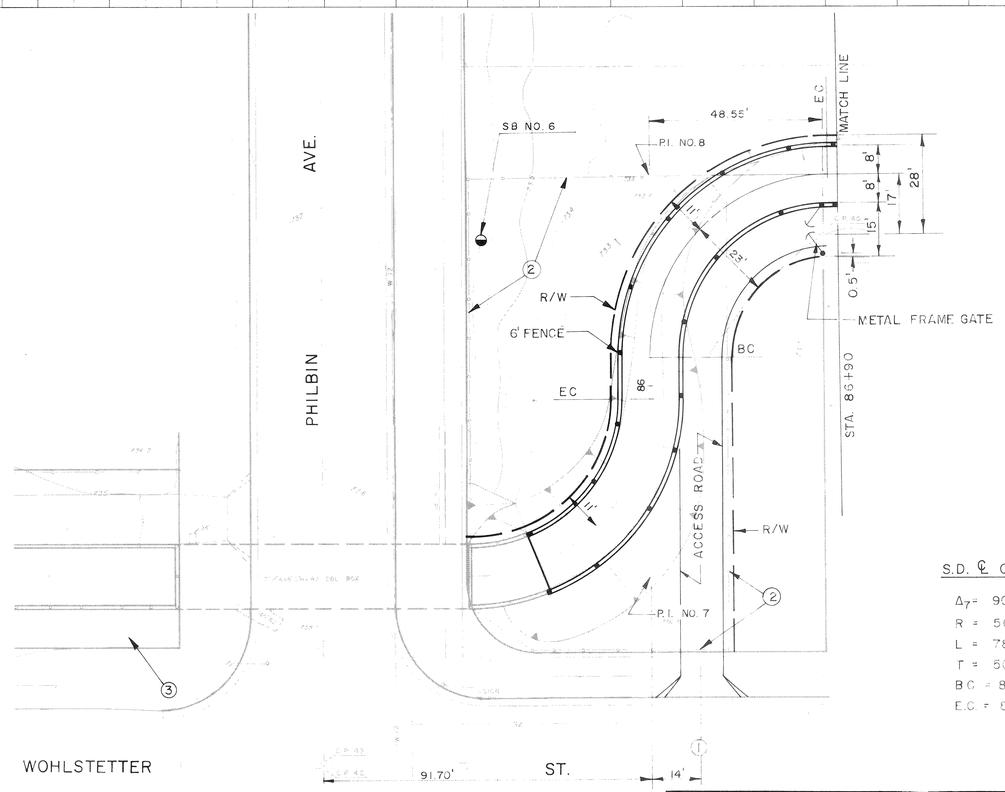

PLAN

1" = 20'

20' 0 20'

① CONSTRUCT 12' COMMERCIAL DRIVEWAY PER CITY OF RIVERSIDE STANDARD DRAWING NO. 302, TYPE IV, A = 12', B = 26'

② REMOVE EXISTING CHAIN LINK FENCE.

③ FOR LANDSCAPING AND IRRIGATION SYSTEM SEE SHEETS 33 AND 34

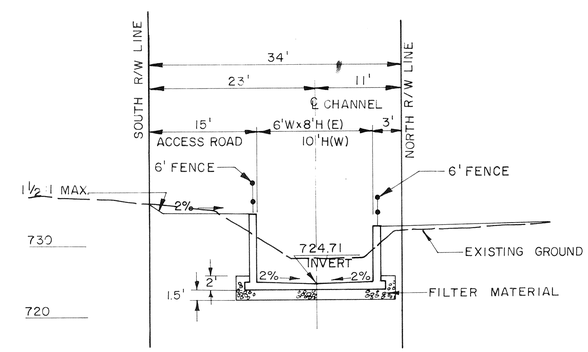

SECTION AT STA. 86+00

10' 0 10'

S.D. ℄ CURVE DATA

Δ_7 = 90° 00' 56"
R = 50'
L = 78.55'
T = 50.01'
B.C. = 85+17.96
E.C. = 85+96.51

S.D. ℄ CURVE DATA

Δ_8 = 90° 00' 22"
R = 50'
L = 78.55'
T = 50.01'
B.C. = 86+07.88
E.C. = 86+86.43

BENCH MARK C.P. 42
BRASS DISK 0.16 DOWN AT INTERSECTION OF WOHLSTETTER AND PHILBIN NORTH. EL. 737.429

SCALE:

DATE:

ALDERMAN SWIFT & LEWIS CONSULTING ENGINEERS

APPROVED BY

DATE

REGISTERED CIVIL ENGINEER NO. 11543

REVISIONS			
REF.	DESCRIPTION	APPR.	DATE

RIVERSIDE COUNTY FLOOD CONTROL AND WATER CONSERVATION DISTRICT

DESIGNED BY: A.G.K.
DRAWN BY: S. Morris
DATE DRAWN:
CHECKED BY:

APPROVED BY:

CHIEF ENGINEER R.E. NO. 8822

DATE:

ANZA CHANNEL
STAGE II

STA. 85+37.27 TO STA. 86+90

1970 STORM DRAIN BOND ISSUE PROJECT NO. 18

PROJECT NO. 1-0-150

DRAWING NO. 1-319

SHEET NO. 2 OF

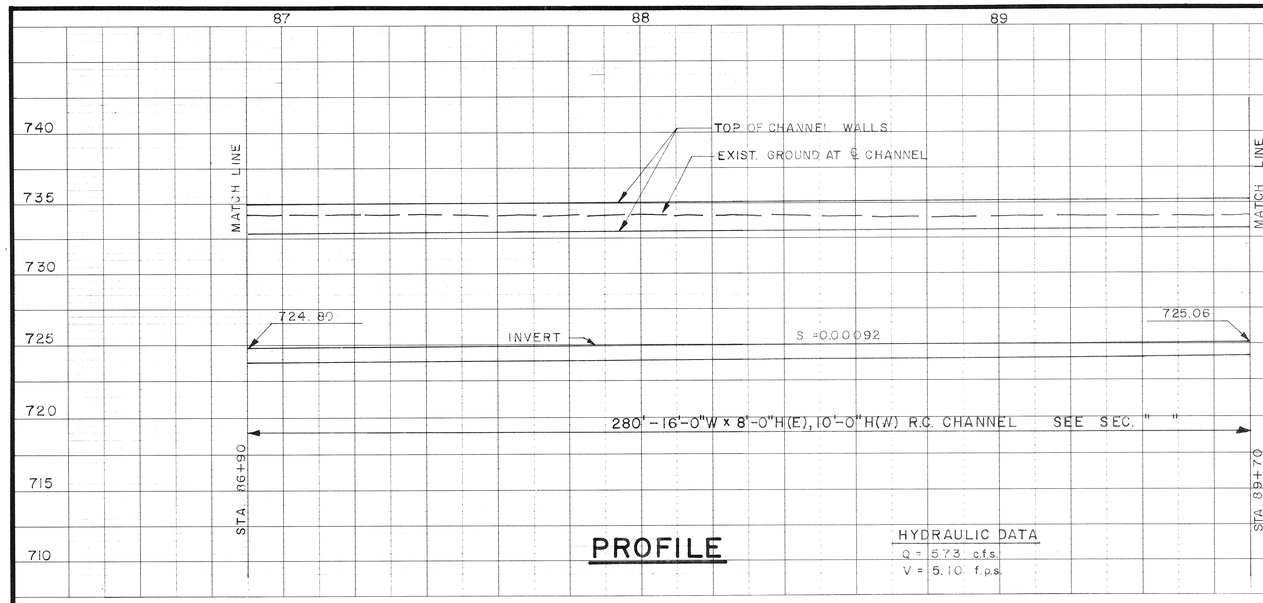

PROFILE

NOTE: CONTRACTOR SHALL PROTECT IN PLACE ALL UTILITIES CROSSING OR PARALLELING THE STORM DRAIN, UNLESS OTHERWISE NOTED.

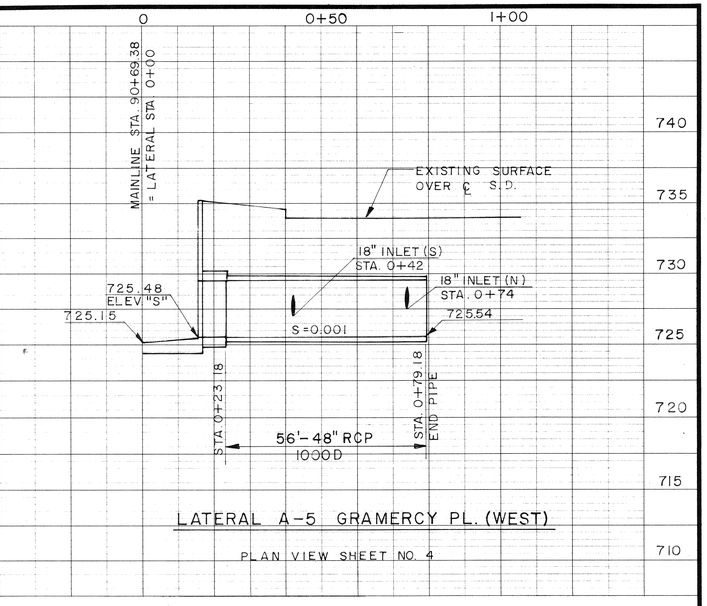

LATERAL A-5 GRAMERCY PL. (WEST)

PLAN VIEW SHEET NO. 4

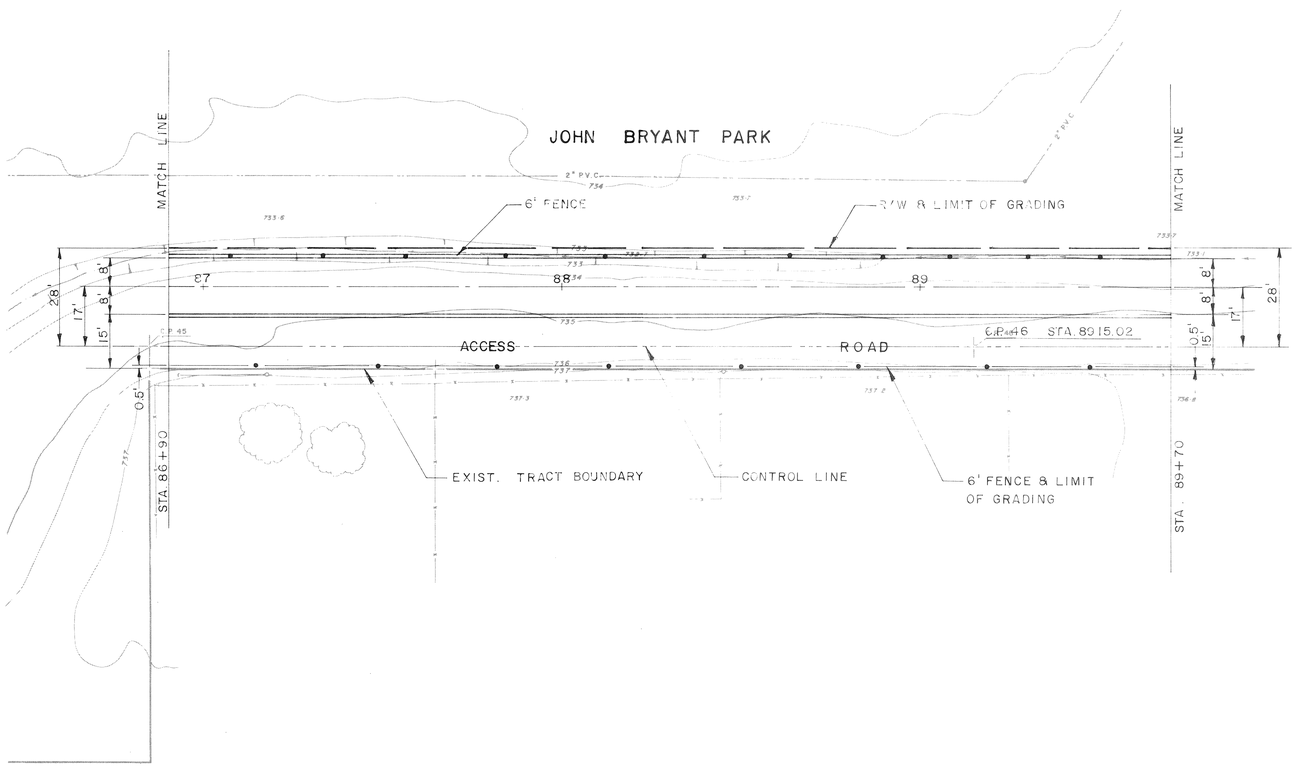

PLAN

1"=20'

20' 0 20'

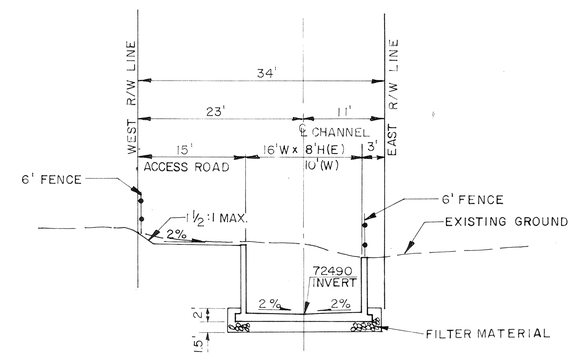

SECTION AT STA. 88+00

10' 0 10'

BENCH MARK C.P. 45
3/4" I.P. ON A LINE OFFSET 6' EASTERLY FROM TRACT BOUNDARY
ELEV. 734.782

SCALE:

DATE:

ALDERMAN SWIFT & LEWIS CONSULTING ENGINEERS

REGISTERED CIVIL ENGINEER NO. 11543

APPROVED BY

DATE

REVISIONS			
REF.	DESCRIPTION	APPR.	DATE

RIVERSIDE COUNTY FLOOD CONTROL AND WATER CONSERVATION DISTRICT

DESIGNED BY:
DRAWN BY:
DATE DRAWN:
CHECKED BY:

APPROVED BY:

CHIEF ENGINEER R.E. NO. 8822

DATE:

ANZA CHANNEL
STAGE II
STA. 86+90 TO STA. 89+70
1970 STORM DRAIN BOND ISSUE PROJECT NO. 18

PROJECT NO. 1-0-150
DRAWING NO. 1-319
SHEET NO. 3 OF

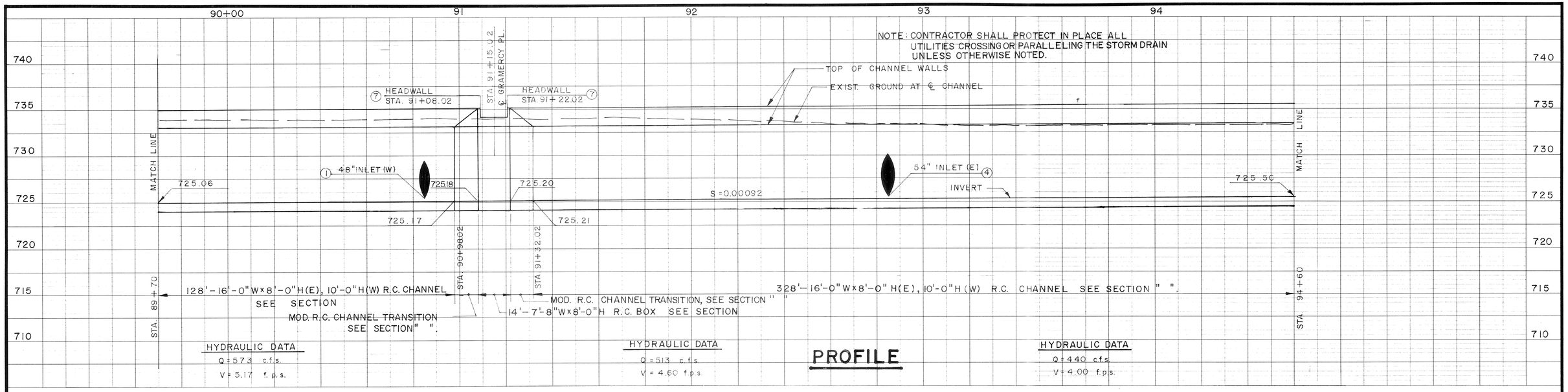

PROFILE

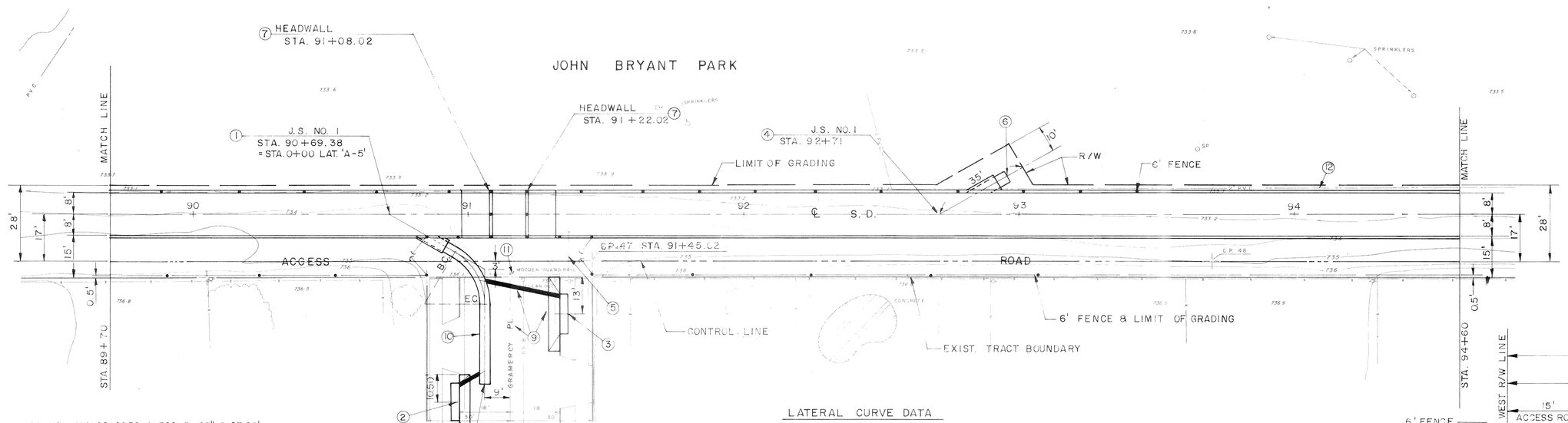

LATERAL CURVE DATA

Δ = 59° 59' 48"
R = 22.50'
L = 23.56'
T = 12.99'
BC = 0+27.01
EC = 0+50.57

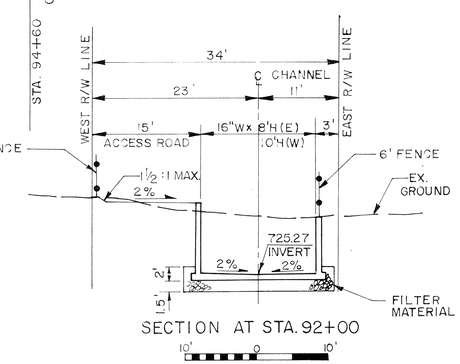

SECTION AT STA. 92+00

1. J.S. NO. 1, STA. 90+69.38, A=30°, R=48", C=23.60', ELEV. "R"=725.49, ELEV. "S"=725.48.
2. C.B. NO. 1, (W=14'), V=4.0', L.D. NO. 2, 8'-18" R.C.P., CL. IV. FOR PROFILE SEE SHEET NO. 27.
3. C.B. NO. 1, (W=14'), V=4.0', L.D. NO. 2, CASE "C", 28'-18" R.C.P. CL. IV, FOR PROFILE SEE SHEET NO. 27.
4. J.S. NO. 1, STA. 92+71, A = 30°, B=54", C=24.20', ELEV. "R"=725.67, ELEV. "S"=725.56.
5. TO BE RELOCATED BY OTHERS PRIOR TO CONSTRUCTION.
6. 4'-54" R.C.P., 1200 D, ELEV. AT END 725.68, SEAL END WITH 8" BRICK & MORTAR.
7. HEADWALL, H=1', SEE DETAIL ON SHEET NO. 25
8. SEAL END WITH CONCRETE BULKHEAD.
9. FOR STREET RECONSTRUCTION SEE SHEET NO. 30.
10. PROFILE VIEW SHEET NO. 3.
11. REMOVE WOODEN GUARD RAIL.
12. REMOVE AND REPLACE INTERFERING PORTION OF 2" PVC.

PLAN

1" = 20'

20' 0 20'

BENCH MARK C.P. 47
3¼" I.P. ON A LINE OFFSET 6' FROM TRACT BOUNDARY AT THE SOUTHERLY SIDE OF GRAMERCY PLACE. ELEV. 734.59

SCALE:

DATE:

ALDERMAN SWIFT & LEWIS CONSULTING ENGINEERS

APPROVED BY

DATE

REGISTERED CIVIL ENGINEER NO. 11543

REVISIONS			
REF.	DESCRIPTION	APPR.	DATE

RIVERSIDE COUNTY FLOOD CONTROL AND WATER CONSERVATION DISTRICT

DESIGNED BY:
DRAWN BY: L. Moody
DATE DRAWN:
CHECKED BY:

APPROVED BY:
CHIEF ENGINEER R.E. NO. 8822
DATE:

ANZA CHANNEL
STAGE II
STA. 89+70 TO STA. 94+60
1970 STORM DRAIN BOND ISSUE PROJECT NO. 18

PROJECT NO. 1-0-150
DRAWING NO. 1-319
SHEET NO. 4 OF

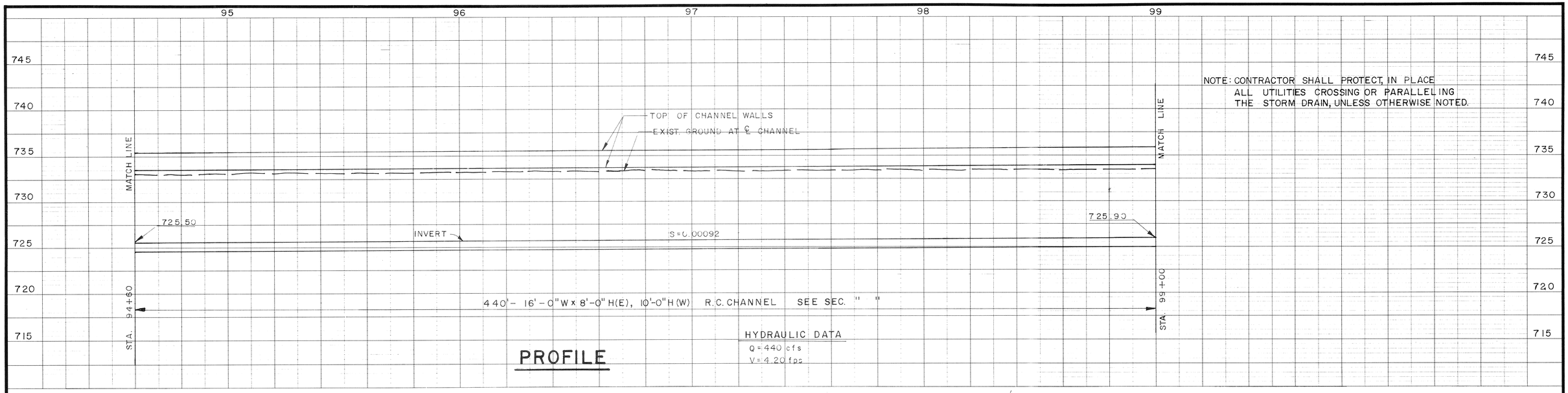

JOHN BRYANT PARK

S.D. ℄ CURVE DATA

Δ_3 = 69° 32' 30"
R = 100'
L = 121.37'
T = 69.43'
B.C. = 97+39.52
E.C. = 98+60.89

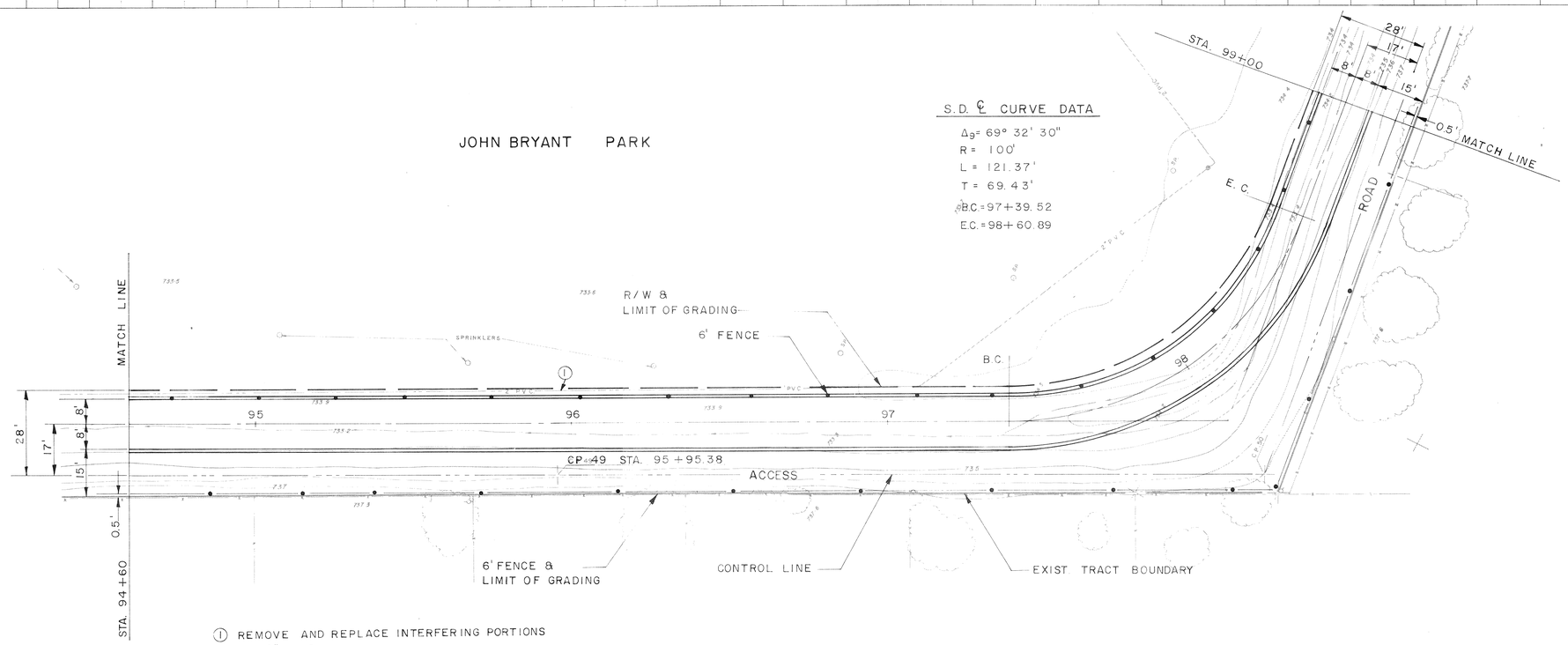

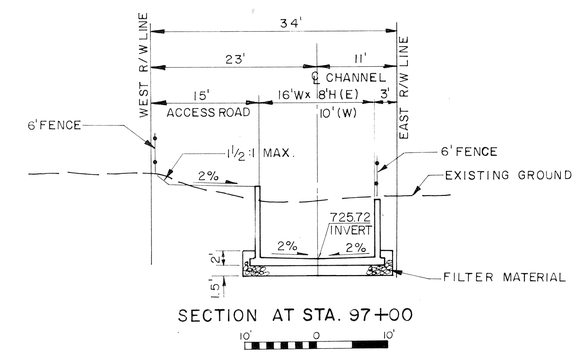

PLAN

1" = 20'

20' 0 20'

BENCH MARK C.P. 50
3/4" I.P. ON A LINE OFFSET 6' FROM TRACT BOUNDARY LINE
ELEV. 736.172

SCALE:

DATE:

ALDERMAN SWIFT & LEWIS CONSULTING ENGINEERS

APPROVED BY

DATE

REGISTERED CIVIL ENGINEER NO. 11543

REVISIONS			
REF.	DESCRIPTION	APPR.	DATE

RIVERSIDE COUNTY FLOOD CONTROL AND WATER CONSERVATION DISTRICT

DESIGNED BY:
DRAWN BY: S. Moody
DATE DRAWN:
CHECKED BY:

APPROVED BY:

CHIEF ENGINEER R.E. NO. 8822

DATE:

ANZA CHANNEL
STAGE II
STA. 94+60 TO STA. 99+00
1970 STORM DRAIN BOND ISSUE PROJECT NO. 18

PROJECT NO. 1-0-150
DRAWING NO. 1-319
SHEET NO. 5 OF

NOTE: CONTRACTOR SHALL PROTECT IN PLACE ALL UTILITIES CROSSING OR PARALLELING THE STORM DRAIN UNLESS OTHERWISE NOTED.

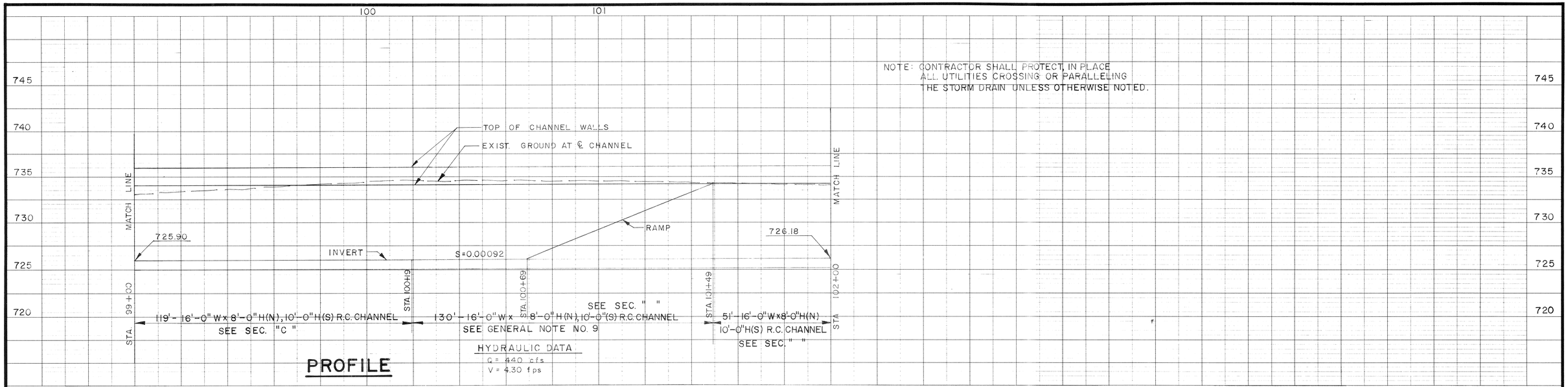

PROFILE

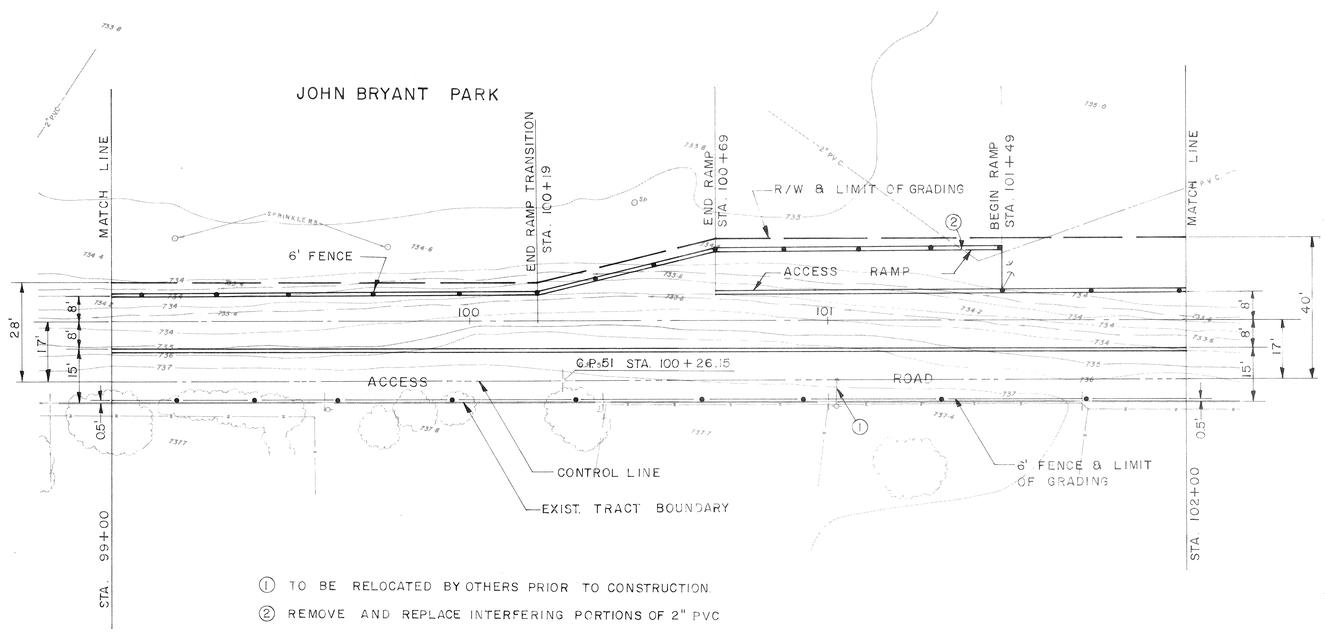

① TO BE RELOCATED BY OTHERS PRIOR TO CONSTRUCTION.

② REMOVE AND REPLACE INTERFERING PORTIONS OF 2" PVC

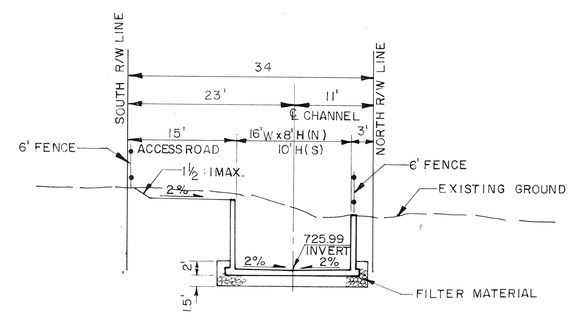

SECTION AT STA. 100+00

10' 0 10'

PLAN

1" = 20'

20' 0 20'

BENCH MARK CP. 51 3/4" I.P. ON A LINE OFFSET 6' FROM TRACT BOUNDARY ELEV. 737.306	ALDERMAN SWIFT & LEWIS CONSULTING ENGINEERS	APPROVED BY DATE	REVISIONS REF. DESCRIPTION APPR. DATE
SCALE: DATE:		REGISTERED CIVIL ENGINEER NO. 11543	

RIVERSIDE COUNTY FLOOD CONTROL AND WATER CONSERVATION DISTRICT	
DESIGNED BY: DRAWN BY: S. Moody DATE DRAWN: CHECKED BY:	APPROVED BY: CHIEF ENGINEER R.E. NO. 8822 DATE:

ANZA CHANNEL
STAGE II
STA. 99+00 TO STA. 102+00
1970 STORM DRAIN BOND ISSUE PROJECT NO. 18

PROJECT NO. 1-0-150
DRAWING NO. 1-319
SHEET NO. 6 OF

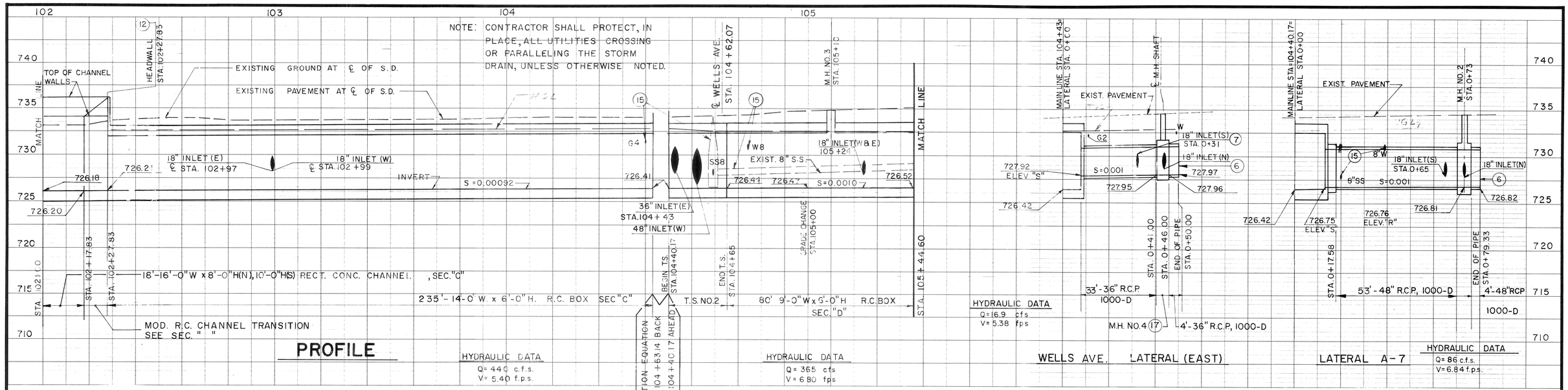

S.D. ℄ CURVE DATA

Δ_{10} = 99° 06' 51"
R = 45'
L = 77.84'
T = 52.80'
B.C. = 102+28.83
E.C. = 103+06.67

S.D. ℄ CURVE DATA, LATERAL "A-7"

Δ = 62° 24' 46"
R = 45'
L = 49.02
T = 27.26
B.C. = 0+20
E.C. = 0+69.02

1. C.B. NO. 1, W = 7', V = 4.0'
   L.D. NO. 2, 8'-18" R.C.P. CL. IV
   SEE PROFILE ON SHEET NO. 25.
2. STA. 104+43 ℄ 36" LATERAL. SEE PROFILE ON THIS SHEET.
3. C.B. NO. 1, W = 7', V = 4.0'
   L.D. NO. 2, 18'-18" R.C.P. CL. IV
   SEE PROFILE ON SHEET NO. 25.
4. J.S. NO. 1, STA. 104+40.17, A = 30°
   B = 48", C = 18.0', ELEV. "R" = 726.76
   ELEV. "S" = 726.75
5. C.B. NO. 1, W = 14', V = 5.5'
   L.D. NO. 2, 14'-18" R.C.P. CL. IV
   SEE PROFILE ON SHEET NO. 27.
6. SEAL END OF PIPE WITH CONC. BULKHEAD.
7. J.S. NO. 2, STA. 0+31, A = 75°, B = 18",
   C = 2.5', D = 36", E = 4.4', F = 0.7', G = 0.5'
   L = 5.0', ELEV. "S" = 728.69, ELEV. "R" = 728.71
8. C.B. NO. 1, W = 14', V = 4.0'; L.D. NO. 2,
   53'-18" R.C.P. CL. IV
   SEE PROFILE ON SHEET NO. 27.
9. C.B. NO. 1, W = 7', V = 5.0'
   L.D. NO. 2, 9'-18" R.C.P. CL. IV.
   SEE PROFILE ON SHEET NO. 25.
10. C.B. NO. 1, W = 7', V = 4.5'
    L.D. NO. 2, 19'-18" R.C.P. CL. IV.
    SEE PROFILE ON SHEET NO. 25.
11. C.B. NO. 1, W = 14', V = 4.0'
    L.D. NO. 2, 12'-18" R.C.P. CL. IV.
    SEE PROFILE ON SHEET NO. 27.
12. HEADWALL, H = 3', SEE DETAIL SHEET NO. 25.
13. ℄ 48" RCP LATERAL "A-7" OF MONROE AREA DRAINAGE PLAN. SEE PROFILE ON THIS SHEET.
14. C.B. NO. 1, W = 14', V = 4.0'
    L.D. NO. 2, 52'-18" R.C.P. CL. IV
    SEE PROFILE ON SHEET NO. 27.
15. TO BE RELOCATED BY OTHERS.
16. REMOVE GUARD RAIL.
17. M.H. NO. 4 DATA A = 50°, B = 18",
    C = 5.0', $D_1 = D_2 = 36"$
    ELEV. "S" = 728.70 ELEV. "R" = 728.86

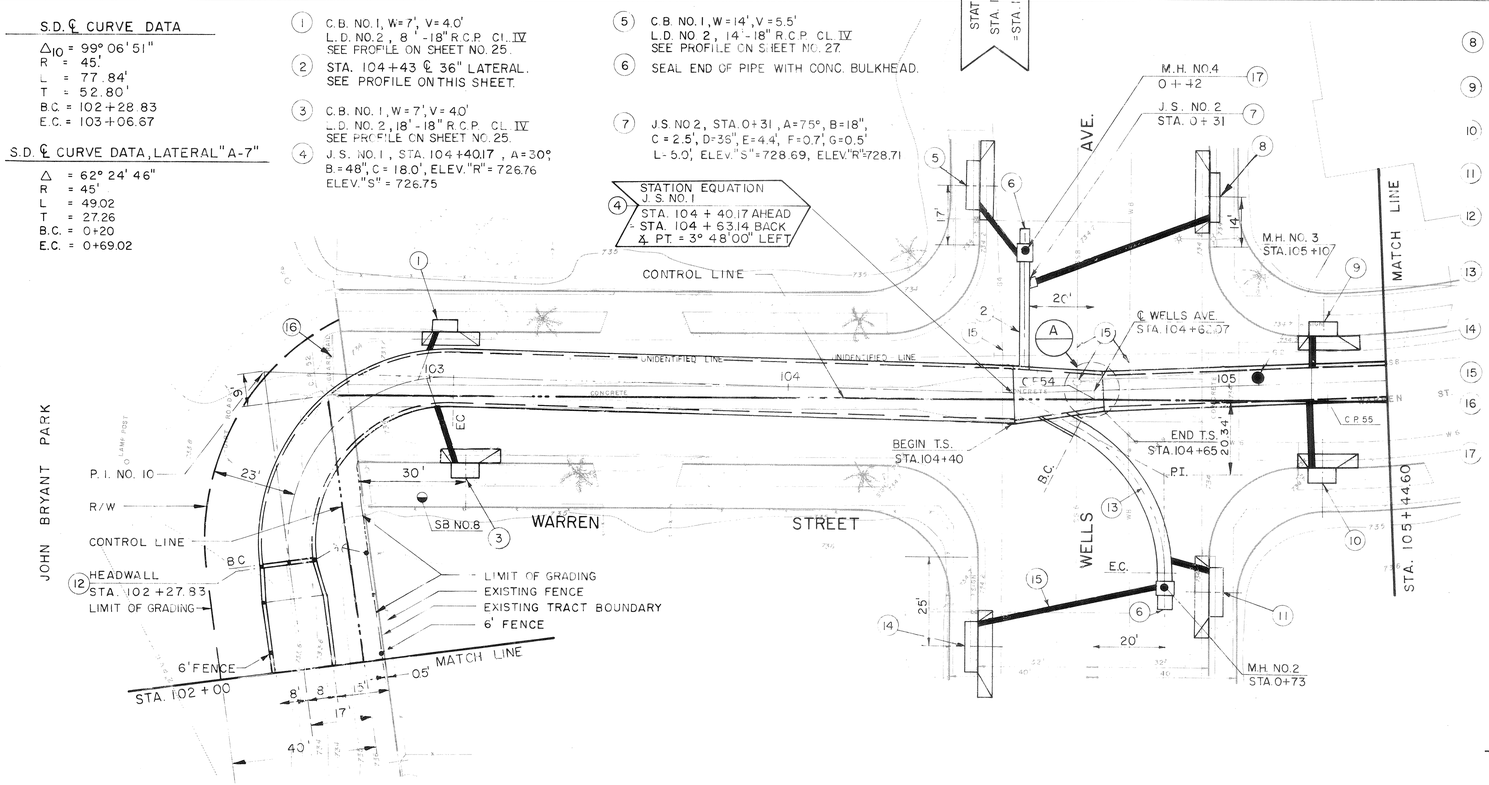

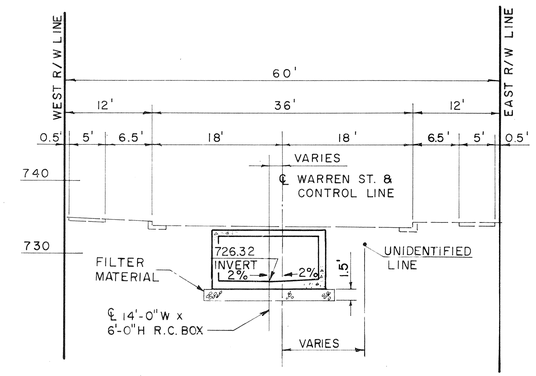

SECTION AT STA. 103+56

10' 0 10'

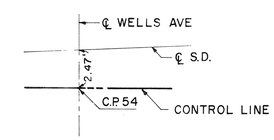

TIE DETAIL (A)
NO SCALE

PLAN
1" = 20'
20' 0 20'

BENCH MARK C.P. NO. 52 ¾" I.P. ON THE ℄ OF WARREN STREET 6' N'LY OF TRACT BOUNDARY — ELEV. 733.787	ALDERMAN SWIFT & LEWIS CONSULTING ENGINEERS	APPROVED BY	REVISIONS
SCALE:		DATE	REF. / DESCRIPTION / APPR. / DATE
DATE:		REGISTERED CIVIL ENGINEER NO. 11543	

RIVERSIDE COUNTY FLOOD CONTROL AND WATER CONSERVATION DISTRICT

DESIGNED BY: K.E.K.
DRAWN BY: R. D.F.
DATE DRAWN: OCT 1973
CHECKED BY: R.D.C. — G.L.H.
APPROVED BY:
CHIEF ENGINEER R.E. NO. 8822
DATE:

ANZA CHANNEL
STAGE II
STA. 102+00 TO STA. 105+44.60
1970 STORM DRAIN BOND ISSUE PROJECT NO. 18

PROJECT NO. 1-0-150
DRAWING NO. 1-319
SHEET NO. 7 OF

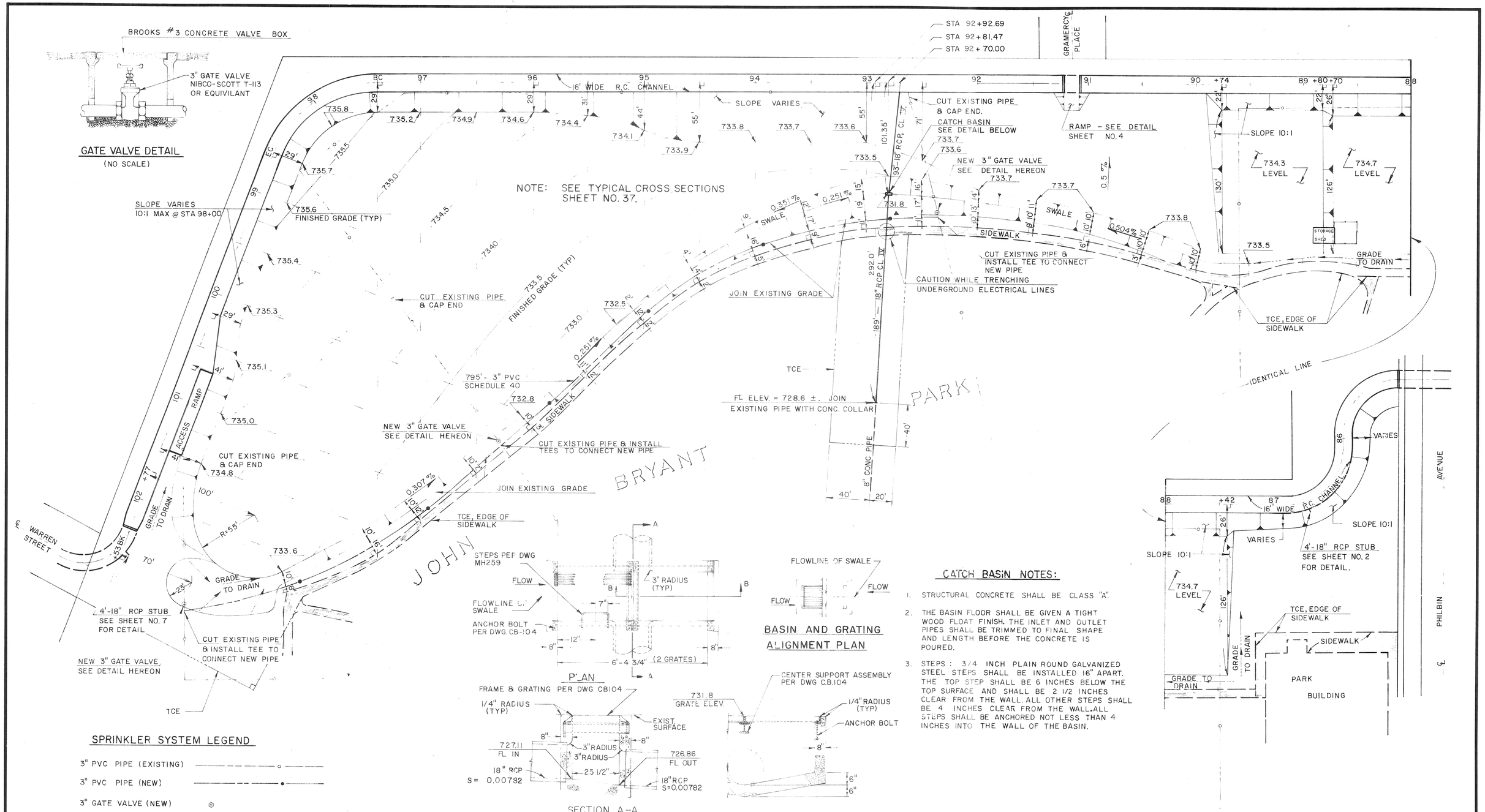

CATCH BASIN NOTES:

1. STRUCTURAL CONCRETE SHALL BE CLASS "A".
2. THE BASIN FLOOR SHALL BE GIVEN A TIGHT WOOD FLOAT FINISH. THE INLET AND OUTLET PIPES SHALL BE TRIMMED TO FINAL SHAPE AND LENGTH BEFORE THE CONCRETE IS POURED.
3. STEPS: 3/4 INCH PLAIN ROUND GALVANIZED STEEL STEPS SHALL BE INSTALLED 16" APART. THE TOP STEP SHALL BE 6 INCHES BELOW THE TOP SURFACE AND SHALL BE 2 1/2 INCHES CLEAR FROM THE WALL. ALL OTHER STEPS SHALL BE 4 INCHES CLEAR FROM THE WALL. ALL STEPS SHALL BE ANCHORED NOT LESS THAN 4 INCHES INTO THE WALL OF THE BASIN.

EXHIBIT A

CITY OF RIVERSIDE, CALIFORNIA PARK AND RECREATION DEPARTMENT APPROVED BY Elgin M. Brown 2/25/76 PARK AND RECREATION DIRECTOR DATE	REVISIONS No Changes REF. DESCRIPTION APPR. DATE	RIVERSIDE COUNTY FLOOD CONTROL AND WATER CONSERVATION DISTRICT DESIGNED BY: A.G.K. DRAWN BY: L.J.C. DATE DRAWN: 12-30-75 CHECKED BY: APPROVED BY: John W. Bryant CHIEF ENGINEER R.E. NO. 8822 DATE: 2-25-76	ANZA CHANNEL STAGE II JOHN BRYANT PARK DETAILS 1970 STORM DRAIN BOND ISSUE PROJECT NO. 18	PROJECT NO. 1-0-150 DRAWING NO. 1-319 SHEET NO. 36 OF 81

AS BUILT