DRAWING NUMBER
PLAN HOLD CORPORATION • IRVINE, CALIFORNIA
REORDER BY NUMBER 075AR
DRAWING NUMBER BP4
PLAN HOLD CORPORATION • IRVINE, CALIFORNIA
REORDER BY NUMBER 075AR
DRAWING NUMBER
PLAN HOLD CORPORATION • IRVINE, CALIFORNIA
REORDER BY NUMBER 075AR
DRAWING NUMBER
PLAN HOLD CORPORATION • IRVINE, CALIFORNIA
REORDER BY NUMBER 075AR
DRAWING NUMBER
PLAN HOLD CORPORATION • IRVINE, CALIFORNIA
REORDER BY NUMBER 075AR
DRAWING NUM BR 84
PLAN HOLD CORPORATION • IRVI
REORDER BY NUMBER 075AR

GENERAL NOTES

1. TEMPERATURE SHALL BE CAPABLE OF BEING SET FROM 55 DEG. TO 85 DEG. F. AND HAVE THE ABILITY TO OPERATE THE HEATING AND COOLING IN SEQUENCE, IF BOTH ARE PROVIDED. CONTROL SHALL BE ADJUSTABLE TO PROVIDE A RANGE OF UP TO 10 DEG. F. BETWEEN FULL HEATING AND FULL COOLING, AND HAVE CAPABILITY OF TERMINATING ALL HEATING AT A TEMPERATURE NO MORE THAN 70 DEG. F. AND COOLING AT A TEMPERATURE NOT LESS THAN 78 DEG.F.
2. EACH HVAC SYSTEM SHALL HAVE A DEVISE TO SHUT-OFF OR SET-BACK EACH SYSTEM DURING OFF HOURS. SET T-STAT TO PURGE SUITE ONE HOUR BEFORE OCCUPANCY.
3. EACH HVAC SYSTEM MUST BE CAPABLE OF SUPPLYING MINIMUM LEVELS OF OUTDOOR AIR PER ASHRAE STANDARDS 62-1981 TABLE 3 SECTION 6.1. SMOKING AREAS 20 CFM PER PERSON, NON-SMOKING AREA 15 CFM PER PERSON, UBC MIN. 15 CFM PER PERSON OF O.S.A.
4. ALL INSULATING MATERIALS SHALL BE INSTALLED IN COMPLIANCE WITH THE FLAMESPREAD RATING AND SMOKE DENSITY REQUIREMENTS OF SECTION 604 OF THE UMC.
5. ALL PIPING SHALL BE INSULATED IN ACCORDANCE WITH CEC TABLE 2-53E.
6. TRANSVERSE JOINTS SHALL BE SEALED WITH APPROVED MASTIC OR TAPE. UMC 601.6
7. INSTALLATION OF DUCTS UMC 603
8. INSULATION OF DUCTS UMC TABLE No. 6-D THERMAL WRAP MIN. INSTALLED 1-1/2" THICK. FIBERGLASS WITH ALUMINUM FOIL SCRIM KRAFT FACING 1 LB/CUFT. INSTALLED TO MEET FLAME SPREAD, SMOKE DENSITY REQUIREMENTS.
9. ALL HEATING & COOLING EQUIPMENT SHALL BE LISTED BY THE CEC.
10. ALL HEATING & COOLING EQUIPMENT SHALL MEET OR EXCEED THE EQUIPMENT EFFICIENCY.
11. GAS APPLIANCES SHALL HAVE PILOTLESS IGNITION.
12. DAMPER WHICH WILL AUTOMATICALLY CLOSE ON FAN SHUT DOWN WILL BE PROVIDED FOR EACH EXHAUST FAN.
13. WATER HEATERS OF DOMESTIC & POOL HEATERS SHALL BE C.E.C. APPROVED.
14. MAINTENANCE LABELS WILL BE AFFIXED TO MECHANICAL EQUIPMENT AND A MAINTENANCE MANUAL SHALL BE PROVIDED FOR THE OWNERS USE.
15. WORK SHALL CONFORM TO LOCAL CODES & REQUIREMENTS, LATEST EDITION OF THE UBC, LATEST EDITION OF THE UMC & LATEST EDITION OF UPC.
16. VERIFY ALL DIMENSIONS IN THE FIELD, NO EXCEPTION. PLANS ARE SCHEMATIC. FIELD VERIFY ALL CONDITIONS.
17. TO ACCOMMODATE SPACE, DUCT MAY REQUIRE REROUTING OR CHANGED FROM ROUND TO RECTANGLE AND FROM RECTANGLE TO ROUND WITH PROPER SIZING AND PROPER FITTINGS. WEATHER EXPOSED ROOF MOUNTED DUCT TO REMAIN RECTANGLE. VERIFY WITH SPECIFICATIONS.
18. HVAC CONTRACTOR SHALL TEST & BALANCE THE AIR DISTRIBUTION SYSTEM. OUTSIDE AIR CERTIFICATION SHALL BE PROVIDED.
19. HVAC CONTRACTOR IS RESPONSIBLE FOR MEETING ALL CONDITIONS OF THE CEC MANDATORY MEASURES THAT ARE APPLICABLE TO HIS SCOPE OF WORK.
20. CONDENSATE DRAINS TO BE RUN TO APPROPRIATE RECEPTACLE. UMC 309. ATTIC MOUNT HVAC OVER FLOW PAN DRAIN TO BE RUN TO A READILY OBSERVED LOCATION UMC 1105.12
21. FLEXIBLE DUCTWORK MAY BE USED THE LAST 7 FEET TO CONNECT TO REGISTERS AND GRILLES. VERIFY WITH SPECIFICATIONS.
22. GRILLES AND REGISTARS TO BE METAL-AIRE OR EQUAL SUPPLY REGISTERS TO HAVE OPPOSED BLADE DAMPERS.
23. PROVIDE COMBUSTION AIR PER UMC CHAPTER 7 1997 EDITION. ONE SQUARE INCH FOR EVERY 1,000 BTUS. HIGH AND LOW COMBUSTION AIR CONDITIONS MUST BE MET.
24. ALL EQUIPMENT THAT IS SUBSTITUTED SHALL FIT IN THE SPACE PROVIDED WITH ADEQUATE ROOM FOR SERVICING, INCLUDING SUBSTITUTE EQUIPMENT NAMED IN THIS SECTION OF THE SPECIFI-CATIONS.
25. ALL SHEET METAL CONSTRUCTION AND GAGES SHALL BE INSTALLED IN ACCORDANCE WITH LOCAL AND ASHRAE CODES. TAPE ALL TRANSVERSE AND LONGITUDINAL JOINTS, SUPPLY AND RETURN DUCTS. TAPE MUST BE UL 181B LISTED TAPE.
26. WHERE INTERIOR OF DUCTWORK IS VISIBLE THRU AN AIR OUTLET, INSIDE OF DUCT SHALL BE PAINTED WITH A FLAT BLACK PRIMER, OR LINING SHALL HAVE BLACK FACING.
27. ALL MATERIALS AND EQUIPMENT PROVIDED AND/OR INSTALLED SHALL BE GUARANTEED FOR A PERIOD OF ONE (1) YEAR FROM THE DATE OF FINAL ACCEPTANCE OF THE WORK BY THE OWNER. ANY DEFECTIVE MATERIALS OR INFERIOR WORKMANSHIP SHALL BE CORRECTED TO THE ENTIRE SATISFACTION OF THE OWNER.
28. WITHIN 14 DAYS AFTER AWARD OF CONTRACT SUBMIT FIVE (5) COPIES OF REQUIRED SHOP DRAWINGS, MATERIAL LISTS, AND EQUIPMENT SPECIFICATIONS OF ITEMS PROPOSED FOR INSTALLATIONS.
29. GENERAL CONTRACTOR: CURBING, LEVEL PLATFORMS, FRAMED OPENING, DOOR LOUVERS, (DL), UNDERCUT DOORS (UC), EXTERIOR LOUVERS, SHALL BE PROVIDED BY THE GENERAL CONTRACTOR.
30. WHERE MULTIPLE HVAC SYSTEMS ARE PROVIDED, EACH SYSTEM SHALL BE PERMANENTLY IDENTIFIED AS TO THE AREA IT SERVES. UMC SEC. 310.3
31. PROVIDE 120 VOLT OUTLET WITHIN 25 FEET OF HVAC EQUIPMENT. UMC SEC. 306.3
32. EQUIPMENT REQUIRING ELECTRICAL CONNECTIONS OF MORE THAN 50 VOLTS SHALL HAVE A POSITIVE MEANS OF DISCONNECT ADJACENT TO AND IN SIGHT FROM THE EQUIPMENT SERVED. UMC 306.2
33. ALL THERMOSTATS, SWITCHES, AND CONTROLLERS SHALL BE LOCATED 48" MAX. ABOVE THE FINISH FLOOR.
34. SMOKE AND FIRE RATED DAMPER ARE REQUIRED ON ALL DUCTS PENETRATING OCCUPANCY SEPARTION WALLS, RATED CORRIDOR'FOYER WALLS, AND FIRE RATED CEILINGS. UBC 713.
35. MATERIALS EXPOSED WITHIN DUCTS OR PLENUMS SHALL HAVE A FLAME-SPREAD INDEX OF NOT MORE THAN 25 AND A SMOKE-DEVELOPED RATING OF NOT MORE THAN 50 WHEN TESTED IN ACCORDANCE WITH UBC STANDARD 8-1.
36. EACH SINGLE SYSTEM PROVIDING HEATING OR COOLING AIR IN EXCESS OF 2000 CFM SHALL BE EQUIPPED WITH AN AUTOMATIC SHUTOFF. AUTOMATIC SHUTOFFS SHALL SHUT DOWN THE AIR-MOVING EQUIPMENT WHEN SMOKE IS DETECTED IN THE MAIN SUPPLY-AIR DUCT. SMOKE DETECTION REQUIRED BY UMC SEC. 608 SHALL BE BY SMOKE DETECTOR INSTALLED IN THE MAIN SUPPLY-AIR DUCT. ACTIVATION OF ANY DECTOR SHALL CAUSE THE AIR-MOVING EQUIPMENT TO AUTOMATICALLY SHUT DOWN.
37. APPLIANCES DESIGNED TO BE FIXED IN POSITION SHALL BE SECURELY FASTENED IN PLACE PER BUILDING CODE REQUIREMENTS.
38. ALL APPLIANCES AND PLUMBING VENTS AND THE DISCHARGE OUTLET OF EXHAUST FANS SHALL BE AT LEAST TEN (10) FEET IN THE HORIZONTAL DIRECTION, OR THREE (3) FEET ABOVE THE OUTSIDE-AIR INTAKES FOR THE HVAC UNITS.
39. ALL COMBINATION FIRE/SMOKE DAMPERS (FSD) TO BE RUSKIN MODEL FSD60-3 UL555 RATED, UL555 UL555 LEAKAGE CLASS 1. CALIF. STATE FIRE MARSHAL FIRE DAMPER LISTING #3225-245-102 SMOKE DAMPER LISTING #3230-245-110. OPTIONS AS REQUIRED: TS-150 FIRESTAT, DUCT SMOKE DETECTOR, SP100 SWITCH PACKAGE, PICTURE FRAME MOUNTING FRAMES, SLEEVES, ACCESS DOORS SMOKE MANAGEMENT CONTROL PANEL, FIRESTOP CAULK INSTALLATION.
40. AIR PRODUCTS AND CONTROLS INC. SM-501 SERIES DUCT SMOKE DETECTORS. FIELD VERIFY VOLTAGE REQUIREMENTS. U.L. APPROVED, CALIF. STATE FIRE MARSHAL APPROVED AND MEA LISTED.

STANDARD CONSTRUCTION NOTES:

ALL NEW CONSTRUCTION SHALL MEET THE MINIMUM REQUIREMENTS OF THE
UNIFORM BUILDING CODE - 1997 EDITION:
UNIFORM PLUMBING CODE - 1997 EDITION:
UNIFORM MECHANICAL CODE - 1997 EDITION:
NATIONAL ELECTRIC CODE - 1998 EDITION:
NFPA 99 HEALTH CARE FACILITIES 1999 EDITION
THE CALIFORNIA BUILDING CODE - 1998 EDITION:
THESE CODES MAY BE AMENDED BY THE GOVERNING JURISDICTION'S CODE.
IF CONTRADICTIONS ARISE IN THESE PLANS FROM THE PROVISIONS OF THE "CODES" THE MOST RESTRICTIVE PROVISIONS WILL GOVERN.

H.V.A.C. EQUIPMENT SCHEDULE

SYM	MANUFACTURER MODEL #	COOLING CAP. @ ARI STD	EER	HEATING CAPACITY INPUT	HEATING CAPACITY OUTPUT	AFUE / CFM	ESP	BHP	VOLT	PH	MCA	FLA	MCOP	WT.	OSA	ECONO-MIZER
AC 1	CARRIER 48HJD008-6	74,000	---	125,000	102,500	--- / 3000			EXISTING	UNIT					SEE PLAN	YES
AC 2	CARRIER 48GXN036090501	36,000	---	88,000	70,800	--- / 1200			EXISTING	UNIT					SEE PLAN	YES
AC 3	CARRIER 48TJD014	140,000	---	224,000	183,700	--- / 5000			EXISTING	UNIT					SEE PLAN	YES
AC 4	CARRIER 48TJD014	140,000	---	224,000	183,700	--- / 5000			EXISTING	UNIT					SEE PLAN	YES
2 AC 2	CARRIER 48TFL006-501 ALTERNATE	57,000	11.0	60,000	48,000	80% / 2000	0.4	1.04	208	3	27.3	23.9	35	667	SEE PLAN	YES

REMARKS/ACCESS.
RELOCATE EXISTING T-STATS PER OWNER'S RECOMMENDATIONS.
VERIFY ALL CONTROL REQUIREMENTS WITH MANUFACTURER.
RUN CONDENSATE DRAIN TO PROPER RECEPT. OVERFLOWS TO VISIBLE LOCATION.
UPON COMPLETION OF WORK , SERVICE ALL UNITS, PROVIDE A CLEAN SET OF FILTERS PLUS ONE SET OF FILTERS FOR THE OWNER.

2 EXISTING AC-2 PROVIDE NEW GAS LINE
ALTERNATE AC-2 PROVIDE NEW GAS LINE, CONNECT CONDENSATE DRAIN.
ALTERNATE AC-2 PROVIDE NEW ROOF CURB

AIR DISTRIBUTION SCHEDULE

SYM	MANUFACTURER MODEL #	SIZE	THROW	REMARKS/ACCESS.
S-1 CFM	METAL-AIRE MODFLO SERIES 9000	12"X12"	4	OFF WHITE IN COLOR. PROVIDE OBD'S HARD CEILING 9000-1 T-BAR CEILING 9000-6P
S-2 CFM	METAL-AIRE MODFLO SERIES 9000	14"X14"	4	OFF WHITE IN COLOR. PROVIDE OBD'S HARD CEILING 9000-1 T-BAR CEILING 9000-6P
S-3 CFM	METAL-AIRE MODFLO SERIES 9000	16"X16"	4	OFF WHITE IN COLOR. PROVIDE OBD'S HARD CEILING 9000-1 T-BAR CEILING 9000-6P
S-4 CFM	METAL-AIRE 4000VM	16"X12"	SWS	OFF WHITE IN COLOR. SIDEWALL SUPPLY
R-1 CFM	METAL-AIRE RH	14"X14"	1	OFF WHITE IN COLOR. PROVIDE OBD'S HARD CEILING - SIDEWALL T-BAR CEILING W/ FILLER PANEL
R-2 CFM	METAL-AIRE RH	16"X16"	1	OFF WHITE IN COLOR. PROVIDE OBD'S HARD CEILING - SIDEWALL T-BAR CEILING W/ FILLER PANEL
R-3 CFM	METAL-AIRE RH	18"X18"	1	OFF WHITE IN COLOR. PROVIDE OBD'S HARD CEILING - SIDEWALL T-BAR CEILING W/ FILLER PANEL
R-4 CFM	METAL-AIRE RH	22"X22"	1	OFF WHITE IN COLOR. PROVIDE OBD'S HARD CEILING - SIDEWALL T-BAR CEILING W/ FILLER PANEL
R-5 CFM	METAL-AIRE RH	24"X48"	1	OFF WHITE IN COLOR. PROVIDE OBD'S HARD CEILING - SIDEWALL T-BAR CEILING

FIELD VERIFY AND COORDINATE W/ ARCHITECT'S REFLECTED CEILING PLAN & FLOOR PLANS ALL GRILLE & REGISTER LOCATIONS.

MANDATORY REQUIREMENTS

A) The person with overall responsibility for construction or the person responsible for the installation of regulated manufactured devices shall post, or make available with the building permit(s) issued for the building, the installation Certificate(s) for manufactured devices regulated by the appliance standards or Part 6. Such Installation Certificate(s) shall be made available to the enforcement agency for all appropriate inspections, These certificates shall:

1. Identify features required to verify compliance with the appliance standards and Part 6.

2. Include a statement indicating that the installed devices conform to the Appliance Standards and Part 6 and the requirements for such devices given in the plans and specifications approvedby the local enforcement agency:

3. State the building permit number which the construction or installation was performed.

Sec. 10-103(a)3

B) After installing wall, ceiling or floor insulation the installer shall make available to the enforcement agency or post in a conspicuous location in the building a certificate signed by the installer stating that the installation is consistent with the plans and the requirements f Section 10-103-(a)2.A. The certificate shall also state the manufacturer's name and material identification and the installed R-value.

C) The builder shall provide the building owner or the person(s) responsible for building maintenance (in case of multi-tenant or centrally operated buildings) at occupancy the following:

1) Operating Information. A list of the heating, cooling, water heating, and lighting systems & features, materials, components, and mechanical devices, conservation or solar devices installed in the building, and instructions on how to use them efficiently.

2) Maintenance Information. Required routine maintenance action shall be clearly stated and incorporated on a readily accessible label. The label may be limited to identifying the maintenance manual.

3) Ventilation Information. A description of the quantities of outdoor and recirculated air that the ventilation system is designed to provide to each area.

Sec. 10-103(b)

D) The Lesser of the minimum rate of outdoor air required by Sec. 121(b)2, or three complete air changes shall be supplied to the entire building during the one-hour period immediately before the building is normally occupied.

EXHAUST FAN SCHEDULE

SYM	MANUFACTURER MODEL #	AREA SERVICED	CFM	ESP	AMPS	VOLT	PH	HP	RPM	WT.	BACK DRAFTDAMPER	MISC.
EF 1	BROAN L200	HEALTH SERVICES 114	200	0.125	1.6	120	1	—	—	22.0	YES	ROOF FLASHING & CAP 8"ø DUCT
EF 2												
EF 3												

REMARKS/ACCESS. INTERLOCK TOILET ROOM EXHAUST WITH LIGHTS
PROVIDE 1-HR WALL TIMER & SPEED CONTROL FOR EF-1

CONSULTANT
ENERGY & DUCT SYSTEMS
PHONE: (909)-925-0100
40492 CLARK DRIVE
HEMET, CALIFORNIA 92544

PROJECT
ARLANZA COMMUNITY CENTER
OFFICE REMODEL
7950 PHILBIN AVENUE
RIVERSIDE, CA

OWNER
CITY OF RIVERSIDE
PARK & RECREATION DEPARTMENT
3936 CHESTNUT STREET
RIVERSIDE, CA 92501
909-826-2012

DATE: 5-28-02 OWNER REVIEW

REVISIONS

DATE	DESCRIPTION
7-02-02	OWNER PLAN CHECK
8-13-02	B & S PLAN CHECK

BID SET DATE :

ADDENDA

MARK	DATE	DESCRIPTION
1		
2	4-21-03	OWNER REVISIONS
3		
4		
5		
6		

POST BID REVISIONS

MARK	DATE	DESCRIPTION
A		
B		
C		
D		
E		
F		

PROJECT NO:	01281
CAD DWG FILE:	MECH1.DWG
DRAWN BY:	E&DS / MSF
CHECKED BY:	GM/GM

SHEET TITLE
MECHANICAL SCHEDULES & NOTES WITH ALTERNATE

M1-R

SHEET # 21 OF 27

DRAWING NUMBER
PLAN HOLD CORPORATION • IRVINE, CALIFORNIA
REORDER BY NUMBER 075AR

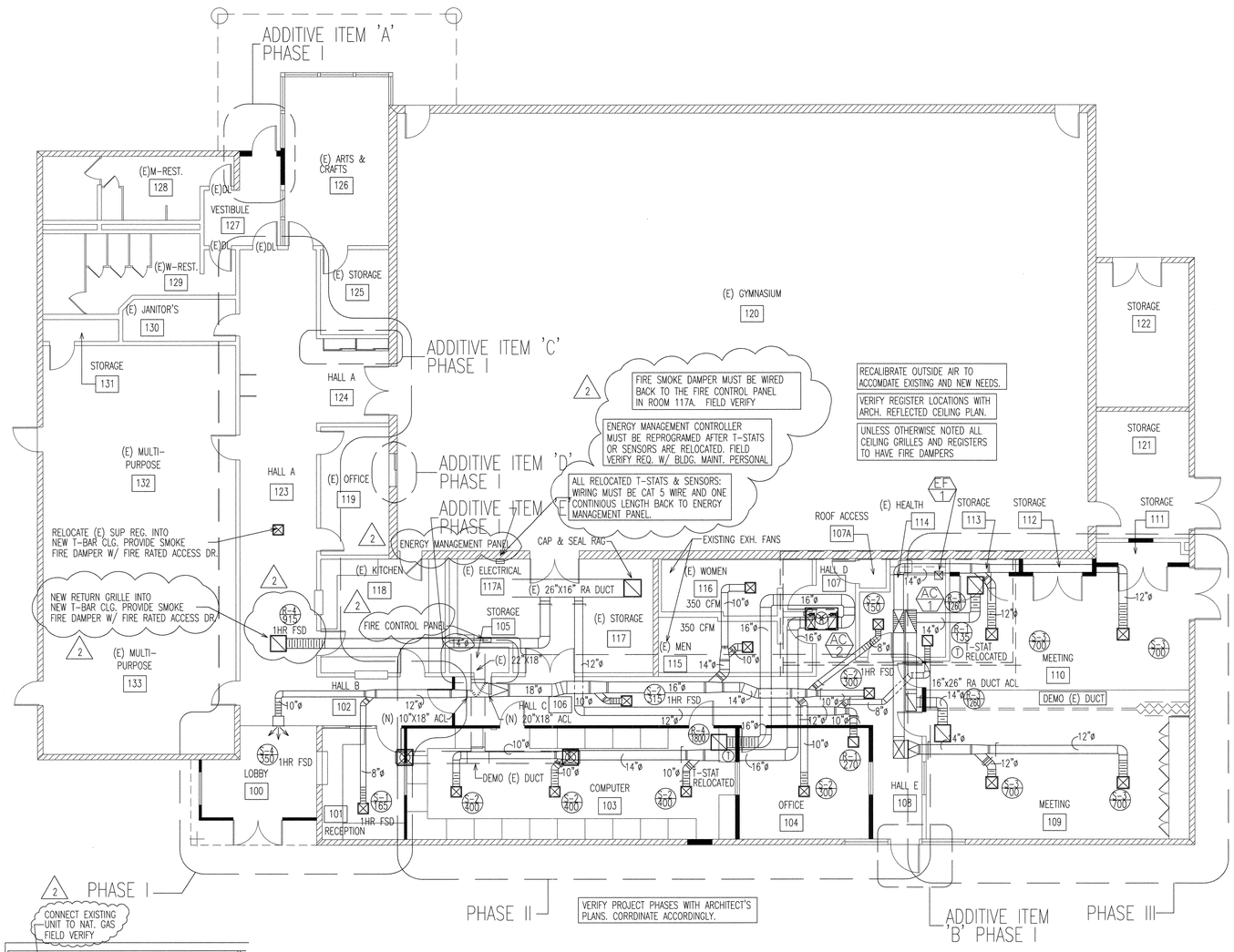

MECHANICAL PLAN
SCALE: 1/8" = 1'-0"

#2 EQUIPMENT WELL
SCALE: 1/8" = 1'-0"

CONSULTANT

ENERGY & DUCT SYSTEMS

PHONE: (909)-925-0100
40492 CLARK DRIVE
HEMET, CALIFORNIA 92544

PROJECT

ARLANZA COMMUNITY CENTER OFFICE REMODEL

7950 PHILBIN AVENUE
RIVERSIDE, CA

OWNER

CITY OF RIVERSIDE PARK & RECREATION DEPARTMENT

3936 CHESTNUT STREET
RIVERSIDE, CA 92501
909-826-2012

DATE: 5-28-02 OWNER REVIEW

REVISIONS

DATE	DESCRIPTION
7-02-02	OWNER PLAN CHECK
8-13-02	B & S PLAN CHECK

BID SET DATE :

ADDENDA

MARK	DATE	DESCRIPTION
1		
2	4-21-03	OWNER REVISIONS
3		
4		
5		
6		

POST BID REVISIONS

MARK	DATE	DESCRIPTION
A		
B		
C		
D		
E		
F		

PROJECT NO:	01281
CAD DWG FILE:	MECH1.DWG
DRAWN BY:	E&DS / MSF
CHECKED BY:	GM/GM

SHEET TITLE

MECHANICAL PLAN

M2-R

SHEET # 22 OF 27

DRAWING NUMBER
PLAN HOLD CORPORATION • IRVINE, CALIFORNIA
REORDER BY NUMBER 075AR
POSITION EDGE OF PRINT ON THIS LINE

DRAWING NUMBER
PLAN HOLD CORPORATION • IRVINE, CALIFORNIA
REORDER BY NUMBER 075AR

DRAWING NUMBER
PLAN HOLD CORPORATION • IRVINE, CALIFORNIA
REORDER BY NUMBER 075AR

DRAWING NUMBER
PLAN HOLD CORPORATION • IRVINE, CALIFORNIA
REORDER BY NUMBER 075AR

DRAWING NUMBER
PLAN HOLD CORPORATION • IRVINE, CALIFORNIA
REORDER BY NUMBER 075AR
POSITION EDGE OF PRINT ON THIS LINE

DRAWING NUMBER
PLAN HOLD CORPORATION • IRVINE, CALIFORNIA
REORDER BY NUMBER 075AR
POSITION EDGE OF PRINT ON THIS LINE

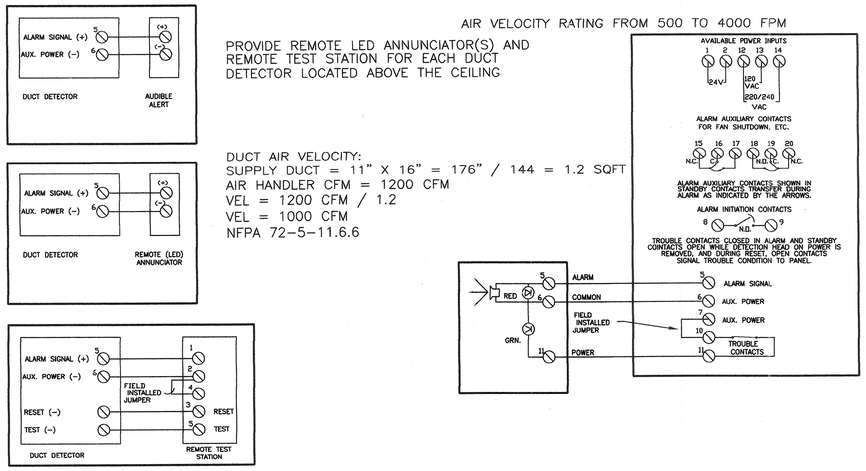

DUCT SMOKE DETECTOR

NTS

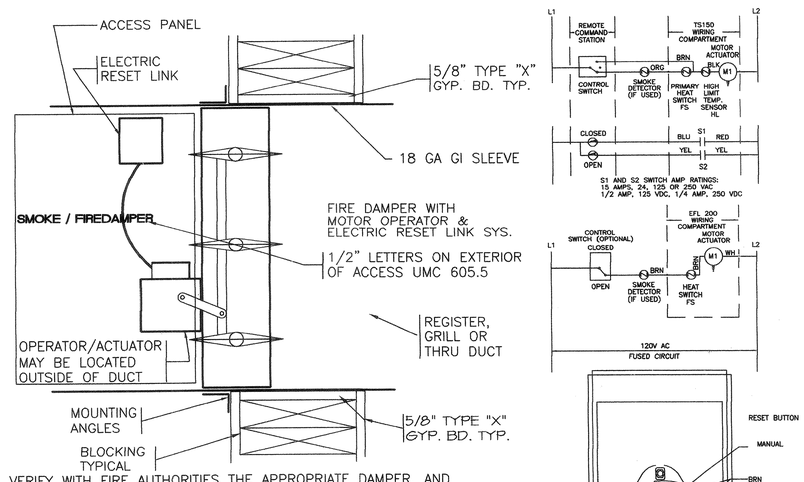

SMOKE & FIRE DAMPER

NTS

DIMENSION OF LONGEST SIDE, INCHES	SHEET METAL GAGE (ALL FOUR SIDES)	TRANSVERSE REINFORCING (1)					
		MINIMUM REINFORCING ANGLE SIZE AND MAXIMUM LONGITUDINAL SPACING BETWEEN TRANSVERSE JOINTS &/OR INTERMEDIATE REINFORCING	AT JOINTS				
			MIN. H. IN.	DRIVE SLIP / PLAIN S SLIP	HEMMED S SLIP	ALTER'NT BAR SLIP	REIN-FORCED BAR SLIP
				RECOM-MENDED GAGE	RECOM-MENDED GAGE	RECOM-MENDED GAGE	RECOM-MENDED GAGE
UP THRU 12	26	NONE REQUIRED	1	26	26	24	24
13 – 18	24	NONE REQUIRED	1	24	24	24	24
19 – 30	24	1"X1"X1/8" @ 60 IN	1	–	24	24	24
31 – 36	22	1"X1"X1/8" @ 60 IN	1	–	–	22	22

(1) TRANSVERSE REINFORCING SIZE IS DETERMINED BY DIMENSION OF SIDE TO WHICH ANGLE IS APPLIED.

(2) LONGITUDINAL JOINTS TO BE PITTSBURG OR SNAP LOCK TYPE.

DUCT CONSTRUCTION

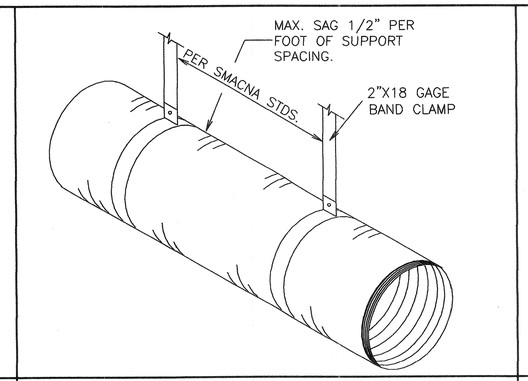

FLEX DUCT SUPPORT

NTS

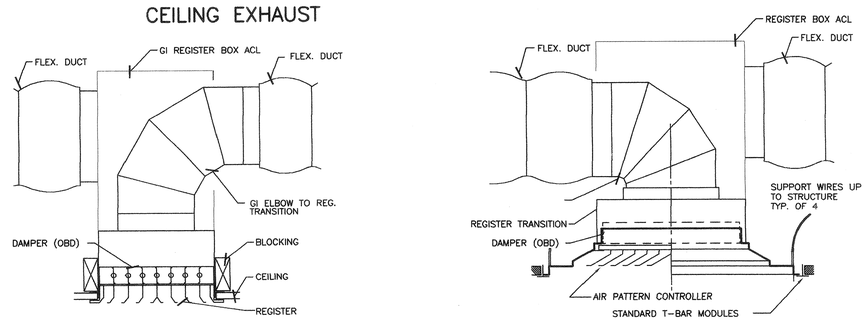

CEILING REGISTERS

NTS

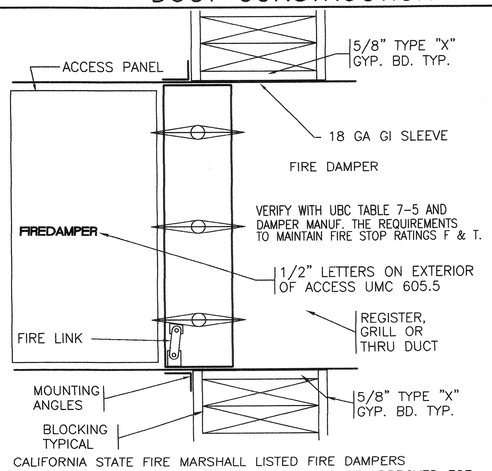

CALIFORNIA STATE FIRE MARSHALL LISTED FIRE DAMPERS ARE TO BE USED, USE FIRE DAMPERS THAT ARE APPROVED FOR BOTH DYNAMIC & STATIC SYSTEMS THROUGH ROOF & WALL APPLICATIONS.

VERIFY WITH FIRE AUTHORITIES THE APPROPRIATE DAMPER

SHOW ALL LOCATIONS OF DAMPERS ON THE ASBUILTS & ANY SERVICE THIS IS REQUIRED.

DUCT HANGERS

NTS

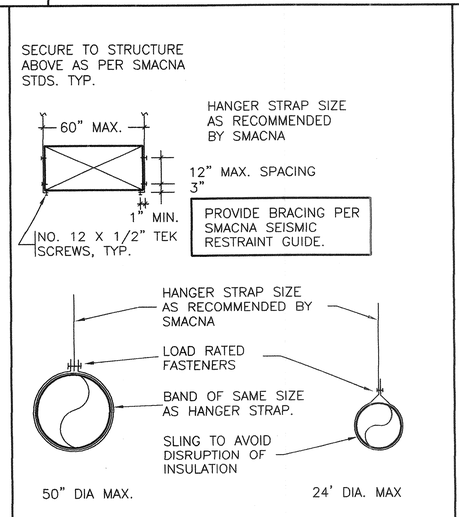

DUCT HANGERS

NTS

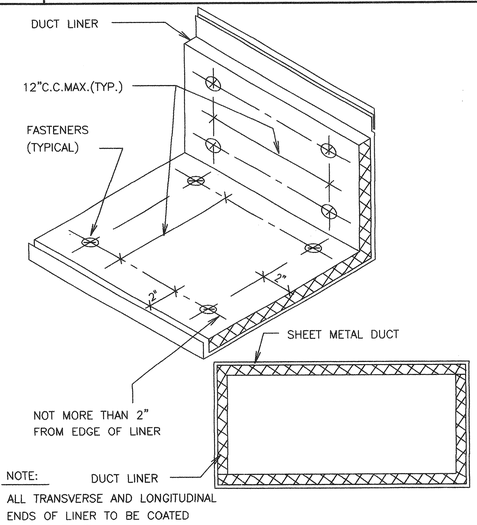

ALL TRANSVERSE AND LONGITUDINAL ENDS OF LINER TO BE COATED WITH ADHESIVE

DUCT LINER

NTS

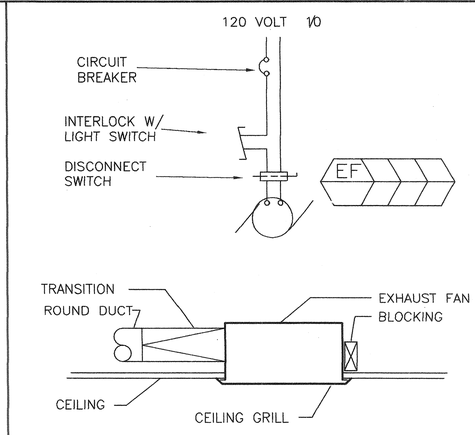

UMC SECTION 507 TERMINATION POINT FOR EXHAUST DUCT MUST BE 2 FT ABOVE THE ROOF, 10 FT FROM PARTS OF OR CONTIGUOUS BUILDINGS, ADJACENT PROPERTY LINE OR AIR INTAKE OPENINGS INTO ANY BUILDING, AND SHALL BE LOCATED AT LEAST 10 FT ABOVE THE ADJOINING GRADE LEVEL.

TYP. RESTRM EXH.

NTS

CONSULTANT
ENERGY & DUCT SYSTEMS
PHONE: (909)-925-0100
40492 CLARK DRIVE
HEMET, CALIFORNIA 92544

PROJECT
ARLANZA COMMUNITY CENTER OFFICE REMODEL
7950 PHILBIN AVENUE
RIVERSIDE, CA

OWNER
CITY OF RIVERSIDE PARK & RECREATION DEPARTMENT
3936 CHESTNUT STREET
RIVERSIDE, CA 92501
909-826-2012

DATE: 5-28-02 OWNER REVIEW

REVISIONS

DATE	DESCRIPTION
7-02-02	OWNER PLAN CHECK
8-13-02	B & S PLAN CHECK

BID SET DATE :

ADDENDA

MARK	DATE	DESCRIPTION
1		
2		
3		
4		
5		
6		

POST BID REVISIONS

MARK	DATE	DESCRIPTION
A		
B		
C		
D		
E		
F		

PROJECT NO:	01281
CAD DWG FILE:	MECH1.DWG
DRAWN BY:	E&DS / MSF
CHECKED BY:	GM/GM

SHEET TITLE

MECHANICAL DETAILS

M3

SHEET # 23 OF 27

MECHANICAL MANDATORY MEASURES — Part 2 of 2 — MECH-MM

PROJECT NAME: Arlanza Com. Center Additions & Alterations — DATE: 8/11/02

Description	Designer	Enforcement
Ventilation		
☐ § 121(e) Controls shall be provided to allow outside air dampers or devices to be operated at the ventilation rates as specified on these plans.		
☐ § 122(f) Gravity or automatic dampers interlocked and closed on fan shutdown shall be provided on the outside air intakes and discharges of all space conditioning and exhaust systems.		
☐ § 122(f) All gravity ventilating systems shall be provided with automatic or readily accessible manually operated dampers in all openings to the outside, except for combustion air openings.		
☒ § 121(f)1 Air Balancing: The system shall be balanced in accordance with the National Environmental Balancing Bureau (NEBB) Procedural Standards (1983), or Associated Air Balance Council (AABC) National Standards (1989); or		
☐ § 121(f)2 Outside Air Certification: The system shall provide the minimum outside air as shown on the mechanical drawings, and shall be measured and certified by the installing licensed C-20 mechanical contractor and certified by (1) the design mechanical engineer, (2) the installing licenced C-20 mechanical contractor, or (3) the person with overall responsibility for the design of the ventilation system; or		
☐ § 121(f)3 Outside Air Measurement: The system shall be equipped with a calibrated local or remote device capable of measuring the quantity of outside air on a continuous basis and displaying that quantity on a readily accessible display divice; or		
☐ § 121(f)4 Another method approved by the Commission.		
Service Water Heating Systems		
☐ § 113(b)2 If a circulating hot water system is installed, it shall have a control capable of automatically turning off the circulating pump(s) when hot water is not required.		
☐ § 113(b)3B Lavatories in restrooms of public facilities shall be equipped with controls to limit the outlet temperature to 110 degrees F.		
☐ § 113(b)3C Lavatories in restrooms of public facilities shall be equipped with one of the following:		
Outlet devices that limit the flow of hot water to a maximum of 0.5 gallons per minute.		
Foot actuated control valves, and outlet devices that limit the flow of hot water to a maximum of 0.75 gallons per minute.		
Proximity sensor actuated control valves, and outlet devices that limit the flow of hot water to a maximum of 0.75 gallons per minute.		
Self-closing valves, and outlet devices that limit the flow of hot water to a maximum of 2.5 gallons per minute, and 0.25 gallons/cycle (circulating system).		
Self-closing valves, and outlet devices that limit the flow of hot water to a maximum of 2.5 gallons per minute, and 0.50 gallons/cycle (non-circulating system).		
Self-closing valves, and outlet devices that limit the flow of hot water to a maximum of 2.5 gallons per minute, and 0.75 gallons/cycle (foot switches and proximity sensor controls).		

CERTIFICATE OF COMPLIANCE — Performance — MECH-1

PROJECT NAME: Arlanza Com. Center Additions & Alterations — DATE: 8/11/02

SYSTEM FEATURES

SYSTEM NAME	MECHANICAL SYSTEMS			NOTE TO FIELD
	HVAC System			
TIME CONTROL	Programmable Switch			
SETBACK CONTROL	Heating & Cooling Required			
ISOLATION ZONES	n/a			
HEAT PUMP THERMOSTAT?	n/a			
ELECTRIC HEAT?	n/a			
FAN CONTROL	Constant Volume			
VAV MINIMUM POSITION CONTROL?	No			
SIMULTANEOUS HEAT/COOL?	No			
HEATING SUPPLY RESET	Constant Temp			
COOLING SUPPLY RESET	Constant Temp			
HEAT REJECTION CONTROL	n/a			
VENTILATION	Air Balance			
OUTDOOR DAMPER CONTROL	Auto			
ECONOMIZER TYPE	Diff. Enth (Non-Integ)			
DESIGN O.A. CFM (MECH-3, COLUMN I)	294 cfm			
HEATING EQUIPMENT TYPE	Gas Furnace			
HEATING EQUIPMENT EFFICIENCY	82% AFUE			
COOLING EQUIPMENT TYPE	Split DX			
COOLING EQUIPMENT EFFICIENCY	12.0 SEER / 11.0 EER Existing			
MAKE AND MODEL NUMBER				
PIPE INSULATION REQUIRED?	Yes			
PIPE/DUCT INSULATION PROTECTED?	Yes			
HEATING DUCT LOCATION / R-VALUE	Ducts in Attic	4.2		
COOLING DUCT LOCATION / R-VALUE	Ducts in Attic	4.2		
VERIFIED SEALED DUCTS IN CEILING/ROOF SPACE	No			

CODE TABLES: Enter code from table below into columns above.

HEAT PUMP THERMOSTAT?	Y: Yes N: No	TIME CONTROL	SETBACK CTRL.	ISOLATION ZONES	FAN CONTROL
ELECTRIC HEAT?		S: Prog. Switch O: Occupancy Sensor M: Manual Timer	H: Heating C: Cooling B: Both	Enter Number of Isolation Zones.	I: Inlet Vanes P: Variable Pitch V: VFD O: Other C: Curve
VAV MINIMUM POSITION CONTROL?					
SIMULTANEOUS HEAT / COOL?					
HEAT AND COOL SUPPLY RESET?		**VENTILATION**	**OUTDOOR DAMPER**	**ECONOMIZER**	**O.A. CFM**
HIGH EFFICIENCY?		B: Air Balance C: Outside Air Cert. M: Out. Air Measure D: Demand Control N: Natural	A: Auto G: Gravity	A: Air W: Water N: Not Required EC: Economizer Control See Section 144(k)3	Enter Outdoor Air CFM. Note: This shall be no less than Col. H on MECH-3.
PIPE INSULATION REQUIRED?					
PIPE/DUCT INSULATION PROTECTED?					
SEALED DUCTS IN CEILING/ROOF SPACE?					

NOTES TO FIELD - For Building Department Use Only

Run Initiation Time: 08/11/02 16:41:40 — Run Code: 1029109300

PERFORMANCE CERTIFICATE OF COMPLIANCE — Part 3 of 3 — PERF-1

PROJECT NAME: Arlanza Com. Center Additions & Alterations — DATE: 8/11/02

ZONE INFORMATION

System Name	Zone Name	Occupancy Type	Floor Area (sqft.)	Inst. LPD (W/sf)[1]	Port. LPD (W/sf)[1]	Ctrl. Credits (W/sf)[2]	Tailored LPD (W/sf)[3]	Proc. Loads (W/sf)
HVAC System	Lobby	Office	137	*1.300				

Notes: 1. See LTG-1 (Items marked with asterisk, see LTG-2 by others) 2. See LTG-3 3. See LTG-4 Items above require special documentation

EXCEPTIONAL CONDITIONS COMPLIANCE CHECKLIST

The local enforcement agency should pay special attention to the items specified in this checklist. These items require special written justification and documentation, and special verification to be used with the performance approach. The local enforcement agency determines the adequacy of the justification, and may reject a building or design that otherwise complies based on the adequacy of the special justification and documentation submitted.

	Plan	Field
The HVAC System "Existing" includes an Economizer. This system has a cooling output < 75,000 btuh or a supply cfm < 2500.		

The exceptional features listed in this performance approach application have specifically been reviewed. Adequate written justification and documentation for their use have been provided by the applicant.

Authorized Signature or Stamp _____

Run Initiation Time: 08/11/02 16:41:40 — Run Code: 1029109300

PERFORMANCE CERTIFICATE OF COMPLIANCE — Part 1 of 3 — PERF-1

PROJECT NAME: Arlanza Com. Center Additions & Alterations — DATE: 8/11/02

PROJECT ADDRESS: 7950 Philbin Ave. Riverside — Building Permit #

PRINCIPAL DESIGNER - ENVELOPE: Gary W. Miller Architect & Associates — TELEPHONE: (909) 889-4480

DOCUMENTATION AUTHOR: Energy and Duct Systems — TELEPHONE: (909) 925-0100 — Checked by/Date — Enforcement Agency Use

GENERAL INFORMATION

DATE OF PLANS: — BUILDING CONDITIONED FLOOR AREA: 137 Sq.Ft. — CLIMATE ZONE: 10

BUILDING TYPE: ☒ NONRESIDENTIAL ☐ HIGH RISE RESIDENTIAL ☐ HOTEL/MOTEL GUEST ROOM

PHASE OF CONSTRUCTION: ☐ NEW CONSTRUCTION ☒ ADDITION ☐ ALTERATION ☐ EXISTING + ADDITION

STATEMENT OF COMPLIANCE

This Certificate of Compliance lists the building features and performance specifications needed to comply with Title 24, Parts 1 and 6, of the State Building Code. This certificate applies only to a Building using the performance compliance approach.

DOCUMENTATION AUTHOR: Marc Farmer — SIGNATURE — DATE: 8-11-02

The Principal Designers hereby certify that the proposed building design represented in the construction documents and modelled for this permit application are consistent with all other forms and worksheets, specifications, and other calculations submitted with this permit application. The proposed building as designed meets the energy efficiency requirements of the State Building Code, Title 24, Part 6.

ENV.	LTG.	MECH.	
☐	☐	☐	1. I hereby affirm that I am eligible under the provisions of Division 3 of the Business and Professions Code to sign this document as the person responsible for its preparation; and that I am licensed as a civil engineer, mechanical engineer, electrical engineer or architect.
☐	☐	☐	2. I affirm that I am eligible under the provisions of Division 3 of the Business and Professions Code Section 5537.2 or 6737.3 to sign this document as the person responsible for its preparation; and that I am a licensed contractor preparing documents for work that I have contracted to perform.
☐	☐	☐	3. I affirm that I am eligible under Division 3 of the Business and Professions Code to sign this document because it pertains to a structure or type of work described as exempt pursuant to Business and Professions Code Sections 5537, 6737.1 (These sections of the Business and Professions Code are printed in full in the Nonresidential Manual.)

ENVELOPE COMPLIANCE

Indicate location on plans of Note Block for Mandatory Measures — Required Forms: ENV-1

PRINCIPAL ENVELOPE DESIGNER - NAME: Gary W. Miller Architect & Associates — SIGNATURE — LIC. NO. — DATE

LIGHTING COMPLIANCE

Indicate location on plans of Note Block for Mandatory Measures — Required Forms: Lighting Compliance Not In The Scope Of This Submittal

PRINCIPAL LIGHTING DESIGNER - NAME — SIGNATURE — LIC. NO. — DATE

MECHANICAL COMPLIANCE

Indicate location on plans of Note Block for Mandatory Measures — Required Forms: MECH-1, MECH-2, MECH-3

PRINCIPAL MECHANICAL DESIGNER - NAME — SIGNATURE — LIC. NO.: 516852 — DATE: 8-11-02

Run Initiation Time: 08/11/02 16:41:40 — Run Code: 1029109300

MECHANICAL MANDATORY MEASURES — Part 1 of 2 — MECH-MM

PROJECT NAME: Arlanza Com. Center Additions & Alterations — DATE: 8/11/02

DESCRIPTION	Designer	Enforcement
Equipment and Systems Efficiencies		
☐ § 111 Any appliance for which there is a California standard established in the Appliance Efficiency Regulations will comply with the applicable standard.		
☐ § 115(a) Fan type central furnaces shall not have a pilot light.		
☐ § 123 Piping, except that conveying fluids at temperatures between 60 and 105 degrees Fahrenheit, or within HVAC equipment, shall be insulated in accordance with Standards Section 123.		
☒ § 124 Air handling duct systems shall be installed and insulated in compliance with Sections 601, 603 and 604 of the Uniform Mechanical Code.		
Controls		
§ 122(e) Each space conditioning system shall be installed with one of the following:		
☐ § 122(e)1A Each space conditioning system serving building types such as offices and manufacturing facilities (and all others not explicitly exempt from the requirements of Section 112 (d)) shall be installed with an automatic time switch with an accessible manual override that allows operation of the system during off-hours for up to 4 hours. The time switch shall be capable of programming different schedules for weekdays and weekends; incorporate an automatic holiday "shut-off" feature that turns off all loads for at least 24 hours, then resumes the normally scheduled operation; and has program backup capabilities that prevent the loss of the device's program and time setting for at least 10 hours if power is interrupted; or		
☐ § 122(e)1B An occupancy sensor to control the operating period of the system; or		
☐ § 122(e)1C A 4-hour timer that can be manually operated to control the operating period of the system.		
☐ § 122(e)2 Each space conditioning system shall be installed with controls that temporarily restart and temporarily operate the system as required to maintain a setback heating and/or a setup cooling thermostat setpoint.		
☐ § 122(g) Each space conditioning system serving multiple zones with a combined conditioned floor area more than 25,000 square feet shall be provided with isolation zones. Each zone: shall not exceed 25,000 square feet; shall be provided with isolation devices, such as valves or dampers, that allow the supply of heating or cooling to be setback or shut off independently of other isolation areas; and shall be controlled by a time control device as described above.		
☐ § 122(a&b) Each space conditioning system shall be controlled by an individual thermostat that responds to temperature within the zone. Where used to control heating, the control shall be adjustable down to 55 degrees F or lower. For cooling, the control shall be adjustable up to 85 degrees F or higher. Where used for both heating and cooling, the control shall be capable of providing a deadband of at least 5 degrees F within which the supply of heating and cooling is shut off or reduced to a minimum.		
☐ § 122(c) Thermostats shall have numeric setpoints in degrees Fahrenheit (F) and adjustable setpoint stops accessible only to authorized personnel.		
☐ § 112(b) Heat pumps shall be installed with controls to prevent electric resistance supplementary heater operation when the heating load can be met by the heat pump alone.		

ENVELOPE COMPLIANCE SUMMARY — Performance — ENV-1

PROJECT NAME: Arlanza Com. Center Additions & Alterations — DATE: 8/11/02

OPAQUE SURFACES

#	Surface Type	Framing Type	Area	U-Fac.	Act. Azm.	Tilt	Solar Gains Y/N	Form 3 Reference	Location / Comments
1	Wall	Wood	29	0.088	180	90	X	R-13 Wall (W.13.2x4.16)	Lobby
2	Door	None	21	0.581	180	90	X	Hollow Metal Door	Lobby
3	Wall	Wood	102	0.088	0	90	X	R-13 Wall (W.13.2x4.16)	Lobby
4	Door	None	42	0.357	0	90	X	Solid Wood Door	Lobby
5	Wall	Wood	86	0.088	270	90	X	R-13 Wall (W.13.2x4.16)	Lobby
6	Roof	Wood	130	0.051	0	0	X	R-19 Roof (R.19.2x8.16)	Lobby

FENESTRATION SURFACES

Site Assembled Glazing ☐ Check box if Building is >= 100,000 sqft of CFA and >= 10,000 sqft vertical glazing then NFRC Certification is required. Follow NFRC 100-SB Procedures and submit NFRC Label Certificate Form.

#	Type	Area	U-Fac.	Act. Azm.	SHGC	Glazing Type	Location / Comments

EXTERIOR SHADING

#	Exterior Shade Type	SHGC	Window Hgt. Wd.	Overhang Len. Hgt.	LExt.RExt.	Left Fin Dist. Len. Hgt.	Right Fin Dist. Len. Hgt.

Run Initiation Time: 08/11/02 16:41:40 — Run Code: 1029109300

PERFORMANCE CERTIFICATE OF COMPLIANCE — Part 2 of 3 — PERF-1

Arlanza Com. Center Additions & Alterations — DATE: 8/11/02

ANNUAL SOURCE ENERGY USE SUMMARY (kBtu/sqft-yr)

ENERGY COMPONENT	Standard Design	Proposed Design	Compliance Margin
Space Heating	10.05	15.79	-5.84
Space Cooling	32.85	24.09	8.76
Indoor Fans	0.00	2.19	-2.19
Heat Rejection	0.00	0.00	0.00
Pumps & Misc.	0.00	0.00	0.00
Domestic Hot Water	0.00	0.00	0.00
Lighting	37.23	37.23	0.00
Receptacle	26.28	26.28	0.00
Process	0.00	0.00	0.00
TOTALS:	107.30	106.57	0.73

Percent better than Standard: 0.7% (Excludes Process), 0.7% (Excludes Process & Receptacle)

BUILDING COMPLIES

GENERAL INFORMATION

Building Orientation	(North) 0 deg	Conditioned Floor Area	137 sqft.
Number of Stories	1	Unconditioned Floor Area	0 sqft.
Number of Systems	1	Conditioned Footprint Area	137 sqft.
Number of Zones	1		

	Orientation	Gross Area	Glazing Area	Glazing Ratio
Front Elevation	(North)	144 sqft.	0 sqft.	0.0%
Left Elevation	(East)	0 sqft.	0 sqft.	0.0%
Rear Elevation	(South)	50 sqft.	0 sqft.	0.0%
Right Elevation	(West)	86 sqft.	0 sqft.	0.0%
Total		280 sqft.	0 sqft.	0.0%
Roof		130 sqft.	0 sqft.	0.0%

	Standard	Proposed
Lighting Power Density	1.300 W/sqft.	1.300 W/sqft.
Prescriptive Env. Heat Loss	42	26
Prescriptive Env. Heat Gain	4,133	1,746

Remarks:

Run Initiation Time: 08/11/02 16:41:40 — Run Code: 1029109300

CONSULTANT
ENERGY & DUCT SYSTEMS
PHONE: (909)-925-0100
40492 CLARK DRIVE
HEMET, CALIFORNIA 92544

REGISTERED PROFESSIONAL ENGINEER — MELVIN P. MENDENHALL — NO. M025515 — Exp. 9-30-02 — MECHANICAL — STATE OF CALIFORNIA

PROJECT

ARLANZA COMMUNITY CENTER OFFICE REMODEL

7950 PHILBIN AVENUE
RIVERSIDE, CA

OWNER

CITY OF RIVERSIDE
PARK & RECREATION DEPARTMENT
3936 CHESTNUT STREET
RIVERSIDE, CA 92501
909-826-2012

DATE: 5-28-02 OWNER REVIEW

REVISIONS

DATE	DESCRIPTION
7-02-02	OWNER PLAN CHECK
8-13-02	B & S PLAN CHECK

BID SET DATE :

ADDENDA

MARK	DATE	DESCRIPTION
1		
2		
3		
4		
5		
6		

POST BID REVISIONS

MARK	DATE	DESCRIPTION
A		
B		
C		
D		
E		
F		

PROJECT NO:	01281
CAD DWG FILE:	MECH1.DWG
DRAWN BY:	E&DS / MSF
CHECKED BY:	GM/GM

SHEET TITLE

MECHANICAL ENERGY CALCS.

M4

SHEET # OF