PORTION 2 BID PACKAGE

Arlanza Neighborhoods Initiative Project

Arlanza Youth & Family Resource Center City of Riverside

BRYANT PARK SITE

RIVERSIDE, CALIF

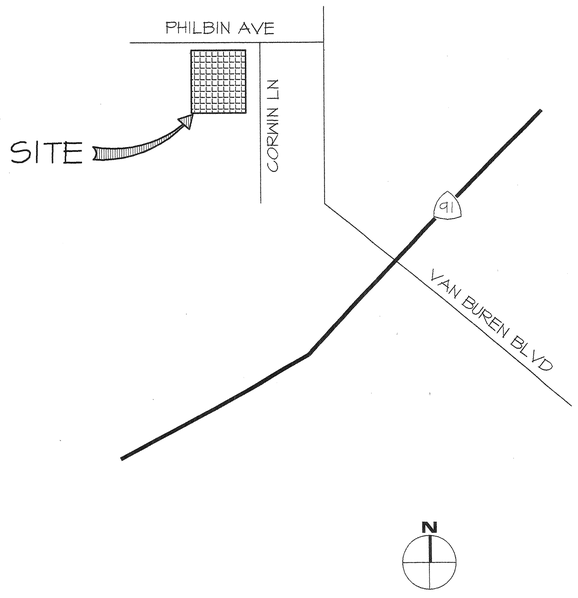

VICINITY MAP

OWNER:

CITY OF RIVERSIDE
ADMINISTRATIVE SERVICES DEPT.
BUILDING SERVICES DIVISION
MR. RON OSTMAN, PROJECT MANAGER
8095 LINCOLN AVE.
RIVERSIDE, CA 92504
(909) 351-6164

MR. PEDRO PAYNE, PROGRAM MANAGER
ARLANZA NEIGHBORHOOD INITIATIVE
OFFICE OF NEIGHBORHOODS
6951 FLIGHT ROAD, SUITE 214
RIVERSIDE, CA 92504
(909) 688-7980

ARCHITECT:

HIGGINSON+CARTOZIAN ARCHITECTS, INC.
127 E. STATE STREET
REDLANDS, CA 92373
(909) 793-3100

DAVID HIGGINSON, AIA

STRUCTURAL ENGINEER

KANDA TSO ASSOCIATES
511 MISSION STREET
SOUTH PASADENA, CALIF. 91030
(626)441-1211

LES TSO, SE

PROJECT REPRESENTATIVES

IT IS THE INTENT OF THIS CONTRACT TO CONSTRUCT ALL INTERIOR AND EXTERIOR IMPROVEMENTS TO EXISTING MODULAR UNITS BEING PLACED ON SITE UNDER SEPERATE CONTRACT.
CONTRACT SHALL INCLUDE, BUT NOT LIMITED TO THE FOLLOWING:

- CONSTRUCTION OF INTERIOR WALLS, DOORS, WINDOWS, ETC. INCLUDING ALL REQUIRED FINISHES.
- CONSTRUCTION OF NEW EXTERIOR CLOTH SHADE STRUCTURE WALK COVER. (SEE DESIGN/BUILD NOTE BELOW)
- NEW ELECTRICAL SERVICE INCLUDING ALL INTERIOR ELECTRICAL OUTLETS, DATA, PHONES, LIGHTING ETC.
- CONSTRUCTION OF NEW SUSPENDED CEILING SYSTEMS.
- NEW EXTERIOR FINISH TREATMENTS
- PROVIDE SECURITY AND ADEQUATE PROTECTION OF PROJECT SITE
- GRADING AND SOILS REMOVAL IN ACCORDANCE WITH GRADING PLANS PREPARED BY KCT CONSULTANTS.
- ALL REQUIRED PLUMBING WORK IN MODULARS AND ALL REQUIRED SITE UTILITY DISTRIBUTION
- COMPLETE INSTALLATION OF FIRE SPRINKLER SYSTEMS
- REMOVE ALL DEMOLISHED ITEMS TO AN APPROVED DUMP SITE.
- CLEAN-UP OF ENTIRE BUILDING & SITE PRIOR TO PROJECT ACCEPTANCE.

FIRE SPRINKLER NOTE: BUILDING TO BE EQUIPPED WITH A FULLY OPERATIONAL FIRE SPRINKLER SYSTEM INCLUDING ALL HEADS, PIPING, RISERS, VALVES, ETC. SYSTEM TO BE INSTALLED BY A CALIFORNIA LICENSED FIRE SPRINKLER CONTRACTOR WHO SHALL PREPARE FULLY DETAILED PLANS AND CALCULATIONS. PLANS SHALL BE SUBMITTED TO THE CITY OF RIVERSIDE FIRE DEPARTMENT / BUILDING & SAFETY FOR APPROVAL PRIOR TO COMMENCING INSTALLATION.

FIRE ALARM NOTE: NEW CHILDCARE AREA SHALL BE PROVIDED WITH AN APPROVED SMOKE DETECTOR AND MAUNAL FIRE ALARM SYSTEM PER SECTION 908.10. PROVIDE FULLY DETAILED PLANS AND SPECIFICATIONS TO THE CITY OF RIVERSIDE FIRE DEPARTMENT FOR APPROVAL PRIOR TO INSTALLATION.

SHADE CLOTH WALKWAY DESIGN NOTE: THE CONTRACTOR SHALL INCLUDE IN HIS BID A COMPLETE PRICE TO FULLY DESIGN AND PROVIDE ENGINEERING DRAWINGS AND CALCULATIONS FOR THE CLOTH WALKWAY ASSEMBLY AS SHOWN ON THE PLANS. ALL COLUMNS SHALL BE FIRE-FINISHED STEEL AND CLOTH SHALL BE FIRE RETARDANT. CONTRACTOR SHALL SUBMIT FULLY DETAILED PLANS AND SPECIFICATIONS TO THE CITY OF RIVERSIDE FOR DEFERRED APPROVAL PRIOR TO COMMENCING THIS PORTION OF THE WORK. COLOR OF CLOTH SHALL BE SELECTED BY OWNER FROM MANUFACTURERS STANDARD COLORS.

GENERAL SCOPE

T1.0 TITLE SHEET

A5.1 SITE PLAN & DETAILS

A1.0 FLOOR PLAN
A2.0 EXTERIOR ELEVATIONS / ROOF PLAN
A3.0 REFLECTED CEILING PLAN & DETAILS
A4.0 DETAILS
A5.0 DOOR SCHEDULE
A6.0 FINISH SCHEDULE

P0.0 PLUMBING LEGEND, DETAILS & SCHEDULES
P1.0 PLUMBING PLANS
P2.0 PLUMBING ISOMETRICS

M1.0 MECHANICAL SCHEDULE & DETAILS
M2.0 MECHANICAL PLANS & DETAILS
M3.0 MECHANICAL SPECS

E0.1 SYMBOL LIST, NOTES, SINGLE LINE & FIX. SCHD.
E1.0 ELECTRICAL SITE PLAN
E2.0 POWER & LIGHTING PLAN
E3.0 FIRE ALARM PLAN

REFER TO SEPERATE PLANS PREPARED BY KCT ENGINEERS FOR REQUIRED GRADING AND UTILITY WORK

SHEET INDEX

APPLICABLE CODES

1997 UNIFORM BUILDING CODE	2001 CALIFORNIA BUILDING CODE
2000 UNIFORM MECHANICAL CODE	2001 CALIFORNIA MECHANICAL CODE
2000 UNIFORM PLUMBING CODE	2001 CALIFORNIA PLUMBING CODE
1999 NATIONAL ELECTRICAL CODE	2001 CALIFORNIA ELECTRICAL CODE

TYPE OF CONSTRUCTION	TYPE V NON-RATED
AUTOMATIC FIRE SPRINKLER SYSTEM	YES
OCCUPANCY CLASSIFICATIONS	MIXED-USE E-3/B
BUILDING AREA (SQ. FT.)	GROSS AREA

CODE DATA

FURNISH ALL ITEMS REQUIRED FOR THE PROPER EXECUTION AND COMPLETION

GENERAL CONSTRUCTION NOTES:

1.) THESE DRAWINGS INDICATE THE GENERAL SCOPE OF THE PROJECT IN TERMS OF ARCHITECTURAL DESIGN CONCEPT, THE DIMENSIONS OF THE BUILDING, THE MAJOR ARCHITECTURAL ELEMENTS AND THE TYPE OF STRUCTURAL, MECHANICAL, ELECTRICAL SYSTEMS. ON THE BASIS OF THE GENERAL SCOPE INDICATED OR DESCRIBED, THE CONTRACTOR SHALL FURNISH ALL ITEMS REQUIRED FOR THE PROPER EXECUTION AND COMPLETION OF THE WORK.

2.) ALL CONSTRUCTION AND MATERIALS SHALL BE AS SPECIFIED AND AS REQUIRED BY THE CURRENT EDITION OF THE UBC, LOCAL CODES, AND AUTHORITIES.

3.) THE CONTRACTOR SHALL VERIFY ALL DIMENSIONS AND SITE CONDITIONS BEFORE STARTING ANY WORK. SHOULD A DISCREPANCY APPEAR IN THE SPECIFICATIONS OR DRAWINGS, OR IN THE WORK DONE BY OTHERS FROM THE CONTRACT DOCUMENT THAT AFFECT ANY WORK. NOTIFY THE ARCHITECT AT ONCE FOR INSTRUCTION ON HOW TO PROCEED. IF THE CONTRACTOR PROCEEDS WITH THE WORK AFFECTED WITHOUT INSTRUCTION FROM THE ARCHITECT, THE CONTRACTOR SHALL CORRECT ANY RESULTING DAMAGE OR DEFECT TO THE SATISFACTION OF THE ARCHITECT. SHOULD A CONFLICT OCCUR BETWEEN DRAWINGS AND SPECIFICATIONS, OR WHERE DETAIL REFERENCES ON CONTRACT DRAWINGS HAVE BEEN OMITTED, THE CONTRACTOR IS DEEMED TO HAVE ESTIMATED THE MOST EXPENSIVE MATERIALS AND CONSTRUCTION METHOD INVOLVED, UNLESS A WRITTEN DECISION FROM THE ARCHITECT HAS BEEN OBTAINED WHICH DESCRIBES AN ALTERNATE METHOD AND/OR MATERIALS.

4.) THE CONTRACTOR SHALL CONFINE HIS/HER OPERATIONS ON THE SITE TO AREAS PERMITTED BY THE CITY.
AREA SHALL BE COMPLETELY SEALED OFF TO PREVENT DUST AND DEBRIS ENTERING THE LIVING AREA. THE WORK SHALL BE DONE IN ACCORDANCE WITH ALL APPLICABLE LAWS, LOCAL ORDINANCES, PERMITS, AND THE CONTRACT DOCUMENTS. THE JOB SITE SHALL BE MAINTAINED IN A CLEAN, ORDERLY CONDITION AND FREE OF DEBRIS AND LITTER. CONTRACTOR SHALL REMOVE ALL TRASH AND DEBRIS AS A RESULT OF HIS OPERATION IMMEDIATELY UPON COMPLETION OF EACH PHASE OF HIS WORK.

5.) ALL MATERIAL STORED ON THE SITE SHALL BE PROPERLY STACKED AND PROTECTED TO PREVENT DAMAGE AND DETERIORATION UNTIL USE. FAILURE TO PROTECT MATERIALS MAY BE CAUSE FOR REJECTION OF THE WORK.

6.) ALL PATCHING, REPAIRING, AND REPLACING OF MATERIALS AND SURFACES CUT OR DAMAGED IN EXECUTION OF WORK, SHALL BE DONE WITH APPLICABLE MATERIALS SO THAT SURFACES REPLACED SHALL MATCH SURROUNDING SURFACES.

7.) NO PORTION OF THE WORK REQUIRING A SHOP DRAWING OR SAMPLE SUBMITTAL SHALL BE COMMENCED UNTIL THE SUBMITTAL HAS BEEN APPROVED BY THE ARCHITECT. ALL SUCH PORTIONS OF THE WORK SHALL BE IN ACCORDANCE WITH APPROVED SHOP DRAWINGS AND SAMPLES.

8.) DIMENSIONS
A. ALL DIMENSIONS SHALL HAVE PREFERENCE OVER SCALE.

9.) CONTRACTOR SHALL VERIFY DIMENSIONS OF EXISTING MODULES AND UNDERFLOOR FRAMING PRIOR TO START OF FOUNDATION WORK. ANY DISCREPENCIES BETWEEN FRAMING AND CONCRETE WORK SHALL BE BROUGHT TO THE ATTENTION OF THE ARCHITECT IMMEDIATELY SO DESIGN REVISIONS CAN BE ISSUED PRIOR TO WORK PROCEEDING.

GENERAL CONSTRUCTION NOTES

APPROVALS

LICENSED ARCHITECT: DAVID HIGGINSON NO. C19168 REN 06-30-05 STATE OF CALIFORNIA

higginson + cartozian architects, inc.
architecture ◆ planning ◆ design
David Higginson, Architect
127 East State Street
Redlands, California 92373
ph. (909) 793-3100 fax (909) 793-3140

1 REVISIONS
2 DATE: 12/04/03
3 DATE:

CONSULTANT:

Arlanza Neighborhoods Initiative Project
Arlanza Youth & Family Resource Center
City of Riverside

SHEET TITLE: TITLE SHEET

DRAWN BY: DWH
CHECKED BY: DWH
DATE: 12/04/03

SHEET NO:
T1.0

30202 / TS00-02

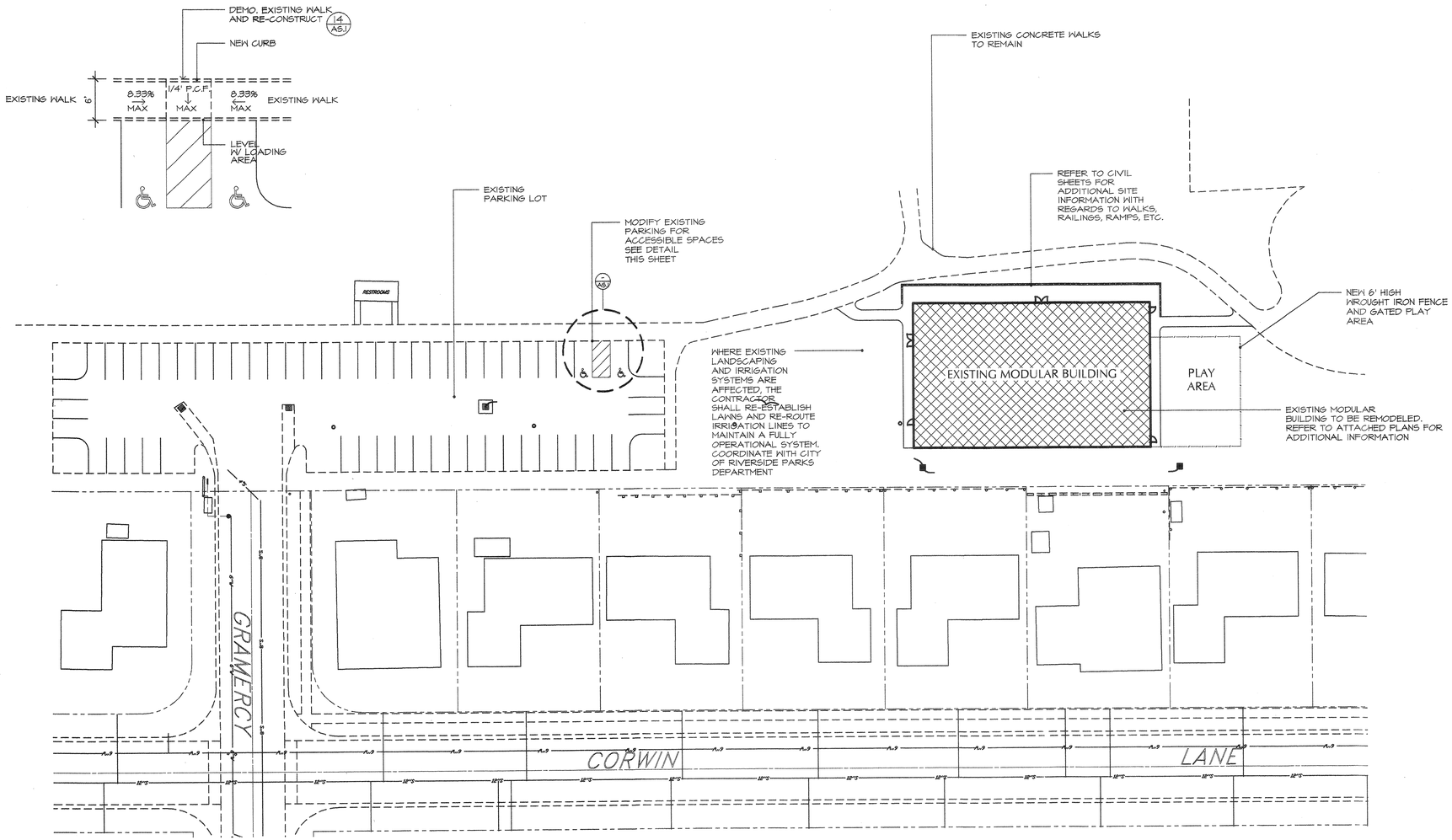

PARTIAL SITE PLAN | 1" = 30' | 14

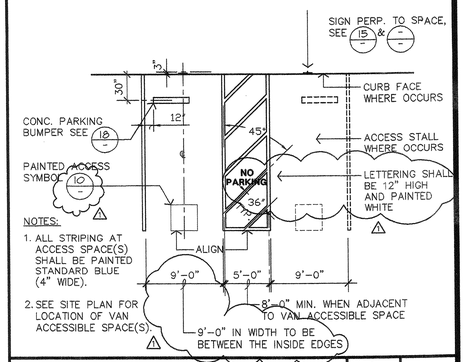

DP PARKING STALL | 1/4" | 5

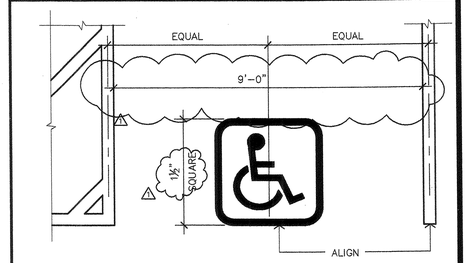

NOTES

1. ALL LINES (STRIPES) PAINTED BLUE.
2. ACCESSIBLE SYMBOL PAINTED WHITE REFLECTORIZED STRIPING ON BLUE BACKGROUND.
3. ORIENTATION AND EXTENT OF LINES AS SHOWN ON SITE PLAN.

DP PARKING STALL | 1/2" | 10

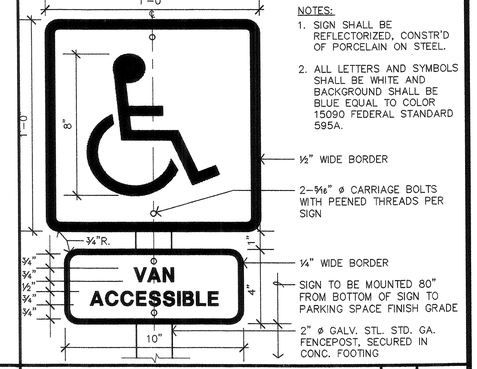

DP SIGNAGE | 3" | 15

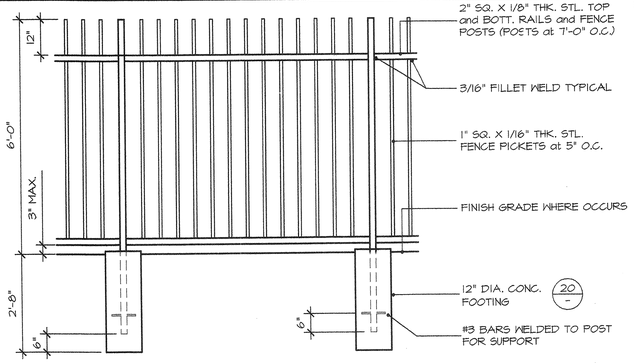

NOTE:

1. ALL POSTS, FRAMES, PICKETS, ETC. PAINTED IN POLYURETHANE PAINT FINISH COLOR SELECTED BY THE ARCHITECT.
2. CONTRACTOR TO FIELD VERIFY ALL FIELD CONDITIONS PRIOR TO FABRICATION OF MTL. FENCE/GATES. STEP as REQUIRED. OPENINGS BELOW TO NOT EXCEED 3" MAX.
3. FENCE/GATES SHALL BE WELDED CONSTRUCTION with ALL WELDS GROUNDED SMOOTH FOR PAINT.
4. ALL POSTS/RAILS/PICKETS SHALL HAVE WELDED CAPS at TOP and BOTTOM.

CONCRETE: fc' = 2500 PSI

REBARS: GR. 40 DEF.

PLAY FENCE ELEVATION | 1/2" | 17

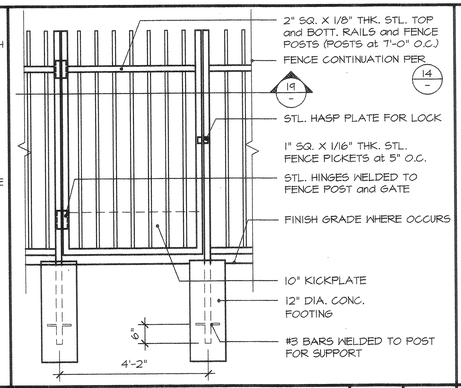

GATE | 1/2" | 18

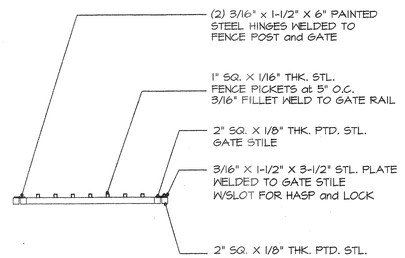

GATE SECTION | 1/2" | 19

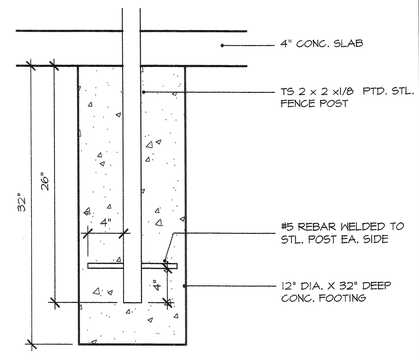

FENCE FOOTING | 1" | 20

ARCHITECT:
LICENSED ARCHITECT DAVID HIGGINSON NO. C19168 REN. 6.30.05 STATE OF CALIFORNIA

CONSULTANT:

REVISIONS
DATE: 12/04/03
DATE:

higginson + cartozian architects, inc.
architecture ◆ planning ◆ design
David Higginson, Architect
127 East State Street
Redlands, California 92373
ph. (909) 793-3100 fax (909) 793-3140

Arlanza Neighborhoods Initiative Project
Arlanza Youth & Family Resource Center
City of Riverside

SHEET TITLE: SITE PLAN

DRAWN BY: S.T.B.

CHECKED BY: D.K.C.

DATE: OCT. 2003

SHEET NO: AS.1

30202\SP00-01

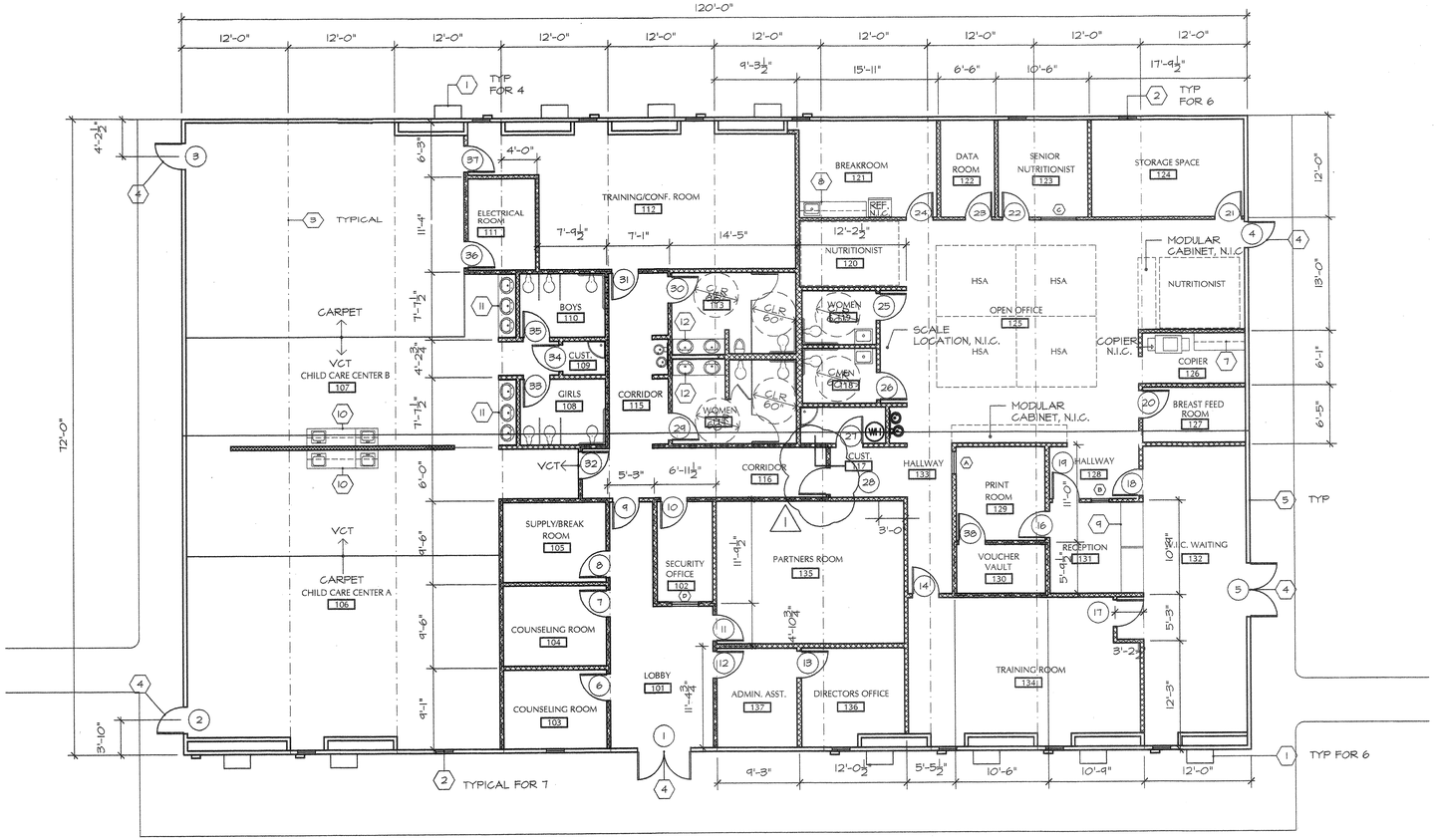

LEGEND

(O) DOOR NUMBER SEE SHEET A5.0

(D) WINDOW DESIGNATION SEE SHEET A5.0

BUILDING FLOOR PLAN

SCALE: 1/8" = 1'-0"

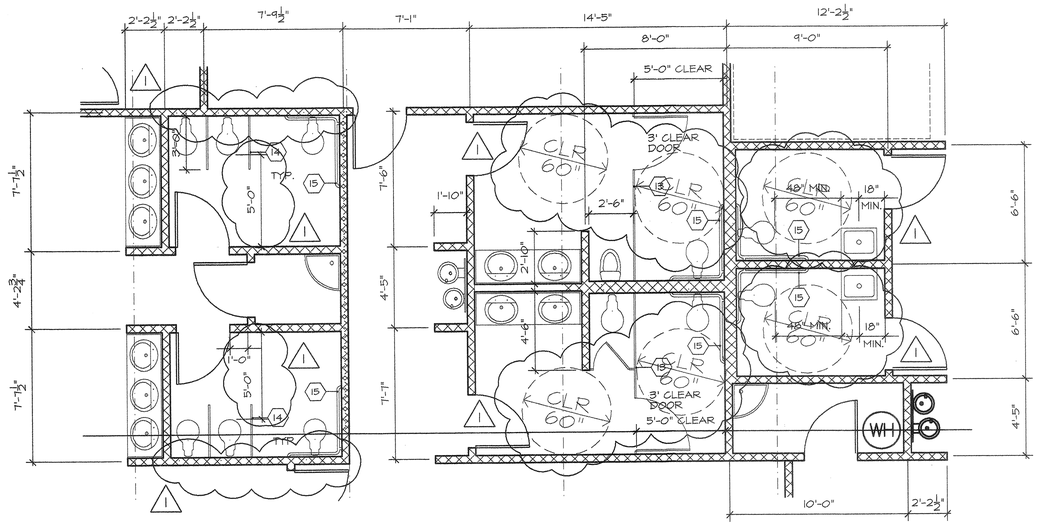

ENLARGED TOILET ROOM FLOOR PLAN

SCALE 1/8" = 1'-0"

WALL LEGEND

- EXISTING WALL TO REMAIN REMOVE ALL INTERIOR FINISHES FOR INSTALLATION OF NEW
- NEW INTERIOR WOOD STUD WALL WITH 1 LAYER 5/8 GWB EA. SIDE (WATER RESISTANT @ ALL TOILET ROOMS)
- NEW 1 HOUR FIRE RATED PARTITION WITH 1 LAYER TYPE 'X' 5/8" GWB EA. SIDE FULL HEIGHT TO UNDERSIDE OF BLDG ROOF DECK

KEY NOTES

1. EXISTING HVAC UNIT. MECHANICAL PLANS
2. EXISTING EXT. WINDOWS TO REMAIN
3. EXISTING MOD-LINE
4. NEW EXTERIOR DOOR. DEFRAME WALL AS REQUIRED TO ACCOMODATE NEW DOOR. NEW HEADER SHALL BE 4 X 6 FOR 3'-0" DOOR AND 4 X 8 FOR DOUBLE DOORS. SEE DETAIL 6/A4.0 1
5. ALL EXTERIOR WALLS TO BE PROVIDED WITH NEW R-13 BATT INSULATION
6. PROVIDE NEW R-30 BATT INSULATION AT ALL SUSPENDED CEILING AREAS.
7. NEW CABINET, SEE 1
8. NEW CABINET, SEE 2
9. NEW CABINET, SEE 3
10. NEW CABINETS, SEE 5 TYP. FOR 2
11. NEW CHILD SINK COUNTER, SEE 6 TYP. FOR 2
12. NEW SINK COUNTER, SEE 7 TYP. FOR 2
13. NEW METAL TOILET PARTITION
14. NEW METAL PRIVACY PARTITION 4'-0" TALL, FLOOR MOUNTED
15. GRAB BAR 15/A4.0

CABINET ELEVATIONS

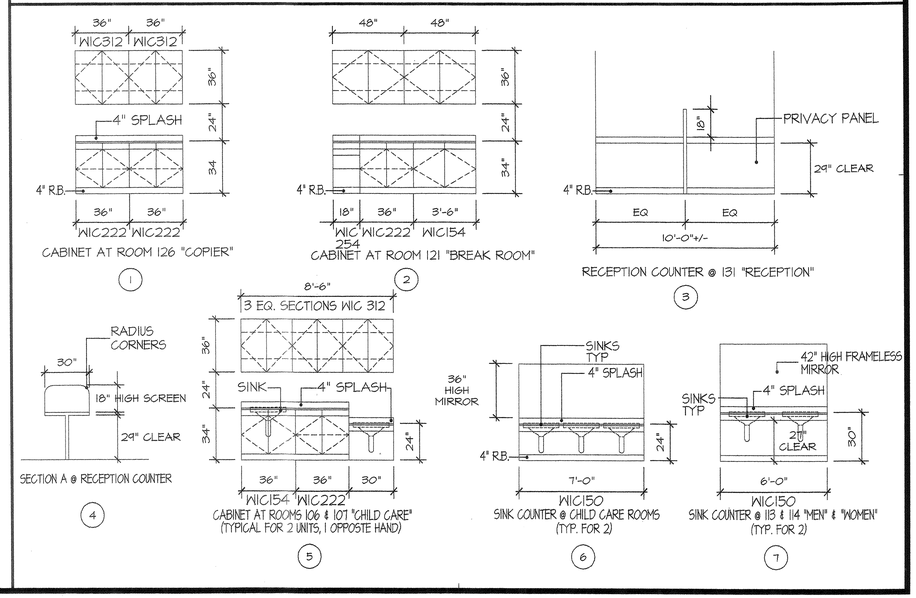

ARCHITECT:
LICENSED ARCHITECT DAVID KENNETH HIGGINSON NO. C19188 REN. 08/31/05 STATE OF CALIFORNIA

higginson + cartozian architects, inc.
architecture ◆ planning ◆ design
David Higginson, Architect
127 East State Street
Redlands, California 92373
ph. (909) 793-3100 fax (909) 793-3140

CONSULTANT:

1	REVISIONS
2	DATE: 12/04/03
3	DATE:

Arlanza Neighborhoods Initiative Project
Arlanza Youth & Family Resource Center
City of Riverside

SHEET TITLE: FLOOR PLAN

DRAWN BY: S.T.B.

CHECKED BY: D.K.C.

DATE: DECEMBER 2, 2003

SHEET NO:

A1.0

30202 / FP00-03

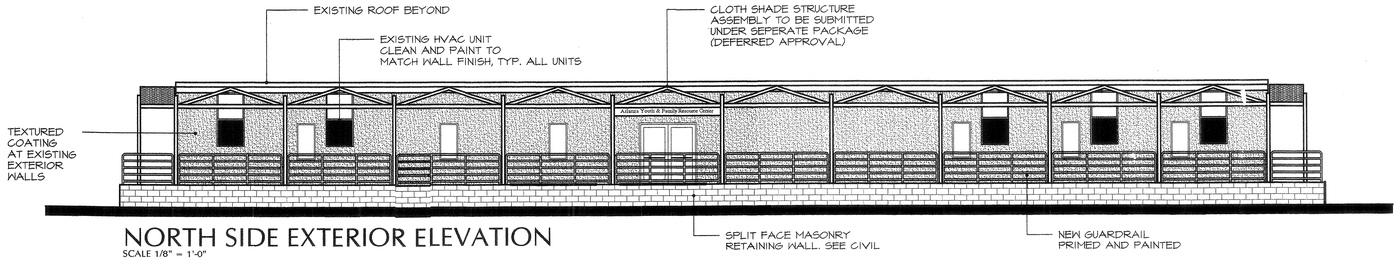

NORTH SIDE EXTERIOR ELEVATION

SCALE 1/8" = 1'-0"

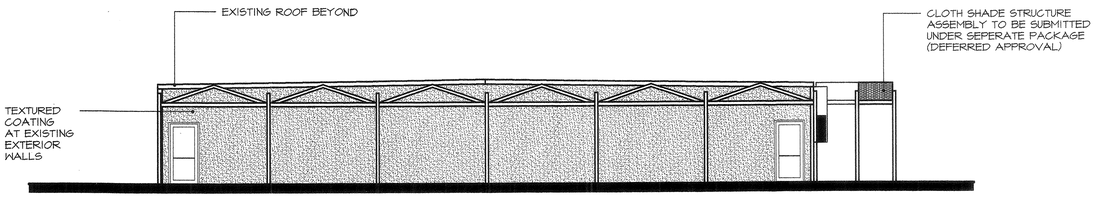

EAST SIDE EXTERIOR ELEVATION

SCALE 1/8" = 1'-0"

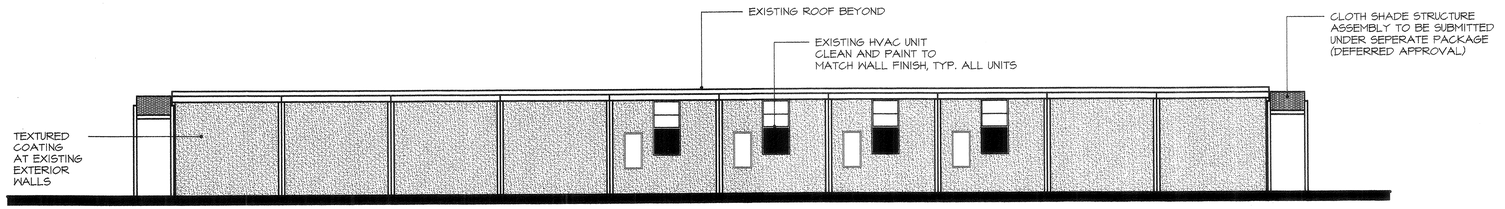

SOUTH SIDE EXTERIOR ELEVATION

SCALE 1/8" = 1'-0"

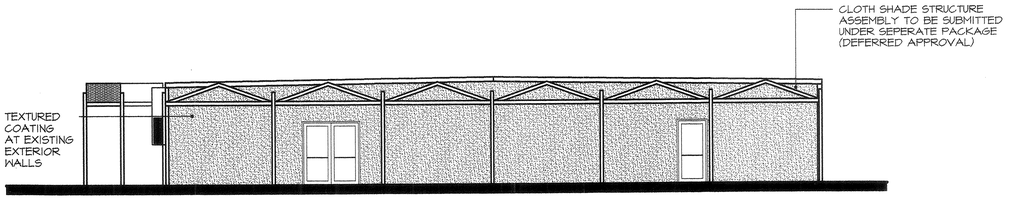

WEST SIDE EXTERIOR ELEVATION

SCALE 1/8" = 1'-0"

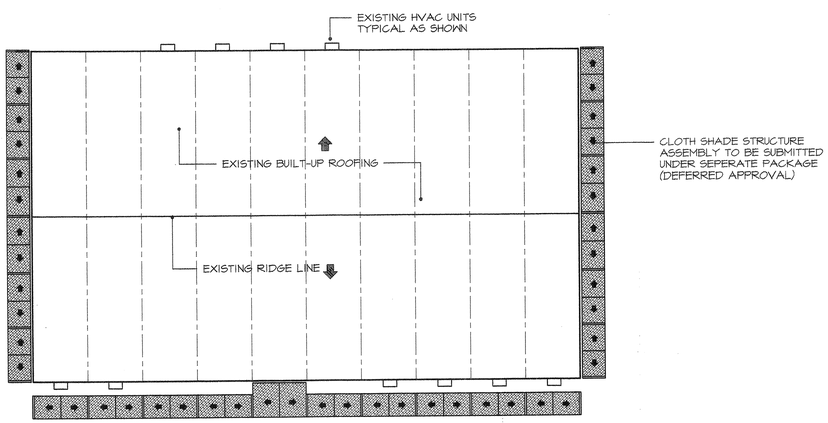

ROOF PLAN

SCALE: 1/16" = 1'-0"

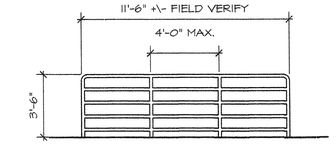

NOTE:
RAILING TO BE 1-1/2" DIA. SCHEDULE 40 GALV. STL. PIPE WELD ALL CONNECTIONS AND GRIND SMOOTH. SEE 15 A2.0 FOR MOUNTING

DETAIL	1 1/2"	5

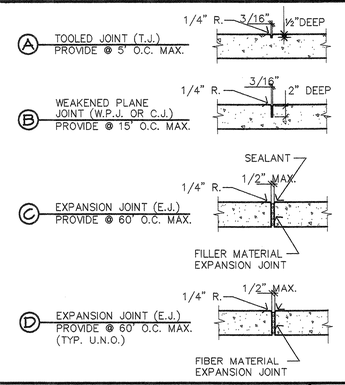

DETAIL	3"	10

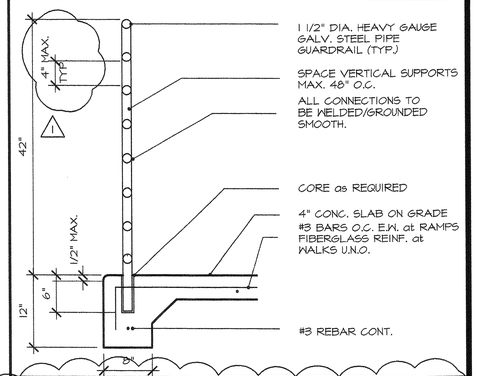

DETAIL	3"	15

ARCHITECT:
LICENSED ARCHITECT DAVID HIGGINSON NO. C19168 REN. 10-31-06 STATE OF CALIFORNIA

2	REVISIONS
1	DATE: 12/4/03
3	DATE:

higginson + cartozian architects, inc.
architecture ◆ planning ◆ design
David Higginson, Architect
127 East State Street
Redlands, California 92373
ph. (909) 793-3100 fax (909) 793-3140

CONSULTANT:

Arlanza Neighborhoods Initiative Project
Arlanza Youth & Family Resource Center
City of Riverside

SHEET TITLE:
EXTERIOR ELEVATIONS ROOF PLAN

DRAWN BY: DWH
CHECKED BY: DWH
DATE: July 29, 2003
SHEET NO:
A2.0

30202/arlanza-ee-3

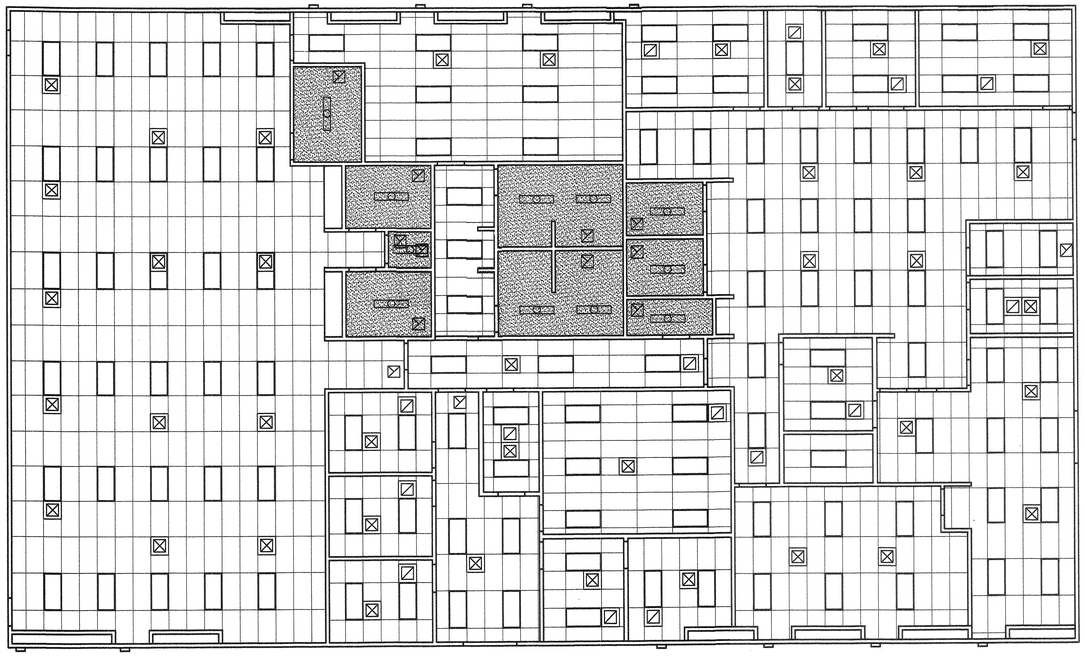

REFLECTED CEILING PLAN

SCALE 1/8" = 1'-0"

REFLECTED CEILING PLAN LEGEND:

- 2 X 4 T-BAR CEILING PANEL SEE DETAIL 5
- GYPSUM BOARD CEILING
- MECHANICAL DIFFUSER and GRILLES SEE MECH. PLANS
- 2 X 4 FLUOR LT. FIXTURE
- 1 X 4 FLUOR LT. FIXTURE
- RECESSED DOWN LIGHT

1. 12 GA. (MIN.) HANGER WIRES MAY BE USED FOR UP TO AND INCLUDING 4'-0" X 4'-0" GRID SPACING ALONG MAIN RUNNERS. SPLICES WILL NOT BE PERMITTED IN ANY HANGER UNLESS SPECIFICALLY APPROVED BY DSA/SSS.
2. PROVIDE 12 GA. HANGER WIRES AT ENDS OF ALL MAIN AND CROSS RUNNERS WITHIN 8" FROM THE SUPPORT OR ¼ OF THE LENGTH OF THE END TEE, WHICHEVER IS LEAST, FOR THE PERIMETER OF THE CEILING AREA. END CONNECTIONS FOR RUNNERS WHICH ARE DESIGNED AND DETAILED TO RESIST THE APPLIED HORIZONTAL FORCES MAY BE USED IN LIEU OF THE 12 GA. HANGER WIRES SUBJECT TO DSA/SSS REVIEW AND APPROVAL.
3. PROVIDE TRAPEZE OR OTHER SUPPLEMENTARY SUPPORT MEMBERS AT OBSTRUCTIONS TO MAIN HANGER SPACING.
4. PROVIDE ADDITIONAL HANGERS, STRUTS OR BRACES AS REQUIRED AT ALL CEILING BREAKS, SOFFITS OR DISCONTINUOUS AREAS. HANGER WIRES THAT ARE MORE THAN 1 TO 8 OUT OF PLUMB ARE TO HAVE COUNTERSLOPING WIRE.
5. CEILING GRID MAY BE ATTACHED TO 2 ADJACENT WALLS. THE CEILING MUST BE AT LEAST ½" FREE OF OTHER WALLS. IF WALLS RUN DIAGONALLY TO CEILING GRID SYSTEM RUNNERS, ONE END OF MAIN CROSS RUNNERS SHOULD BE FREE AND A MINIMUM OF ½" OF WALL.
6. AT THE PERIMETER OF THE CEILING AREA WHERE MAIN CROSS RUNNERS ARE NOT CONNECTED TO THE ADJACENT WALL, PROVIDE INTERCONNECTION BETWEEN THE RUNNERS AT THE FREE END TO PREVENT LATERAL SPREADING. A METAL STRUT OR A 15 GA. WIRE WITH A POSITIVE MECHANICAL CONNECTION TO THE RUNNER MAY BE USED. WHERE THE PURPENDICULAR DISTANCE FROM THE WALL TO THE FIRST PARALLEL RUNNER IS 12" OR LESS, THIS INTERLOCK IS NOT REQUIRED.
7. SET OF 4-12 GA. SPLAY WIRES SHALL BE PROVIDED FOR EACH 12 FEET BY 12 FEET ON CENTER UNLESS OTHER SPECIFICALLY DESIGNED AND DETAILED BRACING IS PROVIDED. FIRST SET OF SPLAY WIRES SHALL BE NO MORE THAN 6'-0" FROM ANY WALL.

   PROVIDE BRACING WIRES AT LOCATIONS NOT MORE THAN ½ THE SPACINGS FROM EACH PERIMETER WALL AND AT THE EDGE OF VERTICAL CEILING OFFSETS. THE SLOPE OF THESE WIRES SHOULD NOT EXCEED 45 DEGREES FROM THE PLANE OF THE CEILING AND SHOULD BE TAUT WITHOUT CAUSING THE CEILING TO LIFT. SPLICES IN BRACING WIRES ARE NOT TO BE PERMITTED WITHOUT SPECIAL DSA/SSS APPROVAL.
8. FASTEN HANGER WIRES AT NOT LESS THAN 3 TIGHT TURNS. FASETEN BRACING WIRES WITH 4 TIGHT TURNS. MAKE ALL TIGHT TURNS WITHIN A DISTANCE OF 1½ INCHES. HANGER OR BRACING WIRE ANCHORS TO THE STRUCTURE SHOULD BE INSTALLED IN SUCH A MANNER THAT THE DIRECTION OF THE WIRE ALIGNS AS CLOSELY AS POSSIBLE WITH THE DIRECTION OF THE FORCES ACTING ON THE WIRE.
9. SEPERATE ALL CEILING HANGING AND BRACING WIRES AT LEAST 6 INCHES FROM ALL DUCTS, PIPES, CONDUIT, ETC. IT IS ACCEPTABLE TO ATTACH LIGHT WEIGHT ITEMS, SUCH AS SINGLE ELECTRICAL CONDUIT NOT EXCEEDING ¾" NOMINAL DIAMETER, TO HANGER WIRES USING CONNECTORS ACCEPTABLE TO DSA/SSS.
10. ALL LIGHT FIXTURES TO BE ATTACHED SECURELY TO GRID WITH 4 SCREWS, ONE AT EACH CORNER. ATTACHMENT TO RESIST A HORIZONTAL FORCE EQUAL TO THE WEIGHT OF THE FIXTURE. GRID TO BE SUSPENDED AT ALL 4 CORNERS WITH 12 GA. WIRE.
11. ALL FLUSH OR RECESSED LIGHT FIXTURES AND AIR TERMINALS OR SERVICES IN INTERMEDIATE DUTY GRID MUST BE INDEPENDENTLY SUPPORTED BY NOT LESS THAN 4 TAUT 12 GA. WIRES INSTALLED BY MECHANICAL OR ELECTRICAL CONTRACTOR CAPABLE OF SUPPORTING 4 TIMES THE FIXTURE WEIGHT.
12. SURFACE MOUNTED LIGHT FIXTURES SHALL BE ATTACHED BY ELECTRICIAN USING AT LEAST TWO POSITIVE CLAMPING DEVICES MADE OF 14 GA. STEEL WHICH SURROUND THE CEILING RUNNER AND IS SUPPORTED BY THE STRUCTURE ABOVE WITH A 12 GA. WIRE INSTALLED BY THE ELECTRICAL CONTRACTOR. ROTATIONAL SPRING CLIPS ARE NOT ACCEPTABLE.
13. PENDANT MOUNTED LIGHT FIXTURES SHALL BE SUPPORTED DIRECTLY TO THE STRUCTURE ABOVE WITH HANGER WIRES THROUGH EACH PENDANT CAPABLE OF SUPPORTING 4 TIMES THE LOAD.
14. THE MECHANICAL CONTRACTOR TO SEPERATE AND BRACE ALL DUCTS, PIPES, AND WIRES THAT ARE WITHIN 6" OF THE CEILING SYSTEM'S WIRES TO MEET DSA REQUIREMENTS. THE MECHANICAL CONTRACTOR TO ATTACH ALL CEILING GRILLES TO GRID MEMBERS WITH A POSITIVE ATTACHMENT.
15. WHEN DRILLED-IN CONCRETE ANCHORS OR SHOT-IN ANCHORS ARE USED IN REINFORCED CONCRETE FOR HANGER WIRES, 1 OUT OF 10 MUST BE FIELD TESTED FOR 200 LBS. OF TENSION. WHEN DRILLED-IN CONCRETE ANCHORS ARE USED FOR BRACING WIRES, 1 OUT OF 2 MUST BE FIELD TESTED FOR 440 LBS. OF TENSION. SHOT-IN ANCHORS IN CONCRETE ARE NOT PERMITTED FOR BRACING WIRES. IF ANY SHOT-IN OR DRILLED-IN ANCHOR FAILS, ALL ADJACENT ANCHORS MUST BE TESTED.

   NOTE: DRILLED-IN OR SHOT-IN ANCHORS REQUIRE SPECIAL DSA/SSS APPROVAL WHEN USED IN PRESTRESSED CONCRETE.

   NOTE: THIS SYSTEM IS NOT DEFERRED. USE OF ALTERNATE METHODS, ONLY AS DETAILED IN THESE PLANS, AND/OR OTHER EQUAL PRODUCTS IS ALLOWED, IF APPROVED BY THE DIVISION OF STATE ARCHITECT.

T-GRID CEILING NOTES | 9

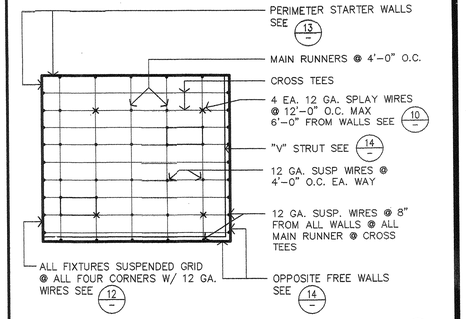

NOTE: SUSPENDED FIXTURE WITH 4-TAUT WIRES SEE NOTES 9 THRU 15 (9)

T-GRID LAYOUT | 5

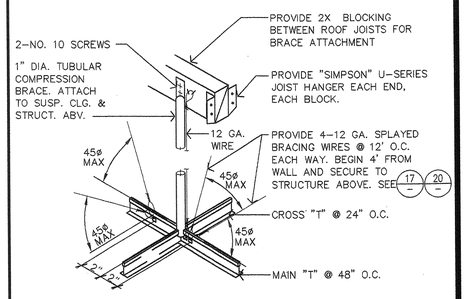

NOTE: ALL SPLAY WIRES @ SEISMIC BRACE MUST HAVE 4 TIGHT WRAPS MIN. WITHIN 1½" OF "T". ALL OTHER WIRES MUST HAVE 3 TIGHT WRAPS MIN.

SPLAY BRACING DETAIL | 10

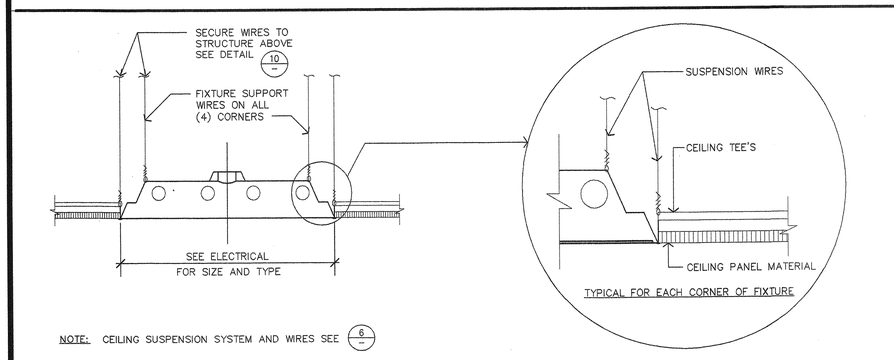

NOTE: CEILING SUSPENSION SYSTEM AND WIRES SEE (6)

LIGHT SUPPORT FIXTURE | NTS | 12

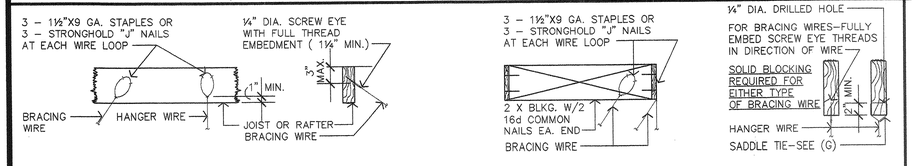

(A) WOOD JOIST OR RAFTER (B) AT WOOD JOIST OR RAFTER (C) AT WOOD JOIST OR BLOCK (D) TO BOTTOM OF JOIST

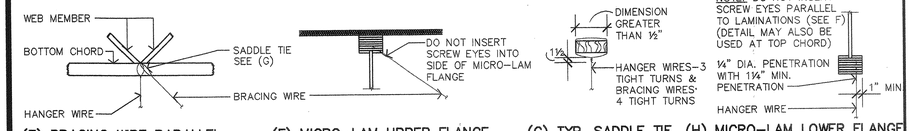

(E) BRACING WIRE PARALLEL TO WOOD TRUSS (F) MICRO-LAM UPPER FLANGE (G) TYP. SADDLE TIE (H) MICRO-LAM LOWER FLANGE

HANGER WIRE ATTACHMENT TO WOOD FRAMING | NTS

WALL ANGLE | HALF | 13

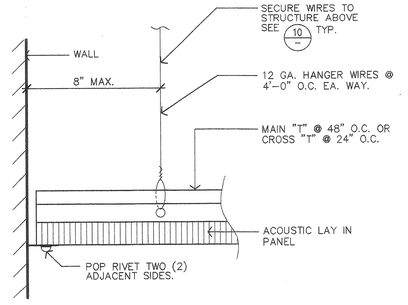

WALL ANGLE | 1 1/2" | 14

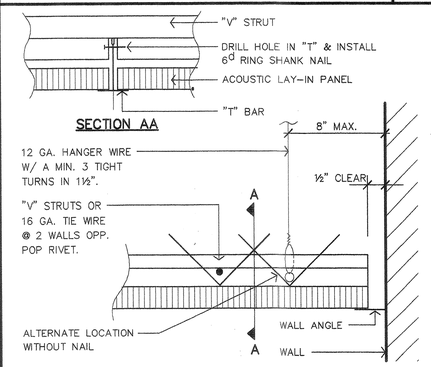

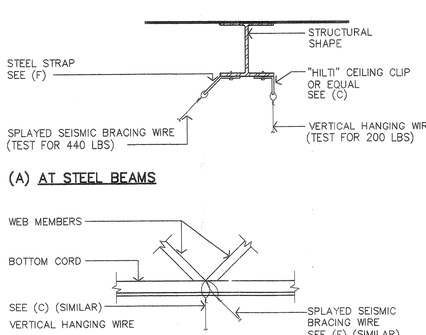

(A) AT STEEL BEAMS (D) AT OPEN-WEB STEEL JOIST

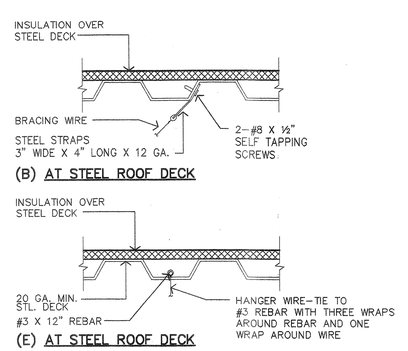

(B) AT STEEL ROOF DECK (E) AT STEEL ROOF DECK

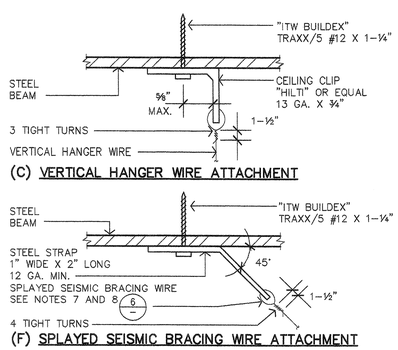

(C) VERTICAL HANGER WIRE ATTACHMENT (F) SPLAYED SEISMIC BRACING WIRE ATTACHMENT

HANGER WIRE ATTACHMENT TO STEEL FRAMING | NTS

ARCHITECT: DAVID HIGGINSON LICENSED ARCHITECT NO. C19108 EXP. 10-31-05 STATE OF CALIFORNIA

REVISIONS
DATE:
DATE:

higginson + cartozian architects, inc.
architecture ◆ planning ◆ design
David Higginson, Architect
127 East State Street
Redlands, California 92373
ph. (909) 793-3100 fax (909) 793-3140

CONSULTANT:

Arlanza Neighborhoods Initiative Project
Arlanza Youth & Family Resource Center
City of Riverside

SHEET TITLE: CEILING PLAN

DRAWN BY: S.T.B.
CHECKED BY: D.K.C.
DATE: MAY 1, 2002

SHEET NO: **A3.0**

70421 / TS00-02

LINTEL OPENING			
MAXIMUM ROUGH OPENING	4" WALL	LINTEL	6" WALL
UP TO 4'-0"	4x4		6x6
4'-1" TO 6'-0"	4x6		6x6
6'-1" TO 8'-0"	4x8		6x6
8'-1" TO 10'-0"	4x8		6x10

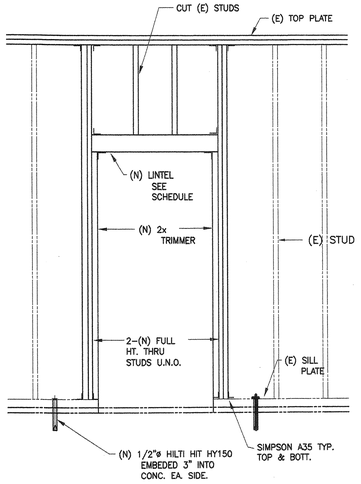

TYPICAL TRACK SPLICE

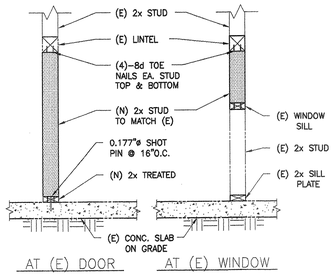

WALL INFILL | NTS | 2

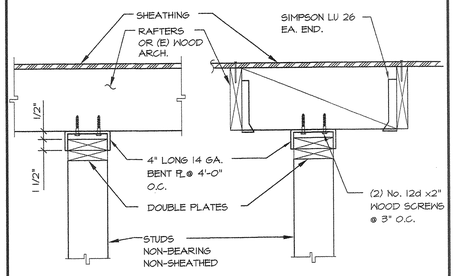

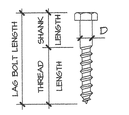

LAG BOLTS

- ALL LAG BOLTS SHALL BE INSTALLED IN PRE-DRILLED LEAD HOLE.
- LAG BOLTS SHALL BE TURNED BY A HAND WRENCH OR BY A POWER TORQUE WRENCH.
- LAG BOLTS SHALL NOT BE HAMMERED!!
- WHERE FULL THREAD BOLTS ARE INDICATED, PROVIDE LEAD HOLE FOR DIAM. "D" FOR FULL DEPTH.
- PROVIDE WASHER UNDER HEAD FOR BOLT HEAD IN CONTACT WITH WOOD.

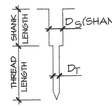

DIAM. "D"	LEAD HOLE	
	D_S	D_T
1/2"	1/2"	5/16"
5/8"	5/8"	7/16"
3/4"	3/4"	1/2"

LEAD HOLE

CONNECTION	NAILING
1. JOIST OR RAFTERS TO SIDES OF STUDS 8" JOIST OR LESS FOR EACH ADDITONAL 4" IN DEPTH OF JOIST	3–16d 1–16d
2. BRIDGING TO JOIST, TOENAIL EACH END A. BLOCKING BETWEEN JOIST OR RAFTERS–TO JOIST OR RAFTERS–TOENAIL EACH SIDE EACH END B. BLOCKING BETWEEN STUDS, EACH END	2–8d 2–10d TOENAILS OR 2–16d
3. SOLE PLATE TO JOIST OR BLOCKING, FACE NAIL	16d @16" O.C.
4. TOP PLATE TO STUD, END NAIL	2–16d
5. STUD TO SOLE PLATE	4–8, TOENAIL OR 2–16d END NAIL
6. DOUBLE STUDS, FACE NAIL	16d @24" O.C.
7. DOUBLE TOP PLATES, FACE NAIL	16d @16" O.C.
8. TOP PLATES , LAPS AND INTERSECTIONS, FACE NAIL	2–16d
9. CONTINUOUS HEADER, TWO PIECES	16d @24" O.C. ALONG EACH EDGE
10. CEILING JOIST TO PLATE, TOENAIL	3–8d
11. CONTINUOUS HEADER TO STUD, TOENAIL	4–8d
12. CEILING JOIST, LAPS OVER PARTITIONS, FACE NAIL	3–16d
13. CEILING JOIST TO PARALLEL RAFTERS, FACE NAIL	3–16d
14. JOIST OR RAFTERS TO ALL BEARINGS–TOENAILS, EACH SIDE	2–10d
15. 1"BRACE TO EACH STUD AND PLATE, FACE NAIL	2–8d
16. 1"x8" SHEATHIN OR LESS TO EACH BEARING, FACE NAIL	2–8d
17. WIDER THAN 1"x8" SHEATHING TO EACH BEARING, FACE NAIL	3–8d
18. BUILT–UP CORNER STUDS	16d@24"O.C.
19. 2" PLANKS FOR EACH ADDITONAL 4" IN DEPTH OF JOIST	2–16d AT EACH BEARING 1–16d
20. PLYWOOD 1/2" AND LESS 19/32"–3/4" 7/8"–1"	8d[2] 10d[2] 10d[2]
1 1/2"–1 1/4"	10d[3] OR 8d[4]
21. PANEL SIDING (TO FRAMING) 1/2" OR LESS 5/8"	6d[6] 8d[6]

[1]COMMON OR BOX NAILS MAY BE USED EXCEPT WHERE OTHERWISE STATED.

[2]COMMON OR DEFORMED SHANK.

[3]COMMON.

[4]COMMON SHANK.

[5]NAILS SPACED AT 6" OR CENTER AT EDGES, 12" AT INTERMEDIATE SUPPORTS EXCEPT 6" AT ALL SUPPORTS WHERE ARE 48" OR MORE. FOR NAILING OF PLYWOOD DIAPHRAGMS AND SHEAR WALLS, REFER TO SECTION 2314A. NAILS FOR WALL SHEATHING MAY BE COMMON, BOX OR CASING.

[6]CORROSION RESISTANT SIDING OR CASING NAILS CONFORMING TO THE REQUIREMENTS OF SECTION 2320A.7

[7]FASTENERS SPACED 3" ON CENTER AT EXTERIOR EDGES AND 6" ON CENTER AT INTERMEDIATE SUPPORTS.

[8]WHEN POSSIBLE, NAILS DRIVEN PERPENDICULAR TO THE GRAIN SHALL BE USED INSTEAD OF TOENAILS.

NAILING SCHEDULE | NTS | 9

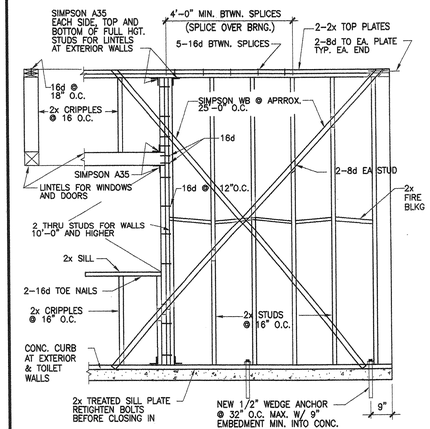

OPTIONAL SILL PLATE ANCHORAGE

(NOT APPLICABLE TO PLYWOOD SHEATHED WALLS)
SILL PLATES MAY BE ANCHORED BY USE OF 0.177"ø POWDER DRIVEN PINS @ 32" O.C. WITH A MINIMUM PENETRATION OF 1–1/2" INTO CONCRETE. OPTIONAL ANCHORS SHALL NOT BE USED IN CURBS OR ADJACENT TO DEPRESSED SLABS.

SAWN TIMBER: DOUGLAS FIR NO. 1 BLOCKING MAY BE D.F. NO. 2

STUD WALL FRAMING | NTS | 10

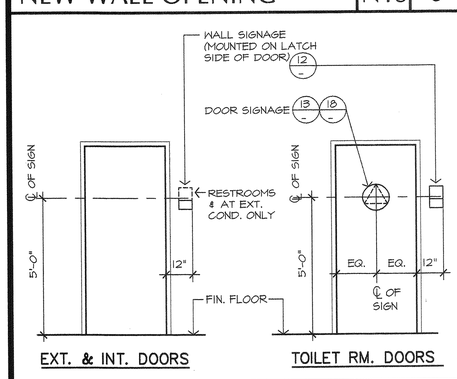

EXT. & INT. DOORS TOILET RM. DOORS

DOOR SIGN ELEV. | 3/8" | 11

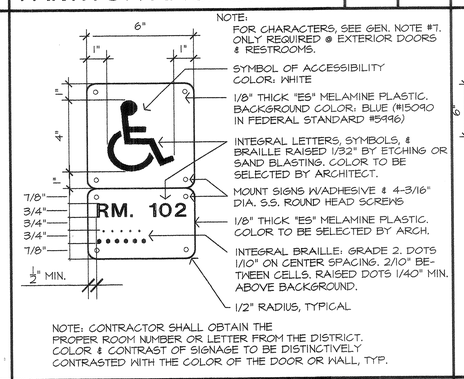

WALL SIGNAGE | 3" | 12

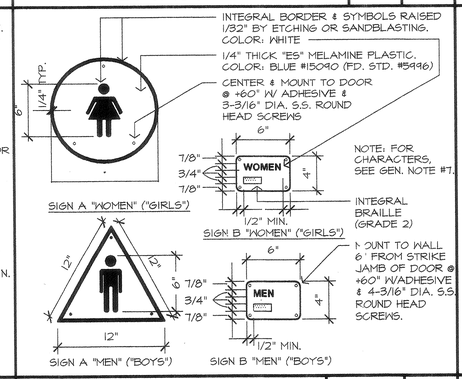

D.P. RESTRM. SIGNAGE | 1 1/2" | 13

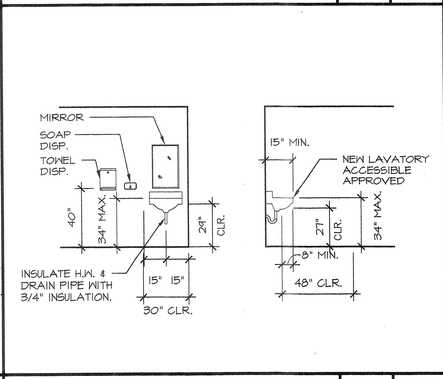

D.P. LAV. ELEV. | 1/4" | 14

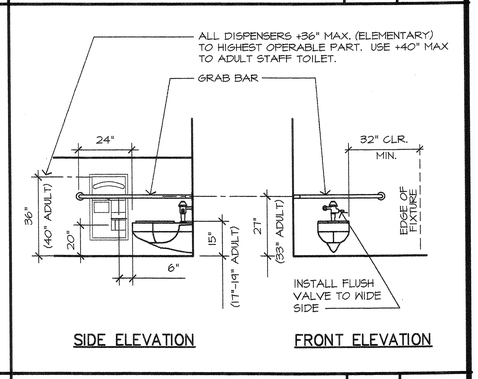

ACCESSIBLE TOILET | 3/8" | 15

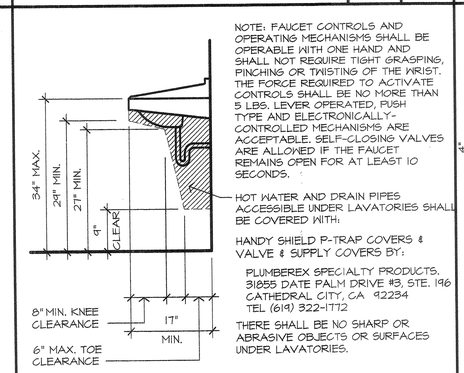

ADULT D.P. ACCESSIBLE LAV. | 3/4" | 17

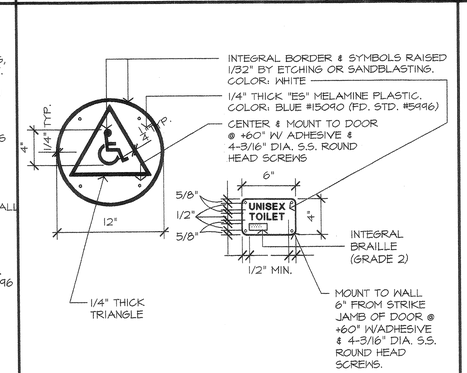

UNISEX R.R. SIGN | 1 1/2" | 18

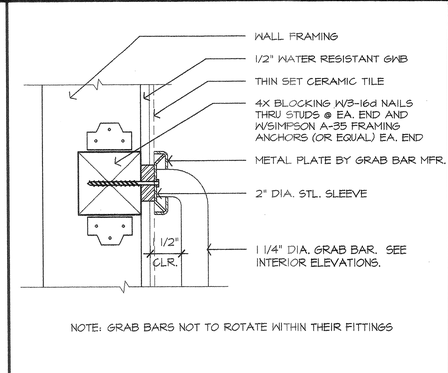

NOTE: GRAB BARS NOT TO ROTATE WITHIN THEIR FITTINGS

GRAB BAR ATTACHMENT | 3" | 19

APPROVALS

ARCHITECT:
LICENSED ARCHITECT DAVID W. HIGGINSON NO. C19168 REN. 10-31-05 STATE OF CALIFORNIA
higginson + cartozian architects, inc.
architecture ◆ planning ◆ design
David Higginson, Architect
127 East State Street
Redlands, California 92373
ph. (909) 793-3100 fax (909) 793-3140

REVISIONS
DATE: JUNE 25, 2003
DATE:

CONSULTANT:

Arflanza Neighborhoods Initiative Project
Arflanza Youth & Family Resource Center
City of Riverside

SHEET TITLE: DETAILS

DRAWN BY: D.W.H.
CHECKED BY: D.W.H.
DATE: DECEMBER 2, 2003

SHEET NO: **A4.0**

30202 / DTL–02A

DOOR SCHEDULE

DR. NO.	LOCATION	DOOR SIZE (E) = EXISTING TO REMAIN	THICK.	DR. TYPE	DOOR MATL	FRAME MATL	HEAD	JAMB	MULLION	TRANSOM	SILL	LABEL	SIGN	HDWE. SET	LOUVERS	REMARKS	DR. NO.
1	LOBBY	3'-0" x 7'-0" DBL	1 3/4"	C	HM	HM	-	-	-	-	-	-	-	1	-		1
2	CHILD CARE CENTER A	3'-0" x 7'-0"	1 3/4"	A	HM	HM	-	-	-	-	-	-	-	2	-		2
3	CHILD CARE CENTER B	3'-0" x 7'-0"	1 3/4"	A	HM	HM	-	-	-	-	-	-	-	2	-		3
4	OPEN OFFICE	3'-0" x 7'-0"	1 3/4"	A	HM	HM	-	-	-	-	-	-	-	3	-		4
5	W.I.C. WAITING	3'-0" x 7'-0" DBL	1 3/4"	C	HM	HM	-	-	-	-	-	-	-	1	-		5
6	COUNSELING ROOM	3'-0" x 7'-0"	1 3/4"	B	WD	TM	-	-	-	-	-	-	-	4	-	20 MINUTE LABEL	6
7	COUNSELING ROOM	3'-0" x 7'-0"	1 3/4"	B	WD	TM	-	-	-	-	-	-	-	4	-	20 MINUTE LABEL	7
8	SUPPLY/BREAK ROOM	3'-0" x 7'-0"	1 3/4"	B	WD	TM	-	-	-	-	-	-	-	5	-	20 MINUTE LABEL	8
9	LOBBY	3'-0" x 7'-0"	1 3/4"	B	WD	TM	-	-	-	-	-	-	-	6	-	20 MINUTE LABEL	9
10	SECURITY OFFICE	3'-0" x 7'-0"	1 3/4"	A	WD	TM	-	-	-	-	-	-	-	4	-	20 MINUTE LABEL	10
11	PARNTERS ROOM	3'-0" x 7'-0"	1 3/4"	B	WD	TM						-	-	4	-	20 MINUTE LABEL	11
12	ADMIN. ROOM	3'-0" x 7'-0"	1 3/4"	B	WD	TM	-	-	-	-	-	-	-	4	-	20 MINUTE LABEL	12
13	DIRECTORS OFFICE	3'-0" x 7'-0"	1 3/4"	B	WD	TM	-	-	-	-	-	-	-	8	-		13
14	TRAINING ROOM	3'-0" x 7'-0"	1 3/4"	B	WD	TM	-	-	-	-	-	-	-	7	-		14
15	PRINT ROOM	3'-0" x 7'-0"	1 3/4"	A	WD	TM	-	-	-	-	-	-	-	7	-		15
16	PRINT ROOM	3'-0" x 7'-0"	1 3/4"	A	WD	TM	-	-	-	-	-	-	-	7	-		16
17	W.I.C. WAITING	3'-0" x 7'-0"	1 3/4"	A	WD	TM	-	-	-	-	-	-	-	7	-		17
18	OPEN OFFICE	3'-0" X 7'-0"	1 3/4"	A	WD	TM	-	-	-	-	-	-	-	8	-		18
19	OPEN OFFICE	3'-0" x 7'-0"	1 3/4"	A	WD	TM	-	-	-	-	-	-	-	8	-		19
20	BREAST FEED ROOM	3'-0" x 7'-0"	1 3/4"	A	WD	TM	-	-	-	-	-	-	-	10	-		20
21	STORAGE SPACE	3'-0" x 7'-0"	1 3/4"	A	WD	TM	-	-	-	-	-	-	-	11	-		21
22	SENIOR NUTRITIONIST	3'-0" x 7'-0"	1 3/4"	B	WD	TM	-	-	-	-	-	-	-	7	-		22
23	DATA ROOM	3'-0" x 7'-0"	1 3/4"	A	WD	TM	-	-	-	-	-	-	-	11	-		23
24	BREAK ROOM	3'-0" x 7'-0"	1 3/4"	D	WD	TM	-	-	-	-	-	-	-	7	-		24
25	WOMEN'S RESTROOM	3'-0" x 7'-0"	1 3/4"	A	WD	TM	-	-	-	-	-	-	-	10	-	SIGN: "WOMEN" PER DETAIL	25
26	MEN'S RESTROOM	3'-0" x 7'-0"	1 3/4"	A	WD	TM	-	-	-	-	-	-	-	10	-	SIGN: "MEN" PER DETAIL	26
27	CUST.	3'-0" x 7'-0"	1 3/4"	B	WD	TM	-	-	-	-	-	-	-	5	-	20 MINUTE LABEL	27
28	OPEN OFFICE	3'-0" x 7'-0"	1 3/4"	B	WD	TM	-	-	-	-	-	-	-	6	-	20 MINUTE LABEL	28
29	WOMEN'S RESTROOM	3'-0" x 7'-0"	1 3/4"	A	WD	TM	-	-	-	-	-	-	-	12	-	20 MINUTE LABEL	29
30	MEN'S RESTROOM	3'-0" x 7'-0"	1 3/4"	A	WD	TM	-	-	-	-	-	-	-	12	-	20 MINUTE LABEL	30
31	CORRIDOR	3'-0" x 7'-0"	1 3/4"	A	WD	TM	-	-	-	-	-	-	-	6	-	20 MINUTE LABEL	31
32	CORRIDOR	3'-0" x 7'-0"	1 3/4"	B	WD	TM	-	-	-	-	-	-	-	6	-	60 MINUTE LABEL	32
33	GIRL'S RESTROOM	3'-0" x 7'-0"	1 3/4"	A	WD	TM	-	-	-	-	-	-	-	12	-	SIGN: "GIRLS" PER DETAIL	33
34	CUST.	3'-0" x 7'-0"	1 3/4"	D	WD	TM	-	-	-	-	-	-	-	11	-		34
35	BOY'S RESTROOM	3'-0" x 7'-0"	1 3/4"	A	WD	TM	-	-	-	-	-	-	-	12	-	SIGN: "BOYS" PER DETAIL	35
36	ELECTRICAL ROOM	3'-0" x 7'-0"	1 3/4"	A	WD	TM	-	-	-	-	-	-	-	5	-	60 MINUTE LABEL	36
37	TRAINING/CONF. ROOM	3'-0" x 7'-0"	1 3/4"	A	WD	TM								9		60 MINUTE LABEL	37
38	VOUCHER VAULT	3'-0" x 7'-0"	1 3/4"	A	WD	TM								5		20 MINUTE LABEL	

DOOR NOTES

1. MOUNT ALL FLOOR STOPS/HOLDERS WITHIN 4" OF WALL. SEE SPECIFICATIONS FOR A THOROUGH DESCRIPTION OF OTHER DOOR HARDWARE.
2. NOT USED
3. VERIFY VERBAGE WITH CITY PRIOR TO FABRICATION OF ALL DOOR SIGNAGE.
4. FIRE-RATED DOOR FRAMES SHALL BE INSTALLED IN ACCORDANCE WITH THE MANUFACTURER'S INSTRUCTIONS. MANUFACTURER'S INSTRUCTIONS SHALL BE MADE AVAILABLE TO INSPECTING AUTHORITIES.
5. PAINT ALL (E) UTILITY ACCESS PANEL DOORS TO MATCH EXISTING ADJACENT SURFACES.
6. SOUNDPROOF DOORS TO HAVE AN STC OF 36.

ABBRV. LEGEND
HM - HOLLOW METAL
WD - WOOD - SOLID CORE
TM - TIMELY DOOR FRAME

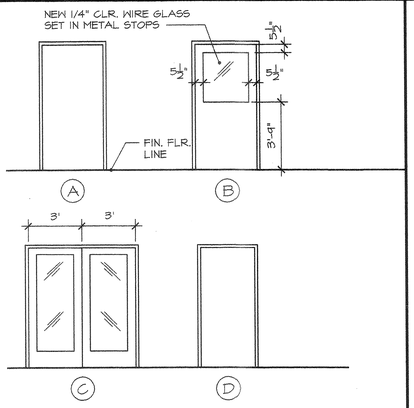

HARDWARE SETS
1 - PANIC HARDWARE SET
2 - OFFICE STYLE LOCKSET
3 - PRIVACY STYLE LOCKSET
4 - PASSAGE STYLE LOCKSET
5 - UTILITY STYLE LOCKSET

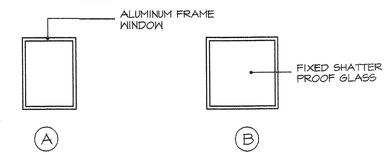

DOOR TYPES

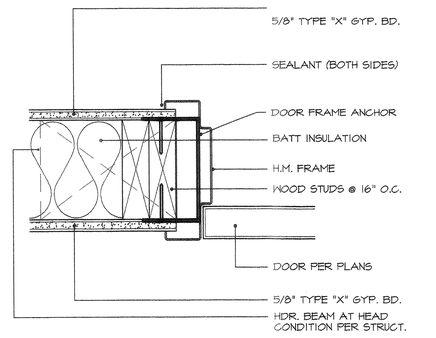

WINDOW TYPES | 1/4" | 10

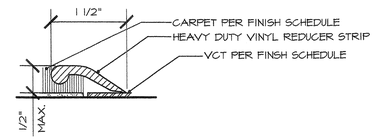

HEAD/JAMB @ INT R.R. DR. | 3" | 14

THRESHOLD @ RESTROOMS | 3" | 15

HEAD/JAMB @ INT. DOOR | 3" | 19

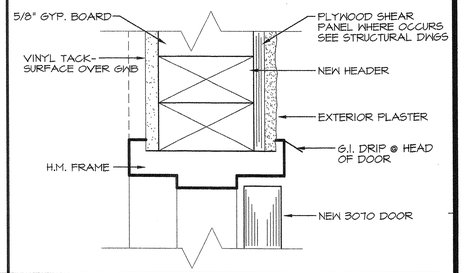

JAMB @ EXT. DOOR | 3" | 21

FRAME TYPES | | 20

APPROVALS

ARCHITECT:

REVISIONS
DATE: 12/04/03
DATE:

higginson + cartozian architects, inc.
architecture ◆ planning ◆ design
David Higginson, Architect
127 East State Street
Redlands, California 92373
ph. (909) 793-3100 fax (909) 793-3140

CONSULTANT:

Arlanza Neighborhoods Initiative Project
Arlanza Youth & Family Resource Center
City of Riverside

SHEET TITLE:
DOOR & WINDOW SCHEDULES

DRAWN BY: S.T.B.
CHECKED BY: D.K.C.
DATE: MAY 1, 2002

SHEET NO:
A5.0

30202 / 0500-00

ROOM NO.	ROOM NAME	FLOOR		BASE		WAINSCOT		NORTH WALL			EAST WALL			SOUTH WALL			WEST WALL			CEILING				REF. SHT.	ROOM NO.	ROOM NAME	NOTES & REMARKS
		MATL.	COLOR	MATL.	COLOR	MATL.	COLOR	MATL.	FIN.	COLOR	MATL.	FIN.	COLOR	MATL.	FIN.	COLOR	MATL.	FIN.	COLOR	MATL.	FIN.	COLOR	HT.				
101	LOBBY	CPT		R	-	-	-	GWB	PSG	-	GWB	PSG	-	GWB	PSG	-	GWB	PSG	-	ACT	X	(E)	9'		101	LOBBY	
102	SECURITY	CPT		R	-	-	-	GWB	PSG	-	GWB	PSG	-	GWB	PSG	-	GWB	PSG	-	ACT	X	(E)	9'		102	SECURITY	
103	COUNSELING ROOM	CPT		R	-	-	-	GWB	PSG	-	GWB	PSG	-	GWB	PSG	-	GWB	PSG	-	ACT	X	(E)	9'		103	COUNSELING ROOM	
104	COUNSELING ROOM	CPT		R	-	-	-	GWB	PSG	-	GWB	PSG	-	GWB	PSG	-	GWB	PSG	-	ACT	X	CG-2	9'		104	COUNSELING ROOM	
105	SUPPLY/BREAK ROOM	CPT		R	-	-	-	GWB	PSG	-	GWB	PSG	-	GWB	PSG	-	GWB	PSG	-	ACT	X	CG-2	9'		105	SUPPLY/BREAK ROOM	
106	CHILD CARE CENTER A	CPT/ VCT		R	-	-	-	GWB	PSG	-	GWB	PSG	-	GWB	PSG	-	GWB	PSG	-	ACT	X	CG-2	9'		106	CHILD CARE CENTER A	
107	CHILD CARE CENTER B	CPT/ VCT		R	-	-	-	GWB	PSG	-	GWB	PSG	-	GWB	PSG	-	GWB	PSG	-	ACT	X	CG-2	9'		107	CHILD CARE CENTER B	
108	GIRLS RESTROOM	SRF		SRF	-	-	-	GWW	FRP	-	GWW	FRP	-	GWW	FRP	-	GWW	FRP	-	GWB	PSG	(E)	8'		108	GIRLS RESTROOM	
109	CUSTODIAN	SRF		SRF	-	-	-	GWW	FRP	-	GWW	FRP	-	GWW	FRP	-	GWW	FRP	-	GWB	PSG	(E)	8'		109	CUSTODIAN	
110	BOYS RESTROOM	SRF		SRF	-	-	-	GWW	FRP	-	GWW	FRP	-	GWW	FRP	-	GWW	FRP	-	GWB	PSG	(E)	8'		110	BOYS RESTROOM	
111	ELECTRICAL ROOM	VCT		R	-	-	-	GWB	PSG	-	GWB	PSG	-	GWB	PSG	-	GWB	PSG	-	GWB	PSG	(E)	9'		111	ELECTRICAL ROOM	
112	TRAINING/CONF. ROOM	CPT		R	-	-	-	GWB	PSG	-	GWB	PSG	-	GWB	PSG	-	GWB	PSG	-	ACT	X	(E)	9'		112	TRAINING/CONF. ROOM	
113	MENS RESTROOM	SRF		SRF	-	-	-	GWW	FRP	-	GWW	FRP	-	GWW	FRP	-	GWW	FRP	-	GWB	PSG	SD	8'		113	MENS RESTROOM	
114	WOMENS RESTROOM	SRF		SRF	-	-	-	GWW	FRP	-	GWW	FRP	-	GWW	FRP	-	GWW	FRP	-	GWB	PSG	SD	8'		114	WOMENS RESTROOM	
115	CORRIDOR	CPT		R	-	-	-	GWB	PSG	-	GWB	PSG	-	GWB	PSG	-	GWB	PSG	-	GWB	PSG	(E)	9'		115	CORRIDOR	
116	CORRIDOR	CPT		R	-	-	-	GWB	PSG	-	GWB	PSG	-	GWB	PSG	-	GWB	PSG	-	GWB	PSG	(E)	9'		116	CORRIDOR	
117	CUSTODIAN	SRF		R	-	-	-	GWB	PSG	-	GWB	PSG	-	GWB	PSG	-	GWB	PSG	-	GWB	PSG	CG-2	8'		117	CUSTODIAN	
118	MENS TOILET	SRF		R	-	-	-	GWW	FRP	-	GWW	FRP	-	GWW	FRP	-	GWW	FRP	-	GWB	PSG	CG-2	8'		118	MENS TOILET	
119	WOMENS TOILET	SRF		R	-	-	-	GWW	FRP	-	GWW	FRP	-	GWW	FRP	-	GWW	FRP	-	GWB	PSG	(E)	8'		119	WOMENS TOILET	
120	NUTRITIONIST	CPT		R	-	-	-	GWB	PSG	-	GWB	PSG	-	GWB	PSG	-	GWB	PSG	-	ACT	X	SD	9'		120	NUTRITIONIST	
121	BREAKROOM	VCT		R	-	-	-	GWB	PSG	-	GWB	PSG	-	GWB	PSG	-	GWB	PSG	-	ACT	X	(E)	9'		121	BREAKROOM	
122	DATA ROOM	VCT		R	-	-	-	GWB	PSG	-	GWB	PSG	-	GWB	PSG	-	GWB	PSG	-	GWB	PSG	CG-2	9'		122	DATA ROOM	
123	SENIOR NUTRITIONIST	CPT		R	-	-	-	GWB	PSG	-	GWB	PSG	-	GWB	PSG	-	GWB	PSG	-	ACT	X	(E)	9'		123	SENIOR NUTRITIONIST	
124	STORAGE SPACE	VCT		R	-	-	-	GWB	PSG	-	GWB	PSG	-	GWB	PSG	-	GWB	PSG	-	ACT	X	(E)	9'		124	STORAGE SPACE	
125	OPEN OFFICE	CPT		R	-	-	-	GWB	PSG	-	GWB	PSG	-	GWB	PSG	-	GWB	PSG	-	ACT	X	(E)	9'		125	OPEN OFFICE	
126	COPIER	CPT		R	-	-	-	GWB	PSG	-	GWB	PSG		GWB	PSG		GWB	PSG		GWB	PSG		9'		126	COPIER	
127	BREAST FEED ROOM	CPT		R	-	-	-	GWB	PSG	-	GWB	PSG		GWB	PSG		GWB	PSG		GWB	PSG		9'		127	BREAST FEED ROOM	
128	OPEN OFFICE	CPT		R	-	-	-	GWB	PSG	-	GWB	PSG	-	GWB	PSG	-	GWB	PSG	-	ACT	X	CEILING WHITE	9'		128	OPEN OFFICE	
129	PRINT ROOM	CPT		R	-	-	-	GWB	PSG	-	GWB	PSG	-	GWB	PSG	-	GWB	PSG	-	ACT	X	CEILING WHITE	9'		129	PRINT ROOM	
130	VOUCHER VAULT	CPT		R	-	-	-	GWB	PSG	-	GWB	PSG	-	GWB	PSG	-	GWB	PSG	-	ACT	X	CEILING WHITE	9'		130	VOUCHER VAULT	
131	RECEPTION	CPT		R	-	-	-	GWB	PSG	-	GWB	PSG	-	GWB	PSG	-	GWB	PSG	-	ACT	X	CEILING WHITE	9'		131	RECEPTION	
132	W.I.C. WAITING	CPT		R	-	-	-	GWB	PSG	-	GWB	PSG	-	GWB	PSG	-	GWB	PSG	-	ACT	X	CEILING WHITE	9'		132	W.I.C. WAITING	
133	OPEN OFFICE	CPT		R	-	-	-	GWB	PSG	-	GWB	PSG	-	GWB	PSG	-	GWB	PSG	-	ACT	X	CEILING WHITE	9'		133	OPEN OFFICE	
134	TRAINING ROOM	CPT		R	-	-	-	GWB	PSG	-	GWB	PSG	-	GWB	PSG	-	GWB	PSG	-	ACT	X	MATCH EXIST.	9'		134	TRAINING ROOM	
135	PARTNERS ROOM	CPT		R	-	-	-	GWB	PSG	-	GWB	PSG	-	GWB	PSG	-	GWB	PSG	-	ACT	X	(E)	9'		135	PARTNERS ROOM	
136	DIRECTORS OFFICE	CPT		R	-	-	-	GWB	PSG	-	GWB	PSG	-	GWB	PSG	-	GWB	PSG	-	ACT	X	(E)	9'		136	DIRECTORS OFFICE	
137	ADMINISTRATIVE ASST.	CPT		R	-	-	-	GWB	PSG	-	GWB	PSG	-	GWB	PSG	-	GWB	PSG	-	GWB	PSG	(E)	9'		137	ADMINISTRATIVE ASST.	

NOTE:

1. FLOOR FINISH TO RUN UNDER ALL CASEWORK.
2. WHERE OCCURS, SCHEDULED BASE SHALL RUN CONTINUOUS AT BASE OF ALL CASEWORK (I.C.) OR (N.I.C.)

FINISH SCHEDULE — 15

ABBREVIATIONS — 18

ACT	ACOUSTICAL TILE
CB	COVE BASE
CONC	CONCRETE
CPT	CARPET
CT	CERAMIC TILE
E-PLAST	EXTERIOR PLASTER
GWB	GYPSUM WALL BOARD
GWW	GYPSUM WALL BOARD/ WATER RESISTANT
LOS	OIL STAIN W/ VARNISH (@ PLYWOOD)
NAT	NATURAL
PART	MOVABLE WALL/ PARTITION
PE	PAINT, EGGSHELL
PF	PAINT, FLAT
PLAST	GYPSUM PLASTER
PSG	PAINT, SEMI-GLOSS
R	RUBBER
RSF	RESILIENT FLOORING
SM	SMOOTH
T-BAR	SUSPENDED T-BAR GRID/CEILING
TS	TACK SURFACE
VCT	VINYL COMPOSITE TILE
X	FACTORY FINISH
FRP	FIBER RESISTANT PANELS

NOTE: SEE FINISH LEGEND THIS SHEET

COLOR LEGEND — 19

P-1	PAINT: INT. WALLS:
P-2	PAINT: EXT. & INT. DOORS:
P-3	PAINT: DOORFRAMES:
CT-1	CERAMIC FLOOR TILE:
CT-2	CERAMIC WALL TILE:
GROUT	CUSTOM BUILDING PRODUCTS -
B-1	TOP SET RUBBER BASE: BURKE -
VCT-1	VINYL COMP. TILE: ARMSTRONG -
TS-1	TACKSURFACE - KOROSEAL, HARBORWEAVE
PLAM-1	WILSONART (COUNTERTOP) FUSION MAPLE #7904-60
G-1	GLASS: PPG, PLATE GLASS
CG-1	CEILING TILE: ARMSTRONG, FINE FISSURED SECOND LOOK IV WITH SUPRAFINE 9/16" EXPOSED TEE GRID W/ HUMIGUARD PLUS, 24"X48", WHITE
SO	TO BE SELECTED BY OWNER

APPROVALS

ARCHITECT:
LICENSED ARCHITECT DAVID A. HIGGINSON NO. C15108 STATE OF CALIFORNIA

1	REVISIONS
2	DATE:
3	DATE:

higginson + cartozian architects, inc.
architecture ◆ planning ◆ design
David Higginson, Architect
127 East State Street
Redlands, California 92373
ph. (909) 793-3100 fax (909) 793-3140

CONSULTANT:

Arlanza Neighborhoods Initiative Project
Arlanza Youth & Family Resource Center
City of Riverside

SHEET TITLE: FINISH SCHD

DRAWN BY: A.D.C.
CHECKED BY: D.K.C.
DATE: MAY 1, 2002

SHEET NO: A6.0

30202 / FS00-01

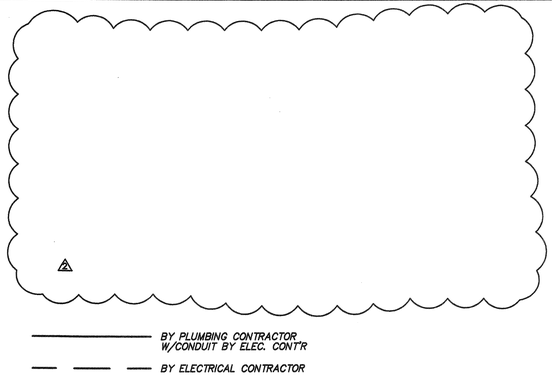

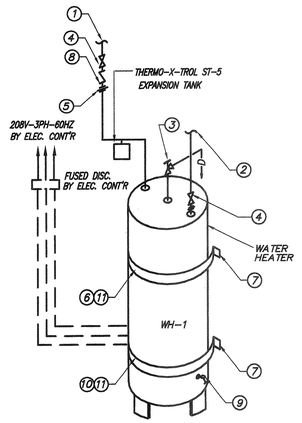

NOTES:

1. CW FROM SYSTEM
2. H.W. TO SYSTEM
3. "ASME" PRESSURE & TEMP RELIEF VALVE W/FULL SIZE DRAIN PIPED TO APPROVED RECEPTOR
4. LINE SIZE S.O.V.
5. UNION (TYPICAL)
6. LOCATE AT TOP 1/3 OF TANK
7. ANCHOR TO STUD, 2" EMBEDMENT
8. LINE SIZE CHECK VALVE
9. DRAIN COCK (HOSE END)
10. LOCATE AT BOTTOM 1/3 OF TANK
11. 1 1/2" WIDE 16 GA. SHT MTL W/ 3/8" x 2" LAG BOLT EA SIDE

WATER HEATER DETAIL

NOT TO SCALE | 1

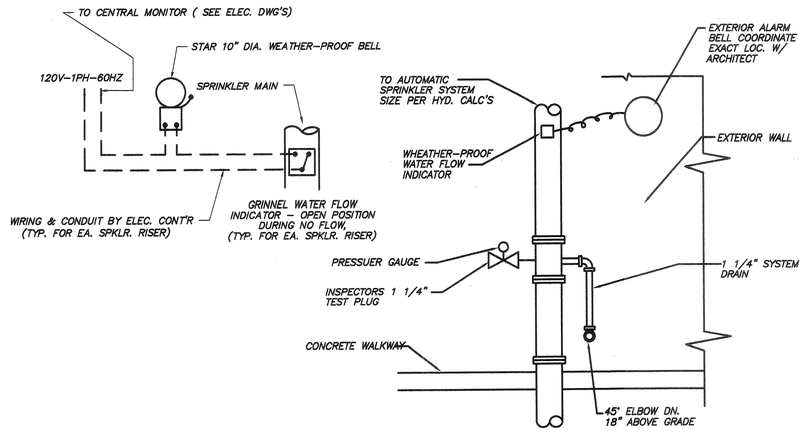

FIRE SPRINKLER RISER AND ALARM WIRING DIAGRAM

NOT TO SCALE | 2

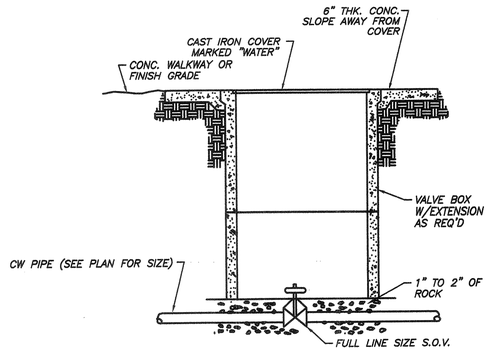

VALVE BOX DETAIL

NOT TO SCALE | 3

FIXTURE SCHEDULE

SYMBOL	FIXTURE	BRANCH CONNECTION WASTE	VENT	TRAP	HOT	COLD	DESCRIPTION
WC 1	WATER CLOSET	4"	2"	INT.	–	1 1/2"	FLR. MTD. HANDICAPPED
WC 2	WATER CLOSET	4"	2"	INT.	–	1 1/2"	FLR. MTD.
WC 3	WATER CLOSET	4"	2"	INT.	–	1 1/2"	FLR. MTD. , CHILD
L 1	LAVATORY	2"	1 1/2"	1 1/2"	1/2"	1/2"	COUNTER HANDICAPPED
L 2	LAVATORY	2"	1 1/2"	1 1/2"	1/2"	1/2"	COUNTER
L 3	LAVATORY	2"	1 1/2"	1 1/2"	1/2"	1/2"	WALL HANDICAPPED
L 4	LAVATORY	2"	1 1/2"	1 1/2"	–	1/2"	COUNTER HANDICAPPED, FITTED FOR CW ONLY
MS 1	MOP SINK	3"	2"	3"	3/4"	3/4"	
U 1	URINAL	2"	1 1/2"	INT.	–	1 1/4"	WALL MTD., HANDICAPPED
S 1	SINK	2"	1 1/2"	1 1/2"	–	1/2"	COUNTER, FITTED FOR CW ONLY
S 2	SINK	2"	1 1/2"	1 1/2"	1/2"	1/2"	COUNTER
FD 1	FLOOR DRAIN	2"	1 1/2"	2"	–	–	PROVIDE TRAP PRIMER, TUBING AND ACCESS PANEL
FS 1	FLOOR SINK	2"	1 1/2"	2"	–	–	PROVIDE TRAP PRIMER, TUBING AND ACCESS PANEL
DF 1	DRINKING FOUNTAIN	2"	1 1/2"	1 1/2"	–	1/2"	BI-LEVEL ACCESSIBLE TWO SETS OF PIPING CONN'S

EQUIPMENT SCHEDULE

WH 1 — "A.O. SMITH" DEN-30, 30 GAL. ELECTRIC WATER HEATER, TWO 3000 W. SIMULTANEOUS ELEMENTS, 208V-3PH-60 HZ.

2

HB 1 — "ACORN" 8121 HOSE BIBB W/VACCUM BREAKER

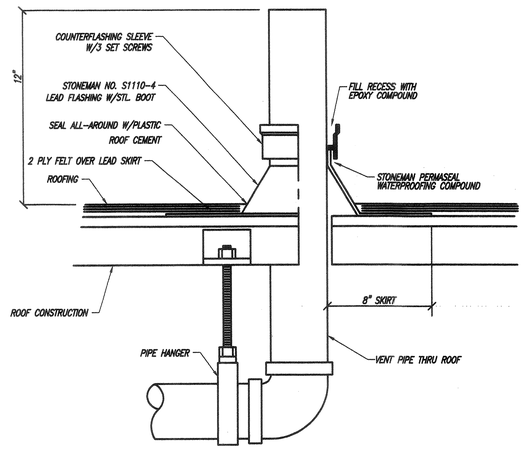

VENT THRU ROOF

NOT TO SCALE | 4

ELLER & ASSOCIATES
MECHANICAL CONSULTANTS
11680 DODD ST. YUCAIPA, CA. 92399
TEL. (909) 790-9140 FAX. (909) 790-6236

PLUMBING LEGEND

SYMBOL	ABBREV	DESCRIPTION
	W	WASTE BELOW FLOOR OR GRADE
	W	WASTE ABOVE FLOOR
	V	VENT LINE
	CW	COLD WATER
	HW	HOT WATER (110 DEGREES)
	HWR	HOT WATER RETURN
F	F	FIRE SPRINKLER LINE
	WHA	WATER HAMMER ARRESTER
		CAP OR PLUG
	WCO	WALL CLEANOUT
	CO	CLEANOUT
	SOV	SHUT OFF VALVE
	CV	CHECK VALVE
	B.C.	BALANCING COCK
	A.F.F.	ABOVE FINISH FLOOR
	BEL.	BELOW
	TYP.	TYPICAL

GENERAL NOTES

1. BEFORE COMMENCEMENT OF WORK, THE CONTRACTOR SHALL VERIFY THE EXACT LOCATIONS, ELEVATIONS AND CHARACTERISTICS OF ALL EXIST. UTILITIES AND PIPING, AND SHALL IMMEDIATELY NOTIFY THE ARCHITECT OF ANY DISCREPANCIES.
2. EXACT LOCATIONS AND MOUNTING HEIGHTS OF PLUMBING FIXTURES SHALL BE OBTAINED FROM THE ARCHITECTURAL DRAWINGS.
3. SEE ARCHITECTURAL DRAWINGS FOR HANDICAP FIXTURE LOCATIONS AND MOUNTING HEIGHTS.
4. FURNISH AND INSTALL A GATE VALVE, PLUG COCK OR STOP AT EACH PIECE OF EQUIPMENT FURNISHED BY OTHERS REQUIRING DRAIN, WASTE, WATER, ETC.
5. VERIFY ALL FIXTURE HEIGHTS PRIOR TO ROUGH-IN.
6. THE TERM "N.I.P.C." IS USED TO INDICATE THAT EQUIPMENT, FIXTURE, SERVICE, ETC., ONLY, IS NOT IN PLUMBING CONTRACT. INSTALLATION, TRIM AND CONN. OF THE EQUIPMENT IS BY THE PLUMBING CONTRACTOR.
7. FOR EXACT LOCATION OF MECHANICAL, OWNER FURNISHED, AND ALL OTHER EQUIPMENT, SEE MECHANICAL AND ARCHITECTURAL DRAWINGS.
8. INSTALL ALL PLUMBING TO AVOID INTERFERENCE WITH MECHANICAL, ELECTRICAL AND OTHER EQUIPMENT, WHERE REQUIRED, OFFSET PIPING TO CLEAR BEAMS, ETC.
9. SEAL AND FLASH ALL PENETRATIONS THROUGH ROOF WATERTIGHT.

FIRE PROTECTION NOTES

1. PROVIDE AN NEW AUTOMATIC FIRE SPRINKLER SYSTEM FOR THE ENTIRE BUILDING AND ALL BUILDING OVERHANGS SHOWN ON PLAN. PROVIDE HYDRAULIC CALC'S (IF REQ'D) AND SHOP DRAWINGS WHICH SHALL INCLUDE A REFLECTED CLG. PLAN WITH SPRINKLER HEAD LOCATIONS AND SUBMIT THEM TO THE ARCHITECT PRIOR TO INSTALLATION.
2. THE AUTOMATIC SPRINKLER SYSTEM SHALL CONFORM TO THE REQUIREMENTS OF THE 1989 EDITION OF NFPA PAMPHLET #13. PENETRATIONS OF RATED ASSEMBLIES SHALL BE FIRE-STOPPED. FIRE STOPPING SHALL BE AN APPROVED MATERIAL AS PRESCRIBED IN CALIFORNIA STATE FIRE MARSHAL STANDARD 43-1. INSTALLATION OF THE SPRINKLER SYSTEM SHALL NOT BE STARTED UNTIL COMPLETE PLANS AND SPECIFICATIONS (INCLUDING WATER SUPPLY INFORMATION AND TYPE OF EXISTING SPRINKLER SYSTEM, IF ANY) HAVE BEEN APPROVED BY THE LOCAL FIRE MARSHALL. A SCHEDULE OF INSPECTIONS & TESTS SHALL BE OBTAINED FROM THE FIRE MARSHALL, PRIOR TO CONSTRUCTION. THE SYSTEM SHALL BE TESTED IN THE PRESENCE OF THE ENFORCING AGENCY.
3. THE SYSTEM SHALL BE TESTED AT CONSTRUCTION STAGES REQ'D BY THE FIRE MARSHALL AND IN HIS PRESENCE.
4. THE WORK OF THIS SECTION SHALL BE INSTALLED ONLY UNDER SUPERVISION AND CONTROL OF A LICENSED FIRE SPRINKLER FIRM.
5. APPLY AND PAY FOR ALL PERMITS, FEES, INSPECTIONS, EXAMINATIONS AND TESTS REQUIRED BY AUTHORITY HAVING JURISDICTION.
6. MATERIALS, WORKMANSHIP, TESTS AND INSPECTIONS SHALL COMPLY WITH THE REQUIREMENTS OF THE 1989 EDITION OF N.F.P.A. 13, INSURANCE CARRIER, AND LOCAL FIRE DEPARTMENT.

APPROVALS

ARCHITECT: LICENSED ARCHITECT DAVID J. HIGGINSON NO. C19168 REN. 10-31-05 STATE OF CALIFORNIA

3	REVISIONS
2	DATE:
1	DATE: 01/09/04

higginson + cartozian architects, inc.
architecture ◆ planning ◆ design
David Higginson, Architect
127 East State Street
Redlands, California 92373
ph. (909) 793-3100 fax (909) 793-3140

CONSULTANT: REGISTERED PROFESSIONAL ENGINEER JAMES A. ELLER JR. MECHANICAL No. M 17575 Exp. 6-30-05 STATE OF CALIFORNIA

Arlanza Neighborhoods Initiative Project
Arlanza Youth & Family Resource Center
City of Riverside

SHEET TITLE: PLUMBING LEGEND, DETAILS & SCHEDULES

DRAWN BY: BT

CHECKED BY: JE

DATE: NOVEMBER 03

SHEET NO: P0.0

70421 / TS00-02

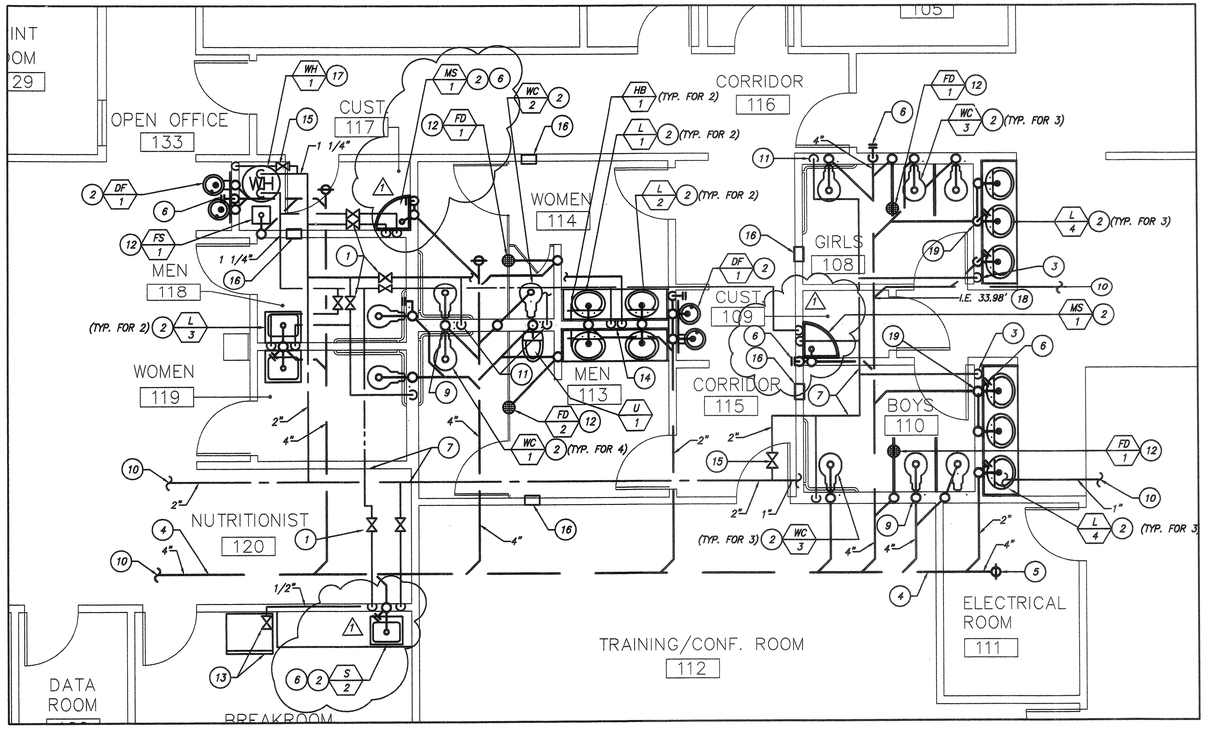

PARTIAL PLUMBING PLAN

1/4" = 1'-0" | 1

CONSTRUCTION NOTES:

1. TWO FULL LINE S.O.V.'S
2. SEE ISOMETRICS FOR WATER, W. & V. TO FIXTURES.
3. 3/4"CW. DN. TO FIXTURES.
4. PIPING BEL. SLAB OR GRADE.
5. F.C.O. (TYP.)
6. W.C.O (TYP.)
7. PIPING IN CEILING SPACE.
8. 1 1/2"CW. DN. TO FIXTURES.
9. 3" V.T.R.
10. FOR CONTINUATION SEE 2/P1.0
11. 1 1/2"CW. DN. TO FIXTURES.
12. SEE ISOMETRIC FOR W. & V.
13. ICE MACHINE N.I.P.C. PROVIDE CW TUBING MATCH INLET SIZE AND PROVIDE PET COCK.
14. 3/4"HW. & 3/4"CW. DN. TO FIXTURES.
15. FULL LINE SIZE S.O.V.
16. PROVIDE TRAP PRIMER, TUBING & ACCESS PANEL, +6" A.F.F.
17. WATER HEATER, SEE DETAIL 1/P0.0
18. AT STRUCTURAL BEAM BEL. FLR.
19. 2" W DN. PAST FOOTING

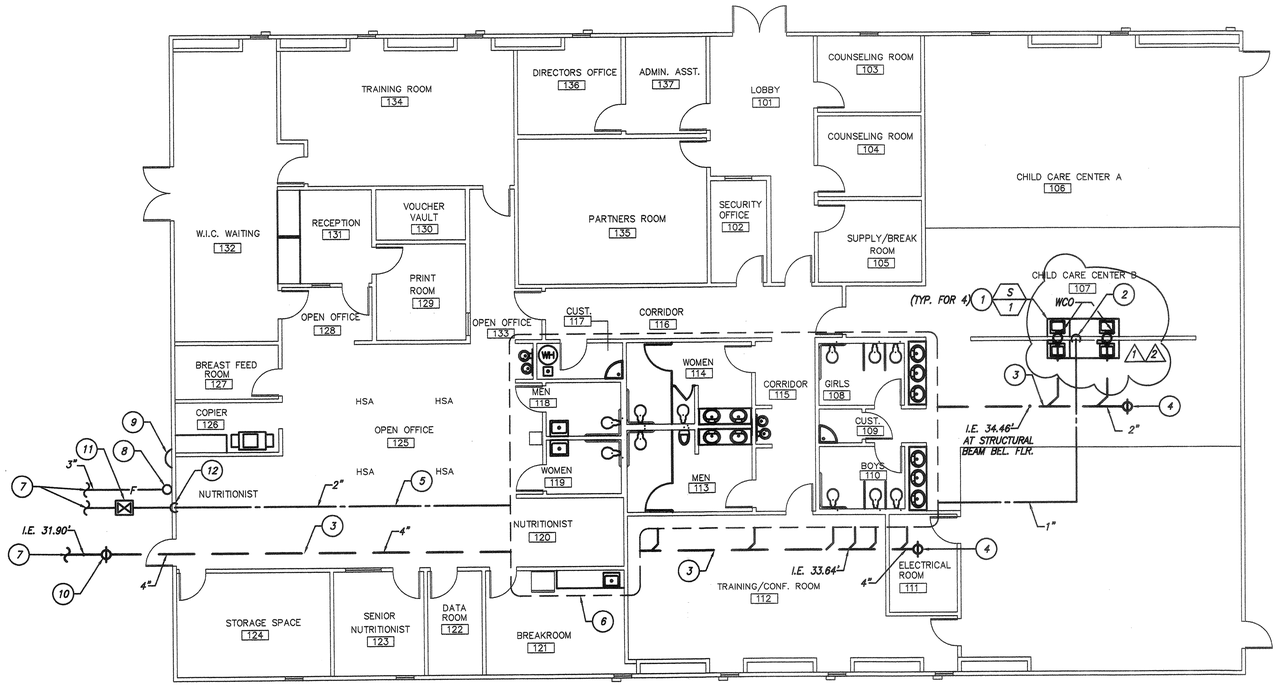

PLUMBING PLAN

1/8" = 1'-0" | 2

CONSTRUCTION NOTES:

1. SEE ISOMETRICS FOR WATER, W. & V. TO FIXTURES
2. 3/4"CW. DN. TO FIXTURES – PROVIDE W/2% SLOPE
3. PIPING BEL. SLAB OR GRADE.
4. F.C.O. (TYP.)
5. PIPING IN CEILING SPACE.
6. FOR PIPING IN THIS AREA SEE 1/P1.0
7. FOR CONTINUATION SEE CIVIL DWG'S.
8. FIRE SPRINKLER RISER, SEE DETAIL 2/P0.0
9. EXTERIOR ALARM ANCHORED TO WALL.
10. C.O.T.G. N.I.P.C., SEE CIVIL DWG'S.
11. 2"S.O.V. IN VALVE BOX, SEE DETAIL 3/P0.0
12. 2"CW. RISER IN WALL.

ELLER & ASSOCIATES
MECHANICAL CONSULTANTS
11680 DODD ST. YUCAIPA, CA. 92399
TEL. (909) 790-0140 FAX. (909) 790-0236

APPROVALS

ARCHITECT: LICENSED ARCHITECT DAVID HIGGINSON NO. C19168 REN. 10-31-04 STATE OF CALIFORNIA

3	REVISIONS
2	DATE: 12/07/03
1	DATE: 01/09/04

higginson + cartozian architects, inc.
architecture ◆ planning ◆ design
David Higginson, Architect
127 East State Street
Redlands, California 92373
ph. (909) 793-3100 fax (909) 793-3140

CONSULTANT: REGISTERED PROFESSIONAL ENGINEER JAMES A. ELLER M-21075 Exp. 6-30-05 MECHANICAL STATE OF CALIFORNIA

Arlanza Neighborhoods Initiative Project
Arlanza Youth & Family Resource Center
City of Riverside

SHEET TITLE: PLUMBING PLANS

DRAWN BY: BT
CHECKED BY: JE
DATE: NOVEMBER 03

SHEET NO: P1.0

70421/T500-02

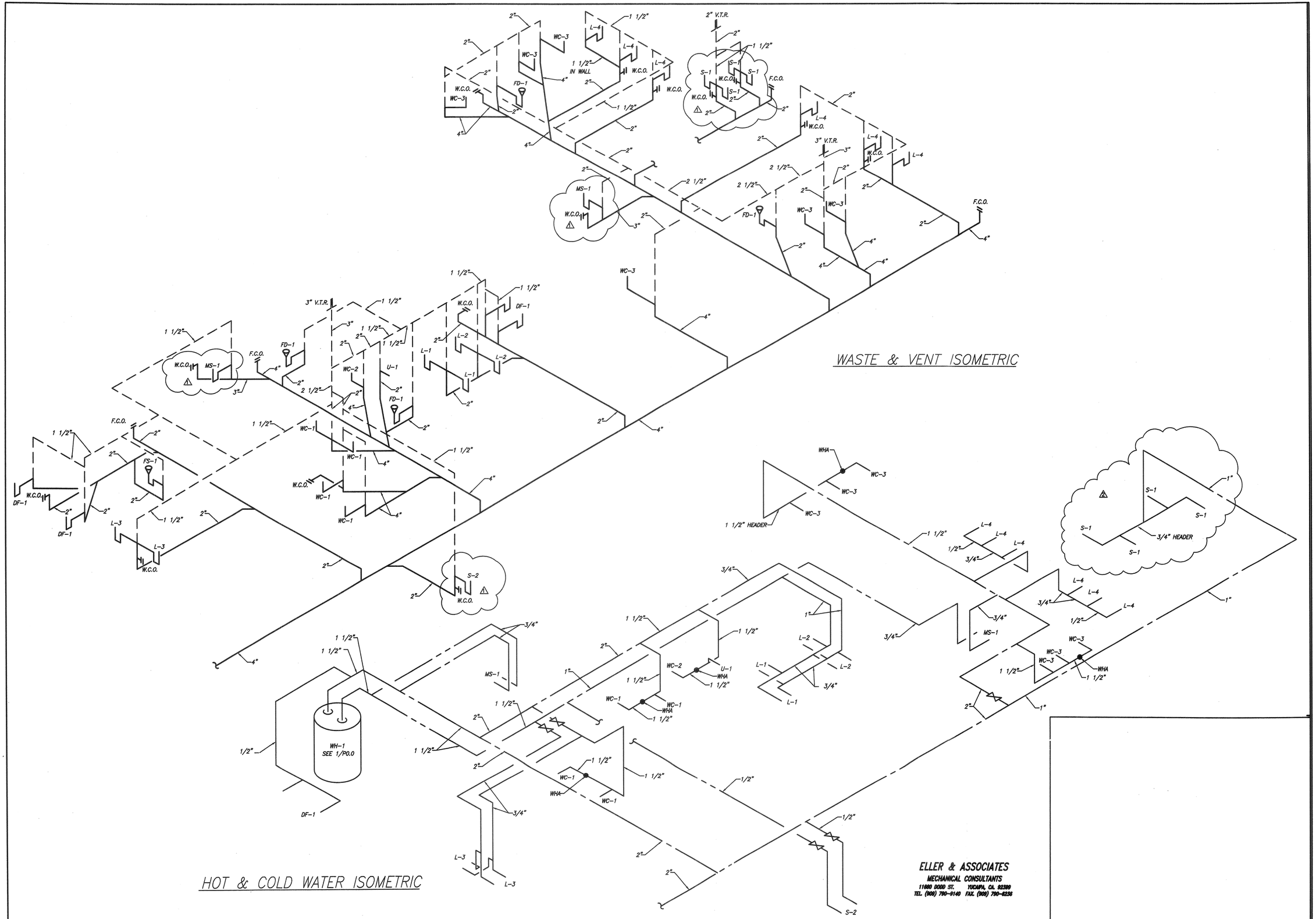

ELLER & ASSOCIATES
MECHANICAL CONSULTANTS
11680 DODD ST. YUCAIPA, CA. 92399
TEL. (909) 790-9140 FAX. (909) 790-9238

PLUMBING ISOMETRICS | N.T.S. | 1 APPROVALS

ARCHITECT:
DAVID HIGGINSON
LICENSED ARCHITECT
NO. C10168
REN. 10-31-05
STATE OF CALIFORNIA

1	REVISIONS
1	DATE: 12/8/03
2	DATE: 01/09/04

higginson + cartozian architects, inc.
architecture ◆ planning ◆ design
David Higginson, Architect
127 East State Street
Redlands, California 92373
ph. (909) 793-3100 fax (909) 793-3140

CONSULTANT:
ROBERT A. ELLER
PROFESSIONAL ENGINEER
MECHANICAL
No. M-21075
Exp. 6-30-05
STATE OF CALIFORNIA

Arlanza Neighborhoods Initiative Project
Arlanza Youth & Family Resource Center
City of Riverside

SHEET TITLE:
PLUMBING ISOMETRICS

DRAWN BY: BT
CHECKED BY: JE
DATE: NOVEMBER 03

SHEET NO:
P2.0

10313/SP00-01

PLUMBING SPECIFICATIONS

1. ORDINANCES AND REGULATIONS:

   A. ALL WORK AND MATERIALS SHALL BE IN FULL ACCORDANCE WITH THE LATEST RULES AND REGULATIONS OF THE 1998 UNIFORM PLUMBING CODE AND ALL APPLICABLE STATE, COUNTY OR LOCEL LAWS OR REGULATIONS. NOTHING WITHIN THE PLUMBING PLANS OR SPECIFICATIONS IS TO BE CONSTRUED TO PERMIT WORK NOT CONFORMING TO THESE CODES

2. EXAMINATION OF PREMISES:

   A. BEFORE BIDDING ON THIS WORK CONTRACTORS SHALL MAKE A CAREFUL EXAMINATION OF THE PREMISES AND SHALL THOROUGHLY FAMILIARIZE THEMSELVES WITH THE REQUIREMENTS OF THE CONTRACT. BY THE ACT OF SUBMITTING A PROPOSAL FOR THE WORK INCLUDED IN THIS CONTRACT, THE CONTRACTOR SHALL BE DEEMED TO HAVE MADE SUCH STUDY AND EXAMINATION AND THAT HE IS FAMILIAR WITH AND ACCEPTS ALL CONDITIONS OF THE SITE.

3. MATERIALS:

   A. USE ONLY NEW MATERIALS, AND UNLESS PREFABRICATED, DELIVER TO THE SITE IN STANDARD SIZES. USE THE STANDARD PRODUCT OF ONE MANUFACTURER FOR EACH ARTICLE OF ITS TYPE. COMPLY WITH THE MINIMUM STANDARDS FOR PLUMBING MATERIALS AS OUTLINED IN TABLE A, CHAPTER 2 OF THE UNIFORM PLUMBING CODE, EXCEPT AS HEREIN SPECIFIED TO BE ABOVE THESE STANDARDS. MATERIALS AND WORKMANSHIP NOT OTHERWISE SPECIFIED ARE TO CONFORM TO THE LATEST APPLICABLE FEDERAL, NFPA, ASME, ASTM, NEMA, OR AGA SPECIFICATIONS.

   B. PIPE AND FITTINGS:

      1) HOT AND COLD WATER PIPING: ABOVE SLAB SHALL BE TYPE "L" AND UNDERGROUND SHALL BE TYPE "K" COPPER EXTRUDED TUBING HARD TEMPER, IN ACCORDANCE WITH A.S.T.M. SPECIFICATION B88-62, WITH SOLDER JOINT FITTINGS MADE UP WITH "BRIDGIT" STAY-SAFE SOLDER OR 95-5 TIN-ANTIMONY SOLDER AS RECOMMENDED BY MANUFACTURER. MUELLER, NIBCO, ANACONDA OR CHASE.

      2) WASTE AND SEWER PIPING: PIPING ABOVE & BELOW FLOOR / GRADE, SHALL BE SERVICE WEIGHT CAST IRON NO-HUB WITH STAINLESS STEEL COUPLINGS AND NEOPRENE GASKETS.

      3) VENT PIPING: 1-1/2" AND UNDER SHALL BE SCHEDULE 40 GALVANIZED STEEL PIPE A.S.T.M. A-120-62 WITH MALLEABLE GRABLER, GRINNELL, STOCKHAM, OR WALWORTH IRON FITTINGS.

      VENT PIPING 2" AND OVER AND ALL VENT PIPING BELOW SLAB SHALL BE SERVICE WEIGHT CAST IRON NO-HUB WITH STAINLESS STEEL COUPLINGS.

4. TESTING:

   A. ALL PIPING SYSTEMS SHALL BE TESTED FOR THE FOLLOWING MINIMUM PRESSURE:

SYSTEM TESTED	GAUGE PRESSURE AT START OF TEST	GAUGE PRESSURE AFTER 4 HOURS OF TEST NOT LESS THAN	TEST WITH
DOMESTIC WATER	150 PSI	145 PSI WITH NO LEAKAGE	WATER
SANITARY SEWER	FILL TO 4" FROM TOP OF HIGHEST VENT OR 10' ABOVE FLOOR	SHALL NOT DROP OVER 4", WITH NO LEAKAGE	WATER

   B. PROPERLY TEST, ADJUST AND PLACE IN PERFECT OPERATING CONDITION PRIOR TO ACCEPTANCE BY ARCHITECT.

5. CERTIFICATION:

   A. PROVIDE ARCHITECT WITH WRITTEN CERTIFICATION THAT ALL PARTS HAVE BEEN PROPERLY TESTED AND ARE IN GOOD OPERATING CONDITION UPON COMPLETION OF WORK.

6. STERILIZATION OF WATER PIPING:

   A. THE WATER SUPPLY AND DISTRIBUTION SYSTEM SHALL BE STERILIZED BY CHLORINE IN SOLUTION IN ACCORDANCE WITH THE APPLICABLE AMERICAN WATER WORKS ASSOCIATION AWWA C651-92 STANDARD AND LOCAL HEALTH DEPARTMENT ORDINANCES.

   B. ALL WORK AND CERTIFICATION OF PERFORMANCE SHALL BE DONE BY APPROVED APPLICATORS OR QUALIFIED PERSONNEL WITH CHEMICAL AND LABORATORY EXPERIENCE. SUBMIT A CERTIFICATE OF STERILIZATION.

7. FIXTURES:

   A. WATER CLOSET (WC-1): AMERICAN STANDARD 3043.102 CADET FLOOR MOUNTED FLUSH VALVE, SIPHON JET TOILET, VITREOUS CHINA, ELONGATED BOWL, 1-1/2" TOP SPUD, WITH SLOAN 111 FLUSH VALVE AND OLSONITE NO. 95 OPEN FRONT WHITE SEAT WITH STAINLESS STEEL HINGE AND CHECK.

   B. WATER CLOSET (WC-2): AMERICAN STANDARD 2234.015 MADERA FLOOR MOUNTED FLUSH VALVE, SIPHON JET TOILET, VITREOUS CHINA, ELONGATED BOWL, 1-1/2" TOP SPUD, WITH SLOAN 111 FLUSH VALVE AND OLSONITE NO. 95 OPEN FRONT WHITE SEAT WITH STAINLESS STEEL HINGE AND CHECK.

   C. WATER CLOSET (WC-3): AMERICAN STANDARD 2282.010 BABY DEVORO FLOOR MOUNTED FLUSH VALVE, SIPHON JET TOILET, VITREOUS CHINA, ELONGATED BOWL, 1-1/2" TOP SPUD, WITH SLOAN 111 FLUSH VALVE AND OLSONITE NO. 126-CC OPEN FRONT WHITE SEAT WITH STAINLESS STEEL HINGE AND CHECK.

   D. LAVATORY (L-1): AMERICAN STANDARD 0476.028 AQUALYN, VITREOUS CHINA FITTED WITH RELIANT 2385.130 ADA FAUCET AND GRID DRAIN, 2.2 GPM FLOW DEVICE, L.A. PATTERN CHROME PLATED, CAST BRASS "P" TRAP, T & S ANGLE VALVES, WALL FLANGES, 3/8" SUPPLIES, ALL EXPOSED DRAIN PIPING, HOT WATER STOP & SUPPLY SHALL BE INSULATED WITH "TRUEBRO" GUARD COVERS.

   E. LAVATORY (L-2): AMERICAN STANDARD 0476.028 AQUALYN, VITREOUS CHINA FITTED WITH RELIANT 2385.130 ADA FAUCET AND GRID DRAIN, 2.2 GPM FLOW DEVICE, L.A. PATTERN CHROME PLATED, CAST BRASS "P" TRAP, T & S ANGLE VALVES, WALL FLANGES, 3/8" SUPPLIES.

   F. LAVATORY (L-4): AMERICAN STANDARD 0476.028 AQUALYN, VITREOUS CHINA FITTED WITH RELIANT 2385.130 ADA FAUCET AND GRID DRAIN, 2.2 GPM FLOW DEVICE, L.A. PATTERN CHROME PLATED, CAST BRASS "P" TRAP, T & S ANGLE VALVE, WALL FLANGE, 3/8" SUPPLY.

   G. LAVATORY (L-3): AMERICAN STANDARD 0356.421 LUCERN WALL HUNG, VITREOUS CHINA WITH 4" HIGH BACK FITTED WITH RELIANT 2385.130 FAUCET WITH GRID DRAIN, 2.2 GPM FLOW DEVICE, SMITH 700 SUPPORT, L.A. PATTERN CHROME PLATED-CAST BRASS "P" TRAP, CHICAGO 1013 ANGLE STOPS WALL FLANGES AND 3/8" SUPPLIES. ALL EXPOSED DRAIN PIPING, HOT WATER STOPS & SUPPLY SHALL BE INSULATED WITH "TRUEBRO" LAV GUARD COVERS.

   H. FLOOR DRAIN (FD-1): J.R. SMITH 2005Y-A CAST IRON WITH 5" STRAINER AND P-TRAP WITH TRAP PRIMER

   I. SINK (SK-1): ELKAY LR-1922 18 GAGE, TYPE 302 (18-8) NICKEL BEARING STAINLESS STEEL SELF RIMMING SINK, THREE HOLE PUNCHING WITH LK-4100 LK-4100 FAUCET, ANGLE STOPS, 3/8" SUPPLIES, OMNI 1 GPM LAMINAR FLOW OUTLET AND ADAPTOR, GRID DRAIN AND 1-1/2" L.A. PATTERN CHROME PLATED-CAST BRASS "P" TRAP.

   J. SINK (SK-2): ELKAY LR-1922 18 GAGE, TYPE 302 (18-8) NICKEL BEARING STAINLESS STEEL SELF RIMMING SINK, THREE HOLE PUNCHING WITH LK-4100 LK-4100 FAUCET, ANGLE STOPS, 3/8" SUPPLIES, OMNI 2.2 GPM LAMINAR FLOW OUTLET AND ADAPTOR, BASKET STRAINER AND 1-1/2" L.A. PATTERN CHROME PLATED-CAST BRASS "P" TRAP.

   K. FLOOR SINK (FS-1): J.R. SMITH 3100-Y ACID RESISTANT COATED INTERIOR, DOME BOTTOM STRAINER AND P-TRAP WITH TRAP PRIMER

   L. URINAL (U-1): AMERICAN STANDARD 6541-132 ALLBROOK SIPHON JET URINAL WITH FLUSHING RIM, VITREOUS CHINA, 1-1/4" TOP INLET SPUD WITH SLOAN 111 FLUCH VALVE, SMITH 644 SUPPORT AND OLSONITE NO. 95 OPEN FRONT WHITE SEAT WITH STAINLESS STEEL HINGE AND CHECK. FIXTURE SHALL BE ACCESSIBLE MOUNTED

   M. URINAL (U-2): AMERICAN STANDARD 6541-132 ALLBROOK SIPHON JET URINAL WITH FLUSHING RIM, VITREOUS CHINA, 1-1/4" TOP INLET SPUD WITH SLOAN 111 FLUSH VALVE, SMITH 644 SUPPORT AND OLSONITE NO. 95 OPEN FRONT WHITE SEAT WITH STAINLESS STEEL HINGE AND CHECK.

   N. DRINKING FOUNTAIN (DF-1): HAWS MODEL 1108 TWO-LEVEL ACCESS COMPLIANT DRINKING FOUNTAIN, STAINLESS STEEL BASIN, CHROME PLATED VANDAL-RESISTANT BUBBLERS, PUSH BUTTONS, STOP VALVES AND TWO "P" TRAPS. PROVIDE MOUNTING PLATE ANCHORED TO WALL.

8. SUBMITTALS:

   A. FIVE BOUND SETS OF CATALOG DATA SHALL BE SUBMITTED FOR ALL PLUMBING FIXTURES SHOWN OR LISTED ON DRAWINGS (INCLUDING ALL ASSOCIATED TRIM) AND PIPE, VALVES AND FITTINGS FOR ALL PLUMBING SYSTEMS.

9. VALVES:

   A. GENERAL: VALVES, EXCEPT AS OTHERWISE SPECIFIED, SHALL BE AS MANUFACTURED BY CRANE, KENNEDY, STOCKHAM, OR WALWORTH. MANUFACTURER'S FIGURE NUMBERS SPECIFIED ARE FOR TYPE AND CONSTRUCTION. VALVES FOR SIMILAR SERVICE SHALL BE LINE SIZE UNLESS OTHERWISE NOTED ON THE DRAWINGS. VALVES FOR SIMILAR SERVICE SHALL BE OF ONE MANUFACTURER. INSTALLATION OF VALVES SHALL CONFORM TO THE FOLLOWING:

   B. GATE VALVES: 3" AND SMALLER: COPPER PIPE, "NIBCO" T-113 CLASS 125 BRONZE SOLDERED THREADED CONNECTIONS.

   C. CHECK VALVE: 2" AND SMALLER: "NIBCO" OR "WATTS" CLASS 125 SWING CHECK, WITH BRONZE DISC AND SCREWED CONNECTIONS

   D. BALL VALVES: 1/2" TO 3": "NIBCO" T-FP-600 BRONZE WITH THREADED CONNECTIONS CAST BRONZE.

10. PIPE HANGERS AND SUPPORTS:

   A. HANGERS SUPPORTING STEEL AND CAST IRON PIPING SHALL BE KIN-LINE FIGURE 450 FEE AND MASON, ELCEN, B-LINE, AND UNISTRUT, SUPERIOR OR FOR SIZES 4" AND SMALLER. HANGERS FOR STEEL AND CAST IRON PIPING 5" AND LARGER SHALL BE FEE AND MASON FIGURE 239, B-LINE, GRINNELL AND UNISTRUT.

   FEE AND MASON NO. 214 OR KIN-LINE, B-LINE, GRINNELL AND UNISTRUT, HANGER ROD SIZES SHALL BE AS FOLLOWS:

PIPE SIZE	MAX. HANGER SPACING	ROD SIZE
1/2" TO 1 1/4"	7 FT.	3/8"
1-1/2" TO 2"	9 FT.	1/2"
2 1/2" TO 3 1/2"	10 FT.	5/8"
6" AND LARGER	10 FT.	3/4"

   B. WATER PIPING: HANGERS FOR WATER PIPING SHALL BE KIN-LINE FIGURE 450, FEE-MASON, B-LINE, GRINNELL AND UNISTRUT.

   HANGER SPACING & ROD SIZES SHALL BE AS FOLLOWS FOR COPPER TUBING:

PIPE SIZE	MAX. HANGER SPACING	ROD SIZE
1/2" TO 3/4"	5 FT.	3/8"
1"	6 FT.	3/8"
1-1/4"	7 FT.	3/8"
1-1/2"	8 FT.	3/8"
2"	8 FT.	3/8"
2-1/2"	9 FT.	1/2"
3" TO 5"	10 FT.	3/4"

   HANGERS SHALL BE SIZED FOR USE OVER STONEMAN TRISOLATOR, OR EQUAL BY POTTER-ROEMER AND FEE & MASON.

11. CLEANOUTS AND PLATES:
    PROVIDE J.R. SMITH WALL OR END OF LINE CLEANOUTS AS INDICATED ON DRAWINGS.
    PROVIDE J.R. SMITH 4021S-Y END OF LINE CLEANOUTS FOR CARPETED AREAS.

12. PIPING SHALL BE CONCEALED IN FINISHED PORTIONS OF BUILDING EXCEPT AS OTHERWISE NOTED, OR UNLESS OTHERWISE DIRECTED.

13. CONTRACTOR SHALL CONSISTENTLY CHECK WORK OF OTHER TRADES SO AS TO PREVENT ANY INTERFERENCE WITH PIPING INSTALLATION.

14. PROVIDE PRECISION PLUMBING PRODUCTS, INC., TRAP PRIMER VALVES IN ACCESS PANEL WITH ASSOCIATED TUBING AS CALLED FOR ON THE DRAWINGS.

15. BURRED ENDS DUE TO CUTTING PIPE SHALL BE REAMED TO FULL BORE OF PIPE. THIS APPLIES TO ALL PIPE MATERIALS.

16. PLUMBING TAPE, WIRE, ROPE, WOOD OR OTHER MAKESHIFT DEVICES WILL NOT BE ACCEPTABLE.

17. METAL ACCESS PANELS OF SUITABLE SIZE AND OF TYPE SPECIFIED SHALL BE PROVIDED FOR ALL VALVES, AIR GAP FITTINGS, CONTROLS, TRAP PRIMERS AND CLEAN-OUTS LOCATED IN CONCEALED CHASES IN OR BEHIND WALLS OR ABOVE NON-ACCESSIBLE CEILINGS.

18. ACCESS BOXES AND PANELS SHALL BE SET FLUSH WITH FINISHED WALL, FLOOR, CEILING OR GRADE. THOSE IN FINISHED WALL SHALL HAVE DOOR OR PLATE REMOVED DURING CONSTRUCTION OR SHALL BE OTHERWISE PROTECTED.

19. FIXTURES AT JUNCTION WITH FLOOR AND WALLS SHALL HAVE JOINT GROUTED WITH RESILIENT NON-HARDENING PLASTIC CAULKING COMPOUND, IN COLOR TO MATCH SURROUNDING MATERIAL AND FINISHED SMOOTHLY AND EVENLY. "PECORA," DAP.

20. EXCAVATION AND BACKFILL:

    A. EXCAVATION FOR PIPES SHALL BE CUT A MINIMUM OF 6" BELOW REQUIRED TRENCH GRADE. A 6" BED OF SAND OR OTHER APPROVED MATERIAL SHALL THEN BE PLACED AND COMPACTED TO PROVIDE AN ACCURATE GRADE AND UNIFORM BEARING THROUGHOUT THE LENGTH OF PIPE. BACKFILLING SHALL BE COMPACTED TO 90% AFTER INSPECTION.

21. GUARANTEE:

    A. GUARANTEE IN WRITING THAT ALL MATERIALS ARE NEW AND FREE FROM ALL DEFECTS AND GUARANTEED FOR A PERIOD OF ONE (1) YEAR FROM DATE OF THE RECORDING OF THE NOTICE OF COMPLETION. SHOULD ANY TROUBLE DEVELOP DURING THIS PERIOD DUE TO DEFECTIVE MATERIAL OR FAULTY WORKMANSHIP, THIS CONTRACTOR SHALL FURNISH ALL NECESSARY LABOR AND MATERIALS TO CORRECT THE TROUBLE WITHOUT ANY COST TO THE OWNER.

ELLER & ASSOCIATES
MECHANICAL CONSULTANTS
11680 DODD ST. YUCAIPA, CA. 92399
TEL. (909) 790-8140 FAX. (909) 790-6236

APPROVALS

ARCHITECT: LICENSED ARCHITECT DAVID HIGGINSON NO. C19168 REN. 10-31-03 STATE OF CALIFORNIA

REVISIONS
DATE:
DATE:

higginson + cartozian architects, inc.
architecture ◆ planning ◆ design
David Higginson, Architect
127 East State Street
Redlands, California 92373
ph. (909) 793-3100 fax (909) 793-3140

CONSULTANT: REGISTERED PROFESSIONAL ENGINEER JAMES A. ELLER No. M-21075 Exp. 6-30-05 MECHANICAL STATE OF CALIFORNIA

Arlanza Neighborhoods Initiative Project
Arlanza Youth & Family Resource Center
City of Riverside

SHEET TITLE: PLUMBING SPECIFICATIONS

DRAWN BY: BT

CHECKED BY: JE

DATE: NOVEMBER 03

SHEET NO: P3.0

70421/TS00-02

FIRE PROTECTION SPECIFICATIONS:

FIRE SPRINKLER SYSTEM

PART I – GENERAL

The general conditions of the contract, including the supplementary conditions and sections in Division 1 apply to work specified in this section. Specifications notes as listed on plans shall be made a part of this Contract.

1.01 SCOPE OF WORK:

A. This contract covers the complete installation of all fire sprinkler work, including the furnishing of all labor, materials, fixtures and equipment with connections thereto, and tools, complete as indicated herein, including, but not limited to, the following:

1. Examine all other sections for work related to and required to be included as work under this section.

2. Design and construct a wet automatic fire protection sprinkler system including valves, interior piping and heads to cover occupied and unoccupied spaces in the included areas. Comply with all agencies listed in the design criteria.

1.02 QUALITY ASSURANCE:

A. All work and materials shall conform to the latest codes having jurisdiction; recommendations and requirements of the local fire department or fire marshall; recommendations and requirements of the Owner's insurance company, and the Fire Rating Bureau; the OSHA and any local or state ordinances and regulations pertaining to adequate protection and/or guarding of any moving or otherwise hazardous locations.

B. Submit to the Architect signed certificates from the suppliers of materials and manufactured items to conform to the standards set forth in this section.

C. Heads shall be symmetrically located and coordinated with architectural plans.

1.03 DRAWINGS:

A. Prepare and submit to the Architect a reflected ceiling plan showing the proposed fire sprinkler heads in relation to the ceiling tile pattern, light fixtures and duct openings. Approval of these drawings shall be a prerequisite for the preparation of further shop drawings. See Fire Protection Note on drawings for further requirements.

1.04 SUBMITTALS:

A. Submittals shall be bound in booklet form with a complete index, including the manufacturers' names, cut of equipment, performance data, catalog numbers and trade names as required to properly identify the materials and equipment to be furnished under these specifications. Six (6) sets of submittals shall be supplied to the Architect and be approved prior to the ordering of any equipment.

B. Submit six 6) sets of approved working drawings of the fire sprinkler system. The approval of the Fire Department and the Owner's insurance brokers must be on each set.

1.05 DESIGN CRITERIA:

A. General:

1. The contractor shall prepare shop drawings showing the entire installation of the fire sprinkler system. He shall refer to all contract documents and familiarize himself with all aspects of construction which affect his work. The system shall be a hydraulically designed system or pipe schedule system per NFPA 13. The contractor shall provide all necessary calculations to show that the design is in compliance with NFPA 13.

B. The complete sprinkler system, including workmanship, materials and installation, shall be in compliance with the requirements of the State Fire Marshall, National Fire Protection Association, current edition, Pamphlet No. 13, local authorities, the Owner's fire insurance company, and these specifications; the most stringent requirements of any one of them shall apply.

C. When these specifications call for or describe materials, workmanship or construction of a better quality, higher standard or larger sizes than that required by the above-mentioned rules and regulations, the provisions of these specifications shall take precedence over said rules and regulations. The Contractor shall furnish, without extra charge, any additional material or labor, or both, when required for compliance with referenced rules and regulations whether or not mentioned in these specifications.

PART 2 – MATERIALS

2.01 GENERAL:

A. All material shall be as listed and as approved by the UL's list of inspected firm protection equipment and materials or approved by any acceptable, appropriate, nationally recognized testing laboratory for use in sprinkler system and shall be latest design of the manufacturer.

2.02 SPRINKLER HEADS:

A. Sprinkler heads shall be UL approved for use intended; manufactured by Star Sprinkler Corperation or equal. All piping for recessed type heads shall be concealed.

B. Upright and pendent heads, Liquidator LD-2, shall be installed in all areas without suspended ceilings, janitor rooms and in ceiling spaces. Heads shall be rough brass finish.

C. Recessed heads, Nova Starmist LD-2 pendent, with white on white ceiling plate, shall be installed in all areas with suspended ceilings.

D. Sprinkler heads and piping shall be coordinated with ceiling pattern to miss ducts, grilles, diffusers, lights and piping, and to match the ceiling pattern.

E. Extra Heads: Provide extra heads, six (6) each type, enclosed in a labeled sprinkler cabinet, and one head wrench for each type. Cabinet shall be mounted where directed by the Architect.

2.03 PIPING:

A. Sprinkler Piping Above Grade: Schedule 40, black steel or light wall listed in NFPA Pamphlet No. 13 and approved by UL and FM.

B. Drain Piping: Schedule 40, galvanized steel.

2.04 FITTINGS:

A. Sprinkler Piping Above Ground Fittings: Cast iron, standard weight or Victaulic couplings and fittings, UL approved.

B. Drain Piping Fittings: Cast iron, drainage pattern, standard weight, screwed.

2.05 VALVES:

A. All valves shall be Underwriters' approved.

B. Screwed O.S. & Y: 175 pound, bronze body, bronze trim, cast iron handwheel, bolted gland.

C. Flanged O.S. & Y: 175 pound, iron body, Crane or Nibco for the purpose intended.

PART 3 – EXECUTION

3.01 TAGS:

A. Provide brass tags, about 2" in diameter. Stamp with designating numbers, secure with 12 gauge copper wire to spindle all of the valves.

3.02 INSTALLATION:

A. Shall be in accordance with the State Fire Marshall requirements and NFPA Pamphlets No. 13.

B. Supports, Hangers, Bracing, Inserts: Support sprinkler pipin from building structure by means of hangers, bracing, inserts and other supports as per requirement of NFPA Pamphlet No. 13.

3.03 PIPING INSTALLATION:

A. The location and elevation of all piping, valves, etc., shall be coordinated with all other trades, structural conditions, ceiling heights and building construction prior to fabrication or installation. Piping shall be installed as high as possible; or as indicated on the drawings shall be maintained. If coordination cannot be achieved or requirements not met, a clarification from Architect shall be requested prior to fabrication or installation.

B. Pipe and Fitting: Construct pipe lines of full-length sections of pipe specified. Short sections allowed only when run requires less than one full-length of pipe.

1. Install pipe runs and connections to insure unrestricted flow, and allow for drainage of system;

2. Conceal piping in finished portions of building except where otherwise noted, or otherwise directed by the Architect;

3. Piping shall clear structural members and obstructions. Constantly check the work of the trades to prevent interference.

C. Pipe Sleeves: Provide 20 gauge steel pipe sleeves for concrete walls and floor of sufficient size to permit the pipes to pass through, and in no case having an inside diameter less than 1" larger than outside diameter of passing pipe. Cut sleeve ends flush with both surfaces, galvanized steel telescoping type sleeves as manufactured by "Adjust-to-Crete" or "Paramount Mfg. Co." may be used.

D. Flush system in accordance with recommendation of the Board of Fire Underwriters recommendations and the NFPA.

E. Screw joints shall be made up with pipe paste applied to male threads only. Ream pipe as necessary to make bore at end of pipe same diameter as within the pipe.

F. Victaulic joints installed as manufacturer's recommendations.

G. All provisions of the execution section of the "plumbing" section shall apply except as modified by this section.

3.04 DRAIN CONNECTIONS:

A. As required by code shall extend and discharge to a location approved by the local authorities and the Architect.

3.05 TESTING:

A. Test system in accordance with requirements of NFPA and Owner's insurance broker.

B. Upon completion of the system, the Contractor shall subject same to a hydrostatic pressure of 200 psi, for a two-hour continuous period. Any defects due to materials and workmanship occurring during this test shall be witnessed by the Owner.

C. The Insurance Service Office and Owner shall be allowed to conduct such tests as they choose. Any cost in connection with these tests shall be paid for by the Contractor.

3.06 CLOSE-OUT:

A. Upon completion of work in this section, the Contractor shall remove all equipment, excess material and waste products from the site.

ELLER & ASSOCIATES
MECHANICAL CONSULTANTS
11680 DODD ST. YUCAIPA, CA. 92399
TEL. (909) 790-9140 FAX. (909) 790-6238

APPROVALS

ARCHITECT:
LICENSED ARCHITECT DAVID HIGGINSON NO.C19168 REN. 10-31-05 STATE OF CALIFORNIA

higginson + cartozian architects, inc.
architecture ◆ planning ◆ design
David Higginson, Architect
127 East State Street
Redlands, California 92373
ph. (909) 793-3100 fax (909) 793-3140

CONSULTANT:
REGISTERED PROFESSIONAL ENGINEER JAMES A. ELLER MECHANICAL STATE OF CALIFORNIA Exp. 6-30-05

3	REVISIONS
2	DATE:
1	DATE:

Arlanza Neighborhoods Initiative Project
Arlanza Youth & Family Resource Center
City of Riverside

SHEET TITLE: FIRE PROTECTION SPECIFICATIONS

DRAWN BY: BT

CHECKED BY: JE

DATE: NOVEMBER 03

SHEET NO: P4.0

70421/TS00-02

ENERGY FORMS

CERTIFICATE OF COMPLIANCE (Part 1 of 2) MECH-1

PROJECT NAME	ARLANZA YOUTH & FAMILY RESOURCE CENTER	DATE	11/11/03
PROJECT ADDRESS	RIVERSIDE, CA.		
PRINCIPAL DESIGNER-MECHANICAL	JAMES A. ELLER	TELEPHONE	(909) 790-9140
DOCUMENTATION AUTHOR	DANIEL C. NEVILLS	TELEPHONE	(909) 593-7744

Building Permit #

Checked by/Date Enforcement Agency Use

GENERAL INFORMATION

DATE OF PLANS	BUILDING CONDITIONED FLOOR AREA	8500 SQ. FT.	
BUILDING TYPE	☒ NONRESIDENTIAL	☐ HIGH RISE RESIDENTIAL	☐ HOTEL/MOTEL GUEST ROOM
PHASE OF CONSTRUCTION	☐ NEW CONSTRUCTION	☐ ADDITION	☒ ALTERATION ☐ UNCONDITIONED (file affidavit)
METHOD OF MECHANICAL COMPLIANCE	☒ PRESCRIPTIVE	☐ PERFORMANCE	
PROOF OF ENVELOPE COMPLIANCE	☐ PREVIOUS ENVELOPE PERMIT	☐ ENVELOPE COMPLIANCE ATTACHED	

STATEMENT OF COMPLIANCE

This Certificate of Compliance lists the building features and performance specifications need to comply with Title 24, Parts 1 and 6 of the California Code of Regulations. This certificate applies only to building mechanical requirements.

The documentation preparer hereby certifies that the documentation is accurate and complete.

DOCUMENTATION AUTHOR	SIGNATURE	DATE
DANIEL C. NEVILLS		11/11/03

The Principal Mechanical Designer hereby certifies that the proposed building design represented in this set of construction documents is consistent with the other compliance forms and worksheets, with the specifications, and with any other calculations submitted with this permit application. The proposed building has been designed to meet the mechanical requirements contained in the applicable parts of sections 110 through 115, 120 through 124, 140 through 142, 144 and 145.

Please check one:

☐ I hereby affirm that I am eligible under the provisions of Division 3 of the Business and Professions Code to sign this document as the person responsible for its preparation; and that I am licensed in the State of California as a civil engineer or mechanical engineer, or I am a licensed architect.

☐ I affirm that I am eligible under the exemption to Division 3 of the Business and Professions Code by section 5537.2 or 6737.3 to sign this document as the person responsible for its preparation; and that I am a licensed contractor performing this work.

☐ I affirm that I am eligible under the exemption to Division 3 of the Business and Professions Code to sign this document because it pertains to a structure or type of work described pursuant to Business and Professions Code Sections 5537, 5538 and 6737.1.

(These sections of the Business and Professions Code are printed in full in the Nonresidential Manual.)

PRINCIPAL MECHANICAL DESIGNER-NAME	SIGNATURE	DATE	LIC #
JAMES A. ELLER		11/11/03	M-21075

MECHANICAL MANDATORY MEASURES M1

Indicate location on plans of Note Block for Mandatory Measures

INSTRUCTIONS TO APPLICANT

For Detailed instructions on the use of this and all Energy Efficiency Standards compliance forms, please refer to the Nonresidential Manual published by the California Energy Commission.

MECH-1: Required on plans for all submittals. Part 2 may be incorporated in schedules on plans.
MECH-2: Required for all submittals, but may be incorporated in schedules on plans.
MECH-3: Required for all submittals unless required ventilation rates and airflows are shown on plans, see 4.3.4.
MECH-4: Required for all perscriptive submittals.
MECH-5: Optional. Performance use only for mechanical distribution summary.

Nonresidential Compliance Forms January 2001

CERTIFICATE OF COMPLIANCE (Part 2 of 2) MECH-1

PROJECT NAME DATE

SYSTEM FEATURES

SYSTEM NAME	MECHANICAL SYSTEMS: EXISTING HEAT PUMPS (AL)				NOTE TO FIELD Bldg. Dept. Use
TIME CONTROL	S				
SETBACK CONTROL	B				
ISOLATION ZONES	O				
HEAT PUMP THERMOSTAT?	Y				
ELECTRIC HEAT?	Y				
FAN CONTROL	C				
VAV MINIMUM POSITION CONTROL?	N				
SIMULTANEOUS HEAT/COOL?	N				
HEAT AND COOL SUPPLY RESET?	N				
HEAT REJECTION CONTROL	N				
VENTILATION	B				
OUTDOOR DAMPER CONTROL?	G				
ECONOMIZER TYPE	N				
DESIGN O.A. CFM (ME.H-3, COLUMN H)	300				
HEATING EQUIPMENT TYPE	HEAT PUMP				
HIGH EFFICIENCY? IF YES ENTER EFF. #	N				
MAKE AND MODEL NUMBER "BARD"	WH481-A10XX4				
COOLING EQUIPMENT TYPE	HEAT PUMP				
HIGH EFFICIENCY? IF YES ENTER EFF. #	N				
MAKE AND MODEL NUMBER "BARD"	WH481-A10XX4				
PIPE INSULATION REQUIRED?	Y				
PIPE INSULATION PROTECTED?	Y				
HEATING DUCT LOCATION R-VALUE	PLENUM 4.1				
COOLING DUCT LOCATION R-VALUE	PLENUM 4.1				
VERIFIED SEALED DUCTS IN CEILING/ROOF SPACE ≤ FAN FLOW	Y 1				

COMPLIANCE: Enter code from tables below into columns above.

	Y: Yes	N: No
HEAT PUMP THERMOSTAT?		
ELECTRIC HEAT?		
VAV MINIMUM POSITION CONTROL?		
SIMULTANEOUS HEAT/COOL?		
HEAT AND COOL SUPPLY RESET?		
HIGH EFFICIENCY?		
PIPE INSULATION REQUIRED?		
PIPE/DUCT INSULATION PROTECTED?		
SEALED DUCT IN CEILING/ROOF SPACE?		

TIME CONTROL	SETBACK CTRL.	ISOLATION ZONES	FAN CONTROL
S: Prog. Switch O: Occupancy Sensor M: Manual Timer	N: Heating O: Cooling B: Both	Enter number of isolation Zones	1: Inlet Vanes P: Variable Pitch V: VFD O: Other C: Cyclic

VENTILATION	OUTDOOR DAMPER	ECONOMIZER	DESIGN O.A. CFM
B: Air Balance C: Outside Air Cert. M: Outside Air Measure D: Demand Control N: Natural	A: Auto G: Gravity	A: Air W: Water N: Not Required ED: Economizer Control See Section 144(e)3	Enter Design Outdoor Air CFM. Note: This shall be no less than Column H on ME.H-3.

Nonresidential Compliance Form January 2001

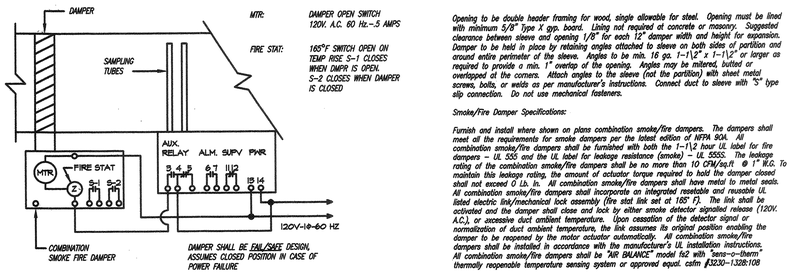

MTR: DAMPER OPEN SWITCH 120V. A.C. 60 Hz.-.5 AMPS

FIRE STAT: 165°F SWITCH OPEN ON TEMP RISE S-1 CLOSES WHEN DMPR IS OPEN. S-2 CLOSES WHEN DAMPER IS CLOSED

NOTE: DAMPERS SHALL BE INTERLOCKED WITH HEAT PUMPS SUCH THAT THE DAMPERS WILL CLOSE WHEN THE FAN IS SHUT OFF.

Opening to be double header framing for wood, single allowable for steel. Opening must be lined with minimum 5/8" Type X gyp. board. Lining not required at concrete or masonry. Suggested clearance between sleeve and opening 1/8" for each 12" damper width and height for expansion. Damper to be held in place by retaining angles attached to sleeve on both sides of partition and around entire perimeter of the sleeve. Angles to be min. 16 ga. 1-1\2" x 1-1\2" or larger as required to provide a min. 1" overlap of the opening. Angles may be mitered, butted or overlapped at the corners. Attach angles to the sleeve (not the partition) with sheet metal screws, bolts, or welds as per manufacturer's instructions. Connect duct to sleeve with "S" type slip connection. Do not use mechanical fasteners.

Smoke/Fire Damper Specifications:

Furnish and install where shown on plans combination smoke/fire dampers. The dampers shall meet all the requirements for smoke dampers per the latest edition of NFPA 90A. All combination smoke/fire dampers shall be furnished with both the 1-1\2 hour UL label for fire dampers – UL 555 and the UL label for leakage resistance (smoke) – UL 555S. The leakage rating of the combination smoke/fire dampers shall be no more than 10 CFM/sq.ft @ 1" W.G. To maintain this leakage rating, the amount of actuator torque required to hold the damper closed shall not exceed 0 Lb. In. All combination smoke/fire dampers shall have metal to metal seals. All combination smoke/fire dampers shall incorporate an integrated resettable and reusable UL listed electric link/mechanical lock assembly (fire stat link set at 165° F). The link shall be activated and the damper shall close and lock by either smoke detector signalled release (120V. A.C.), or accessive duct ambient temperature. Upon cessation of the detector signal or normalization of duct ambient temperature, the link assumes its original position enabling the damper to be reopened by the motor actuator automatically. All combination smoke/fire dampers shall be installed in accordance with the manufacturer's UL installation instructions. All combination smoke/fire dampers shall be "AIR BALANCE" model fs2 with "sens-o-therm" thermally reopenable temperature sensing system or approved equal. csfm #3230-1328:108

FIRE DAMPER DETAIL FOR REFERENCE ONLY. FIRE DAMPERS SHALL BE STATE FIRE MARSHAL APPROVED AND INSTALLED STRICTLY PER MANUFACTURERS PRINTED INSTRUCTIONS. MANUFACTURER'S INSTALLATION INSTRUCTIONS SHALL BE MADE AVAILABLE TO THE INSPECTING AUTHORITIES

SMOKE/FIRE DAMPER WIRING DIAGRAM

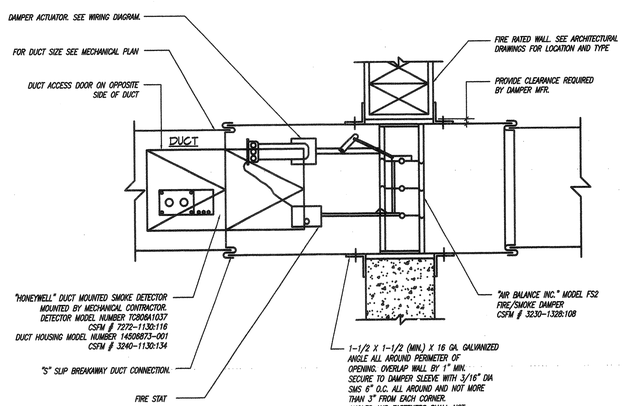

SMOKE/FIRE DAMPER MOUNTING DETAIL NTS 1

MANDATORY MEASURES

GENERAL

THE PERSON WITH OVERALL RESPONSIBILITY FOR CONSTRUCTION OR THE PERSON RESPONSIBLE FOR THE INSTALLATION OF REQUIRED MANUFACTURED DEVICES SHALL POST, OR MAKE AVAILABLE WITH THE BUILDING PERMIT(S) ISSUED FOR THE BUILDING, THE INSTALLATION CERTIFICATE(S) FOR MANUFACTURED DEVICES REGULATED BY THE APPLIANCE STANDARDS OR PART 6. SUCH INSTALLATION CERTIFICATE(S) SHALL BE MADE AVAILABLE TO THE ENFORCEMENT AGENCY FOR ALL APPROPRIATE INSPECTIONS. THESE CERTIFICATES SHALL:

(1) IDENTIFY FEATURES REQUIRED TO VERIFY COMPLIANCE WITH THE APPLIANCE AND PART 6.

(2) INCLUDE A STATEMENT INDICATING THAT THE INSTALLED DEVICES CONFORM TO THE APPLIANCE STANDARDS AND PART 6 AND THE REQUIREMENTS FOR SUCH DEVICES GIVEN IN THE PLANS AND SPECIFICATIONS APPROVED BY THE LOCAL ENFORCEMENT AGENCY.

(3) STATE THE BUILDING PERMIT NUMBER UNDER WHICH THE CONSTRUCTION OR INSTALLATION WAS PERFORMED.

THE BUILDER SHALL PROVIDE THE BUILDING OWNER OR THE PERSON(S) RESPONSIBLE FOR BUILDING MAINTENANCE (IN CASE OF MULTI-TENNANT OR CENTRALLY OPERATED BUILDINGS) AT OCCUPANCY THE FOLLOWING:

(1) OPERATING INFORMATION. A LIST OF THE HEATING, COOLING, WATER HEATING, AND LIGHTING SYSTEMS AND FEATURES, MATERIALS, COMPONENTS, MECHANICAL DEVICES, CONSERVATION OR SOLAR DEVICES INSTALLED IN THE BUILDING, AND INSTRUCTIONS ON HOW TO USE THEM EFFICIENTLY.

(2) MAINTENANCE INFORMATION. REQUIRED ROUTINE MAINTENANCE ACTION SHALL BE CLEARLY STATED AND INCORPORATED ON A READILY ACCESSIBLE LABEL. THE LABEL MAY BE LIMITED TO IDENTIFYING THE MAINTENANCE MANUAL. INSTRUCTIONS ON HOW TO USE THEM EFFICIENTLY.
EXCEPTION: RESIDENTIAL OCCUPANCIES.

(3) VENTILATION INFORMATION. A DESCRIPTION OF THE QUANTITIES OF OUTDOOR AND RECIRCULATED AIR THAT THE VENTILATION SYSTEM IS DESIGNED TO PROVIDE TO EACH AREA.
EXCEPTION: RESIDENTIAL OCCUPANCIES.

AFTER INSTALLING WALL, CEILING, OR FLOOR INSULATION, THE INSTALLER SHALL MAKE TO THE ENFORCEMENT AGENCY OR POST IN A CONSPICUOUS LOCATION IN THE BUILDING A CERTIFICATE SIGNED BY THE INSTALLER STATING THAT THE INSTALLATION IS CONSISTENT WITH THE PLANS AND THE REQUIREMENTS OF SECTION 10-103(a)2.A. THE CERTIFICATE SHALL ALSO STATE THE MANUFACTURER'S NAME AND MATERIAL IDENTIFICATION AND THE INSTALLED R-VALUE.

MANUFACTURED FENESTRATION PRODUCTS SHALL:

(1) HAVE TEMPORARY LABEL, NOT TO BE REMOVED BEFORE INSPECTION BY THE ENFORCEMENT AGENCY, LISTING THE CERTIFIED U-VALUE AND CERTIFYING THAT AIR INFILTRATION RATES NOT EXCEEDING THOSE SHOWN IN TABLE NO. 1-E.

(2) HAVE A PERMANENT LABEL LISTING THE THE U-VALUE, CERTIFYING ORGANIZATION AND RATING PROCEDURES.

SITE CONSTRUCTED DOORS, SKYLIGHTS, AND WINDOWS INCLUDING, BUT NOT LIMITED TO FIELD MANUFACTURED DOORS, SKYLIGHTS AND WINDOWS SHALL BE CAULKED BETWEEN THE DOOR, SKYLIGHTS OR WINDOW AND THE BUILDING AND SHALL BE WEATHERSTRIPPED.

EXCEPTION: UNFRAMED GLASS DOORS AND FIRE DOORS.

JOINTS AND OTHER OPENINGS IN THE BUILDING ENVELOPE THAT ARE POTENTIAL SOURCES OF AIR LEAKAGE SHALL BE CAULKED, GASKETED, WEATERSTRIPPED OR OTHERWISE SEALED TO LIMIT INFILTRATION AND EXFILTRATION.

ALL INSULATING MATERIALS SHALL BE INSTALLED IN COMPLIANCE WITH THE FLAMESPREAD RATING AND SMOKE DENSITY REQUIREMENTS OF SECTIONS 2602 AND 707 OF TITLE 24, PART 2.

ALL DUCTS SHALL BE INSTALLED AND INSULATED IN COMPLIANCE WITH SECTIONS 601, 603 AND 604 OF THE UMC.

OUTDOOR AIR SUPPLY AND EXHAUST EQUIPMENT SHALL BE INSTALLED WITH DAMPERS THAT AUTOMATICALLY CLOSE DURING PERIODS OF NON-USE OF THE AREAS SERVED BY THE EQUIPMENT.

THE PIPING FOR ALL SPACE CONDITIONING AND SERVICE WATER HEATING SYSTEMS SHALL BE INSULATED IN ACCORDANCE WITH TABLE 1-G.

EQUIPMENT AND SYSTEMS EFFICIENCY

ANY APPLIANCE FOR WHICH THERE IS A CALIFORNIA STANDARD ESTABLISHED IN THE APPLIANCE EFFICIENCY STANDARDS MAY BE INSTALLED ONLY IF THE MANUFACTURER HAS CERTIFIED TO THE ENERGY COMMISSION, AS SPECIFIED IN THOSE REGULATIONS, THAT THE APPLIANCE COMPLIES WITH THE APPLICABLE STANDARD FOR THAT APPLIANCE.

PIPING, EXCEPT THOSE CONVEYING FLUIDS AT TEMPERATURES BETWEEN 60°F AND 105°F, OR WITHIN HVAC EQUIPMENT, SHALL BE INSULATED IN ACCORDANCE WITH STANDARDS SECTION 123.

AIR HANDLING DUCT SYSTEMS SHALL BE CONSTRUCTED, INSTALLED, SEALED AND INSULATED AS PROVIDED IN CHAPTER 10 OF THE UNIFORM MECHANICAL CODE.

CONTROLS

EACH SPACE CONDITIONING SYSTEM SERVING BUILDING TYPES NOT SPECIFICALLY EXEMPT FROM THE REQUIREMENTS OF SECTION 112(a) SHALL BE INSTALLED WITH AN AUTOMATIC TIME SWITCH WITH AN ACCESSIBLE MANUAL OVERRIDE THAT ALLOWS OPERATION OF THE SYSTEM DURING OFF-HOURS FOR UP TO FOUR HOURS. THE TIME SWITCH SHALL BE CAPABLE OF PROGRAMMING DIFFERENT SCHEDULES FOR WEEKDAYS AND WEEKENDS; AND HAS PROGRAM BACKUP CAPABILITIES THAT PREVENT THE LOSS OF THE DEVICE'S PROGRAM AND TIME SETTING FOR AT LEAST 10 HOURS IF POWER IS INTERRUPTED.

EACH SPACE CONDITIONING SYSTEM SHALL BE INSTALLED WITH CONTROLS THAT TEMPORARILY RESTART AND OPERATE THE SYSTEM AS REQUIRED TO MAINTAIN A SETBACK HEATING AND COOLING THERMOSTAT SETPOINT.

EACH SPACE CONDITIONING ZONE SHALL BE CONTROLLED BY A THERMOSTAT WITHIN THAT ZONE AND SHALL BE ADJUSTABLE DOWN TO 55°F OR LOWER ON HEATING AND 85°F OR HIGHER ON COOLING. WHERE USED TO CONTROL BOTH HEATING AND COOLING, THE THERMOSTAT SHALL BE CAPABLE OF PROVIDING A DEAD BAND OF AT LEAST 5°F WITHIN WHICH THE SUPPLY OF HEATING AND COOLING IS SHUT OFF OR REDUCED TO A MINIMUM.

THERMOSTATS SHALL HAVE NUMERIC SETPOINTS DISPLAYED IN °F AND SHALL HAVE ADJUSTABLE SETPOINT STOPS ACCESSIBLE ONLY TO AUTHORIZED PERSONNEL.

HEAT PUMPS SHALL BE INSTALLED WITH CONTROLS TO PREVENT ELECTRIC RESISTANCE SUPPLIMENTARY HEATER OPERATION WHEN THE HEATING LOAD CAN BE MET BY THE HEAT PUMP AONE. ELECTRIC HEATER OPERATION IS PERMITTED DURING TRANSIENT PERIODS, SUCH AS START-UPS AND SETPOINT ADVANCE, WHEN CONTROLS ARE PROVIDED WHICH USE CONTROL MECHANISMS DESIGNED TO PRECLUDE UNNECESSARY OPERATION OF ELECTRIC RESISTANCE HEATING DURING THE RECOVERY PERIOD.

VENTILATION

CONTROLS SHALL BE PROVIDED TO ALLOW OUTSIDE AIR DAMPERS OR DEVICES TO BE OPERATED AT THE VENTILATION RATES SPECIFIED ON THESE PLANS. GRAVITY OR AUTOMATIC DAMPERS SHALL BE PROVIDED ON OUTSIDE AIR INTAKES AND DISCHARGES OF ALL SPACE CONDITIONING AND EXHAUST SYSTEMS. DAMPERS SHALL BE INTERLOCKED TO CLOSE ON FAN SHUTDOWN.

ALL VENTILATION SYSTEMS SHALL BE DOCUMENTED PER CALIFORNIA SAFETY CODE (TITLE 8, SECTION 5142(b)) TO PROVIDE THE MINIMUM VENTILATION RATE. SYSTEMS SHALL BE BALANCED TO THE QUANTITIES SPECIFIED ON THESE PLANS, IN ACCORDANCE WITH THE NATIONAL ENVIRONMENTAL BALANCING BUREAU (NEBB) PROCEDURAL STANDARDS (1983), OR ASSOCIATED AIR BALANCE COUNCIL (AABC) NATIONAL STANDARDS (1989).

SEISMIC ANCHORAGE

1. *THE SEISMIC ANCHORAGE OF MECHANICAL AND ELECTRICAL EQUIPMENT SHALL CONFORM TO C.C.R. TITLE 24, 1998 CBC SECTION 1633A AND TABLE 16A-O. ANCHORAGE DETAILS FOR ROOF/FLOOR MOUNTED EQUIPMENT SHALL BE SHOWN ON PLANS.*
2. *NO STRUCTURAL MEMBERS SHALL BE CUT , DRILLED OR NOTCHED WITHOUT PRIOR WRITTEN AUTHORIZATION FROM THE STRUCTURAL ENGINEER AND THE DIVISION OF THE STATE ARCHITECT.*
3. *COORDINATE ALL OPENINGS IN WALLS FLOORS, ROOF ,ETC. WITH ARCHITECTURAL AND STRUCTURAL DRAWINGS.*

COORDINATION

1. *THESE DRAWINGS ARE DIAGRAMATIC AND SHOWN IN GENERAL WHERE THE DUCTWORK, PIPING AND OTHER WORK SPECIFIED IN THE 15000 SECTIONS OF THE SPECIFICATIONS IS TO BE LOCATED. THE DRAWINGS DO NOT NECESSARILY INDICATE ANY AND ALL OFFSETS AND CONFIGURATIONS REQUIRED FOR COORDINATION WITH THE SPACE REQUIREMENTS OF OTHER TRADES. THE CONTRACTOR IS RESPONSIBLE FOR THE CORRECT PLACING, LOCATION, AND CONNECTION OF THIS WORK IN RELATION TO THE WORK OF OTHER TRADES. THE CONTRACTOR SHALL EXAMINE ALL MECHANICAL, ARCHITECTURAL, STRUCTURAL, ELECTRICAL, AND OTHER DRAWINGS THAT HAVE BEEN PREPARED FOR THIS PROJECT, AND ACCEPT SUCH CONDITIONS, AND MAKE ALLOWANCES FOR THEM IN PREPARING THE BID.*

EQUIPMENT SCHEDULE

EF 1, EF 2, EF 4, EF 13	"GREENHECK" MODEL SP-150 CEILING EXHAUST FAN. 300 CFM AT .25" E.S.P. 4.3 SONES. UNIT TO BE COMPLETE WITH BIRD SCREEN AND BACKDRAFT DAMPER. OPERATING WEIGHT 31 LBS.
EF 3, EF 11	"GREENHECK" MODEL SP-6 CEILING EXHAUST FAN. 75 CFM AT .25" E.S.P. 3.4 SONES. UNIT TO BE COMPLETE WITH BIRD SCREEN AND BACKDRAFT DAMPER. OPERATING WEIGHT 10 LBS.
EF 5, EF 6	"GREENHECK" MODEL SP-117 CEILING EXHAUST FAN. 150 CFM AT .25" E.S.P. 3.5 SONES. UNIT TO BE COMPLETE WITH BIRD SCREEN AND BACKDRAFT DAMPER. OPERATING WEIGHT 15 LBS.
EF 7, EF 8	"GREENHECK" MODEL SP-125 CEILING EXHAUST FAN. 200 CFM AT .25" E.S.P. 2.9 SONES. UNIT TO BE COMPLETE WITH BIRD SCREEN AND BACKDRAFT DAMPER. OPERATING WEIGHT 21 LBS.
EF 9, EF 10	"GREENHECK" MODEL SP-108 CEILING EXHAUST FAN. 80 CFM AT .25" E.S.P. 2.4 SONES. UNIT TO BE COMPLETE WITH BIRD SCREEN AND BACKDRAFT DAMPER. OPERATING WEIGHT 12 LBS.
EF 12	"GREENHECK" MODEL SP-150 CEILING EXHAUST FAN. 350 CFM AT .25" E.S.P. 3.7 SONES. UNIT TO BE COMPLETE WITH BIRD SCREEN AND BACKDRAFT DAMPER. OPERATING WEIGHT 31 LBS.

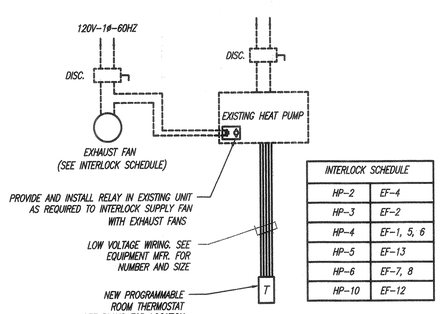

INTERLOCK SCHEDULE	
HP-2	EF-4
HP-3	EF-2
HP-4	EF-1, 5, 6
HP-5	EF-13
HP-6	EF-7, 8
HP-10	EF-12

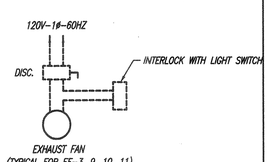

ELLER & ASSOCIATES
MECHANICAL CONSULTANTS
11660 DODD ST. YUCAIPA, CA. 92399
TEL. (909) 790-9140 FAX. (909) 790-6236

WIRING DIAGRAMS 2

AIR CONDITIONING LEGEND

SYMBOL	DESCRIPTION
	EXISTING DUCT OR EQUIPMENT TO REMAIN
	EXISTING DUCT OR EQUIPMENT TO BE REMOVED
	NEW DUCT OR EQUIPMENT
	DUCT WITH MANUAL VOLUME DAMPER
	NEW PIPING
	CEILING DIFFUSER (4-WAY UNLESS NOTED OTHERWISE)
	CEILING REGISTER (RETURN)
	CEILING REGISTER (EXHAUST)
T HP-1	THERMOSTAT WITH ZONE NUMBER
OSA	OUTSIDE AIR
	FIRE/SMOKE DAMPER
S.O.V.	SHUT-OFF VALVE
CD	CEILING DIFFUSER
CR	CEILING REGISTER
AC.LN.	ACOUSTIC LINER
SER	SIDEWALL EXHAUST REGISTER
S. OR SUPP.	SUPPLY
E. OR EXH.	EXHAUST
R. OR RET.	RETURN
(E)	EXISTING
FD-SD	SMOKE/FIRE DAMPER

GENERAL NOTES

1. *ALL DUCT DIMENSIONS ON DRAWINGS TO BE INSIDE CLEAR. VOLUME DAMPER.*
2. *ALL ROOM THERMOSTATS TO BE MOUNTED AT 48" ABOVE FINISHED FLOOR.*
3. *ALL INDIVIDUAL BRANCH SUPPLY, RETURN, OUTSIDE AIR, ETC. DUCTS SHALL BE EQUIPPED WITH A MANUAL PLANS AND INTERIOR ELEVATIONS.*
4. *ALL SQUARE ELBOWS TO BE PROVIDED WITH TURNING VANES.*
5. *COORDINATE LOCATION OF CEILING DIFFUSERS, REGISTERS, AND GRILLES, WITH ARCHITECTURAL RELECTED CEILING*
6. *FOR BUILDING LOCATIONS, DIMENSIONS, AND GRADE ELEVATIONS. SEE ARCHITECTURAL AND STRUCTURAL DRAWINGS*
7. *CONTRACTOR SHALL COORDINATE MOUNTING HEIGHT OF ALL DUCTS WITH RECESSED LIGHTING FIXTURES. WHERE NOTED ON DRAWINGS OR WHERE REQUIRED – DUCTS SHALL RUN BETWEEN LIGHTING FIXTURES.*
8. *ALL FLASHINGS AND COUNTERFLASHINGS FOR MECHANICAL WORK SHALL BE MADE WATER PROOF.*
9. *THESE DRAWINGS AND SPECIFICATIONS DO NOT INCLUDE NECESSARY COMPONENTS FOR CONSTRUCTION SAFTEY.*
10. *WHERE SITE CONDITIONS REQUIRE ALTERATIONS IN DUCT SIZE, THE REVISED DIMENSIONS SHALL PROVIDE A PRESSURE DROP OF NOT GREATER THAN .08" w.g. PER 100 FT. ROUND DUCTWORK MAY BE SUBSTITUTED FOR RECTANGULAR WHERE CLEARANCES ALLOW.*
11. *THE THERMOSTAT SHALL BE ADJUSTABLE IN THE TEMPERATURE RANGE OF 55° F TO 85° F, SHALL SEQUENCE HEATING AND COOLING, BE ADJUSTABLE TO 10° F BETWEEN HEATING AND COOLING, HAVE THE CAPABALITY TO TERMINATE ALL HEATING AT NO MORE THAN 70° AND TERMINATE ALL COOLING AT NOT LESS THAN 78° F.*

APPROVALS

ARCHITECT: LAWRENCE DAVID HIGGINSON NO. C19168 REN. 10-31-05 STATE OF CALIFORNIA PROFESSIONAL ARCHITECT

higginson + cartozian architects, inc.
architecture ◆ planning ◆ design
David Higginson, Architect
127 East State Street
Redlands, California 92373
ph. (909) 793-3100 fax (909) 793-3140

CONSULTANT: JAMES A. ELLER NO. M-21075 EXP. 6-30-05 MECHANICAL REGISTERED PROFESSIONAL ENGINEER STATE OF CALIFORNIA

1	REVISIONS
2	DATE:
3	DATE:

Arlanza Neighborhoods Initiative Project
Arlanza Youth & Family Resource Center
City of Riverside

SHEET TITLE: MECHANICAL SCHEDULES DETAILS

DRAWN BY: DN

CHECKED BY: JE

DATE:

SHEET NO: M1.0

REMODEL KEYNOTES

1. POINT OF CONNECTION TO EXISTING HEAT PUMP. VERIFY EXACT SIZE AND LOCATION IN FIELD. PROVIDE ALL OFFSETS AND TRANSITIONS REQUIRED TO MAKE CONNECTION.
2. NEW CEILING MOUNTED EXHAUST FAN WITH 7"ø DUCT UP THROUGH ROOF TO ROOF JACK. SEE ARCHITECTURAL DRAWINGS FOR ROOF PATCHING REQUIREMENTS.
3. EXISTING WALL MOUNTED HEAT PUMP. PROVIDE AND INSTALL NEW THERMOSTAT AND EXHAUST FAN INTERLOCK RELAY.
4. NEW PROGRAMMABLE HEAT PUMP THERMOSTAT WITH TIMED OVERRIDE.
5. ALL DUCTWORK ABOVE HARD CEILINGS SHALL BE RIGID DUCT. NO FLEX DUCT ALLOWED.
6. OCCUPANCY SEPARATION WALL. SEE ARCHITECTURAL DRAWINGS FOR EXACT LOCATION. PROVIDE SMOKE/FIRE DAMPER IN ALL DUCT PENETRATIONS.
7. FIRE-RESISTIVE CORRIDOR WALL. SEE ARCHITECTURAL DRAWINGS FOR EXACT LOCATION. PROVIDE SMOKE/FIRE DAMPER IN ALL DUCT PENETRATIONS.
8. SMOKE/FIRE DAMPER. SEE DETAIL 1/M-1.0.

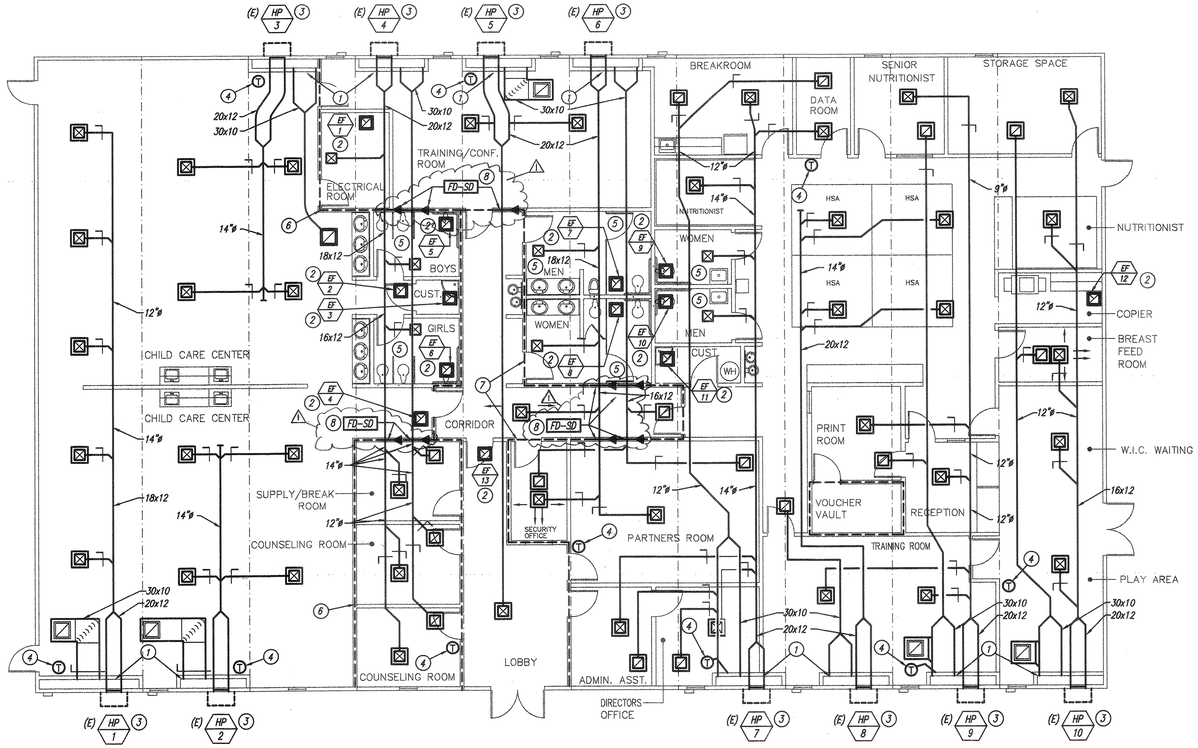

MECHANICAL FLOOR PLAN

1/8" = 1'-0" | 1

DIFFUSER / REGISTER SCHEDULE

UNIT	ROOM NAME	TERMINAL DEVICE QTY.	TERMINAL DEVICE SIZE	TERMINAL DEVICE CFM (EA.)	BRANCH DUCT SIZE	ROOM TOTALS SUPPLY	ROOM TOTALS RETURN	ROOM TOTALS EXHAUST
(E) HP-1	CHILD CARE CENTER	(5) (1)	12x12 C.D. 20x20 C.R.	300 S. 1200 R.	10"ø S. 30x10	1500	1200	300
(E) HP-2	CHILD CARE CENTER	(4) (1)	12x12 C.D. 20x20 C.R.	380 S. 1220 R.	12"ø S. 30x10	1520	1220	300
(E) HP-3	CHILD CARE CENTER	(4) (1)	12x12 C.D. 20x20 C.R.	380 S. 1220 R.	12"ø S. 30x10	1500	1220	300
(E) HP-4 (1440 CFM.S.)	ELECTRICAL ROOM	(1) (1)	12x12 C.D. 12x12 C.R.	310 S. 310 R.	9"ø S. 9"ø R.	310	310	
	BOYS	(1) (1)	8x8 C.D. EXH FAN	100 S. 150 E.	6"ø S.	100		150
	GIRLS	(1) (1)	8x8 C.D. EXH FAN	100 S. 150 E.	6"ø S.	100		150
	SUPPLY/BREAK ROOM	(1) (1)	12x12 C.D. 12x12 C.R.	310 S. 310 R.	9"ø S. 9"ø R.	310	310	
	COUNSELING ROOM	(1) (1)	12x12 C.D. 12x12 C.R.	310 S. 310 R.	9"ø S. 9"ø R.	310	310	
	COUNSELING ROOM	(1) (1)	12x12 C.D. 12x12 C.R.	310 S. 310 R.	9"ø S. 9"ø R.	310	310	
(E) HP-5 (1500 CFM.S.)	TRAINING/CONF. ROOM	(2) (1)	14x14 C.D. 20x20 C.R.	500 S. 1000 R.	12"ø S. 24x10	1000	1000	
	LOBBY	(1) (1)	14x14 C.D. 14x14 C.R.	500 S. 350 E.	12"ø S. 12"ø E.	500		350
(E) HP-6 (1430 CFM.S.)	MEN	(1) (1)	8x8 C.D. EXH FAN	170 S. 200 E.	8"ø S.	170		200
	WOMEN	(1) (1)	8x8 C.D. EXH FAN	170 S. 200 E.	8"ø S.	170		200
	CORRIDOR	(1) (1)	10x10 C.D. 10x10 C.R.	250 S. 190 R.	9"ø S. 9"ø R.	250	190	
	PARTNERS ROOM	(1) (1)	18x18 C.D. 18x18 C.R.	700 S. 700 R.	14"ø S. 14"ø R.	700	700	
	SECURITY OFFICE	(1) (1)	8x8 C.D. 8x8 C.R.	140 S. 140 R.	7"ø R. 7"ø R.	140	140	
(E) HP-7 (1440 CFM.S.)	BREAKROOM	(1) (1)	12x12 C.D. 12x12 C.R.	350 S. 350 R.	12"ø S. 12"ø R.	350	350	
	DATA ROOM	(1) (1)	10x10 C.D. 10x10 C.D.	200 S. 200 R.	8"ø S. 8"ø R.	200	200	
	NUTRITIONIST	(1)	10x10 C.D.	200 S.	8"ø S.	200		
	WOMEN	(1) (1)	8x8 C.D. EXH FAN	50 S. 90 E.	5"ø S.	50		90
	MEN	(1) (1)	8x8 C.D. EXH FAN	50 S. 90 E.	5"ø S.	50		90
	ADMIN. ASST.	(1) (1)	10x10 C.D. 10x10 C.R.	270 S. 270 R.	9"ø S. 9"ø R.	270	270	
	DIRECTORS OFFICE	(1) (1)	12x12 C.D. 12x12 C.R.	320 S. 320 R.	10"ø S. 10"ø R.	320	320	
(E) HP-8	HSA	(4) (1)	12x12 C.D. 20x20 C.R.	360 S. 1220 R.	12"ø S. 30x10	1440	1240	200
(E) HP-9 (1500 CFM.S.)	SENIOR NUTRITIONIST	(1) (1)	10x10 C.D. 10x10 C.R.	250 S. 250 R.	9"ø S. 9"ø R.	250	250	
	PRINT ROOM	(1) (1)	10x10 C.D. 10x10 C.R.	250 S. 250 R.	9"ø S. 9"ø R.	250	250	
	RECEPTION	(1)	10x10 C.D.	200 S.	8"ø S.	200		200
	TRAINING ROOM	(2) (1)	14x14 C.D. 18x18 C.R.	400 S. 800 R.	12"ø S. 24x10	800	800	
(E) HP-10 (1450 CFM.S.)	STORAGE SPACE	(1) (1)	10x10 C.D. 10x10 C.R.	250 S. 250 R.	9"ø S. 9"ø R.	250	250	
	BREAST FEED ROOM	(1) (1)	8x8 C.D. 8x8 C.R.	130 S. 130 R.	7"ø S. 7"ø R.	130	130	
	NUTRITIONIST	(1)	10x10 C.D.	270 S.	9"ø S.	270		
	W.I.C. WAITING/ PLAY AREA	(2) (1)	14x14 C.D. 18x18 C.R.	400 S. 800 R.	12"ø S. 24x10	800	800	
	COPIER	(1)	EXH FAN	300 E.				300

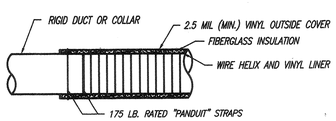

INSTALLATION NOTES:

1. SLIP WIRE HELIX AND VINYL LINER OVER RIGID DUCT OR COLLAR.
2. PULL INSULATION AND OUTSIDE COVER BACK.
3. SECURE WIRE HELIX AND LINER TO DUCT WITH "PANDUIT" STRAP RATED FOR 175 LBS.
4. PULL THE INSULATION AND OUTSIDE COVER OVER THE TOP OF THE "PANDUIT" STRAP AND TUCK THE COVER UNDER THE LINER.
5. SECURE A SECOND 175 LB. RATED "PANDUIT" STRAP AROUND THE OUTSIDE COVER/ INSULATION/LINER. NO FIBERGLASS INSULATION SHALL BE EXPOSED TO THE AIR STREAM OR OUTSIDE OF DUCT.

FLEXIBLE DUCT CONNECTION DETAIL | NTS | 2

NOTES:

1. PAINT ALL SURFACES BEHIND DIFFUSER OR REGISTER FLAT BLACK. NO SHOW OF GALVANIZED METAL WILL BE ACCEPTED.

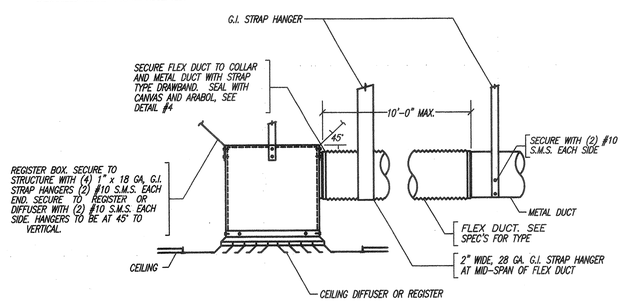

CEILING DIFFUSER / REGISTER DETAIL | NTS | 3

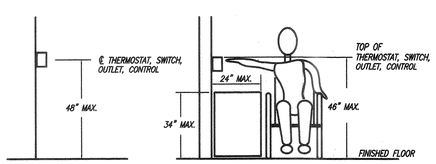

THERMOSTAT MOUNTING DETAIL | NTS | 4

ELLER & ASSOCIATES
MECHANICAL CONSULTANTS
11660 DODD ST. YUCAIPA, CA. 92399
TEL. (909) 790-9140 FAX. (909) 790-6236

APPROVALS

ARCHITECT:
LICENSED ARCHITECT DAVID HIGGINSON NO. C19169 EXP. 12-31-05 STATE OF CALIFORNIA

higginson + cartozian architects, inc.
architecture ◆ planning ◆ design
David Higginson, Architect
127 East State Street
Redlands, California 92373
ph. (909) 793-3100 fax (909) 793-3140

REVISIONS
DATE: 12-16-05
DATE:

REGISTERED PROFESSIONAL ENGINEER JAMES A. ELLER No. M-21075 6-30-05 MECHANICAL STATE OF CALIFORNIA

Arlanza Neighborhoods Initiative Project
Arlanza Youth & Family Resource Center
City of Riverside

SHEET TITLE: MECHANICAL PLANS & DETAILS

DRAWN BY: DN
CHECKED BY: JE
DATE:
SHEET NO: M2.0

MECHANICAL SPECIFICATIONS

1. GENERAL

The General Provisions of the Contract, including the General Conditions, Supplementary General Conditions and Division 1 General Requirements apply to work specified in this Section.

2. SCOPE OF WORK

This section of the Specifications includes the furnishing of all labor, materials and equipment for the complete system of ventilation within the intent and meaning of the plans and specifications.

2.1 Ceiling exhaust fans

2.2 Supply, return and exhaust ductwork, insulation supports, etc. as shown on drawings and/or as required for complete working system.

2.6 Flashings, closures and other items required for a water proof installation.

2.7 Control System.

2.8 Interlock with existing piping and controls.

2.9 Demolition of existing equipment and ductwork.

2.10 Written operating and maintenance instructions.

2.11 Adjustment and balancing of equipment.

2.12 Guarantees.

3. GENERAL REQUIREMENTS:

3.1 No holes will be allowed in any structural members without the written approval of the Structural Engineer.

3.2 Guarantee:

Furnish a written guarantee for a period of one year from date of acceptance of work by Owner.

3.3 Materials:

3.3.1 All materials and equipment shall be new and in perfect condition when installed, of the best grade and of the same manufacturer throughout for each class or group of equipment. Materials not identified by name or manufacturer shall be comparable to that specified and as approved by the Architect. Maintain adequate protection for all materials and equipment stored at job site. Store all pipe at least 4" above grade.

3.3.2 Unless otherwise directed by the Architect in writing or specified, or indicated, all materials and equipment shall be installed in accordance with manufacturer's recommendations and instructions.

3.3.3 Mechanical equipment shall bear the manufacturer's label or name plate showing all performance characteristics. All valves, pipe fittings, etc., shall bear the manufacturer's trademark or identifying markings.

3.3.4 All materials of similar function or service shall be of one manufacturer.

3.4 Review and Acceptance of Materials:

3.4.1 Within thirty (30) days after award of the contract, submit to the Architect four (4) copies of a complete list of material and equipment proposed for the job including all rating and capacity data, sizes, grade, electrical date, part or catalog number, manufacturer's name, pictures, etc.

3.4.2 Submit with the above list, four (4) copies of complete shop drawings for all fabricated equipment and four (4) copies of complete control diagrams with descriptions and details.

3.5 Safety Conditions:

All materials, methods, equipment and installation shall comply with the requirements of "Occupational Safety and Health Act" Standards.

3.6 Verification of Dimensions:

3.6.1 All indicated dimensions are approximate and are given for estimate purposes only. Before proceeding with the work the Contractor shall carefully check and verify all dimensions, sizes, required clearances and shall assume full responsibility for the fitting of all equipment and materials herein required to other parts of the work and to the work of other trades.

3.6.2 The drawings are essentially diagrammatic to the extent that all offsets, bends, special fittings and locations are not exactly located.

3.6.3 Comply with all contract documents in laying out work and equipment. Coordinate the work of this section with the work of other trades and all joo conditions.

3.6.4 The installation of valves, thermometers, gauges, cleanouts, dampers, duct access doors or other indicating equipment or specialties requiring reading, adjustment, inspection, repairs, removal or replacement shall be conveniently and accessibly located with reference to the finished building.

3.6.5 Where wall and ceiling access doors are required, but not shown and required for access, doors shall be furnished and installed under this section without additional cost to the Owner as directed by Owner. Coordinate this requirement with appropriate section of specifications.

3.7 Machinery Guards:

All moving parts of machinery, such as shaft couplings, belt drives, etc., shall be adequately covered with removable metal guards to protect personnel from possible injury. Guards shall be furnished by the equipment manufacturer and shall comply with applicable requirements of the State of California Industrial Safety Act and O.S.H.A.

4. PRODUCTS

4.1 Sheet Metal:

4.1.1 Layout: Drawings are in part diagrammatic and are intended to convey the scope of work and indicate the general arrangement of equipment, ducts and piping. Mechanical trades shall follow these drawings in laying out their work, consult general construction drawings to familiarize themselves with all conditions affecting their work and shall verify spaces in which their work will be installed. Where job conditions require changes in indicated locations and arrangement, make such changes at no additional cost to Owner.

4.1.2 Description: Includes sheet metal plenums housings, ductwork, manually operated dampers, equipment connections and fire dampers.

4.1.3 Materials: All sheet metal fabricated of galvanized steel except supports, bar or angle reinforcing damper rods, which shall be of uncoated, mild steel, painted with one (1) coat of primer.

4.1.4 Low Pressure Duct Construction: Gauges, transverse joints, spacing of joints and intermediate bracing shall be as tabulated below, in which transverse joints are shown SS for S-slip, DS for drive slip, PS for pocket slip, BS for bar slip. PS and BS lapped and riveted at corners. Intermediate bracing where shown may be omitted, if duct sections of 4' or less are used. Maximum spacing of bracing 4'. 1-1/2"x1-1/2"

4.1.5 Ductwork shall be fabricated and installed in accordance with the latest S.M.A.C.N.A. low pressure duct construction standards. Round ducts shall be spiral type with matching fittings as manufactured by "United Sheet Metal" and sheet gauges as per S.M.A.C.N.A.

Schedule:

Shape	Size (in.)	Gauge	Joint	Transverse Bracing
Round	Up to 10"	26	2" slip	None
Round	11 to 30	24	2" slip	None
Rectangular	Thru 12"	26	Drive slip, "S" slip or pocket lock	None
Rectangular	13 to 32	22	Drive slip, "S" slip or 1" pocket lock	None
Rectangular	33 to 54	22	1-1/2" pocket lock or bar slip	x1/8"

Where gauges of metal are indicated or shown on drawing or herein specified, they shall govern over the above.

4.1.6 Change in Direction and Size: Elbows with throat radius 75 percent of the duct dimension in the plane of the bend, except where otherwise detailed. Ductu rns used at all mitered elbows. Transitions with lengths not shorter than those shown or with a maximum 30 degree converging angle or 20 degree diverging angle.

4.1.7 Joints: Airtight for the purpose intended. Sealed with 6 oz. canvas strips and Arabol or high velocity duct sealer. Pittsburgh lock or double seams excepted. Arabol adhesive shall be used full strength with no dilution. Maximum system air leakage not to exceed 5 percent.

4.1.8 Supports: Ducts shall be secured against displacement and vibration as detailed in the "Guidelines for Seismic Restraints of Mechanical Systems and Plumbing Piping Systems" published by "The Sheet Metal Industry Fund of Los Angeles, California" (SMACNA) and "The Plumbing and Piping Industry Council, Inc., Los Angeles, California" (PPIC).

4.1.9 Turning vanes shall be double wall type. Single thickness vanes are not acceptable and will be removed at Contractor's expense.

4.1.10 Neck connection of diffuser or register shall not be made directly into main trunks. Where direct duct neck connections are required due to space limitations, main duct shall be lined 5' each side of neck connection.

4.1.11 Girth seams shall be at intervals of 48" or less. All sides of ducts shall be cross broken. Where required to prevent sagging and vibration, ducts shall be stiffened on the outside with flat bars or angles.

4.1.12 Round elbows shall be of 4 piece construction, same gauge as adjacent duct. Round "tye" fittings to have 45 degree side take-offs tapped into reducing transition. Each take-off shall include manual volume damper with locking quadrant. Round ductwork shall be spiral construction unless otherwise noted.

4.1.13 Register Boxes: Sheet metal register boxes shall be provided for all ceiling diffusers and registers. Register boxes shall be lined with 1" duct liner.

4.1.14 Contractor shall verify duct sizes and clearances on job prior to fabricating ductwork. Provide transitions and offsets as required to install the work and allow clearance for other trades.

4.2 Thermal Duct Insulation:

4.2.1 Insulate all supply ductwork as required below with PG Superfine ductwrap, or acceptable alternate in Johns-Manville or C.S.G. one pound density with foil-scrim-kraft vapor barrier facing with 2" tabs on one end. Insulation shall be neatly cut and fitted to duct surface with facing tab overlapping all joints 2" and secured with outward clinch staples 4" o.c. All transverse and longitudinal joints, seams and penetrations of the vapor barrier facing shall be covered with 4 oz. canvas stripping tape applied in and sealed with Fosters #60-30 mastic. Where supply and return ducts are acoustically lined, exterior duct wrap insulation will not be required. Flame spread not over 25. Fuel contributed not over 50. Smoke developed not over 50. Insulate return ducts identical to supply ducts where required below:

All supply ducts shall be covered with 2" insulation; for return ducts cover with 1" insulation.

4.3 Acoustical Lining:

4.3.1 All supply, exhaust and return plenums and air ducts 10'-0" from the air conditioning units and fans unless noted otherwise on the plan shall be internally lined with 1" thick, 1-1/2" lb. density duct liner. Duct liner shall be secured with "Tuff-Bond" No. 6 adhesive and "Omark" capacitor welded studs with holding washers at 12" o.c. and 1-1/2" from each joint. All ends, seams and edges to be sealed with 4 oz. canvas saturated in lagging and adhesive. Manufacturer: Johns-Manville Lina-Coustic or acceptable alternative by Certainteed/Saint Gobain or Fiberglass. (Duct sizes given on the plan are net inside dimension.) No acoustic liner allowed downstream of final filters.

4.4 Exhaust fan: As specified on plans or acceptable alternate.

5.1 Tests:

5.1.1 Work under this section shall include the complete and total balancing of all equipment.

5.1.2 The Contractor shall procure the services of an air balance and testing agency, specializing in balancing and testing of heating, ventilating and air conditioning systems. All work by this agency shall be done under direct supervision of a qualified heating and ventilating engineer employed by them. All instruments used by this agency shall be accurately calibrated and maintained in good working order.

5.1.3 Air balance and testing shall not begin until system has been completed and is in full working order. The Contractor shall put all heating, ventilating and air conditioning systems and equipment into full operation and shall continue the operation of same during each working day of testing and balancing.

5.1.4 Upon completion of the air conditioning system, the air balance agency shall perform the following tests, compile the test data and submit five (5) copies of the complete test data to the Contractor for forwarding to the Architects for evaluation and acceptance.

5.1.5 Testing Procedure: The air balance agency shall perform the following test and balance systems in accordance with the following requirements:

Test and adjust blower rpm to design requirements.

Test and record motor full load amperes.

Test and record system static pressure, suction and discharge.

Test and record filter static pressures.

Adjust flow rates in duct mains.

Adjust outside air volumes for each unit.

Adjust diffusers, registers and grilles to within 5% of design requirements.

5.1.6 Supply fan speed adjustment: Adjust supply fan speed as required to provide supply volumes indicated on plans at the maximum (redline) filter static pressure. Filter redlines are to be established so that the change in supply volume over the range of filter service life will be less than 15%.

5.2 Prestart-Up Cleaning:

5.2.1 Thoroughly clean all parts of the equipment, appurtenances, etc., covered under this contract. Exposed parts which are to be painted shall be thoroughly cleaned of cement, plaster and other objectionable materials.

5.2.2 Thoroughly clean interior surfaces of existing ductwork at points of connection to the existing system prior to completing the connection.

5.3 Special Requirements:

5.3.1 Service and Maintenance: Include in bid, complete service and maintenance of entire installation for a period of not less than 120 days after acceptance of the project. This work shall include all lubrication; filter inspection, service and replacement; control service and adjustment, equipment inspection, service and adjustment; drive service, cleaning strainers, flushing systems or equipment; any and all parts replacements; and all service and maintenance required to keep the entire installation in first class operating conditions at all times and to the entire satisfaction of the Owner. Keep complete and approved service records during this period showing all work done, adjustments made, replaced, dates of service, etc., and shall notify the Owner each time he visits the job. This service and maintenance shall be in addition to the one (1) year guarantee on all materials and workmanship and performance.

5.3.2 Damage by Leaks: The Contractor shall be responsible for all damage to equipment and premises caused by leaks or breaks in equipment for a period of one (1) year after date of acceptance of the project.

5.3.3 Unless otherwise directed and/or specified, and/or indicated, all materials, equipment, etc., shall be installed in accordance with manufacturer's recommendations and instructions.

5.3.4 Mechanical equipment shall bear the manufacturer's label or nameplate showing performance characteristics. All valves, pipe, fittings, etc., shall bear the manufacturer's trademark or identifying markings.

5.3.5 All materials of similar class or service shall be of one manufacturer.

5.4 Completion:

5.4.1 When the installation is complete and adjustments specified herein have been made, the system shall be operated for a period of one week, during which time it shall be demonstrated as being completed and operating in conformance with these specifications.

5.4.2 Execution:

Conformation to requirements of Uniform Mechanicol Code 2001 California Building Standards Code, local and state codes and ordinances, including the Uniform City and County Building Codes, State, County and City Health Department Ordinances, State of California Office of Statewide Health Planing Development.

Apply and pay for all permits, fees, inspections, examinations and tests required by any of the legally constituted authorities.

Submission of four (4) brochures containing certified manufacturer's drawings, performance data, rough-in dimensions and cuts of all equipment and specialties within 30 days after contract is signed. Partial or incomplete submittals will be rejected and shall be returned to Contractor for resubmittal.

a. Submittals shall be in a neat form and shall contain a complete list, in index form, of the manufacturer's names, cuts of equipment, performance data, catalog num bers and trade names as required to properly identify the materials and equipment to be furnished under these specifications.

b. Data submitted for each item shall be properly identified by reference to item number of paragraphs in the specifications and drawings equipment schedule designation.

c. Any deviation from item as specified shall be clearly indicated on the submittal and noted as such.

5.4.3 Record as-built drawings showing locations and size of all concealed pipe and ducts shall be kept up-to-date and available for inspection at all times during construction. These shall be signed by the General Contractor and Heating, Ventilation and Air Conditioning Contractor to certify their accuracy and shall be submitted to the Architect prior to final acceptance of the work.

5.4.4 Protect all work, material:- and equipment from damage during progress of work. Replace all damaged or defective work, materials and equipment without additional cost to Owner and before requesting final acceptance.

5.4.5 Duct layout as shown on drawings is subject to modifications, by Contractor, without extra cost as required to clear other items of construction; the Contractor shall coordinate the work of this section with that of other sections as to avoid interferences by other crafts involved.

5.4.6 Contractor shall visit site prior to bidding and fully acquaint himself with all conditions affecting installation of the proposed system. Failure to do so shall not relieve Contractor of responsibility of providing complete, operating and acceptable systems.

END OF SECTION

APPROVALS

ARCHITECT: LICENSED ARCHITECT DAVID HIGGINSON NO. C19168 REN. 10-31-08 STATE OF CALIFORNIA

3	REVISIONS
2	DATE:
1	DATE:

higginson + cartozian architects, inc.
architecture ◆ planning ◆ design
David Higginson, Architect
127 East State Street
Redlands, California 92373
ph. (909) 793-3100 fax (909) 793-3140

CONSULTING PROFESSIONAL ENGINEER JAMES A. ELLER No. M-21075 REGISTERED MECHANICAL ENGINEER EXP. 6-30-07 STATE OF CALIFORNIA

Arlanza Neighborhoods Initiative Project
Arlanza Youth & Family Resource Center
City of Riverside

SHEET TITLE: MECHANICAL SPECIFICATIONS

DRAWN BY: DN

CHECKED BY: JE

DATE:

SHEET NO: M3.0

GENERAL NOTES

1. THESE PLANS ARE DIAGRAMMATIC ONLY. FOLLOW AS CLOSELY AS POSSIBLE. REFER TO ARCHITECTURAL DRAWINGS FOR DETAILS, STRUCTURAL DETAILS, EXACT EQUIPMENT AND OUTLET LOCATIONS.
2. DO NOT SCALE THE ELECTRICAL DRAWINGS FOR LOCATIONS OF ANY ELECTRICAL DEVICES OR EQUIPMENT,
3. CONSTRUCTION TERMINOLOGY, AND THE STANDARDS OF INSTALLATION REQUIRED BY THESE CONTRACTOR DOCUMENTS ARE BASED ON PUBLISHED STANDARDS OF N.E.C.A. (NATIONAL ELECTRICAL CONTRACTORS ASSOCIATION), NATIONAL ELECTRICAL SAFETY CODE, AMERICAN NATIONAL STANDARDS INSTITUTE DOCUMENTS, NATIONAL ELECTRICAL MANUFACTURERS ASSOCIATION, UNDERWRITERS LABORATORIES, AND THE CALIFORNIA ELECTRICAL CODE. SUBMITTAL OF BID INDICATES THE CONTRACTOR IS FAMILIAR OF THESE STANDARDS AND THE REQUIREMENTS NECESSARY TO PERFORM ALL THE WORK AS SET FORTH IN THESE CONTRACT DOCUMENTS AND ACCEPTS THE CONDITIONS.
4. CONTRACTOR SHALL VERIFY EXISTING SITE CONDITIONS, SERVICE REQUIREMENTS AND EXACT LOCATIONS OF SERVICE FACILITIES BEFORE SUBMITTING BID. SUBMITTAL OF BID INDICATES CONTRACTOR ACCEPTS THE CONDITIONS UNDER WHICH HE SHALL BE REQUIRED TO PERFORM HIS WORK.
5. ALL UTILITY WORK (POWER, TELEPHONE, CABLE TELEVISION) SHALL BE IN COMPLIANCE WITH THESE DRAWINGS AND THE REQUIREMENTS OF THE SERVING UTILITY COMPANY. IT SHALL BE THE CONTRACTOR'S RESPONSIBILITY TO CONTACT THE SERVING UTILITY TO RECEIVE COMPLETE INFORMATION ON THEIR REQUIREMENTS PRIOR TO THE SUBMISSION OF THE BID. THE ACT OF SUBMITTING THE BID SHALL CONSTITUTE ACCEPTANCE OF FULL RESPONSIBILITY BY THE CONTRACTOR TO INSTALL SERVICE IN COMPLIANCE WITH THE SERVING UTILITY AND THESE CONTRACT DOCUMENTS.
6. THE CONTRACTOR SHALL INSTALL THE SERVICE IN COMPLIANCE WITH THE SERVING UTILITY COMPANY, AND SHALL PAY ALL CHARGES LEVIED BY THE SERVING UTILITY COMPANY FOR HIS SERVICE EXCEPT THE FIRST BILLING DEPOSIT. WHERE THE CONTRACT DOCUMENTS ARE MORE RESTRICTIVE, THE DOCUMENTS SHALL GOVERN.
ALL ITEMS SUCH AS SERVICE CONDUIT, CONDUCTORS, DUCTS, CONCRETE PADS, TRANSFORMERS, RISERS, MANHOLES, PULL BOXES, AND PROTECTIVE COVERING FROM SERVICE LOCATION SHALL BE INSTALLED AND VERIFIED WITH THE SERVING UTILITY COMPANY.
7. ELECTRICAL CONTRACTOR SHALL PAY FOR AND SECURE ALL NECESSARY BUILDING PERMITS, UTILITY COMPANY CHARGES. IF REQUIRED, CONTRACTOR SHALL COORDINATE AND PAY FOR ALL TEMPORARY ELECTRICAL SERVICE CHARGES WITH THE BUILDING DEPARTMENT, SERVING UTILITY, AND OWNER.
8. SUBMIT SHOP DRAWINGS FOR ALL MAJOR PIECES OF ELECTRICAL EQUIPMENT, WHICH INCLUDES, BUT NOT LIMITED TO: SWITCHGEAR, LIGHTING FIXTURES, CONTROL PANELS, AND ELECTRICAL DEVICES.
9. SHOP DRAWINGS SHALL BE SUBMITTED WITHIN THIRTY DAYS AFTER AWARD OF THE CONTRACT. THE CONTRACTOR SHALL SUBMIT EIGHT COPIES OF A COMPLETE LIST OF MATERIALS AND EQUIPMENT INCLUDING MANUFACTURER AND MODEL NUMBER PROPOSED FOR THE JOB. SHOP DRAWINGS SHALL INCLUDE JOB DESCRIPTION, ARCHITECT AND ENGINEER IDENTIFICATION, AND ALL DATA WITH CAPACITIES, SIZES, DIMENSIONS, CATALOG NUMBERS, MANUFACTURER'S BROCHURES, AND SUPPORT DATA.
10. THE CONTRACTOR SHALL HAVE THE OPTION OF ROUTING RACEWAYS UNLESS OTHERWISE NOTED AND SHALL BE COORDINATED WITH OTHER TRADES.
11. CONTRACTOR SHALL PROVIDE ALL J-BOXES, PULL BOXES, ELLS, OFFSETS ETC., FOR A COMPLETE, CODE APPROVED, INSTALLATION OF ALL CONDUIT. FOOTAGE SHOWN ON ELECTRICAL SINGLE LINES AND RISER DIAGRAMS ARE FOR CALCULATION PURPOSES ONLY, AND ARE NOT FOR BIDDING PURPOSES OR MATERIAL TAKEOFF. IT SHALL BE THE RESPONSIBILITY OF THE CONTRACTOR TO REVIEW AND TO COORDINATE WITH MECHANICAL, FIRE PROTECTION, AND PLUMBING DRAWINGS FOR DUCTS, LINES, AND EQUIPMENT.
12. THE CONTRACTOR SHALL PERFORM HIS WORK IN ACCORDANCE WITH ALL GOVERNING STATE, COUNTY, LOCAL CODES, O.S.H.A., THE PRESENTLY ADOPTED NATIONAL ELECTRICAL CODE, AND PRESENTLY ADOPTED CALIFORNIA ELECTRICAL CODE (C.E.C.)
13. THE CONTRACTOR SHALL COORDINATE WITH OTHER TRADES AS TO THE EXACT LOCATION OF THEIR RESPECTIVE EQUIPMENT. SUPPLY POWER AND MAKE CONNECTIONS TO MOTORS AND EQUIPMENT REQUIRING ELECTRICAL CONNECTIONS AS INDICATED ON THE SINGLE LINE DIAGRAM, ELECTRICAL DRAWINGS, AND DRAWINGS OF OTHER TRADES. REVIEW THE DRAWINGS OF OTHER TRADES FOR CONTROL DIAGRAMS, SIZE AND LOCATION OF EQUIPMENT. DISCONNECT SWITCHES, STARTERS, WIRING, CONTROLS, AND CONDUIT FOR MECHANICAL AND PLUMBING OPERATIONS SHALL BE PROVIDED. THE CONTRACTOR SHALL BE RESPONSIBLE FOR OBTAINING MANUFACTURER'S SHOP DRAWINGS PRIOR TO ROUGH-IN IN ALL CONDUIT TO THIS EQUIPMENT.
14. CONTRACTOR SHALL USE MATERIALS THAT ARE NEW, AND OF THE SAME MANUFACTURER FOR FOR EACH CLASS OR GROUP OF EQUIPMENT. MATERIALS SHALL BE LISTED AND APPROVED BY THE (U.L.) UNDERWRITER'S LABORATORIES FOR THE USE AND ENVIRONMENT, AND SHALL BEAR THE INSPECTION LABEL WHERE SUBJECT TO APPROVAL. MATERIALS SHALL MEET WITH THE APPROVAL OF THE DIVISION OF INDUSTRIAL SAFETY, AND ALL GOVERNING BODIES HAVING JURISDICTION. MATERIALS SHALL BE MANUFACTURED IN ACCORDANCE WITH APPLICABLE STANDARDS ESTABLISHED BY A.N.S.I., U.L., N.E.M.A., AND N.B.F.U. INSTALL PER MANUFACTURER'S RECOMMENDATIONS.
15. THE STRUCTURAL ENGINEER SHALL DIRECT THE EXACT METHOD AND LOCATION OF CONDUIT PENETRATION AND OPENING IN CONCRETE WALLS OR FLOORS OR STRUCTURAL STEEL MEMBERS. PERFORM CORING, SAW CUTTING, PATCHING, AND REFINISHING OF EXISTING WALLS AND SURFACES WHEREVER IT IS NECESSARY TO PENETRATE. OPENINGS SHALL BE SEALED IN AN APPROVED METHOD TO MEET THE FIRE RATING OF THE PARTICULA WALL, FLOOR OR CEILING. THE EXACT METHOD AND LOCATIONS OF CONDUIT PENETRATIONS AND OPENINGS IN CONCRETE WALLS OR FLOORS SHALL BE U.L. APPROVED.
16. THE CONTRACTOR SHALL EXCAVATE ALL TRENCH DEPTHS AND WIDTHS PER THE C.E.C. AND SHALL COMPACT ALL EXCAVATIONS IN A CONTINUOUS LAYER OF NOT MORE THEN 6" COMPACTED DEPTH TO THE REQUIRED DENSITY OF NINETY PERCENT (90%). THE CONTRACTOR SHALL ATTAIN THE SPECIFIED COMPACTION DENSITY BY MAINTAINING THE OPTIMUM MOISTURE CONTENT OF THE FILL MATERIAL.
17. P.V.C. CONDUIT SHALL BE USED UNDERGROUND ONLY, IF APPROVED BY LOCAL CODE. INSTALL PER ALL REQUIRED LOCAL CODES. ALL CONDUIT SWEEPS, RISERS, AND STUBS ABOVE GRADE SHALL BE I.M.C. WITH HALF-LAPPED TAPE COVERING OR FACTORY INSTALLED P.V.C. COATING. ROUTE ALL UNDERGROUND CONDUITS AROUND PROPOSED BUILDING AND FUTURE BUILDING LOCATIONS.
18. ALL CONDUIT SHALL BE INSTALLED CONCEALED WHERE PHYSICALLY POSSIBLE.
19. CONCEALED CONDUIT SHALL BE ELECTRICAL METALLIC TUBING (E.M.T.) WITH COMPRESSION TYPE COUPLERS. SECURED WITH ONE-HOLE PIPE STRAPS.
20. ALL CONDUIT ONLY (C.O.) SHALL HAVE A 3/16" PULL WIRE OR ROPE, MINIMUM.
21. ALL CONDUIT SHOWN AS EXPOSED OR APPROVED FOR EXTERIOR EXPOSED INSTALLATION SHALL BE INTERMEDIATE METALLIC CONDUIT (I.M.C.). SECURED WITH TWO-HOLE MALLEABLE PIPE STRAPS AND SCREWS. ALL BOXES AND FITTINGS SHALL BE SUPPORTED AND SECURED IN COMPLIANCE WITH C.E.C. ARTICLE 370. IF VIEWED BY PUBLIC, APPLY TWO COATS OF PAINT TO MATCH SURFACE ATTACHED.
22. ALL CONDUIT SHOWN AS EXPOSED OR APPROVED FOR INTERIOR EXPOSED INSTALLATION, IN PUBLIC AREAS, SHALL BE WIREMOLD INSTALLED IN PARALLEL OR IN RIGHT ANGLES WITH ALL REQUIRED MOUNTING ACCESSORIES.
23. ALL PENETRATIONS TO FIRE-RATED MATERIALS SHALL BE RESTORED TO EQUAL RATING AS REQUIRED BY THE STATE FIRE MARSHAL AND ALL OTHER GOVERNING BODIES.
24. ALL CONDUCTORS OF EVERY SYSTEM SHALL BE PERMANENTLY TAGGED IN COMPLIANCE WITH O.S.H.A.
25. THE COMPLETE ELECTRICAL SYSTEM SHALL BE GROUNDED IN ACCORDANCE WITH THE PRESENTLY ADOPTED EDITION OF THE C.E.C., ARTICLE #250.
26. CONDUCTORS SHALL BE CODE GRADE, 600 VOLT CLASS, COPPER, MARKED 24" ALONG IT'S LENGTH SHOWING MANUFACTURER'S NAME, MAXIMUM ALLOWABLE VOLTAGE AND SIZE. CONDUCTORS SHALL BE TYPE "THWN" (WET) OR "THHN" (DRY). DELIVER CONDUCTORS TO THE JOB SITE IN UNBROKEN PACKAGES.
27. THE CONTRACTOR SHALL FURNISH AND INSTALL ALL CONDUIT, CONTROL WIRES, AND OUTLETS FOR COMPLETE CONNECTION TO MECHANICAL EQUIPMENT. REFER TO MECHANICAL DRAWINGS FOR CONTROL SCHEMATICS.
28. EXACT LOCATION OF ALL ELECTRICAL DEVICES AND EQUIPMENT SHALL BE COORDINATED WITH THE ARCHITECTURAL ELEVATIONS, DETAILS, OR SECTIONS PRIOR TO INSTALLATION. ALL ELECTRICAL DEVICES AND EQUIPMENT SHALL BE RECESSED IN WALLS UNLESS OTHERWISE NOTED.
29. THE CONTRACTOR SHALL REVIEW THE ARCHITECTURAL ELEVATIONS OF CASEWORK. OUTLETS MOUNTED ABOVE, BELOW, OR ADJACENT TO CASEWORK SHALL BE COORDINATED WITH THE ARCHITECTURAL DRAWINGS, PRIOR TO FINAL ROUGH-IN. ELECTRICAL DRAWINGS SHALL GOVERN NUMBER AND TYPE OF OUTLETS. PROVIDE CONDUIT, WIRES, AND OUTLETS FOR WORK REQUIRED IN CASEWORK INSTALLATIONS. THE CONTRACTOR SHALL BE RESPONSIBLE FOR CUT-OUTS IN TILE WHERE ELECTRICAL DEVICES OCCUR. PROVIDE BOX EXTENSIONS THROUGH ALL CASEWORK. FINISH FLUSH WITH FACE OF CABINET, ETC.
30. THE CONTRACTOR SHALL PROVIDE ALL LAMPS, HANGERS, CLIPS, SEISMIC SUPPORTS, LENSES, ETC. PER ALL REQUIRED CODES FOR A COMPLETE LIGHTING FIXTURE.
31. ARCHITECTURAL REFLECTED CEILING PLANS INDICATING THE LOCATION OF LIGHTING FIXTURES SHALL TAKE PRECEDENCE OVER THE LOCATIONS OF SAME AS SHOWN ON THE ELECTRICAL DRAWINGS. INSTALL THE LIGHTING FIXTURES IN ACCORDANCE WITH THE RELECTED CEILING PLANS. DISCREPANCIES SHALL BE BROUGHT TO THE ATTENTION OF THE ARCHITECT.
32. THE CONTRACTOR SHALL BE RESPONSIBLE FOR VERIFYING THE TYPE OF CEILING SYSTEMS AND TO FURNISH APPROVED LIGHTING FIXTURES OF THE TYPE REQUIRED FOR MOUNTING IN SUBJECT CEILING. WHERE FIXTURES ARE RECESSED IN PLASTER OR DRYWALL CEILINGS, THEY SHALL BE COMPLETE WITH NECESSARY MOUNTING HARDWARE AND PLASTER FRAMES.
33. RECESSED LIGHTING FIXTURES, SPEAKERS, RECEPTACLES, SWITCHES, ETC., MOUNTED IN FIRE RATED CEILINGS OR WALLS SHALL BE ENCLOSED WITH AN APPROVED ENCLOSURE CARRYING THE SAME FIRE RATING AS THE CEILING OR WALL.
34. LOW VOLTAGE ELECTRONIC SYSTEMS CONDUCTORS AND EQUIPMENT SHALL BE INSTALLED BY AN ELECTRONIC SYSTEMS CONTRACTOR WHO HOLDS A VALID C-10 LICENSE (FIRE ALARM) & C-7 LICENSE (COMMUNICATION AND VIDEO). EQUIPTMENT SHALL MATCH EXISTING AND SHALL BE INSTALLED IN ACCORDANCE WITH SPECIFICATIONS PROVIDED BY THE FACTORY AUTHORIZED DISTRIBUTOR OF THE EXISTING SYSTEM. NEW COMPONENTS INSTALLED SHALL BE COVERED BY FULL WRITTEN WARRANTY, FOR ALL PARTS AND INSTALLATION ON THE ENTIRE SYSTEM. CABLE SPLICES IN UNDERGROUND PULL BOXES ARE ABSOLUTELY PROHIBITED FOR SYSTEMS NOTED: FIRE ALARM, COMMUNICATION, AND INTRUSION ALARM AS SHOWN ON THE PLANS.
35. THESE DRAWINGS SHALL BE USED FOR BIDDING PURPOSES ONLY AND ARE NOT FOR CONSTRUCTION. THE CONTRACTOR SHALL SUBMIT FIRE ALARM SYSTEM SHOP DRAWINGS TO D.S.A. FOR APPROVAL PRIOR TO INSTALLATION. SYSTEM SHALL MEET THE REQUIREMENTS OF THE DRAWINGS AND SPECIFICATIONS.
36. WHERE A CONFLICT OCCURS BETWEEN THESE NOTES AND THE ELECTRICAL DRAWINGS ISSUED AS A PART OF THESE DOCUMENTS, THE MORE STRINGENT REQUIREMENT SHALL PREVAIL.
37. AT THE COMPLETION OF THE PROJECT, PROVIDE THE OWNER WITH ONE (1) SET OF COMPLETE, UP TO DATE, "AS-BUILT" REPRODUCIBLE DRAWINGS , SHOWING ACTUAL DEPTHS OF UNDERGROUND CONDUIT RUNS AT ALL LOCATIONS. ALL BROCHURES, OPERATING MANUALS, CATALOGS, SHOP DRAWINGS, ETC. SHALL BE TURNED OVER TO THE OWNER AT PROJECT COMPLETION.
38. AFTER DATE OF ACCEPTANCE BY OWNER, THE COMPLETED PROJECT SHALL BE GUARANTEED FOR A PERIOD OF ONE (1) YEAR. ANY WORK, MATERIAL OR EQUIPMENT FOUND TO BE FAULTY DURING THAT PERIOD SHALL BE CORRECTED IN A TIMELY MANNER, UPON WRITTEN NOTIFICATION, AT THE EXPENSE OF THE ELECTRICAL CONTRACTOR.
39. ENGRAVED PLASTIC NAMEPLATES SHALL BE PROVIDED FOR ALL SWITCHBOARDS, PANEL BOARDS, LOAD CENTERS, TRANSFORMERS, AND TERMINAL CABINETS. PLATES SHALL BE 3 PLY, BLACK FACE, WHITE CORE, WITH ¼" HIGH GOTHIC LETTERING.
40. MAIN UNDERGROUND PULL SECTION, METERING, MAIN DISCONNECT DEVICE, AND DISTRIBUTION SECTION(S) SHALL BE PROVIDED WITH RATINGS, COMPONENTS, AND FEATURES IN STRICT ACCORDANCE WITH THE SERVING UTILITIES AND CODE ENFORCING AGENCY, ELECTRICAL DRAWINGS AND SPECIFICATIONS. THE MAIN SWITCHBOARD AND DISTRIBUTION PANELS CONSIST OF A COMPLETELY ENCLOSED SELF-SUPPORTING, FLOOR STANDING STRUCTURE, OF THE REQUIRED NUMBER OF FORMED VERTICAL PANEL SECTIONS. PROVIDE BOLTED FRAMES AND INSULATING BLOCK TO SUPPORT THE MAIN HORIZONTAL BUS FOR SHORT CIRCUIT STRESS AS INDICATED ON THE DRAWINGS. ALL BUSSING SHALL BE 100% RATED MADE WITH COPPER HAVING A CURRENT DENSITY OF 1,000 AMPS PER SQUARE INCH, PROVIDED WITH SILVER PLATED BUS CONNECTIONS. PROVIDE A ¼ INCH THICK BY 2 INCH HIGH BY FULL LENGTH GROUND BUS WITHIN 12 INCHES OF NEUTRAL BUS AND CONNECT WITH A REMOVABLE LINK (CONNECTED IF SHOWN ON SINGLE LINE DIAGRAM). BOLT ALL FASTENING BETWEEN VERTICAL PANEL SECTIONS TO PROVIDE FLEXIBILITY DURING INSTALLATION. VENTILATED ENCLOSURE WITH NEMA 3R EXTERIOR ENCLOSURE IF REQUIRED, SHALL BE RUST PROOF PRIOR TO PAINTING 2 COATS OF GREY ENAMEL.
41. THE OWNER SHALL BE HANDED ONE SPARE SET OF EACH SIZE AND TYPE OF FUSE INSTALLED ON THIS PROJECT.

LIGHTING FIXTURE SCHEDULE

REFER TO DIVISION 1, GENERAL REQUIREMENTS, REGARDING PRODUCT OPTIONS AND SUBSTITUTION. WHERE THREE OR MORE MANUFACTURERS ARE LISTED IN THE FOLLOWING LIGHTING FIXTURE SCHEDULE, SUBSTITUTION WILL NOT BE CONSIDERED. WHERE PRODUCTS ARE LISTED BY NAMING ONE OR MORE MANUFACTURERS, WITHOUT "OR EQUAL" PROVISION FOR SUBSTITUTION, CONTRACTOR SHALL INCLUDE ONLY SPECIFIED PRODUCTS IN BID. REQUEST FOR SUBSTITUTION WITHIN 35 DAYS FROM THE DATE OF THE NOTICE TO PROCEED WILL ONLY BE CONSIDERED IN ACCORDANCE WITH DIVISION 1 OF THESE CONTRACT DOCUMENTS.

	DESCRIPTION	LAMPS [2]			VOLTS	MOUNTING
		NO.	WATTS	TYPE		
1A / 177	(2) 2' x 4' STATIC TROFFER, TANDUM WIRED WITH .125 THICK PRISMATIC ACRYLIC LENS. (1) 4-LAMP & (1) 2-LAMP ELECTRONIC BALLASTS. LITHONIA-SP SERIES	6	32	F032 T8 SPX35	120	RECESSED IN T-BAR GRID CEILING
1AE / 177	SAME AS "1A" EXCEPT [1] LITHONIA-SP SERIES	6	32	F032 T8 SPX35	120	RECESSED IN T-BAR GRID CEILING
2A / 95	2'x4' STATIC TROFFER, PRISMATIC ACRYLIC LENS AND (1) 2-LAMP AND (1) 1-LAMP ELECTRONIC BALLASTS. LITHONIA-SP SERIES	3	32	F032 T8 SPX35	120	RECESSED IN T-BAR GRID CEILING
3A / 65	2'x4' STATIC TROFFER, PRISMATIC ACRYLIC LENS AND (1) 2-LAMP ELECTRONIC BALLAST. LITHONIA-SP SERIES	2	32	F032 T8 SPX35	120	RECESSED IN T-BAR GRID CEILING
3AE / 65	SAME AS "3A" EXCEPT [1] LITHONIA-SP SERIES	2	32	F032 T8 SPX35	120	RECESSED IN T-BAR GRID CEILING
1B / 65	1'x4' SOLID BODY FLUORESCENT FIXTURE WITH PRISMATIC ACRYLIC LENS AND (1) 2-LAMP ELECTRONIC BALLAST. LITHONIA-M SERIES	2	32	F032 T8 SPX35	120	SURFACE TO CEILING
1C / 35	8" DIA. RECESSED FLUORESCENT DOWNLIGHT WITH SEMI-DIFFUSE LOW IRIDESCENT FINISH AND ELECTRONIC BALLAST. LITHONIA-AFV	1	32	TRIPLE TUBE SPX35	120	RECESSED IN CEILING
1CE / 35	SAME AS "1C" EXCEPT [1] LITHONIA-AFV	1	32	TRIPLE TUBE SPX35	120	RECESSED IN CEILING
1S / 80	AREA HID SECURITY FIXTURE W/CONCEALED LAMP. LITHONIA-TWAC	1	70	METAL HALIDE	120	WALL @ 9'-0" A.F.G. [3]
1X / 5	SINGLE FACE L.E.D. EXIT SIGN WITH 90 MIN. BATTERY BACKUP. LITHONIA-SIGNATURE	COMPLETE			120	CANOPY TO CEILING

[1] PROVIDE 90 MINUTE EMERGENCY BATTERY PACK 1100 LUMENS MINIMUM.
[2] LAMP CODES AND SPECIFICATIONS BASED ON GE LAMPS.
[3] VERIFY EXACT MOUNTING HEIGHT AND LOCATION WITH ARCHITECT PRIOR TO ROUGH-IN.

ELECTRICAL SYMBOLS LIST

- DISTRIBUTION SWITCHBOARD REFER TO SINGLE LINE DIAGRAM.
- DATA/TELEPHONE OUTLET BOX + 15" A.F.F. WITH (1) 3/4"C.O. TO ACCESSIBLE CEILING SPACE
- COMMUNICATION OUTLET BOX + 48" A.F.F. WITH (1) 3/4"C.O. TO ACCESSIBLE CEILING SPACE
- CONDUIT INSTALLED EXPOSED
- CONDUIT INSTALLED UNDERGROUND 3/4" UNLESS NOTED OTHERWISE
- CONDUIT INSTALLED CONCEALED IN WALLS, FLOOR OR ABOVE CEILING
- CO — 3/4" CONDUIT ONLY, WITH 3/16" PULL ROPE.
- CONDUIT ONLY STUB OUT, CAP & MARK.
- SURFACE MOUNTED ELECTRICAL PANELBOARD OR LOAD CENTER. REFER TO PANEL SCHEDULE.
- JUNCTION BOX, MOUNTED IN ACCESSIBLE LOCATION.
- RECESS MOUNTED CEILING LIGHT FIXTURE – REFER TO FIXTURE SCHEDULE.
- SHADED AREA INDICATES THAT THE LIGHT FIXTURE IS ON AN EMERGENCY SYSTEM, BATTERY, OR IS A NIGHT LIGHT FIXTURE.
- EXIT SIGN, CEILING MOUNTED, SHADING INDICATES DIRECTION AND NUMBER OF FACES.
- DUPLEX RECEPTACLE, WALL MOUNTED ℄ + 15" A.F.F. OR AS NOTED.
- QUADPLEX RECEPTACLE, WALL MOUNTED ℄ + 15" A.F.F. OR AS NOTED.
- JUNCTION BOX, WALL MOUNTED. FIELD VERIFY MOUNTING HEIGHT PRIOR TO ROUGH-IN.
- EXHAUST FAN, OR MOTOR LOAD. REFER TO MECHANICAL DRAWINGS FOR SPECIFIC LOAD REQUIREMENTS OR AS NOTED. NUMBER INDICATES HORSEPOWER.
- FUSED DISCONNECT SWITCH – HP RATED WITH FUSES PER EQUIPMENT MANUFACTURER AND SINGLE LINE DIAGRAM.
- GROUND CONNECTION, SIZE AS INDICATED OR AS REQUIRED.
- 3 / E-1 — DETAIL CALLOUT, "3" INDICATES DETAIL NUMBER "E-1" INDICATES SHEET NUMBER.
- AC / 1 — EQUIPMENT CALLOUT, "AC" INDICATES EQUIPMENT TYPE NUMBER "1" INDICATES WHICH PIECE OF EQUIPMENT
- (1) PLAN NOTE REFERENCE.
- WP — WEATHERPROOF, NEMA 3R
- PROVIDE — FURNISH, INSTALLED AND CONNECTED, COMPLETE.
- C — CONDUIT
- E/G — EQUIPMENT GROUND (GREEN)
- (E) — EXISTING TO REMAIN
- (R&R) — REMOVE AND RELOCATE
- P.O.E. — POINT OF EXTENSION
- E.O.L. — END OF LINE RESISTOR
- A.F.F. — ABOVE FINISHED FLOOR
- A.F.G. — ABOVE FINISHED GRADE
- U.N.O. — UNLESS NOTED OTHERWISE
- $_{a,b}$ — SINGLE POLE WALL SWITCH, +48" A.F.F., SUBSCRIPTS AT SYMBOL INDICATE THE FOLLOWING.
  3 – THREE WAY M – MOTOR STARTING SWITCH
  a,b,c, ETC.–IDENTIFICATION OF OUTLETS CONTROLLED AND NUMBER OF SWITCHES AT LOCATION.

SPECIAL NOTE:

LOCATIONS OF EXISTING SYSTEMS ARE APPROXIMATE AND THE CONTRACTOR SHALL USE EXTREME CAUTION IN EXCAVATING AND TRENCHING ON THIS SITE TO PREVENT HAZARD TO PERSONNEL AND / OR DAMAGE TO EXISTING UNDERGROUND UTILITIES AND STRUCTURES WHETHER OR NOT SHOWN AND INSTALLED BY ANY OTHER CONTACTS. THE OWNER, ARCHITECT OR ENGINEER IS NOT RESPONSIBLE FOR THE LOCATION OF UNDERGROUND UTILITIES OR STRUCTURES. IF ANY UNIDENTIFIED CONDITION IS DISCOVERED. THE CONTRACTOR SHALL IMMEDIATELY NOTIFY THE ENGINEER. THE CONTRACTOR SHALL BE RESPONSIBLE FOR THE PROPER AND APPROVED REPAIR OF ANY AND ALL DAMAGES CAUSED BY HIM OR HIS WORK. THE CONTRACTOR SHALL BE RESPONSIBLE FOR ALL SAW CUTTING, TRENCHING, BACKFILLING, COMPACTION, AND PATCHING OF CONCRETE AND ASPHALT AS REQUIRED TO PERFORM HIS WORK.

SYSTEM GROUND — SCALE N.T.S. (2)

LOAD SUMMARY:

PANEL A	=	33.3 KVA
PANEL B	=	30.7 KVA
PANEL C	=	28.1 KVA
PANEL D	=	30.4 KVA
PANEL E	=	27.6 KVA
PANEL F	=	26.3 KVA
PANEL G	=	30.8 KVA
PANEL H	=	34.4 KVA
PANEL J	=	31.5 KVA
PANEL K	=	30.6 KVA
WH-1	=	6.0 KVA
		309.7 KVA
		861.0 AMPS

REGISTERED PROFESSIONAL ENGINEER JACK T. TAMAI No. E6122 Exp. 9/30/06 ELECTRICAL STATE OF CALIFORNIA

SINGLE LINE DIAGRAM — SCALE N.T.S. (1)

ARCHITECT: LICENSED ARCHITECT DAVID HIGGINSON NO.C19168 REN.10-31-08 STATE OF CALIFORNIA

higginson + cartozian architects, inc.
architecture ◆ planning ◆ design
David Higginson, Architect
127 East State Street
Redlands, California 92373
ph. (909) 793-3100 fax (909) 793-3140

CONSULTANT: JCA Engineering Inc. Electrical Engineering & Consulting
7939 Palm Ave Highland, Ca. 92346
909 864-0223 Fax 909 864-0280 jcaeng@earthlink.net
Job # 03-673 P.M. James Corns

REVISIONS
DATE:
DATE:

Arlanza Neighborhoods Initiative Project
Arlanza Youth & Family Resource Center
City of Riverside

SHEET TITLE: SYMBOL LIST, GENERAL NOTES, SINGLE LINE DIAGRAM AND FIXTURE SCHEDULE

DRAWN BY: SCC
CHECKED BY: JJC
DATE: NOV. 3,2003
SHEET NO: E-0.1

70421 / TS00-02

\\Adam\c\JCA Engineering Inc\03-673\673_e01.dwg Wed Dec 03 08:29:32 2003 JCA Engineering, Inc.

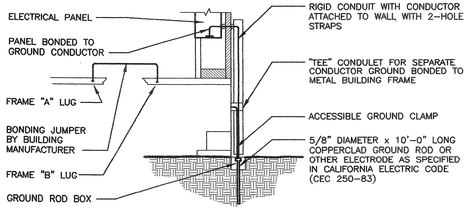

NOTES:

1 SIZE OF CONDUCTORS SHALL COMPLY WITH C.E.C. TABLE 250-95.

2 BOND SEPARATE CONDUCTORS FROM GROUND ROD TO ELECTRICAL PANEL AND FROM GROUNDING ROD TO METAL BUILDING FRAME (C.E.C. 250-81). IN ADDITION TO THE DETAIL SHOWN ABOVE, BOND THE ELECTRICAL GROUND TO METAL WATER PIPE EMBEDDED AT LEAST 10 FT. INTO THE SOIL IF AVAILABLE (C.E.C. 250-81 & 250-83)

3 ALL MODULES OF METAL FRAME BUILDINGS SHALL BE ELECTRICALLY BONDED TOGETHER (BOLTING ONLY IS NOT ACCEPTABLE BONDING).

4 CHECK RESISTANCE TO GROUND. IF RESISTANCE EXCEEDS 25 OHMS INSTALL ADDITIONAL GROUND RODS WITH CONDUCTORS SHOWN, WITH #2 AWG BARE COPPER GROUND RING, SEPARATED AT LEAST 10'-0" UNITL RESISTANCE IN REDUCED TO 25 OHMS OR LESS (C.E.C. 250-84). CONTRACTOR MUST DEMONSTRATE TO OWNER OR OSA INSPECTOR THAT RESISTANCE IN 25 OMS OR LESS.

PANEL GROUNDING

SCALE NTS (3)

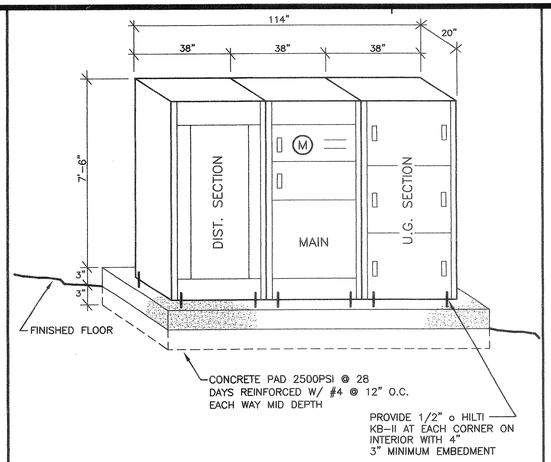

NOTES:

1. PROVIDE 3" DEEP CONCRETE AROUND BASE OF SWITCHBOARD.
2. THE DIMENSIONS USED ARE BASED UPON RSE-SIERRA MANUFACTURES PRODUCTS. IF ANOTHER MANUFACTURES PRODUCT IS FURNISHED, THE CONTRACTOR SHALL INSURE THAT THE PRODUCT WILL FIT WITHIN THE SPACE PROVIDED.

SERVICE ELEVATION

SCALE NTS (2)

SITE PLAN NOTES:

1. ( ) 4"C.O. TO TELEPHONE COMPANY PICK UP POINT INSTALL PER TELEPHONE COMANY REQUIREMENTS VERIFY PRIOR TO ROUGH-IN AND INCLUDE ALL COST IN BID.
2. SEE SINGLE LINE DIAGRAM
3. ( ) 4"C.O. TO SCE PICK UP POINT. INSTALL PER SCE REQUIREMENTS VERIFY PRIOR TO ROUGH-IN AND INCLUDE ALL COST IN BID.
4. PROVIDE 10'x 12' SLAB BOX INSTALLED PER SCE REQUIREMENTS VERIFY PRIOR TO ROUGH-IN AND INCLUDE ALL COST IN BID.
5. ( ) 4"C.O. INSTALLED PER SCE REQUIREMENTS VERIFY PRIOR TO ROUGH-IN AND INCLUDE ALL COST IN BID.
6. INSTALL NEW PULL BOX PER S.C.E. REQUIREMENTS. VERIFY PRIOR TO ROUGH-IN AND INCLUDE ALL COST IN BID.
7. INSTALL NEW PULL BOX PER TELEPHONE COMPANY REQUIREMENTS VERIFY PRIOR TO ROUGH-IN AND INCLUDE ALL COST IN BID.
8. INSTALL NEW PULL BOX PER CABLE COMPANY REQUIREMENTS VERIFY PRIOR TO ROUGH-IN AND INCLUDE ALL COST IN BID.
9. ( ) 4"C.O. INSTALLED PER CABLE COMPANY REQUIREMENTS VERIFY PRIOR TO ROUGH-IN AND INCLUDE ALL COST IN BID.
10. EXISTING S.C.E. PULL BOX VERIFY PRIOR TO ROUGH-IN

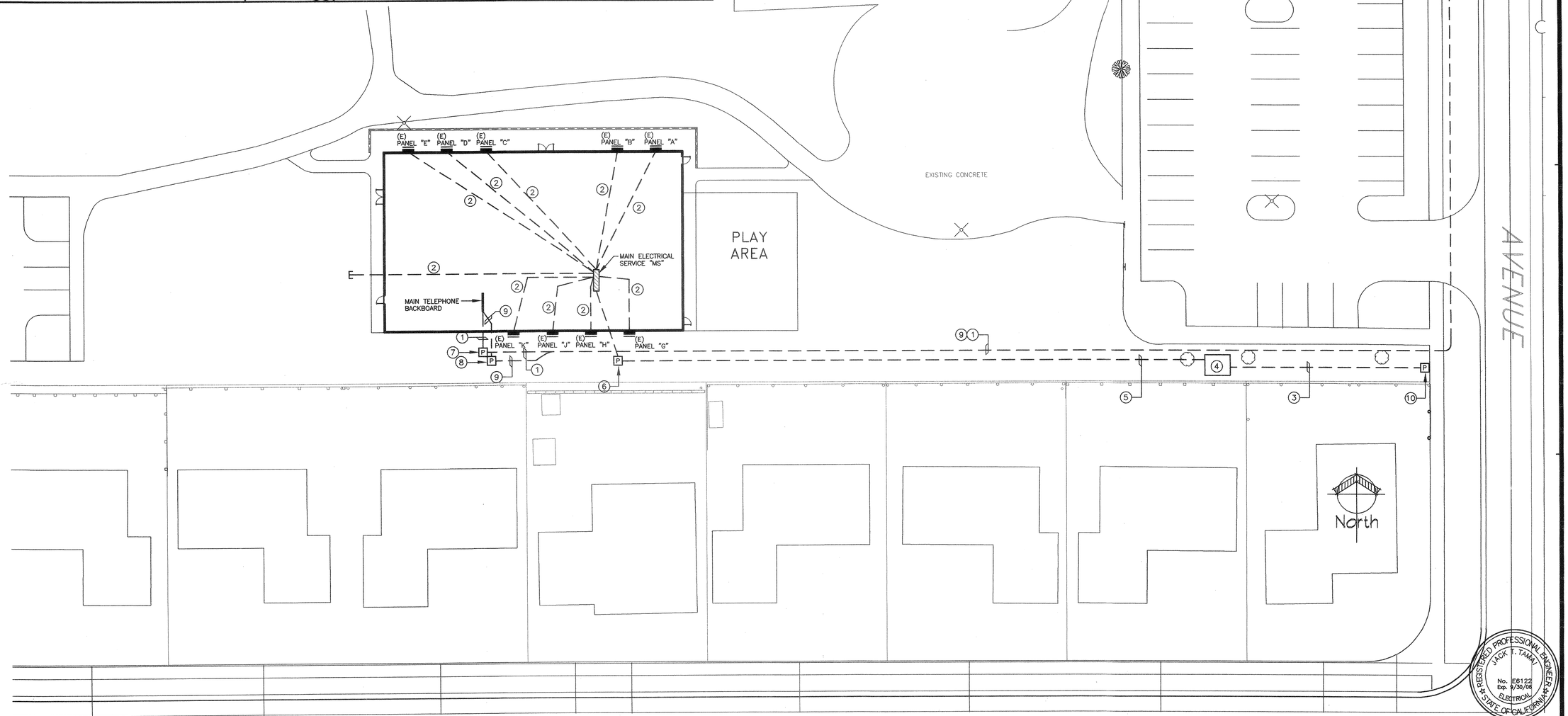

ELECTRICAL SITE PLAN

SCALE 1" = 20'-0" (1)

REGISTERED PROFESSIONAL ENGINEER JACK T. TAMAI No. E6122 Exp. 9/30/08 ELECTRICAL STATE OF CALIFORNIA

ARCHITECT: LICENSED ARCHITECT DAVID HIGGINSON NO.C19168 RENEWAL 08/31/08 STATE OF CALIFORNIA

1	REVISIONS
2	DATE:
3	DATE:

higginson + cartozian architects, inc.
architecture ◆ planning ◆ design
David Higginson, Architect
127 East State Street
Redlands, California 92373
ph. (909) 793-3100 fax (909) 793-3140

CONSULTANT:

JCA Engineering, Inc.
Electrical Engineering & Consulting
7939 Palm Ave
Highland, Ca. 92346
909 864-0223
Fax 864-0224
jcaengineering@att.net
JOB # 03-673
P.M.: James Correa

Arlanza Neighborhoods Initiative Project

Arlanza Youth & Family Resource Center
City of Riverside

SHEET TITLE: POWER PLAN AND LIGHTING PLAN

DRAWN BY: SCC

CHECKED BY: JJC

DATE: NOV. 3,2003

SHEET NO:

E-1.0

70421 / TS00-02

\\Adam\c\JCA Engineering Inc\03-673\673_e10.dwg Wed Dec 03 08:31:48 2003 JCA Engineering, Inc.

EXISTING

PANEL A (A) — LOCATION: EXTERIOR ROOM 106 — MAIN: MLO — BUS RATING 200 AMP — 120/208V–1ø,3W — MOUNTING: SURFACE

LOCATION	øA	øB	CIR	BKR	BKR	CIR	øA	øB	LOCATION
LTG. ROOM 101–105	1033		1	20	100/2	2	9360		EXIST HVAC
LTG. ROOM 135–137		898	3	20		4		9360	---
–	–		5	20	20	6	1422		LTG. ROOM 106
–		–	7	20	20	8		1516	LTG ROOM 107
–	–		9	20	30/2	10	2300		WH–2 (B)
–		–	11	–		12		2300	------
–	–		13	–	–	14	–		–
–		–	15	–	–	16		–	–
–	–		17	–	–	18	–		–
	1033	898	SUB TOTALS				13082	13176	

TOTAL CONNECTED VA	= 28189 VA
LCL: 20651 VA @ 25%	= 5163 VA
TOTAL PANEL LOAD	= 33352 VA
FEEDER AMPS	= 160.4 AMPS

NOTES:
(A) ALL CIRCUIT BREAKERS SHOWN ON THIS PANEL SCEDULE ARE EXISTING UNLESS NOTED OTHERWISE
(B) PROVIDE NEW CIRCUIT BREAKER MATCH EXISTING MANUFACTURER AND OPERATING CHARACTERISTICS

EXISTING

PANEL B (A) — LOCATION: EXTERIOR ROOM 106 — MAIN: MLO — BUS RATING 200 AMP — 120/208V–1ø,3W — MOUNTING: SURFACE

LOCATION	øA	øB	CIR	BKR	BKR	CIR	øA	øB	LOCATION
GEN RECEPTS	900		1	20	100/2	2	9360		EXIST HVAC
GEN RECEPTS		900	3	20		4		9360	---
GEN RECEPTS	1080		5	20	20	6	800		COUNTER RECEPTS
GEN RECEPTS		1080	7	20	20	8		800	COUNTER RECEPTS
GEN RECEPTS	900		9	20	–	10	–		–
(B) GEN RECEPTS		900	11	20	–	12		–	–
–	–		13	–	–	14	–		–
–		–	15	–	–	16		–	–
–	–		17	–	–	18	–		–
	2880	2880	SUB TOTALS				10160	10160	

TOTAL CONNECTED VA	= 26080 VA
LCL: 18720 VA @ 25%	= 4680 VA
TOTAL PANEL LOAD	= 30760 VA
FEEDER AMPS	= 148 AMPS

NOTES:
(A) ALL CIRCUIT BREAKERS SHOWN ON THIS PANEL SCEDULE ARE EXISTING UNLESS NOTED OTHERWISE
(B) PROVIDE NEW CIRCUIT BREAKER MATCH EXISTING MANUFACTURER AND OPERATING CHARACTERISTICS

EXISTING

PANEL C (A) — LOCATION: EXTERIOR ROOM 136 — MAIN: MLO — BUS RATING 200 AMP — 120/208V–1ø,3W — MOUNTING: SURFACE

LOCATION	øA	øB	CIR	BKR	BKR	CIR	øA	øB	LOCATION
LTG. RM 128–131 & 134	1068		1	20	100/2	2	9360		EXIST HVAC
LTG. ROOM 132		525	3	20		4		9360	---
LTG. ROOM 125	762		5	20	20	6	–		–
LTG. 122–124/126/127		1434	7	20	20	8		–	–
–	–		9	–	–	10	–		–
–		–	11	–	–	12		–	–
–	–		13	–	–	14	–		–
–		–	15	–	–	16		–	–
–	–		17	–	–	18	–		–
	1830	1959	SUB TOTALS				9360	9360	

TOTAL CONNECTED VA	= 22509 VA
LCL: 22509 VA @ 25%	= 5627 VA
TOTAL PANEL LOAD	= 28136 VA
FEEDER AMPS	= 135.3 AMPS

NOTES:
(A) ALL CIRCUIT BREAKERS SHOWN ON THIS PANEL SCEDULE ARE EXISTING UNLESS NOTED OTHERWISE
*
*

EXISTING

PANEL D (A) — LOCATION: EXTERIOR ROOM 134 — MAIN: MLO — BUS RATING 200 AMP — 120/208V–1ø,3W — MOUNTING: SURFACE

LOCATION	øA	øB	CIR	BKR	BKR	CIR	øA	øB	LOCATION
GEN RECEPTS 130	720		1	20	100/2	2	9360		EXIST HVAC
GEN RECEPTS 129		720	3	20		4		9360	---
GEN RECEPTS 134	720		5	20	20	6	900		GEN RECEPTS 137
GEN RECEPTS 131		900	7	20	20	8		1080	GEN RECEPTS 136
–	–		9	–	20	10	900		GEN RECEPTS 136/137 (B)
–		–	11	–	20	12		1080	GEN RECEPTS 135 (B)
–	–		13	–	–	14	–		–
–		–	15	–	–	16		–	–
–	–		17	–	–	18	–		–
	1440	1620	SUB TOTALS				11160	11520	

TOTAL CONNECTED VA	= 25740 VA
LCL: 18720 VA @ 25%	= 4680 VA
TOTAL PANEL LOAD	= 30420 VA
FEEDER AMPS	= 146.3 AMPS

NOTES:
(A) ALL CIRCUIT BREAKERS SHOWN ON THIS PANEL SCEDULE ARE EXISTING UNLESS NOTED OTHERWISE
(B) PROVIDE NEW CIRCUIT BREAKER MATCH EXISTING MANUFACTURER AND OPERATING CHARACTERISTICS

EXISTING

PANEL E (A) — LOCATION: EXTERIOR ROOM 134 — MAIN: MLO — BUS RATING 200 AMP — 120/208V–1ø,3W — MOUNTING: SURFACE

LOCATION	øA	øB	CIR	BKR	BKR	CIR	øA	øB	LOCATION
GEN RECEPTS 134	900		1	20	100/2	2	9360		EXIST HVAC
GEN RECEPTS 132		900	3	20		4		9360	---
COPIER	1200		5	20/2	–	6	–		–
-------		1200	7		–	8		–	–
–	–		9	–	–	10	–		–
–		–	11	–	–	12		–	–
–	–		13	–	–	14	–		–
–		–	15	–	–	16		–	–
–	–		17	–	–	18	–		–
	2100	2100	SUB TOTALS				9636	9636	

TOTAL CONNECTED VA	= 22920 VA
LCL: 18720 VA @ 25%	= 4680 VA
TOTAL PANEL LOAD	= 27600 VA
FEEDER AMPS	= 132.8 AMPS

NOTES:
(A) ALL CIRCUIT BREAKERS SHOWN ON THIS PANEL SCEDULE ARE EXISTING UNLESS NOTED OTHERWISE
*
*

EXISTING

PANEL F (A) — LOCATION: EXTERIOR ROOM 132 — MAIN: MLO — BUS RATING 200 AMP — 120/208V–1ø,3W — MOUNTING: SURFACE

LOCATION	øA	øB	CIR	BKR	BKR	CIR	øA	øB	LOCATION
GEN RECEPTS 128	720		1	20	100/2	2	9360		EXIST HVAC
GEN RECEPTS 127		720	3	20		4		9360	---
↓	800		5	20	–	6	–		–
		720	7	20	–	8		–	–
–	–		9	–	–	10	–		–
–		–	11	–	–	12		–	–
–	–		13	–	–	14	–		–
–		–	15	–	–	16		–	–
–	–		17	–	–	18	–		–
	1520	1440	SUB TOTALS				9360	9360	

TOTAL CONNECTED VA	= 21680 VA
LCL: 18720 VA @ 25%	= 4680 VA
TOTAL PANEL LOAD	= 26360 VA
FEEDER AMPS	= 126.8 AMPS

NOTES:
(A) ALL CIRCUIT BREAKERS SHOWN ON THIS PANEL SCEDULE ARE EXISTING UNLESS NOTED OTHERWISE
*
*

PLAN NOTES:

1. MOUNT +6" ABOVE COUNTER OR SPLASH
2. PROVIDE GFI TYPE RECEPTACLE
3. MOUNT IN CASEWORK AS DIRECTED BY ARCHITECT
4. GROUNDING BUSBAR MUST BE A COPPER, 8MM THICK BY 100MM WIDE BY 10CM LONG, PRE-DRILLED BUSBAR CHATSWORTH PART #40153–012. THE BUSBAR SHALL BE INSULATED FROM ITS SUPPORTING STRUCTURE BY AT LEAST TWO INCHES OF SEPERATION. BOND THE BUSBAR TO THE BUILDING AC GROUNDING ELECTRODE SYSTEM. THE MINIMUM SIZE OF THE BONDING CONDUCTOR SHOULD BE #8 AWG AND BE SIZED TO CARRY THE MAXIMUM SHORT TIME RATING AMPS OF THE BUILDING GROUNDING ELECTRODE CONDUCTOR. A SUPPLEMENTAL BONDING CONNECTION IS REQUIRED TO THE STRUCTURAL STEEL OF THE BUILDING. RESISTANCE SHOULD BE NO MORE THAN .1 OHMS BETWEEN THE TMGB AND THE BUILDING MAIN GROUNDING SOURCE MEASURED FOLLOWING THE TWO-POINT BONDING TEST METHOD USING AN EARTH GROUND RESISTANCE TESTER.
5. 3/4"C. 3 #12 & 1 #12 E/G.
6. SEE SINGLE LINE DIAGRAM.

ELECTRICAL POWER PLAN

SCALE 1/8" = 1'–0" (1)

ELECTRICAL LIGHTING PLAN

SCALE 1/8" = 1'–0" (2)

ARCHITECT: LICENSED ARCHITECT DAVID HIGGINSON NO.C19168 REN.10-31-08 STATE OF CALIFORNIA

REVISIONS
DATE:
DATE:

higginson + cartozian architects, inc.
architecture ◆ planning ◆ design
David Higginson, Architect
127 East State Street
Redlands, California 92373
ph. (909) 793-3100 fax (909) 793-3140

CONSULTANT: JCA Engineering Inc.
Electrical Engineering & Consulting
7939 Palm Ave
Highland, Ca. 92346
909 864-0223
Fax 909 864-0280
jcaeng@earthlink.net
Job # 03-673
P.M. James Corns

Arlanza Neighborhoods Initiative Project
Arlanza Youth & Family Resource Center
City of Riverside

SHEET TITLE: POWER PLAN AND LIGHTING PLAN

DRAWN BY: SCC
CHECKED BY: JJC
DATE: NOV. 3,2003
SHEET NO: **E–2.0**

70421 / TS00–02

\\Adam\c\JCA Engineering Inc\03-673\673_e20.dwg Wed Dec 03 08:43:07 2003 JCA Engineering, Inc.

EXISTING

PANEL **G** (A) — LOCATION: EXTERIOR ROOM 112 — MAIN: MLO — BUS RATING 200 AMP — 120/208V–1ø,3W — MOUNTING: SURFACE

LOCATION	VOLTAMPS øA	VOLTAMPS øB	CIR	BKR	A B	BKR	CIR	VOLTAMPS øA	VOLTAMPS øB	LOCATION
DEDICATED RECEPT.	900		1	20		100/2	2	9360		EXIST HVAC
FACP		500	3	20			4		9360	---
GEN RECEPTS	1080		5	20		20	6	720		GEN RECEPTS
DRINKING FOUNTAIN		1000	7	20		20	8		900	GEN RECEPTS
DRINKING FOUNTAIN	1000		9	20		–	10	–		–
(B) GEN RECEPTS		1260	11	20		–	12		–	–
–	–		13	–		–	14	–		–
–		–	15	–		–	16		–	–
–	–		17	–		–	18	–		–
	2980	2760	SUB TOTALS					10080	10260	

TOTAL CONNECTED VA	= 26080 VA
LCL: 19220 VA @ 25%	= 4805 VA
TOTAL PANEL LOAD	= 30885 VA
FEEDER AMPS	= 148.6 AMPS

NOTES:
(A) ALL CIRCUIT BREAKERS SHOWN ON THIS PANEL SCEDULE ARE EXISTING UNLESS NOTED OTHERWISE
(B) PROVIDE NEW CIRCUIT BREAKER MATCH EXISTING MANUFACTURER AND OPERATING CHARACTERISTICS

EXISTING

PANEL **H** (A) — LOCATION: EXTERIOR ROOM 112 — MAIN: MLO — BUS RATING 200 AMP — 120/208V–1ø,3W — MOUNTING: SURFACE

LOCATION	VOLTAMPS øA	VOLTAMPS øB	CIR	BKR	A B	BKR	CIR	VOLTAMPS øA	VOLTAMPS øB	LOCATION
LTG. ROOM 111 & 112	1015		1	20		100/2	2	9360		EXIST HVAC
LTG. 108–110/113–115		1080	3	20			4		9360	---
EXTERIOR LIGHTING	1360		5	20		20	6	1422		LTG. ROOM 117–121
TIME SWITCH		300	7	20		20	8		–	–
WH–2	2300		9	30/2		–	10	–		–
------		2300	11			–	12		–	–
–	–		13	–		–	14	–		–
–		–	15	–		–	16		–	–
–	–		17	–		–	18	–		–
	4675	3680	SUB TOTALS					10782	9360	

TOTAL CONNECTED VA	= 28497 VA
LCL: 23897 VA @ 25%	= 5974 VA
TOTAL PANEL LOAD	= 34471 VA
FEEDER AMPS	= 165.8 AMPS

NOTES:
(A) ALL CIRCUIT BREAKERS SHOWN ON THIS PANEL SCEDULE ARE EXISTING UNLESS NOTED OTHERWISE
(B) PROVID E24–HOUR, 7–DAY ELECTRONIC TIME SWITCH 120V. MOUNT IN LOCKABLE NEMA 3R CABINET BELOW PANEL.
(C) CONNECT TO TIMESWITCH IN PANEL.

EXISTING

PANEL **J** (A) — LOCATION: EXTERIOR ROOM 112 — MAIN: MLO — BUS RATING 200 AMP — 120/208V–1ø,3W — MOUNTING: SURFACE

LOCATION	VOLTAMPS øA	VOLTAMPS øB	CIR	BKR	A B	BKR	CIR	VOLTAMPS øA	VOLTAMPS øB	LOCATION
GEN RECEPTS 112	720		1	20		100/2	2	9360		EXIST HVAC
GEN RECEPTS 121		720	3	20			4		9360	---
MICRO	1000		5	20		20	6	1080		CUBICLE
REFRIG.		1200	7	20		20	8		1080	CUBICLE
–	–		9	–		20	10	1080		CUBICLE
–		–	11	–		20	12		1080	CUBICLE (B)
–	–		13	–		–	14	–		–
–		–	15	–		–	16		–	–
–	–		17	–		–	18	–		–
	1920	1920	SUB TOTALS					11520	11520	

TOTAL CONNECTED VA	= 26880 VA
LCL: 18720 VA @ 25%	= 4680 VA
TOTAL PANEL LOAD	= 31560 VA
FEEDER AMPS	= 151.8 AMPS

NOTES:
(A) ALL CIRCUIT BREAKERS SHOWN ON THIS PANEL SCEDULE ARE EXISTING UNLESS NOTED OTHERWISE
(B) PROVIDE NEW CIRCUIT BREAKER MATCH EXISTING MANUFACTURER AND OPERATING CHARACTERISTICS

EXISTING

PANEL **K** (A) — LOCATION: EXTERIOR ROOM 112 — MAIN: MLO — BUS RATING 200 AMP — 120/208V–1ø,3W — MOUNTING: SURFACE

LOCATION	VOLTAMPS øA	VOLTAMPS øB	CIR	BKR	A B	BKR	CIR	VOLTAMPS øA	VOLTAMPS øB	LOCATION
COMPUTER	1200		1	20		100/2	2	9360		EXIST HVAC
COMPUTER		1200	3	20			4		9360	---
COMPUTER	1200		5	20		20	6	–		COMPUTER
COMPUTER		1200	7	20		20	8		–	COMPUTER
–	–		9	–		–	10	–		–
–		–	11	–		–	12		–	–
–	–		13	–		–	14	–		–
–		–	15	–		–	16		–	–
–	–		17	–		–	18	–		–
	2400	2400	SUB TOTALS					10560	10560	

TOTAL CONNECTED VA	= 25920 VA
LCL: 18720 VA @ 25%	= 4680 VA
TOTAL PANEL LOAD	= 30600 VA
FEEDER AMPS	= 147.2 AMPS

NOTES:
(A) ALL CIRCUIT BREAKERS SHOWN ON THIS PANEL SCEDULE ARE EXISTING UNLESS NOTED OTHERWISE
*
*

FIRE ALARM NOTE:

1. NEW FIRE ALARM CONTROL PANEL, "FACP". REFER TO FIRE ALARM RISER DIAGRAM FOR ALL NEW DEVICES, ZONE ALTERATIONS, CONDUIT AND CONDUCTOR REQUIREMENTS.
2. 3/4"C., 4 #12 THWN
3. 3/4"C., (1) #16 TWISTED SHIELDED PAIR & 4 #12 THWN
4. PROVIDE ADDRESSIBLE MONITOR MODULE AT DEVICE
5. 3/4"C., (1) #16 TWISTED SHIELDED PAIR & 8 #12 THWN
6. 3/4"C., 2 #12 THWN
7. 3/4"C., (1) #16 TWISTED SHIELDED PAIR
8. 3/4"C. (1) #16 TWISTED SHIELDED PAIR & 4 #14 THWN.
9. 3/4"C. (2) #16 TWISTED SHIELDED PAIR, 4 #12 & 4 #14 THWN.
10. 3/4"C. 8 #12 THWN.
11. 1"C. (2) #16 TWISTED SHIELDED PAIR , 8 #12 & 4 #14 THWN.

LOW VOLTAGE PLAN NOTES:

1. MOUNT IN CASEWORK AS DIRECTED BY ARCHITECT.
2. PROVIDE 3/4" AC–GRADE PLYWOOD 9' HIGH. WRAP COMPLETE ROOM. PAINT ALL SIDES OF PLYWOOD W/TWO COATS OF FIRE RESISTANT PAINT AND SECURE TO WALL.
3. PROVIDE 4"C.O. SLEEVE +6" BELOW CEILING LINE, BUSH ENDED.COORDINATE WITH OWNER'S REPRESENTATIVE PRIOR TO ROUGH IN.
4. (1) 1 1/2"C.O. & (1) 1"C.O. TO DATA ROOM 122. VERIFY LOCATION PRIOR TO ROUGH–IN.

FIRE ALARM/LOW VOLTAGE PLAN

SCALE 1/8" = 1'–0" (1)

FIRE ALARM GENERAL NOTES:

1. NEW SYSTEM IS AN ADDRESSIBLE, MANUALLY ACTIVATED POWER LIMITED 24V DC SUPERVISED FIRE ALARM SYSTEM AS SHOWN, IN COMPLIANCE WITH CALIFORNIA BUILDING CODE SECTION 305.9, THE 2001 CALIFORNIA ELECTRICAL CODE, 1999 NFPA 72 AND 2001 CALIFORNIA FIRE CODE.
2. FIRE ALARM CABLE SPLICES IN UNDERGROUND PULL BOXES ARE ABSOLUTELY PROHIBITED.
3. ALL FIRE ALARM CONDUIT SHALL BE 3/4"C. UNLESS NOTED OTHERWISE. ALL FIRE ALARM CONDUCTORS SHALL BE INSTALLED IN AN APPROVED RACEWAY.
4. ALL CONDUCTORS SHALL BE THWN (WET) 600V. USING #12 AWG FOR ALL ALARM AND FA DEVICE POWER CIRCUITS UNLESS NOTED OTHERWISE.
5. ALL CONDUCTORS SHALL BE #16 TWISTED SHIELDED PAIR FOR ALL INITIATION CIRCUITS UNLESS NOTED OTHERWISE.
6. CONTRACTOR SHALL FIELD VERIFY NEW DEVICES AND MATCH EXISTING PRIOR TO ROUGH–IN.
7. COLOR CODING OF CONDUCTORS AS RECOMMENDED BY MANUFACTURERS REPRESENTATIVE AND AS INDICATED BELOW:
FIRE ALARM AUDIBLE – (1) BLACK (NEG.), (1) RED (POS.)
FIRE ALARM SMOKE/HEAT – (1) LT. BLUE (NEG.), (1) YELLOW (POS.)
FIRE ALARM VISUAL – (1) GREY (NEG.), (1) PINK (POS.)

FACP

SYMBOL	MANUFACTURER & MODEL #	DESCRIPTION	QTY. ADDED	STAND–BY M.A.	STAND–BY TOTAL M.A.	STAND–BY CONDITION CSFM
FACP	NEW NOTIFIER AFP 200	FIRE ALARM CONTROL PANEL W/ UDACT DIALER	1	.310	.310	7165–0028:164
FAAP	NEW NOTIFIER LCD–80	FIRE ALARM ANNUNCIATOR PANEL	1	.010	.010	7120–0028:156
	NOTIFIER NBG–12LX	FIRE ALARM PULL STATION MTD. +48" A.F.F.	5	.003	.015	7150–0028:199
SD	NOTIFIER IPX–751 W/ B710LP BASE	FIRE ALARM MULTI SENSOR SMOKE DETECTOR, SURFACE TO CEILING	1	.003	.003	7258–0028:186
DD	NOTIFIER DHX–501	FIRE ALARM DUCT DETECTOR	10	.002	.020	3240–0028:158
TS	SYSTEM SENSOR OSY2	FIRE ALARM TAMPER SWITCH W/ MONITOR MODULE	1	N/A	N/A	7770–1209:149
FS	SYSTEM SENSOR PIBV2	FIRE ALARM FLOW SWITCH W/ MONITOR MODULE	1	N/A	N/A	7770–1209:140

(2) NEW 12.0AH BATTERIES

x24HR	.358
SUB TOTAL	8.59 AHR
SUB TOTAL	.143 AHR
TOTAL	8.733 AHR

= 3.267 AHR SPARE

FACP

SYMBOL	MANUFACTURER & MODEL #	DESCRIPTION	QTY. ADDED	BATTERY CALCULATIONS M.A.	BATTERY CALCULATIONS TOTAL M.A.	ALARM CONDITION CSFM
	SYSTEM SENSOR MA12/24–WWB	FIRE ALARM HORN MTD +80" AFF	3	.045	.135	7135–1209:124
15	GENTEX GES3–24WR	FIRE ALARM STROBE, MTD. +80" A.F.F. NUMBER INDICATES CANDELA RATING TO SET SWITCH	18	.055	.99	7125–0569:123
15	GENTEX GEC3–24WR	FIRE ALARM HORN/STROBE, MTD. +80" A.F.F. NUMBER INDICATES CANDELA RATING TO SET SWITCH	9	.067	.603	7135–0569:122
				x .083	1.728	=.143AHR

SUBTOTAL = .250AHR

FIRE ALARM RISER DIAGRAM

SCALE 1/8" = 1'–0" (2)

ARCHITECT: LICENSED ARCHITECT DAVID HIGGINSON NO.C19168 REN10-31-03 STATE OF CALIFORNIA

REVISIONS	
DATE:	
DATE:	

higginson + cartozian architects, inc.
architecture ◆ planning ◆ design
David Higginson, Architect
127 East State Street
Redlands, California 92373
ph. (909) 793-3100 fax (909) 793-3140

CONSULTANT: JCA Engineering Inc. Electrical Engineering & Consulting
7939 Palm Ave Highland, Ca. 92346
909 864-0223 Fax 909 864-0280 jcaeng@earthlink.net
Job # 03-673 P.M. James Corns

Arlanza Neighborhoods Initiative Project
Arlanza Youth & Family Resource Center
City of Riverside

SHEET TITLE: FIRE ALARM FLOOR PLAN AND FIRE ALARM RISER DIAGRAM

DRAWN BY: SCC
CHECKED BY: JJC
DATE: NOV. 3,2003

SHEET NO: E–3.0

70421 / TS00–02

REGISTERED PROFESSIONAL ENGINEER JACK T. TAMAI No. E6122 Exp. 9/30/06 ELECTRICAL STATE OF CALIFORNIA

\\Adam\c\JCA Engineering Inc\03-673\673_e30.dwg Wed Dec 03 08:53:53 2003 JCA Engineering, Inc.