BRYANT PARK - PARKING LOT RECONSTRUCTION

A CDBG PROJECT

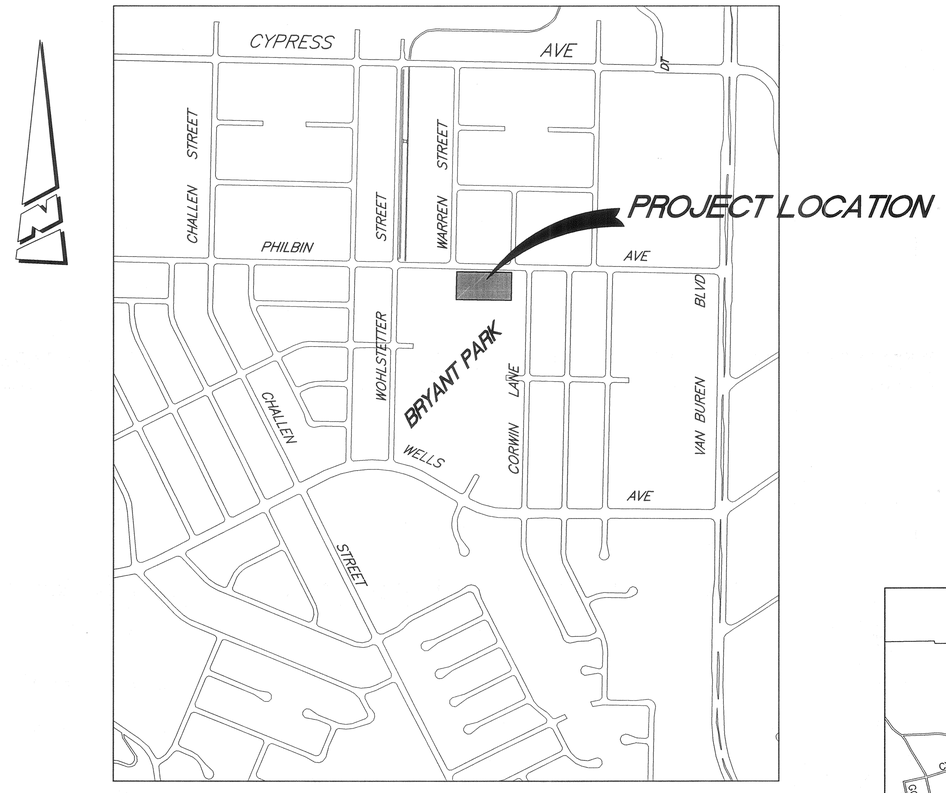

VICINITY MAP

PLAN SHEET INDEX

SHEET #	DWG #	
1	T-1	TITLE SHEET
2	D-1	DEMOLITION PLAN
3	C-1	CONSTRUCTION PLAN
4	I-1	IRRIGATION PLAN
5	I-2	IRRIGATION DETAILS
6	P-1	PLANTING PLAN
7	E-1	ELECTRICAL PLAN
8	E-2	ELECTRICAL DETAILS

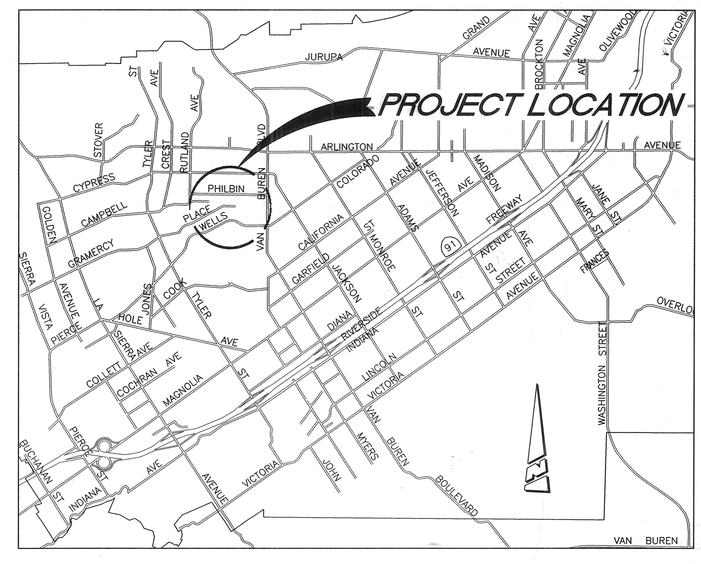

LOCATION MAP

MARK			

DESIGNED BY _____ DRAWN BY _____ CHECKED BY _____

CITY OF RIVERSIDE, CALIFORNIA
PARK & RECREATION DEPARTMENT

APPROVED BY	BY	DATE
SENIOR PARK PLANNER	TCS	10/14/99
PARK SUPERINTENDENT	SRL	10/14/99
CHIEF P.W. INSPECTOR		
STREET SERVICES		
SURVEYOR		
TRAFFIC DIVISION		
PUBLIC WORKS		

APPROVED BY _____
PARK & RECREATION DIRECTOR
DATE 10/14/99

BRYANT PARK PARKING LOT
TITLE SHEET

HORIZ. SCALE: --

P-596703
DWG T-1
SHEET 1 OF 8

220-528200-440120-12103

BID NO.: 5619

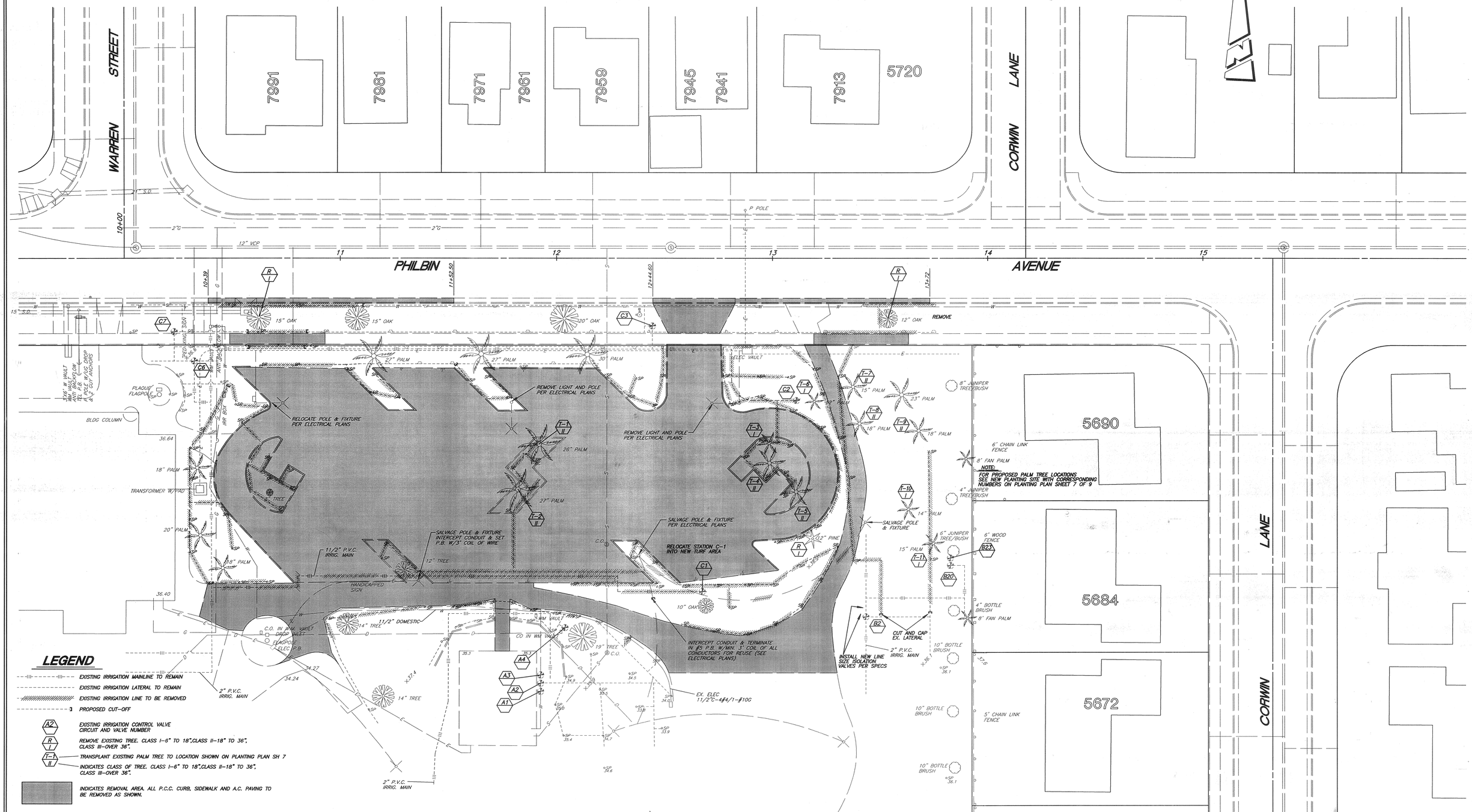

MARK

DESIGNED BY _____ DRAWN BY _____ CHECKED BY _____

CITY OF RIVERSIDE, CALIFORNIA
PARK & RECREATION DEPARTMENT

APPROVED BY	BY	DATE
SENIOR PARK PLANNER		10/14/99
PARK SUPERINTENDENT		10-14-99
CHIEF P.W. INSPECTOR		
STREET SERVICES		
SURVEYOR		
PUBLIC WORKS		

APPROVED BY
PARK & RECREATION DIRECTOR
DATE 10/14/99

BRYANT PARK PARKING LOT DEMOLITION PLAN

HORIZ. SCALE: 1" = 20'

P-596703
DWG D-1
SHEET 2 OF 8

220-528200-440120-12103

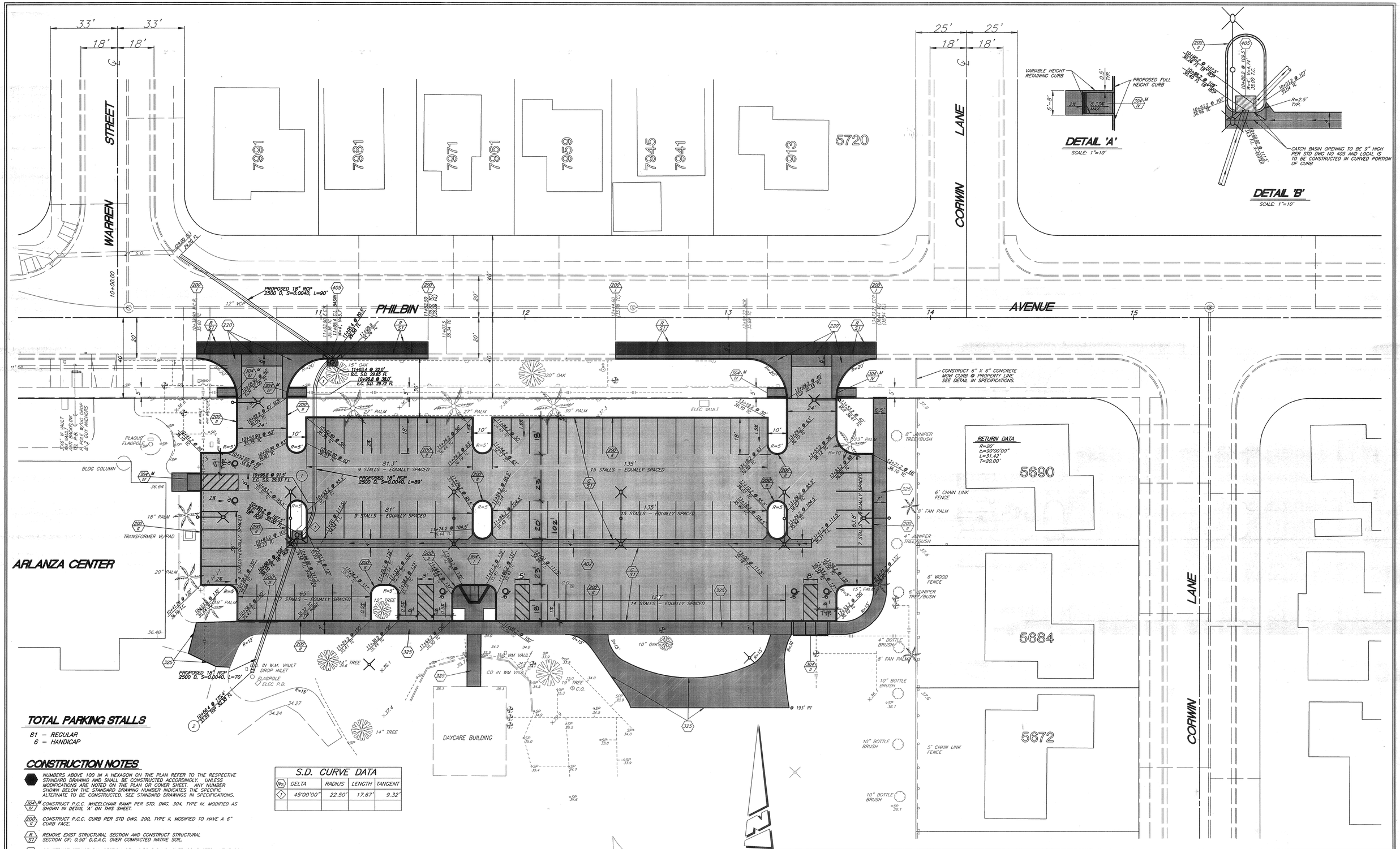

TOTAL PARKING STALLS

81 – REGULAR
6 – HANDICAP

CONSTRUCTION NOTES

- ⬢ NUMBERS ABOVE 100 IN A HEXAGON ON THE PLAN REFER TO THE RESPECTIVE STANDARD DRAWING AND SHALL BE CONSTRUCTED ACCORDINGLY. UNLESS MODIFICATIONS ARE NOTED ON THE PLAN OR COVER SHEET. ANY NUMBER SHOWN BELOW THE STANDARD DRAWING NUMBER INDICATES THE SPECIFIC ALTERNATE TO BE CONSTRUCTED. SEE STANDARD DRAWINGS IN SPECIFICATIONS.
- (304/IV M) CONSTRUCT P.C.C. WHEELCHAIR RAMP PER STD. DWG. 304, TYPE IV, MODIFIED AS SHOWN IN DETAIL 'A' ON THIS SHEET.
- (200/II) CONSTRUCT P.C.C. CURB PER STD DWG. 200, TYPE II, MODIFIED TO HAVE A 6" CURB FACE.
- (R/S1) REMOVE EXIST STRUCTURAL SECTION AND CONSTRUCT STRUCTURAL SECTION OF: 0.50' D.G.A.C. OVER COMPACTED NATIVE SOIL.
- (C/S1) CONSTRUCT STRUCTURAL SECTION OF: 0.50 D.G.A.C. OVER COMPACTED NATIVE SOIL
- (ADJ) ADJUST TO GRADE
- (1) CONSTRUCT CATCH BASIN PER STD DWG 405, MODIFIED AS SHOWN IN DETAIL 'B' ON THIS SHEET.
- (2) INSTALL 24" X24" PRECAST CONCRETE CATCH BASIN WITH TRAFFIC RATED GRATE. BROOKS PRODUCTS NO. 2424 OR EQUIVALENT.

S.D. CURVE DATA

No.	DELTA	RADIUS	LENGTH	TANGENT
1	45°00'00"	22.50'	17.67'	9.32'

MARK

DESIGNED BY _____ DRAWN BY _____ CHECKED BY _____

CITY OF RIVERSIDE, CALIFORNIA
PARK & RECREATION DEPARTMENT

APPROVED BY	BY	DATE
SENIOR PARK PLANNER		10/14/99
PARK SUPERINTENDENT		10-14-99
CHIEF P.W. INSPECTOR		
STREET SERVICES		
SURVEYOR		
TRAFFIC DIVISION		
PUBLIC WORKS		

APPROVED BY _____
PARK & RECREATION DIRECTOR
DATE 10/14/99

BRYANT PARK PARKING LOT CONSTRUCTION PLAN

HORIZ. SCALE: 1" = 20'

P-596703
DWG C-1
SHEET 3 OF 8

220-528200-440120-12103

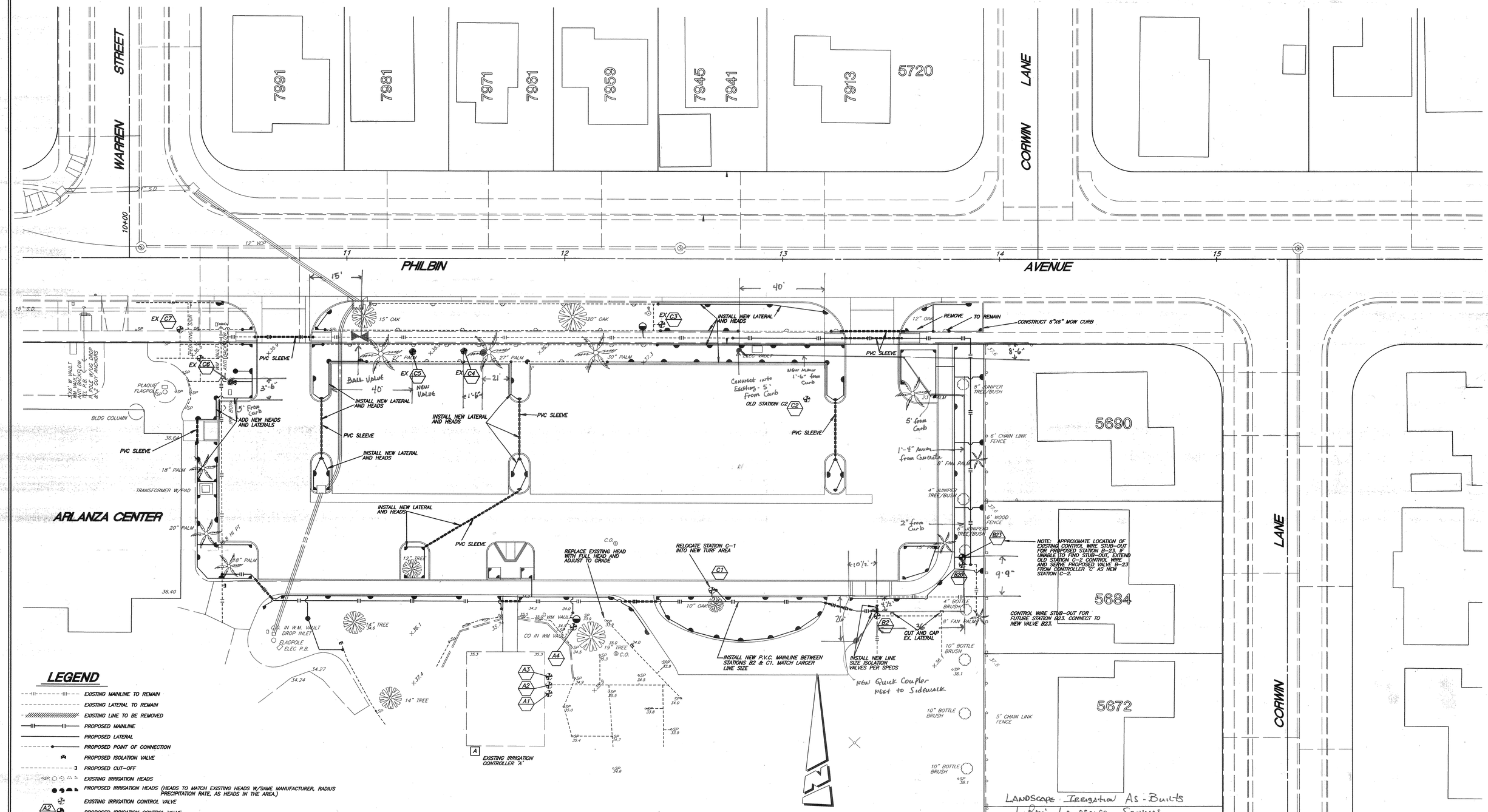

LEGEND

- EXISTING MAINLINE TO REMAIN
- EXISTING LATERAL TO REMAIN
- EXISTING LINE TO BE REMOVED
- PROPOSED MAINLINE
- PROPOSED LATERAL
- PROPOSED POINT OF CONNECTION
- PROPOSED ISOLATION VALVE
- PROPOSED CUT-OFF
- EXISTING IRRIGATION HEADS
- PROPOSED IRRIGATION HEADS (HEADS TO MATCH EXISTING HEADS W/SAME MANUFACTURER, RADIUS PRECIPITATION RATE, AS HEADS IN THE AREA.)
- EXISTING IRRIGATION CONTROL VALVE
- A2 PROPOSED IRRIGATION CONTROL VALVE
- PROPOSED QUICK COUPLER VALVE
- PROPOSED PVC SLEEVE
- A2 IRRIGATION CONTROL VALVE CIRCUIT AND VALVE NUMBER
- R I REMOVE EXISTING TREE. CLASS I-6" TO 18",CLASS II-18" TO 36", CLASS III-OVER 36".
- T-1 II TRANSPLANT EXISTING PALM TREE TO LOCATION SHOWN ON PLANTING PLAN
- INDICATES CLASS OF TREE. CLASS I-6" TO 18",CLASS II-18" TO 36", CLASS III-OVER 36".

NOTE:

IRRIGATION CONTROLLER 'A' IS LOCATED @ THE SOUTHWEST CORNER OF THE DAY CARE BUILDING.

IRRIGATION CONTROLLER 'B' IS LOCATED 420'± SOUTH OF PARKING LOT AT EAST PROPERTY LINE OF PARK

IRRIGATION CONTROLLER 'C' IS LOCATED IN THE COMMUNITY CENTER.

MARK			

DESIGNED BY _____ DRAWN BY _____ CHECKED BY _____

CITY OF RIVERSIDE, CALIFORNIA
PARK & RECREATION DEPARTMENT

APPROVED BY	BY	DATE
SENIOR PARK PLANNER		10/14/11
PARK SUPERINTENDENT		
CHIEF P.W. INSPECTOR		
STREET SERVICES		
SURVEYOR		
TRAFFIC DIVISION		
PUBLIC WORKS		

APPROVED BY _____ PARK & RECREATION DIRECTOR

DATE 10/14/11

BRYANT PARK PARKING LOT IRRIGATION PLAN

HORIZ. SCALE: 1" = 20'

P-596703
DWG I-1
SHEET 4 OF 8

220-528200-440120-12103

NOTES

1) EACH VALVE SHALL HAVE ITS OWN TEE OR ELL CONNECTION TO THE MAINLINE. NO MANIFOLD CONNECTIONS

2) PROVIDE MINIMUM 3' CLEAR DISTANCE BETWEEN VALVES

3) INSTALL VALVE BOX IN A MANNER THAT BOX DOES NOT REST ON ANY IRRIGATION LINE

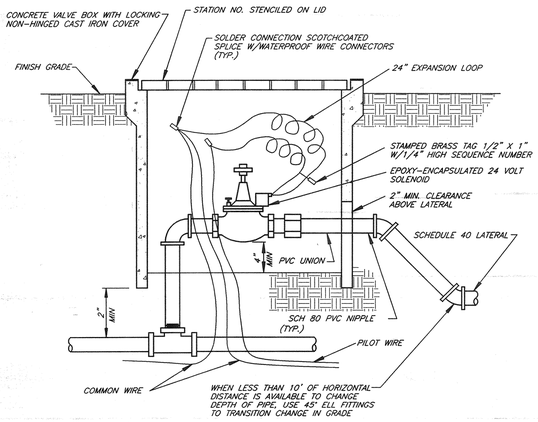

1 TYPICAL AUTOMATIC VALVE

NO SCALE

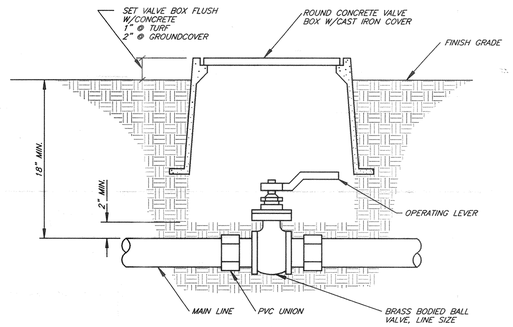

2 TYPICAL BALL VALVE ASSEMBLY

NO SCALE

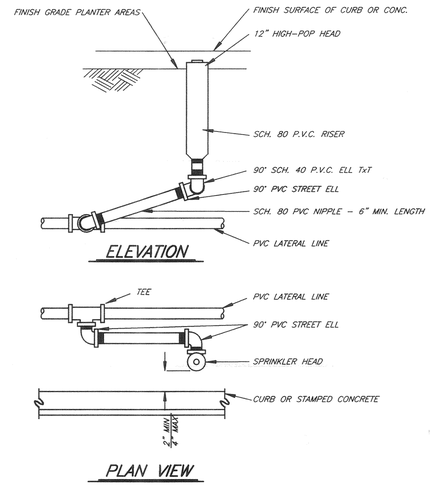

3 TYPICAL SPRAY HEAD ASSEMBLY

NO SCALE

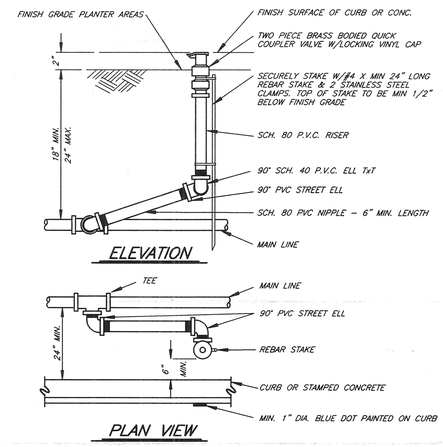

4 TYPICAL QUICK COUPLER VALVE

NO SCALE

MARK			

DESIGNED BY _____ DRAWN BY _____ CHECKED BY _____

CITY OF RIVERSIDE, CALIFORNIA
PARK & RECREATION DEPARTMENT

APPROVED BY	BY	DATE
SENIOR PARK PLANNER	[illegible]	10/14/99
PARK SUPERINTENDENT	[illegible]	10-14-99
CHIEF P.W. INSPECTOR		
STREET SERVICES		
SURVEYOR		
PUBLIC WORKS		

APPROVED BY [signature]
PARK & RECREATION DIRECTOR
DATE 10/14/99

BRYANT PARK PARKING LOT IRRIGATION DETAILS

HORIZ. SCALE: AS SHOWN

P-596703
DWG I-2
SHEET 5 OF 8

220-528200-440120-12103

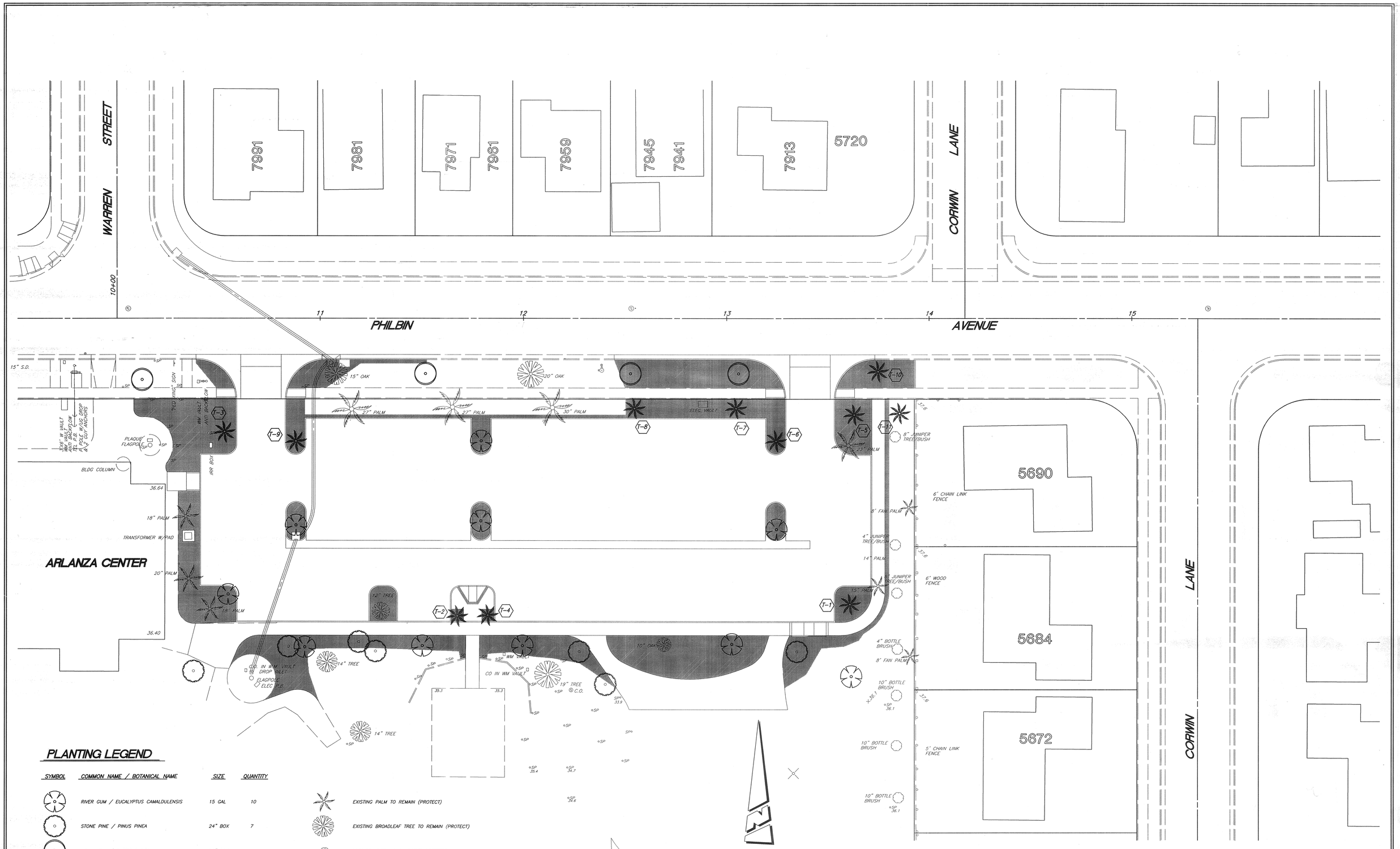

PLANTING LEGEND

SYMBOL	COMMON NAME / BOTANICAL NAME	SIZE	QUANTITY
	RIVER GUM / EUCALYPTUS CAMALDULENSIS	15 GAL	10
	STONE PINE / PINUS PINEA	24" BOX	7
	HOLLY OAK / QUERCUS ILEX	24" BOX	4
	TRANSPLANTED EXISTING PALM TREE PER # SEE DEMOLITION PLAN FOR SOURCE LOCATIONS	---	11
	REGRADE AND PLANT AREA WITH TURF		
	EXISTING PALM TO REMAIN (PROTECT)		
	EXISTING BROADLEAF TREE TO REMAIN (PROTECT)		
	EXISTING JUNIPER TO REMAIN (PROTECT)		

NOTE:

ALL TREES ARE TO BE FIELD SPOTTED BY THE PARKS PROJECTS INSPECTOR PRIOR TO DIGGING PLANT PITS. LOCATIONS SHOWN ARE DIAGRAMMATIC ONLY.

MARK

DESIGNED BY _____ DRAWN BY _____ CHECKED BY _____

CITY OF RIVERSIDE, CALIFORNIA
PARK & RECREATION DEPARTMENT

APPROVED BY	BY	DATE
SENIOR PARK PLANNER		10/14/99
PARK SUPERINTENDENT		10/14/99
CHIEF P.W. INSPECTOR		
STREET SERVICES		
SURVEYOR		
TRAFFIC DIVISION		
PUBLIC WORKS		

APPROVED BY _____
PARK & RECREATION DIRECTOR
DATE 10/14/99

BRYANT PARK PARKING LOT PLANTING PLAN

HORIZ. SCALE: 1" = 20'

P-596703
DWG P-1
SHEET 6 OF 8

220-528200-440120-12103

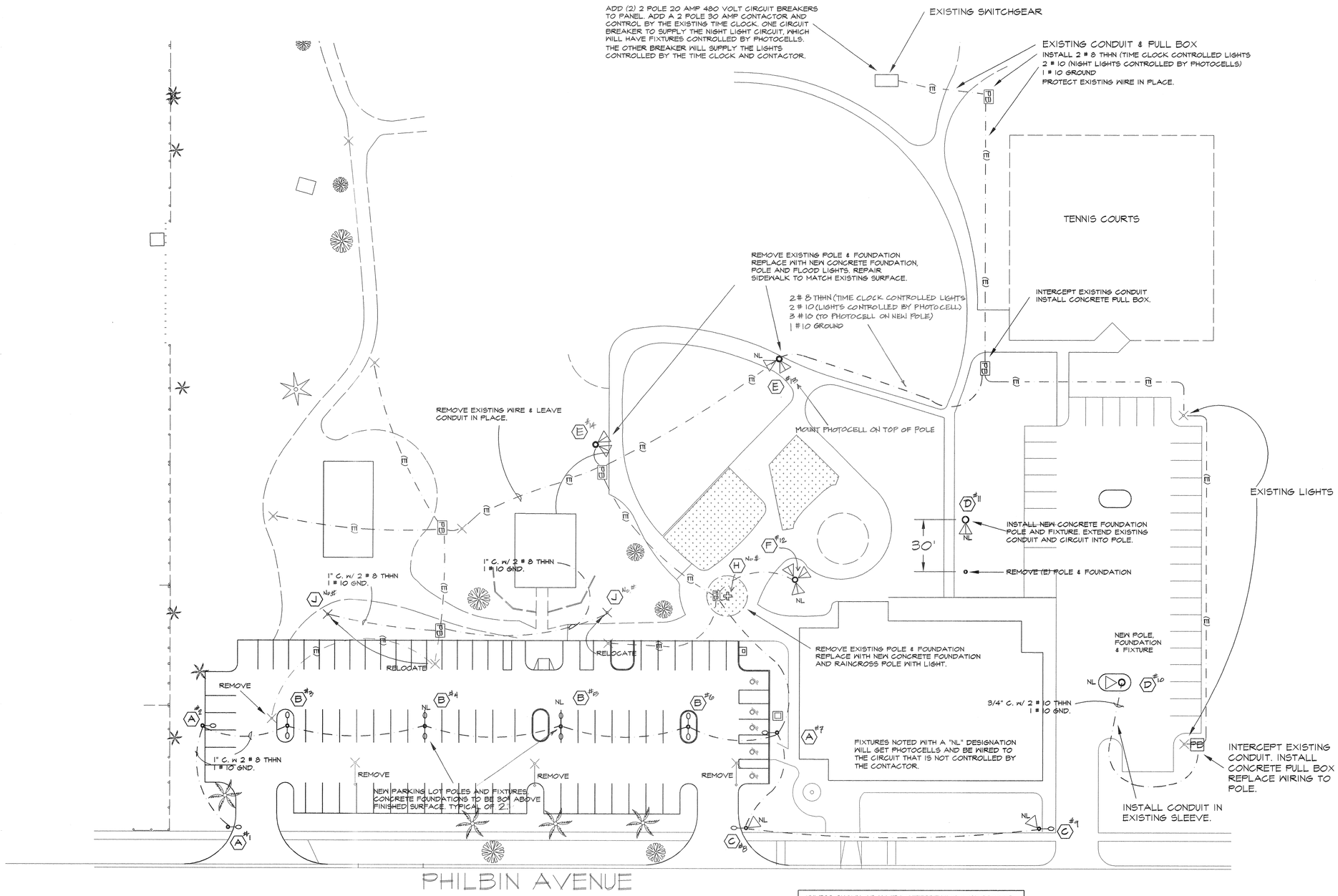

UNLESS SHOWN OR NOTED DIFFERENTLY, CONTRACTOR SHALL INSTALL THE FOLLOWING WIRE IN EITHER THE NEW 1" CONDUIT OR THE EXISTING CONDUIT.
2 # 8 THHN (TIME CLOCK CONTROLLED LIGHTS
2 # 10 (NIGHT LIGHTS CONTROLLED BY PHOTOCELLS)
1 # 10 GROUND

LEGEND:
A #1 ← POLE NUMBER
POLE TYPE

REGISTERED PROFESSIONAL ENGINEER
RUSSELL A. NEAL
No. E11028
Exp. 06/30/01
ELECTRICAL
STATE OF CALIFORNIA

DWG. E-1

MARK	REVISIONS	APPR.	DATE

DESIGNED BY _____ DRAWN BY _____ CHECKED BY _____

CITY OF RIVERSIDE, CALIFORNIA
PARK & RECREATION DEPARTMENT

APPROVED BY	BY	DATE
PARKS MANAGER	[signature]	10-14-99
RECREATION MANAGER		
SENIOR PARK PLANNER	[signature]	10/14/99

APPROVED BY [signature]
PARK & RECREATION DIRECTOR
DATE 10/14/99

BRYANT PARK

IMPROVEMENT PLANS FOR THE AREA & PARKING LOT LIGHTING

HORIZ. SCALE: 1" = 30'

ACCT. NO. 220-5280200-440120-12103

P-596703

SHEET 7 OF 8

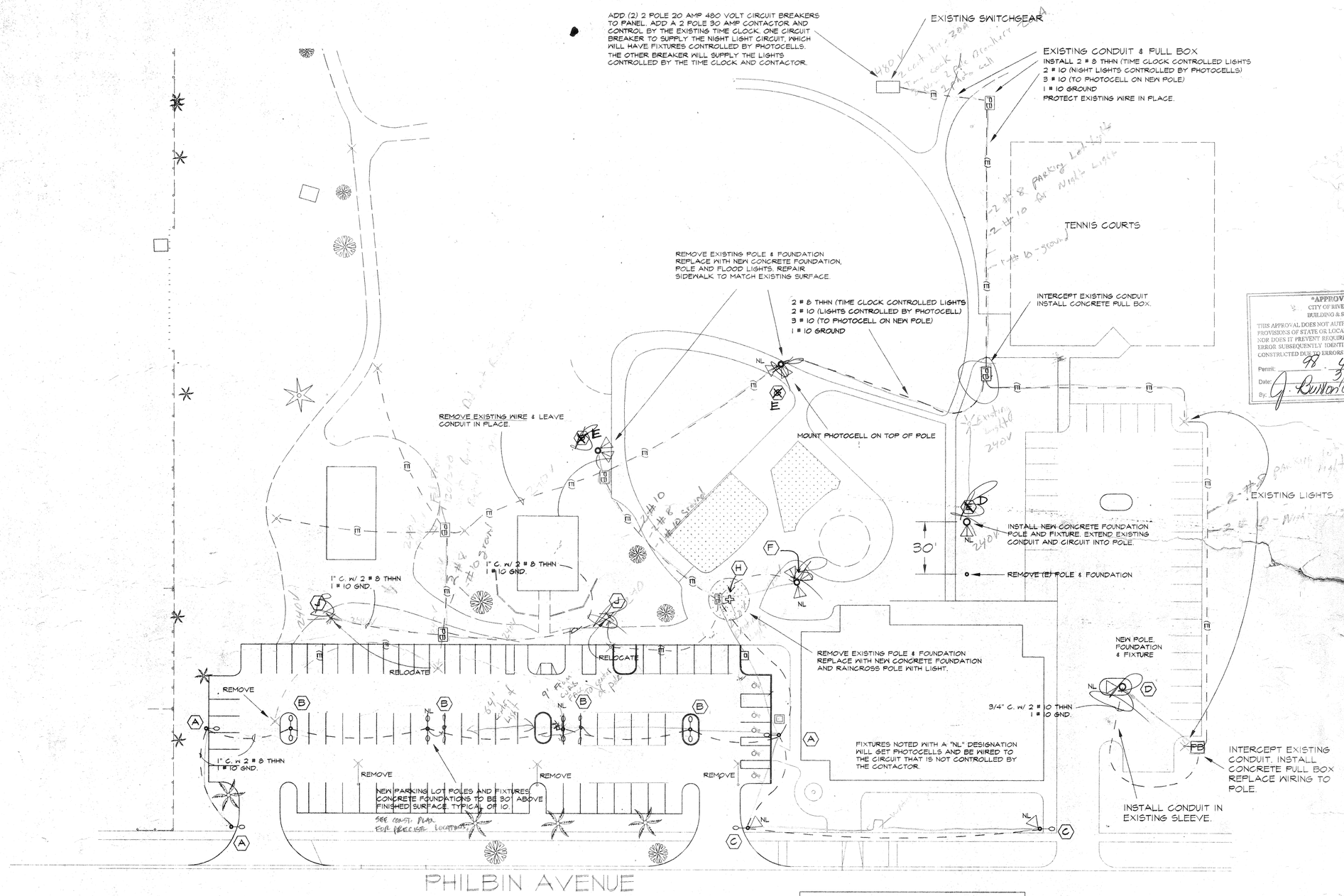

UNLESS SHOWN OR NOTED DIFFERENTLY, CONTRACTOR SHALL INSTALL THE FOLLOWING WIRE IN EITHER THE NEW 1" CONDUIT OR THE EXISTING CONDUIT.
2 # 8 THHN (TIME CLOCK CONTROLLED LIGHTS
2 # 10 (NIGHT LIGHTS CONTROLLED BY PHOTOCELLS)
1 # 10 GROUND

"APPROVED"
CITY OF RIVERSIDE
BUILDING & SAFETY
THIS APPROVAL DOES NOT AUTHORIZE VIOLATION OF ANY PROVISIONS OF STATE OR LOCAL BUILDING REGULATIONS NOR DOES IT PREVENT REQUIRING CORRECTIONS OF ANY ERROR SUBSEQUENTLY IDENTIFIED ON THESE PLANS OR CONSTRUCTED DUE TO ERRORS IN THESE PLANS.
Permit: 98 4441
Date: 3/3/00
By: J. Burton

CITY OF RIVERSIDE
SEL ___ OF ___
SUBMITTAL DATE: Oct 13, 1999
ADDRESS: 7950 PHILBIN AV
LOCATION:
PC #: 98-4441
APPLICANT: CITY OF RIVERSIDE PARK & REC
PHONE #: 909 715 3466
DESCRIPTION: RECONFIGURE PARKING LOT AND ADD PARKING AND EXTERIOR BUILDING LIGHTS
PLAN CHECK BIN #: 1-P

REGISTERED PROFESSIONAL ENGINEER
RUSSELL A. NEAL II
Exp. 06/30/01
ELECTRICAL
STATE OF CALIFORNIA

0-3-745
0-2-789

MARK	REVISIONS	APPR.	DATE

DESIGNED BY _____ DRAWN BY _____ CHECKED BY _____

CITY OF RIVERSIDE, CALIFORNIA
PARK & RECREATION DEPARTMENT

APPROVED BY	BY	DATE
PARKS MANAGER		
RECREATION MANAGER		
SENIOR PARK PLANNER		

APPROVED BY _____
PARK & RECREATION DIRECTOR
DATE _____

BRYANT PARK
IMPROVEMENT PLANS FOR THE AREA & PARKING LOT LIGHTING
HORIZ. SCALE: 1" = 30'

ACCT. NO. 220-528C200-440120-12103
P-596703
SHEET 1 OF 2

AS-BUILT

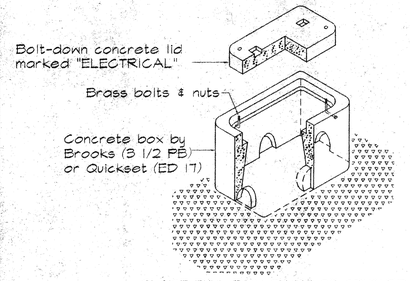

PLACE PULL BOX ON 12" OF CRUSHED ROCK. ROCK BASE SHALL BE 6" LARGER IN ALL DIMENSIONS THAN PULL BOX.

NO SCALE

PB PULL BOX DETAILS

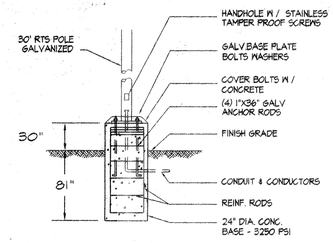

RE-INFORCING STEEL:
6 # 6 VERTICALS
3 TIES @ 12" O.C. WITH TOP (4) @ 4" O.C.

CONCRETE BASE FOR PARKING LOT POLES
NTS.

(A)(B)(C)(D) POLE BASE DETAILS

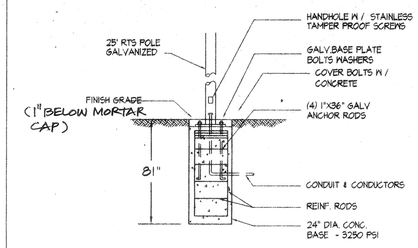

RE-INFORCING STEEL:
6 # 6 VERTICALS
3 TIES @ 12" O.C. WITH TOP (4) @ 4" O.C.

CONCRETE BASE FOR PARK FLOOD FIXTURES
NTS.

(E)(F)(X) POLE BASE DETAILS

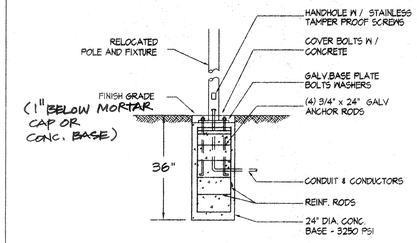

RE-INFORCING STEEL:
4 # 4 VERTICALS
3 TIES @ 12" O.C. WITH THREE @ TOP 6".

CONCRETE BASE FOR RELOCATED FIXTURES
NTS.

(J) POLE BASE DETAILS

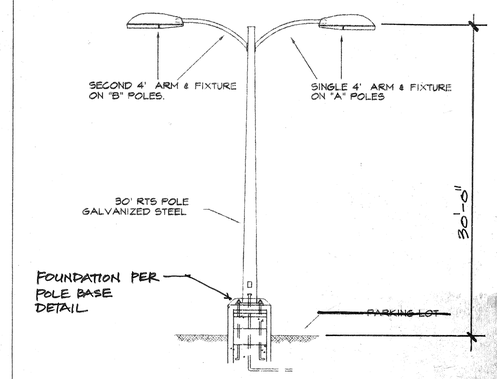

(A)(B) POLE & FIXTURE DETAILS

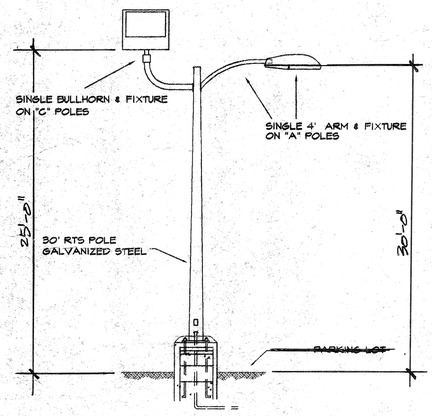

(C) POLE & FIXTURE DETAILS

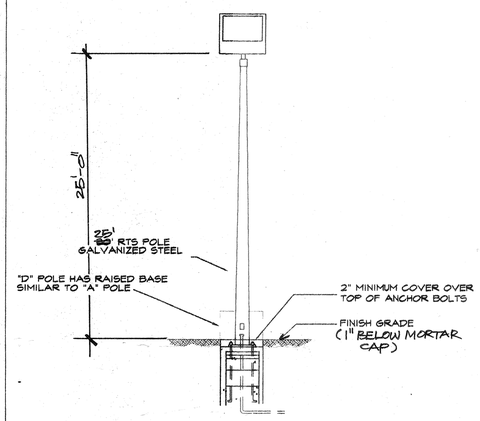

(D)(X) POLE & FIXTURE DETAILS

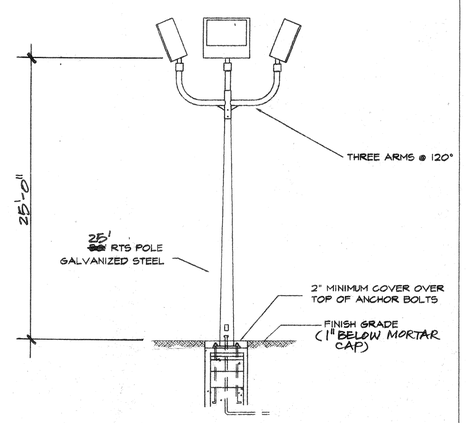

(F) POLE BASE DETAILS

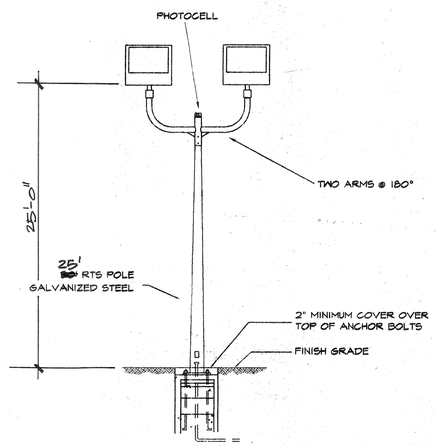

(G)(E) POLE BASE DETAILS

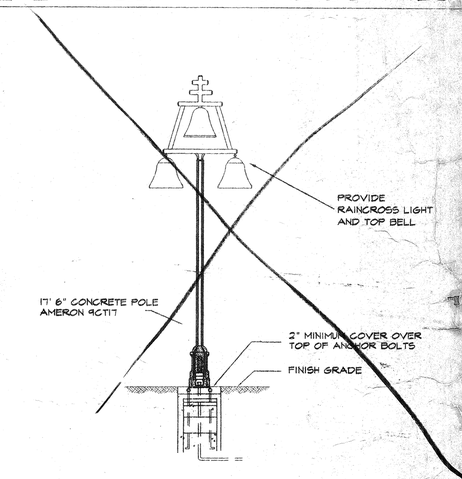

(H) POLE & FIXTURE DETAILS

SYM	DESCRIPTION	VOLTAGE	WATTS	TYPE	MOUNTING
○	COBRA HEAD FIXTURE, HORIZONTAL MOUNTING W/ CUTOFF OPTICS, PHOTOCELL CONTROL (NL) GE # M2AC-15-S-5-A-1-G-MC32	480	150	HPS	
▽	GENERAL PURPOSE FLOODLIGHT, SLIPFITTER MOUNTED - GE # PF4S-40-M-5-A-1-6X5-GR-K-LVS-P4F	480	400	MH	MOUNT ON BULLHORNS OR POLES, AS SHOWN IN THE DETAILS ON THIS SHEET. FIXTURES WILL REQUIRE NIGHT AIMING.
✚	17' 6" CONCRETE RAINCROSS POLE. AMERON # 9CT17 WITH LIGHT FIXTURES. SEE SPECIFICATIONS FOR CITY STANDARDS	480	100	HPS	

LIGHTING FIXTURE SCHEDULE

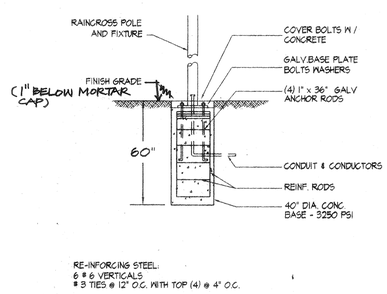

RE-INFORCING STEEL:
6 # 6 VERTICALS
3 TIES @ 12" O.C. WITH TOP (4) @ 4" O.C.

CONCRETE BASE FOR RAINCROSS FIXTURE
NTS

(H) POLE BASE DETAILS

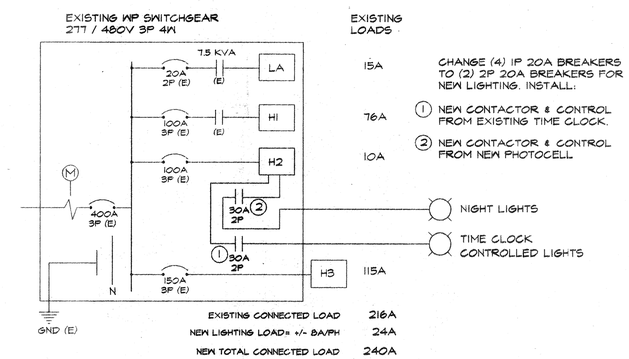

CHANGE (4) 1P 20A BREAKERS TO (2) 2P 20A BREAKERS FOR NEW LIGHTING. INSTALL:

1. NEW CONTACTOR & CONTROL FROM EXISTING TIME CLOCK.
2. NEW CONTACTOR & CONTROL FROM NEW PHOTOCELL

EXISTING CONNECTED LOAD	216A
NEW LIGHTING LOAD= +/- 8A/PH	24A
NEW TOTAL CONNECTED LOAD	240A

SINGLE LINE DIAGRAM

REGISTERED PROFESSIONAL ENGINEER
RUSSELL A. NEAL III
No. E11028
Exp. 06/30/02
ELECTRICAL
STATE OF CALIFORNIA

MARK	REVISIONS	APPR.	DATE

DESIGNED BY _____ DRAWN BY _____ CHECKED BY _____

CITY OF RIVERSIDE, CALIFORNIA
PARK & RECREATION DEPARTMENT

APPROVED BY	BY	DATE
PARKS MANAGER		
RECREATION MANAGER		
SENIOR PARK PLANNER		

APPROVED BY _____
PARK & RECREATION DIRECTOR
DATE _____

BRYANT PARK

IMPROVEMENT PLANS FOR THE AREA & PARKING LOT LIGHTING

HORIZ. SCALE: 1" = 30'

ACCT. NO. 220-5280200-440120-12103

P-596703

SHEET 2 OF 2

AS-BUILT

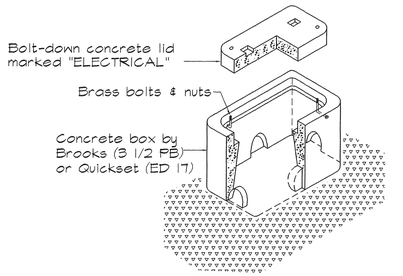

PLACE PULL BOX ON 12" OF CRUSHED ROCK. ROCK BASE SHALL BE 6" LARGER IN ALL DIMENSIONS THAN PULL BOX.

NO SCALE

PB PULL BOX DETAILS

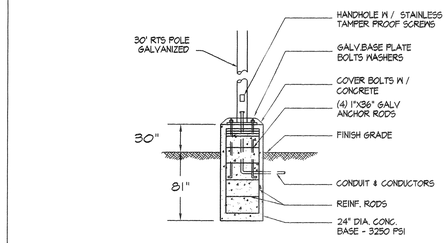

RE-INFORCING STEEL:
6 # 6 VERTICALS
3 TIES @ 12" O.C. WITH TOP (4) @ 4" O.C.

CONCRETE BASE FOR PARKING LOT POLES
N.T.S.

Ⓐ Ⓑ Ⓒ Ⓓ POLE BASE DETAILS

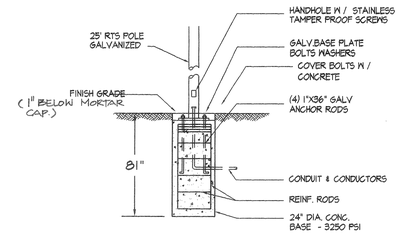

RE-INFORCING STEEL:
6 # 6 VERTICALS
3 TIES @ 12" O.C. WITH TOP (4) @ 4" O.C.

CONCRETE BASE FOR PARK FLOOD FIXTURES
N.T.S.

Ⓔ Ⓕ POLE BASE DETAILS

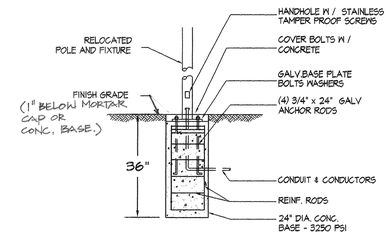

RE-INFORCING STEEL:
4 # 4 VERTICALS
3 TIES @ 12" O.C. WITH THREE @ TOP 6".

CONCRETE BASE FOR RELOCATED FIXTURES
N.T.S.

Ⓙ POLE BASE DETAILS

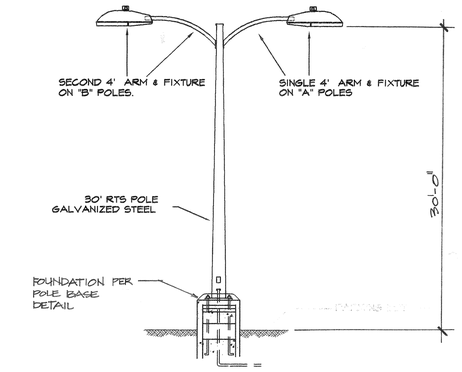

Ⓐ Ⓑ POLE & FIXTURE DETAILS

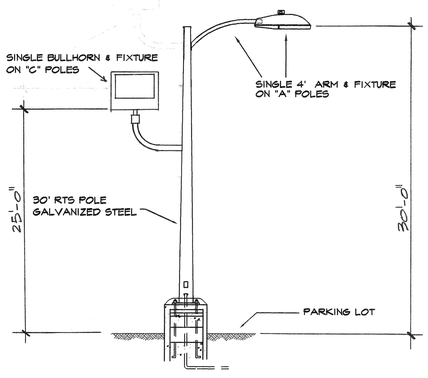

Ⓒ POLE & FIXTURE DETAILS

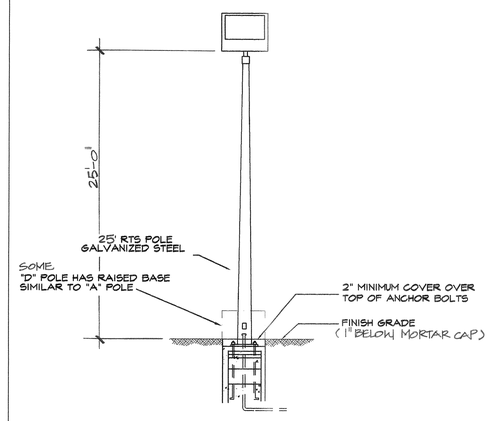

Ⓓ POLE & FIXTURE DETAILS

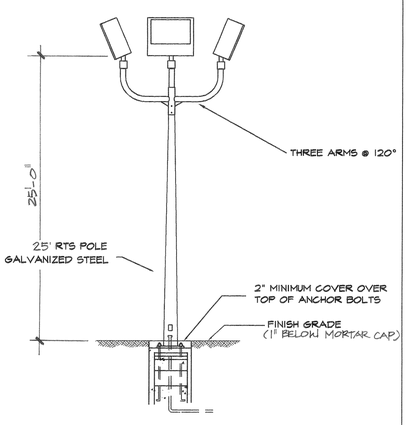

Ⓕ POLE BASE DETAILS

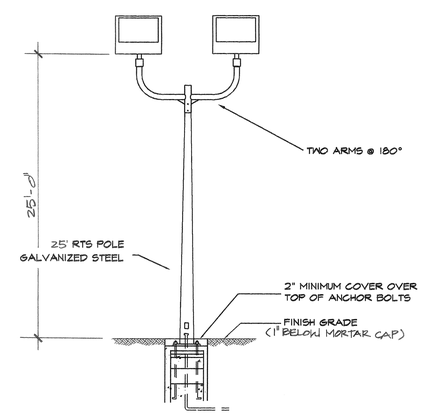

Ⓔ POLE BASE DETAILS

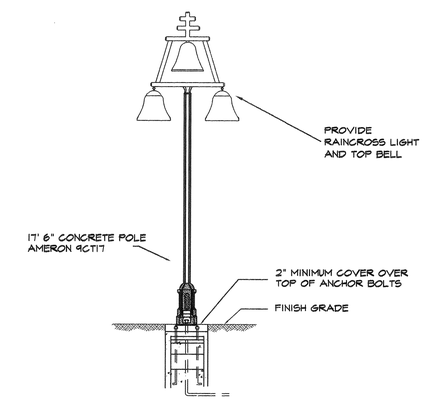

Ⓗ POLE & FIXTURE DETAILS

SYM	DESCRIPTION	VOLTAGE	WATTS	TYPE	MOUNTING
○	COBRA HEAD FIXTURE. HORIZONTAL MOUNTING W/ CUTOFF OPTICS, PHOTOCELL CONTROL (NL) GE # M2RC-15-S-5-A-2-G-MC32 GE # M2RC-15-S-5-A-1-G-MC32 (TIME CLOCK CONTROL)	480	150	HPS	PROVIDE PHOTOCELL WHERE "NL" IS INDICATED.
▽	GENERAL PURPOSE FLOODLIGHT, SLIPFITTER MOUNTED - GE # PF4S-40-M-5-A-2-6X5-GR-K PROVIDE PHOTOCELL ON "NL" CIRCUITS GENERAL PURPOSE FLOODLIGHT, SLIPFITTER MOUNTED - GE # PF4S-40-M-5-A-1-6X5-GR-K NO PHOTOCELLS REQUIRED ON TIME CLOCK CIRCUITS	480	400	MH	MOUNT ON BULLHORNS OR POLES, AS SHOWN IN THE DETAILS ON THIS SHEET. FIXTURES WILL REQUIRE NIGHT AIMING.
✚	17' 6" CONCRETE RAINCROSS POLE. AMERON # 9CT17 WITH LIGHT FIXTURES. SEE SPECIFICATIONS FOR CITY STANDARDS	480	100	HPS	

LIGHTING FIXTURE SCHEDULE

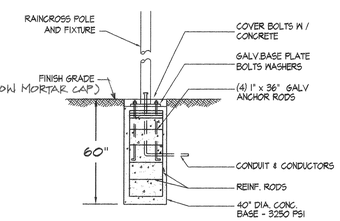

RE-INFORCING STEEL:
6 # 6 VERTICALS
3 TIES @ 12" O.C. WITH TOP (4) @ 4" O.C.

CONCRETE BASE FOR RAINCROSS FIXTURE
N.T.S.

Ⓗ POLE BASE DETAILS

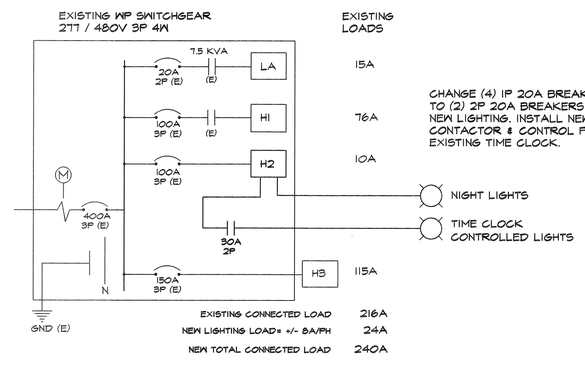

CHANGE (4) 1P 20A BREAKERS TO (2) 2P 20A BREAKERS FOR NEW LIGHTING. INSTALL NEW CONTACTOR & CONTROL FROM EXISTING TIME CLOCK.

SINGLE LINE DIAGRAM

REGISTERED PROFESSIONAL ENGINEER
RUSSELL A. NEAL
ENG. E11028
Exp. 06/30/01
ELECTRICAL
STATE OF CALIFORNIA

DWG. E-2

MARK	REVISIONS	APPR.	DATE

DESIGNED BY _____ DRAWN BY _____ CHECKED BY _____

CITY OF RIVERSIDE, CALIFORNIA
PARK & RECREATION DEPARTMENT

APPROVED BY	BY	DATE
PARKS MANAGER		10-14-99
RECREATION MANAGER		
SENIOR PARK PLANNER		10/14/99

APPROVED BY _____ PARK & RECREATION DIRECTOR
DATE 10/14/99

BRYANT PARK

IMPROVEMENT PLANS FOR THE AREA & PARKING LOT LIGHTING

HORIZ. SCALE: 1" = 30'

ACCT. NO. 220-5280200-440120-12103

P-596703

SHEET 8 OF 8