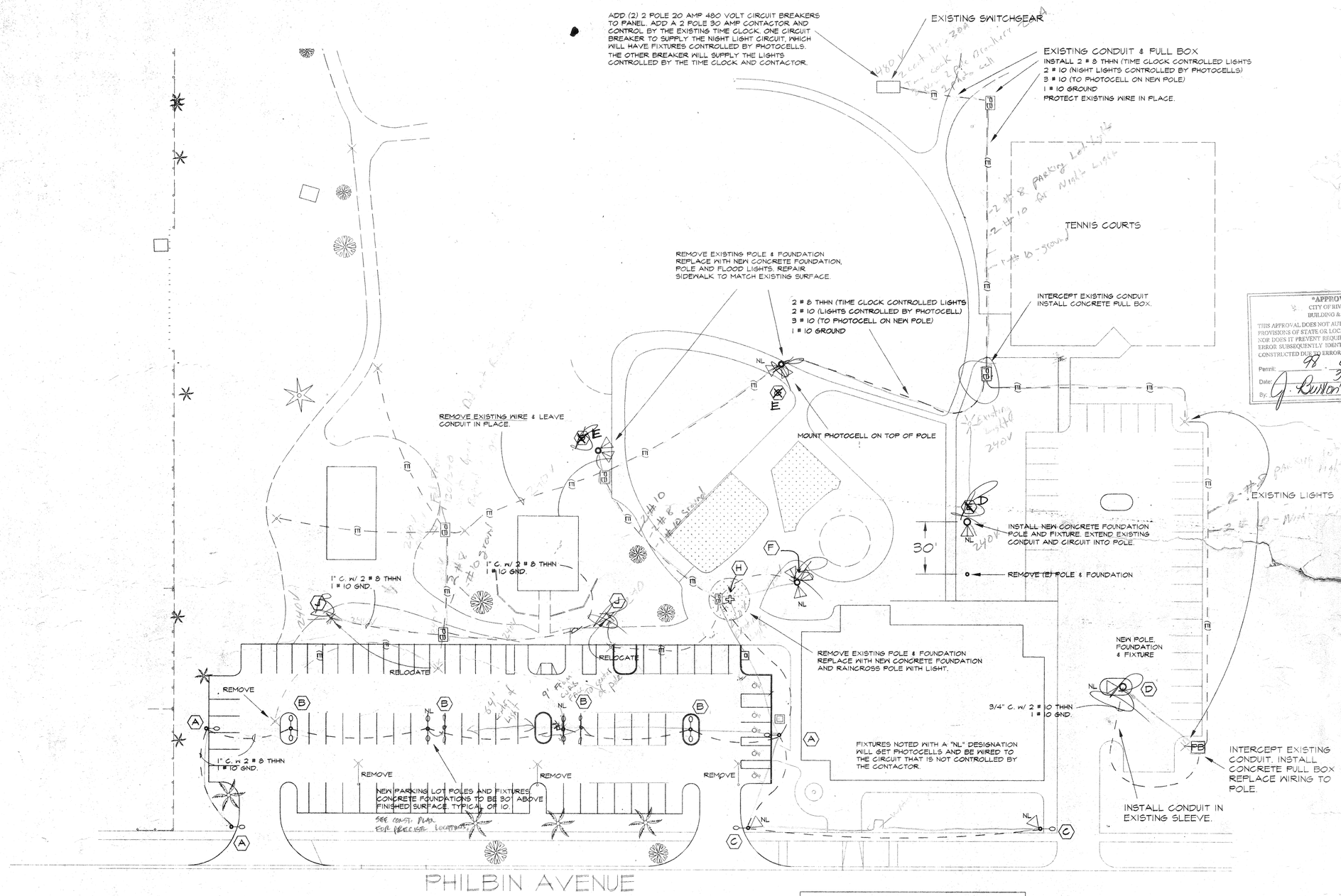

UNLESS SHOWN OR NOTED DIFFERENTLY, CONTRACTOR SHALL INSTALL THE FOLLOWING WIRE IN EITHER THE NEW 1" CONDUIT OR THE EXISTING CONDUIT.
2 # 8 THHN (TIME CLOCK CONTROLLED LIGHTS
2 # 10 (NIGHT LIGHTS CONTROLLED BY PHOTOCELLS)
1 # 10 GROUND

"APPROVED"
CITY OF RIVERSIDE
BUILDING & SAFETY
THIS APPROVAL DOES NOT AUTHORIZE VIOLATION OF ANY PROVISIONS OF STATE OR LOCAL BUILDING REGULATIONS NOR DOES IT PREVENT REQUIRING CORRECTIONS OF ANY ERROR SUBSEQUENTLY IDENTIFIED ON THESE PLANS OR CONSTRUCTED DUE TO ERRORS IN THESE PLANS.
Permit: 98 4441
Date: 3/3/00
By: J. Burton

CITY OF RIVERSIDE
SUBMITTAL DATE: Oct 13, 1999
SET ___ OF ___
ADDRESS 7950 PHILBIN AV
LOCATION
PC #: 98-4441
APPLICANT: CITY OF RIVERSIDE PARK & REC
PHONE #: 909 715 3466
DESCRIPTION: RECONFIGURE PARKING LOT AND ADD PARKING AND EXTERIOR BUILDING LIGHTS
PLAN CHECK BIN #: 1-P

REGISTERED PROFESSIONAL ENGINEER
RUSSELL A. NEAL II
Exp. 06/30/01
ELECTRICAL
STATE OF CALIFORNIA

0-3-745
0-2-789

MARK	REVISIONS	APPR.	DATE

DESIGNED BY ____ DRAWN BY ____ CHECKED BY ____

CITY OF RIVERSIDE, CALIFORNIA
PARK & RECREATION DEPARTMENT

APPROVED BY	BY	DATE
PARKS MANAGER		
RECREATION MANAGER		
SENIOR PARK PLANNER		

APPROVED BY
PARK & RECREATION DIRECTOR
DATE

BRYANT PARK

IMPROVEMENT PLANS FOR THE AREA & PARKING LOT LIGHTING

HORIZ. SCALE: 1" = 30'

ACCT. NO. 220-528C200-440120-12103

P-596703

SHEET 1 OF 2

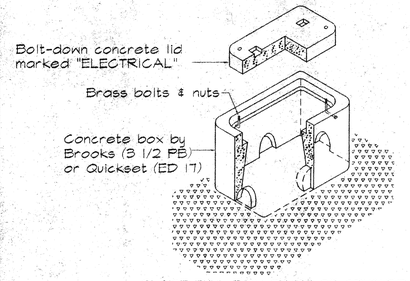

PLACE PULL BOX ON 12" OF CRUSHED ROCK. ROCK BASE SHALL BE 6" LARGER IN ALL DIMENSIONS THAN PULL BOX.

NO SCALE

PB PULL BOX DETAILS

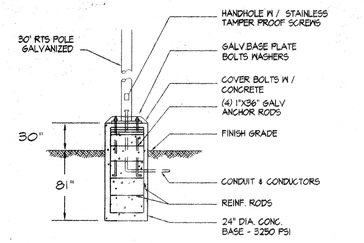

RE-INFORCING STEEL:
6 # 6 VERTICALS
3 TIES @ 12" O.C. WITH TOP (4) @ 4" O.C.

CONCRETE BASE FOR PARKING LOT POLES
NTS.

(A)(B)(C)(D) POLE BASE DETAILS

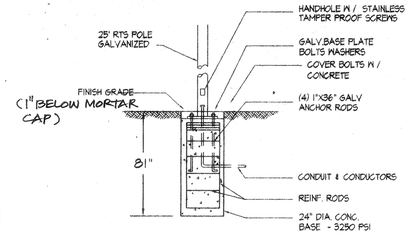

RE-INFORCING STEEL:
6 # 6 VERTICALS
3 TIES @ 12" O.C. WITH TOP (4) @ 4" O.C.

CONCRETE BASE FOR PARK FLOOD FIXTURES
NTS.

(E)(F)(X) POLE BASE DETAILS

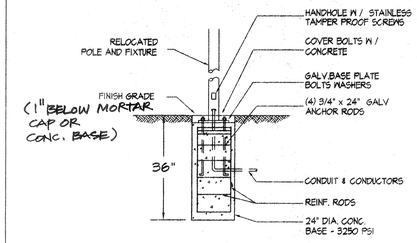

RE-INFORCING STEEL:
4 # 4 VERTICALS
3 TIES @ 12" O.C. WITH THREE @ TOP 6".

CONCRETE BASE FOR RELOCATED FIXTURES
NTS.

(J) POLE BASE DETAILS

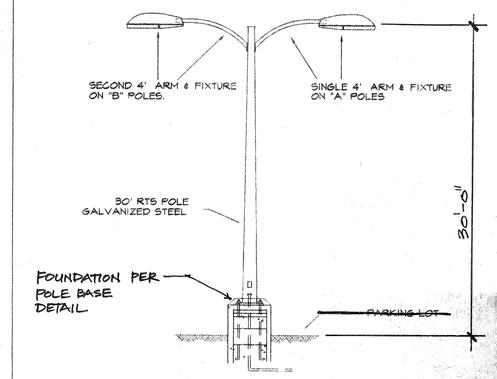

(A)(B) POLE & FIXTURE DETAILS

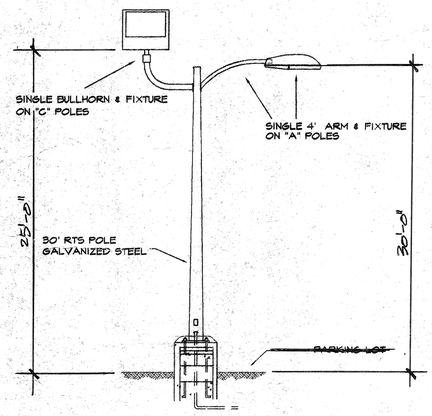

(C) POLE & FIXTURE DETAILS

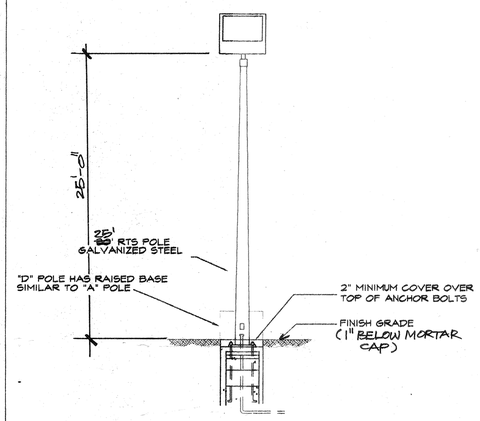

(D)(X) POLE & FIXTURE DETAILS

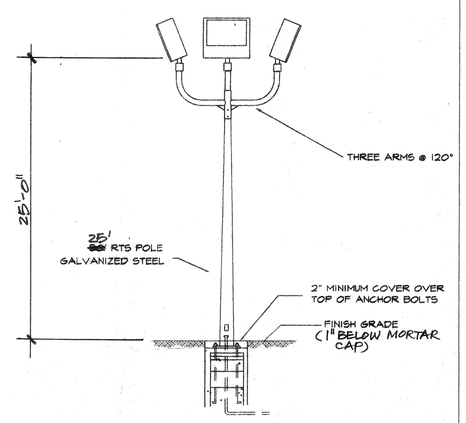

(F) POLE BASE DETAILS

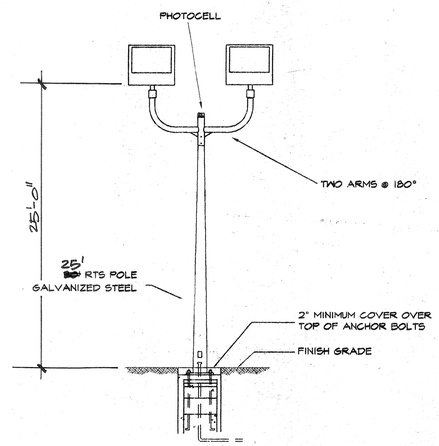

(&E) POLE BASE DETAILS

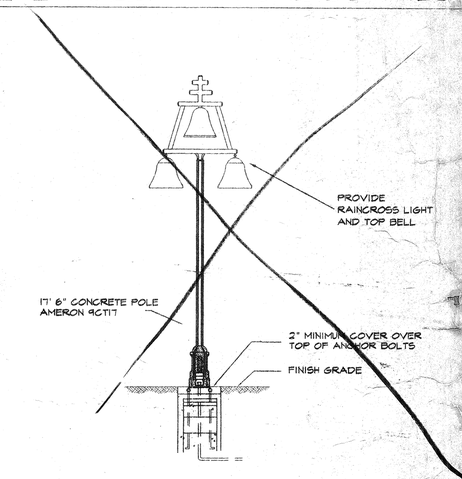

(H) POLE & FIXTURE DETAILS

SYM	DESCRIPTION	VOLTAGE	WATTS	TYPE	MOUNTING
○	COBRA HEAD FIXTURE, HORIZONTAL MOUNTING W/ CUTOFF OPTICS, PHOTOCELL CONTROL (NL) GE # M2AC-15-S-5-A-1-G-MC32	480	150	HPS	
▽	GENERAL PURPOSE FLOODLIGHT, SLIPFITTER MOUNTED - GE # PF4S-40-M-5-A-1-6X5-GR-K-LVS-P4F	480	400	MH	MOUNT ON BULLHORNS OR POLES, AS SHOWN IN THE DETAILS ON THIS SHEET. FIXTURES WILL REQUIRE NIGHT AIMING.
✚	17' 6" CONCRETE RAINCROSS POLE. AMERON # 9CT17 WITH LIGHT FIXTURES. SEE SPECIFICATIONS FOR CITY STANDARDS	480	100	HPS	

LIGHTING FIXTURE SCHEDULE

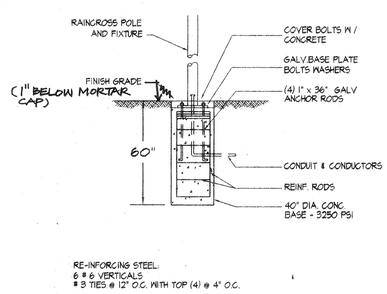

RE-INFORCING STEEL:
6 # 6 VERTICALS
3 TIES @ 12" O.C. WITH TOP (4) @ 4" O.C.

CONCRETE BASE FOR RAINCROSS FIXTURE
NTS

(H) POLE BASE DETAILS

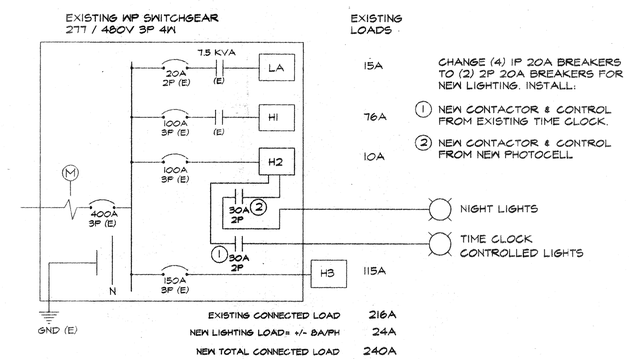

CHANGE (4) 1P 20A BREAKERS TO (2) 2P 20A BREAKERS FOR NEW LIGHTING. INSTALL:

1. NEW CONTACTOR & CONTROL FROM EXISTING TIME CLOCK.
2. NEW CONTACTOR & CONTROL FROM NEW PHOTOCELL

EXISTING CONNECTED LOAD	216A
NEW LIGHTING LOAD= +/- 8A/PH	24A
NEW TOTAL CONNECTED LOAD	240A

SINGLE LINE DIAGRAM

REGISTERED PROFESSIONAL ENGINEER
RUSSELL A. NEAL III
No. E11028
Exp. 06/30/02
ELECTRICAL
STATE OF CALIFORNIA

MARK	REVISIONS	APPR.	DATE

DESIGNED BY ____ DRAWN BY ____ CHECKED BY ____

CITY OF RIVERSIDE, CALIFORNIA
PARK & RECREATION DEPARTMENT

APPROVED BY	BY	DATE
PARKS MANAGER		
RECREATION MANAGER		
SENIOR PARK PLANNER		

APPROVED BY ____ PARK & RECREATION DIRECTOR

DATE ____

BRYANT PARK

IMPROVEMENT PLANS FOR THE AREA & PARKING LOT LIGHTING

HORIZ. SCALE: 1" = 30'

ACCT. NO. 220-5280200-440120-12103

P-596703

SHEET 2 OF 2

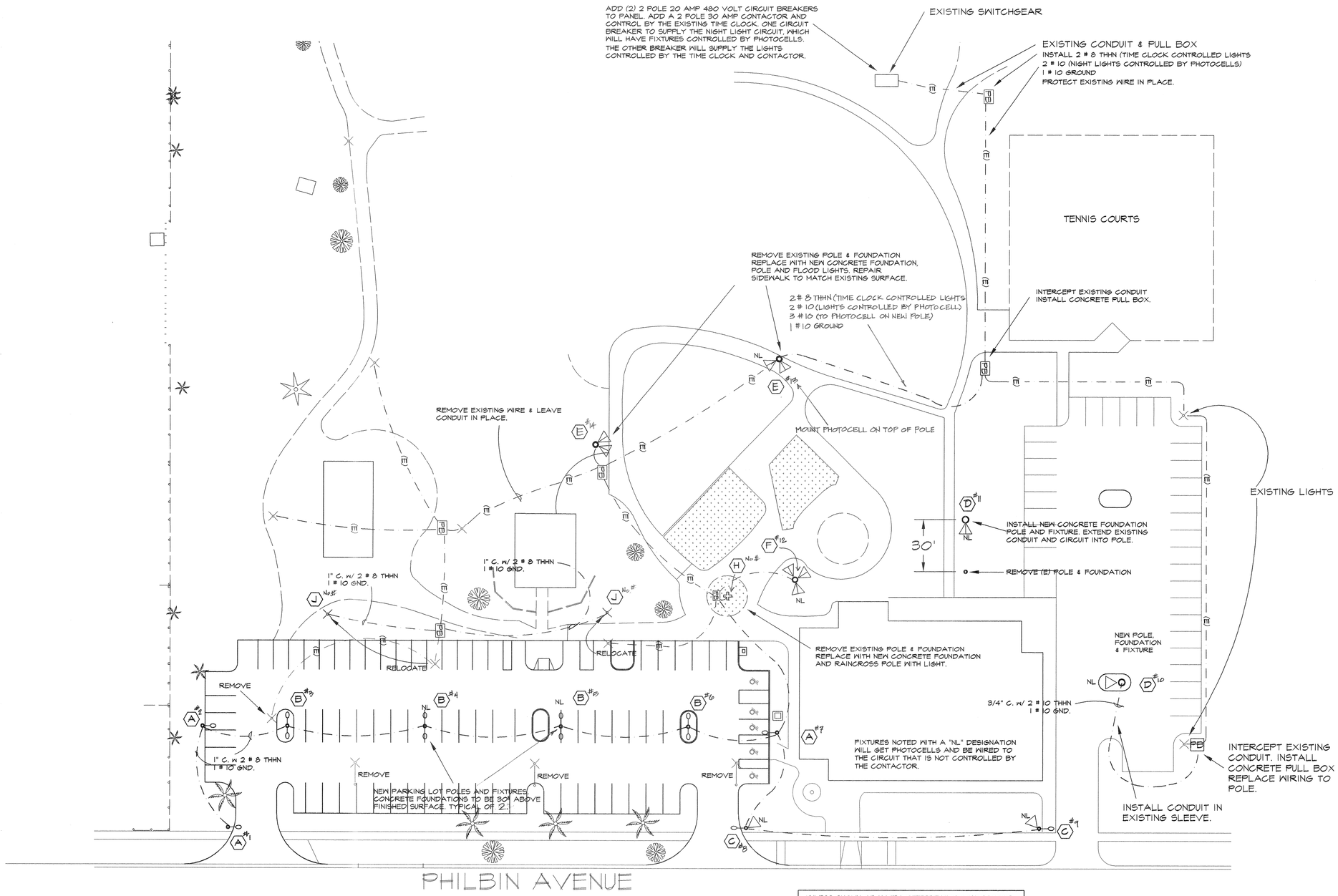

UNLESS SHOWN OR NOTED DIFFERENTLY, CONTRACTOR SHALL INSTALL THE FOLLOWING WIRE IN EITHER THE NEW 1" CONDUIT OR THE EXISTING CONDUIT.
2 # 8 THHN (TIME CLOCK CONTROLLED LIGHTS
2 # 10 (NIGHT LIGHTS CONTROLLED BY PHOTOCELLS)
1 # 10 GROUND

LEGEND:
A #1 ← POLE NUMBER
POLE TYPE

REGISTERED PROFESSIONAL ENGINEER
RUSSELL A. NEAL
No. E11028
Exp. 06/30/01
ELECTRICAL
STATE OF CALIFORNIA

DWG. E-1

MARK	REVISIONS	APPR.	DATE

DESIGNED BY _____ DRAWN BY _____ CHECKED BY _____

CITY OF RIVERSIDE, CALIFORNIA
PARK & RECREATION DEPARTMENT

APPROVED BY	BY	DATE
PARKS MANAGER	[signature]	10-14-99
RECREATION MANAGER		
SENIOR PARK PLANNER	[signature]	10/14/99

APPROVED BY [signature]
PARK & RECREATION DIRECTOR
DATE 10/14/99

BRYANT PARK

IMPROVEMENT PLANS FOR THE AREA & PARKING LOT LIGHTING

HORIZ. SCALE: 1" = 30'

ACCT. NO. 220-5280200-440120-12103

P-596703

SHEET 7 OF 8

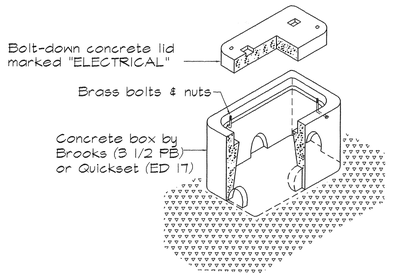

PLACE PULL BOX ON 12" OF CRUSHED ROCK. ROCK BASE SHALL BE 6" LARGER IN ALL DIMENSIONS THAN PULL BOX.

NO SCALE

PB PULL BOX DETAILS

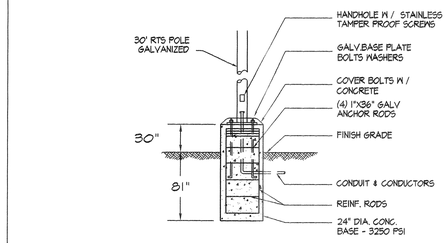

RE-INFORCING STEEL:
6 # 6 VERTICALS
3 TIES @ 12" O.C. WITH TOP (4) @ 4" O.C.

CONCRETE BASE FOR PARKING LOT POLES
N.T.S.

Ⓐ Ⓑ Ⓒ Ⓓ POLE BASE DETAILS

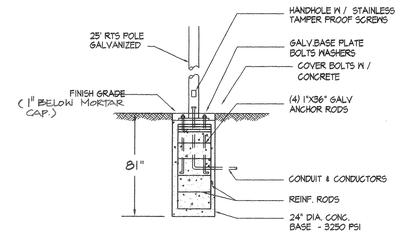

RE-INFORCING STEEL:
6 # 6 VERTICALS
3 TIES @ 12" O.C. WITH TOP (4) @ 4" O.C.

CONCRETE BASE FOR PARK FLOOD FIXTURES
N.T.S.

Ⓔ Ⓕ POLE BASE DETAILS

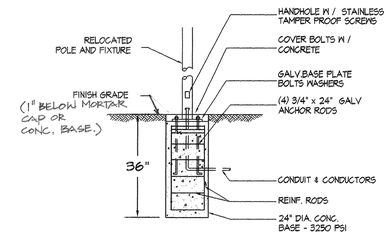

RE-INFORCING STEEL:
4 # 4 VERTICALS
3 TIES @ 12" O.C. WITH THREE @ TOP 6".

CONCRETE BASE FOR RELOCATED FIXTURES
N.T.S.

Ⓙ POLE BASE DETAILS

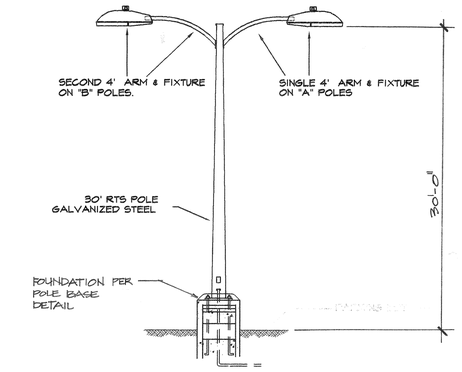

Ⓐ Ⓑ POLE & FIXTURE DETAILS

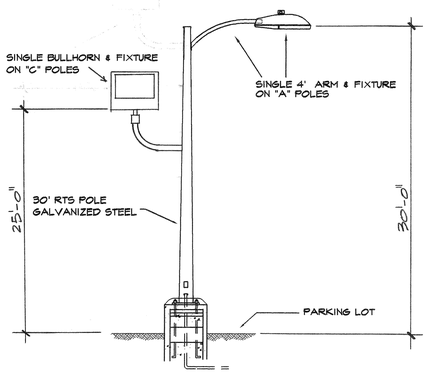

Ⓒ POLE & FIXTURE DETAILS

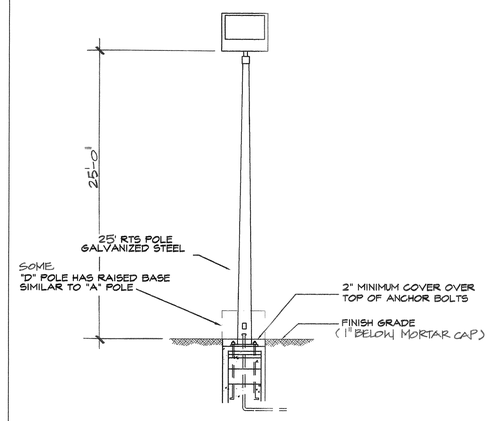

Ⓓ POLE & FIXTURE DETAILS

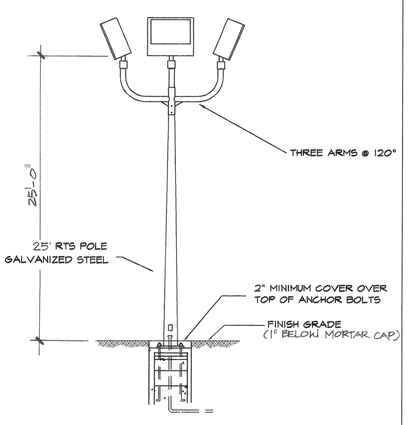

Ⓕ POLE BASE DETAILS

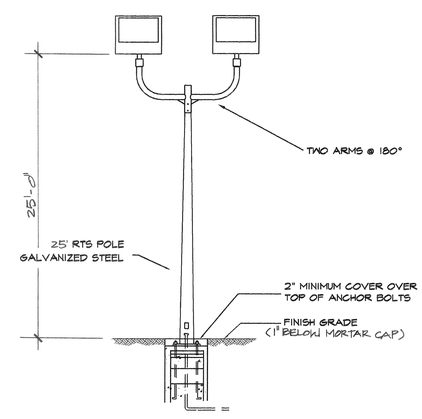

Ⓔ POLE BASE DETAILS

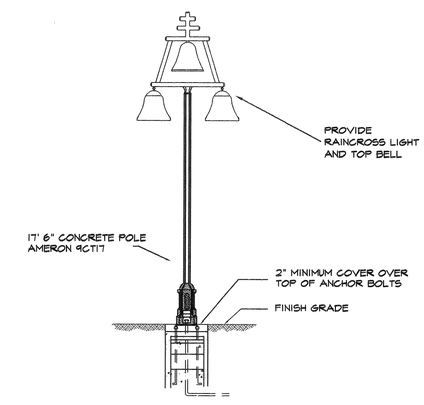

Ⓗ POLE & FIXTURE DETAILS

SYM	DESCRIPTION	VOLTAGE	WATTS	TYPE	MOUNTING
○	COBRA HEAD FIXTURE. HORIZONTAL MOUNTING W/ CUTOFF OPTICS, PHOTOCELL CONTROL (NL) GE # M2RC-15-S-5-A-2-G-MC32 GE # M2RC-15-S-5-A-1-G-MC32 (TIME CLOCK CONTROL)	480	150	HPS	PROVIDE PHOTOCELL WHERE "NL" IS INDICATED.
▽	GENERAL PURPOSE FLOODLIGHT, SLIPFITTER MOUNTED - GE # PF4S-40-M-5-A-2-6X5-GR-K PROVIDE PHOTOCELL ON "NL" CIRCUITS GENERAL PURPOSE FLOODLIGHT, SLIPFITTER MOUNTED - GE # PF4S-40-M-5-A-1-6X5-GR-K NO PHOTOCELLS REQUIRED ON TIME CLOCK CIRCUITS	480	400	MH	MOUNT ON BULLHORNS OR POLES, AS SHOWN IN THE DETAILS ON THIS SHEET. FIXTURES WILL REQUIRE NIGHT AIMING.
✚	17' 6" CONCRETE RAINCROSS POLE. AMERON # 9CT17 WITH LIGHT FIXTURES. SEE SPECIFICATIONS FOR CITY STANDARDS	480	100	HPS	

LIGHTING FIXTURE SCHEDULE

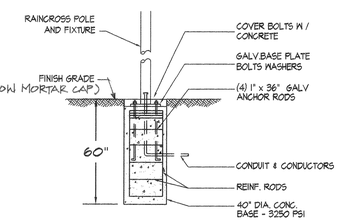

RE-INFORCING STEEL:
6 # 6 VERTICALS
3 TIES @ 12" O.C. WITH TOP (4) @ 4" O.C.

CONCRETE BASE FOR RAINCROSS FIXTURE
N.T.S.

Ⓗ POLE BASE DETAILS

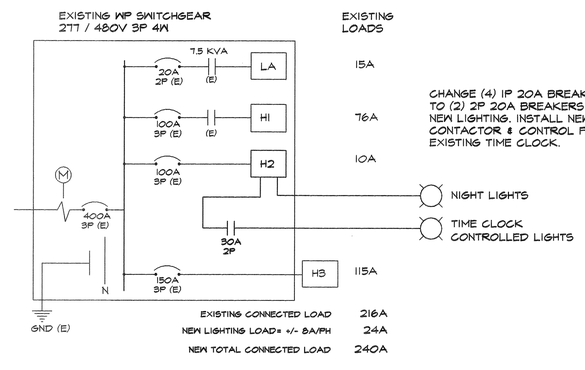

CHANGE (4) 1P 20A BREAKERS TO (2) 2P 20A BREAKERS FOR NEW LIGHTING. INSTALL NEW CONTACTOR & CONTROL FROM EXISTING TIME CLOCK.

SINGLE LINE DIAGRAM

REGISTERED PROFESSIONAL ENGINEER
RUSSELL A. NEAL
ENG. E11028
Exp. 06/30/01
ELECTRICAL
STATE OF CALIFORNIA

DWG. E-2

MARK	REVISIONS	APPR.	DATE

DESIGNED BY _____ DRAWN BY _____ CHECKED BY _____

CITY OF RIVERSIDE, CALIFORNIA
PARK & RECREATION DEPARTMENT

APPROVED BY	BY	DATE
PARKS MANAGER		10-14-99
RECREATION MANAGER		
SENIOR PARK PLANNER		10/14/99

APPROVED BY _____ PARK & RECREATION DIRECTOR
DATE 10/14/99

BRYANT PARK

IMPROVEMENT PLANS FOR THE AREA & PARKING LOT LIGHTING

HORIZ. SCALE: 1" = 30'

ACCT. NO. 220-5280200-440120-12103

P-596703

SHEET 8 OF 8