BRYANT PARK
DAY CARE FACILITY
CITY OF RIVERSIDE

PROJECT NO. 91027
D.M.B. NO. 4194

LAMINATED PLASTIC CASEWORK

I. MATERIALS

1. EXTERIOR:
   - A. EXPOSED AFTER INSTALLATION – 1/32" THICK LAMINATE PLASTIC
   - B. UNEXPOSED AFTER INSTALLATION – BACKING SHEET

2. INTERIOR:
   - A. SEMI-EXPOSED (BEHIND DOORS) – MELAMINE WHITE
   - B. EXPOSED (OPEN CASES) – 1/32" THICK LAMINATE PLASTIC
   - C. ✓ LAUNDRY – MELAMINE WHITE

3. DOORS AND DRAWER FRONTS
   - A. FACE AND BACK – PLASTIC LAMINATE FACE CABINET LINER BACKSIDE LAMINATED TO PARTICLE BOARD TOTAL THICKNESS 3/4". BAND ALL FOUR (4) EDGES WITH 1/32" THICK MATCHING PLASTIC.

4. DRAWER SIDES, BACKS AND BOTTOMS:
   - A. SIDES AND BACKS – 1/2" MELAMINE
   - B. BOTTOMS – 1/4" MELAMINE

5. BACKS:
   - A. FIXED CASES – 1/4" MELAMINE

6. BASE:
   - A. UNEXPOSED (COVERED WITH 4" TOPSET BASE BY OTHERS) – MELAMINE OR PLASTIC
   - B. EXPOSED (WHERE NOTED) – 1/32" THICK LAMINATE PLASTIC

7. EDGEBANDING:
   - A. 1/32" THICK MATCHING PLASTIC THERMOBONDED TO ALL VISIBLE EDGES MATCH FACE COLOR
   - B. SEMI-EXPOSED – WHITE PVC

II. SCRIBE

1. SCRIBE EXPOSED ENDS AND/OR EXPOSED BOTTOMS TO WALL.

III. MISCELLANEOUS ITEM

1. ADJUSTABLE SHELVES OVER 36" LONG TO BE 1" THICK.

HARDWARE

FINISH – U.S. 26D

HINGES	BLUM 125
PULLS	QUALITY 812
CATCHES	N/A
ELBOW CATCHES	N/A
LOCKS:	
DOORS	N/A
DRAWERS	N/A
ADJUSTABLE SHELVES:	
5 MM HOLE, 1¼ CENTERS	ALL SHLF. CABINETS
CENTERS	
SHELF CLIPS	KV345 NICKEL
DRAWER GUIDES:	
REGULAR	N/A
FULL EXTENSION	N/A

LAMINATED PLASTIC TOPS

I. SURFACE

- A. MIN. – .050" – STANDARD
- B. MIN. – .042" – COVING
- ~~C. MIN. – .043" – CHEM SURF~~

II. CORE

- A. 3/4" PARTICLE BOARD AND BACKING SHEET

NO EXCEPTION TAKEN ☐ MAKE CORRECTIONS NOTED
☐ REJECTED ☐ SUBMIT SPECIFIED ITEM ☐ REVISE AND RESUBMIT

Checking is only for general conformance with the design concept of the project and general compliance with the information given in the contract documents. Any action shown is subject to the requirements of the plans and specifications. Contractor is responsible for: dimensions which shall be confirmed and correlated at the job site; fabrication processes and techniques of construction; coordination of his work with that of all other trades; and the satisfactory performance of his work.

CITY OF RIVERSIDE
PARK & RECREATION DEPARTMENT
DATE 3/24/92 BY RB

APPROVED
HEIMBERGER/HIRSCH & ASSOCIATES INC
DATE

ARCHITECTS: HEIMBERGER, HIRSCH AND ASSOC.
CONTRACTOR: AURORA MODULAR IND.

Certified Compliance®
These shop drawings fully meet the W.I.C. grade specified, except as they may have been modified by the plans and specifications.
S.D. 012483

Certified Compliance®
These shop drawings fully meet the W.I.C. grade specified, except as they may have been modified by the plans and specifications.
S.D. 012484

DAVID M. BERTINO MFG. CO.
1696 WEST MILL, UNITS 21, 22
COLTON, CALIFORNIA 92324
WIC NO. 406
CONT. NO. 520857
PH. 888 9122
FAX 381 5577

SHEET SD 1/5

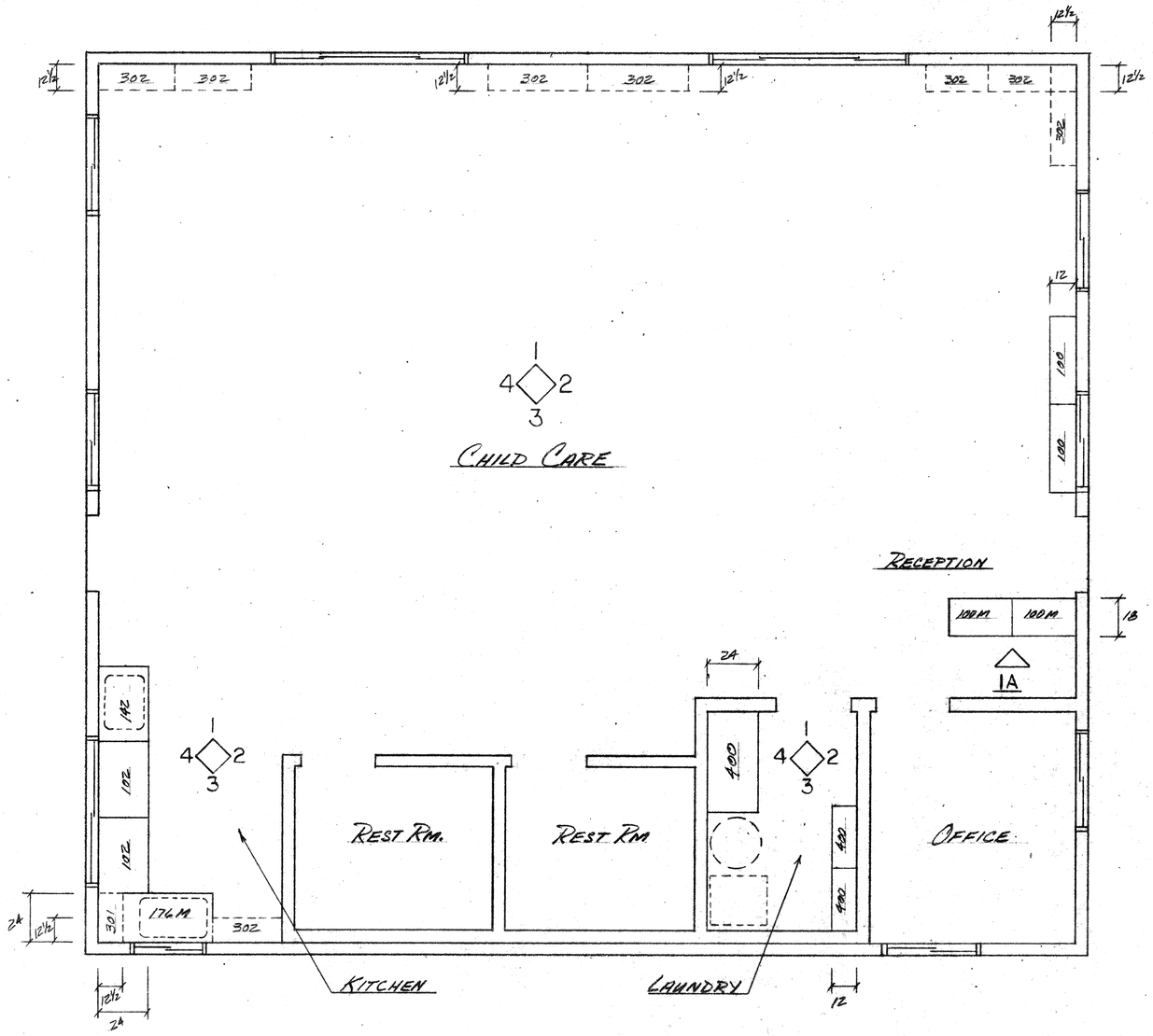

FLOOR PLAN

NO EXCEPTION TAKEN ☐ MAKE CORRECTIONS NOTED
☐ REVISE AND RESUBMIT
☐ REJECTED ☐ SUBMIT SPECIFIED ITEM

Checking is only for general conformance with the design concept of the project and general compliance with the information given in the contract documents. Any action shown is subject to the requirements of the plans and specifications. Contractor is responsible for: dimensions which shall be confirmed and correlated at the job site; fabrication processes and techniques of construction; coordination of his work with that of all other trades; and the satisfactory performance of his work.

CITY OF RIVERSIDE
PARK & RECREATION DEPARTMENT
DATE 3/24/92 BY

REVISIONS	ARCHITECT (91027) HEIMBERGER, HIRSCH AND ASSOC.	BRYANT PARK DAY CARE FACILITY	David M. Bertino MANUFACTURING	DAVID M. BERTINO MFG. 1696 W. MILL ST. - #21 COLTON, CA. 92324 (714) 888-9122 FAX 381-5577 CONTR. LIC. 520857 WIC LIC. 406 JOB# 4194	DATE 1-09-92
△	CONTRACTOR (3324) AURORA MODULAR IND.	CITY OF RIVERSIDE PARK AND RECREATION			DRWN. G.R.C.
△					SCALE 1/4" = 1'-0"
△					SHEET SD 2/5
△					

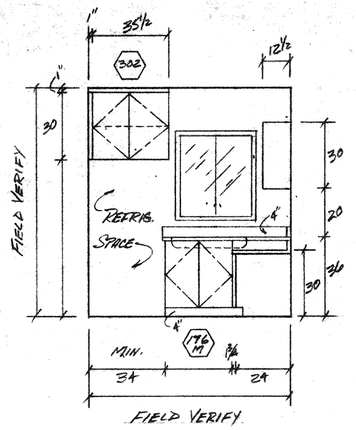

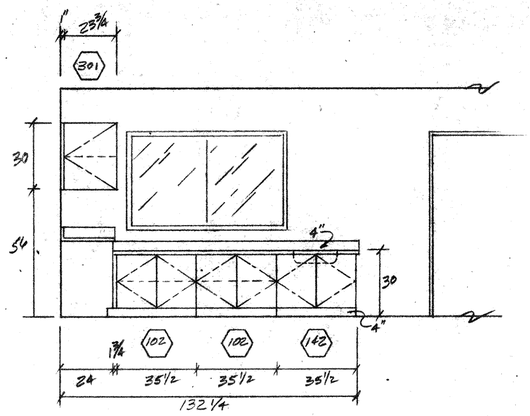

KITCHEN 3 4

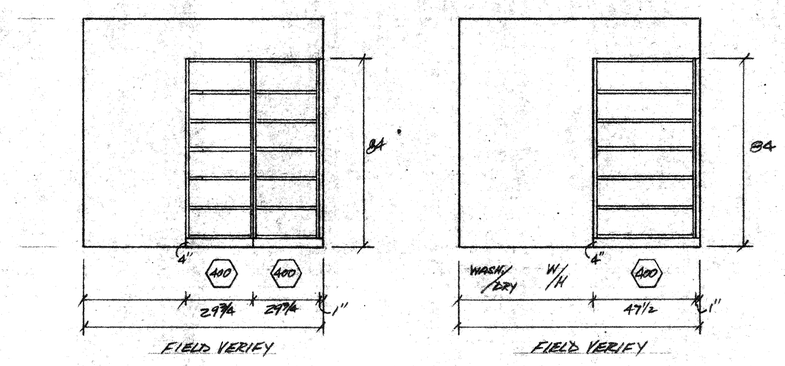

NOTE: MATL.- WHITE MELAMINE W/PVC EDGING

LAUNDRY 2 4

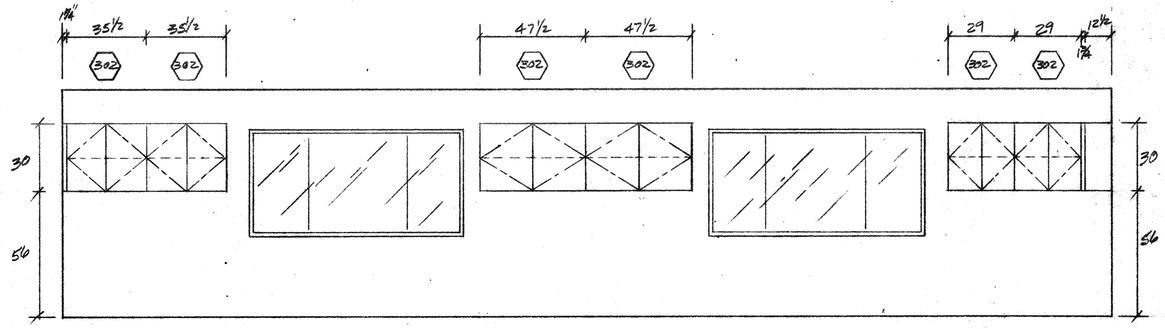

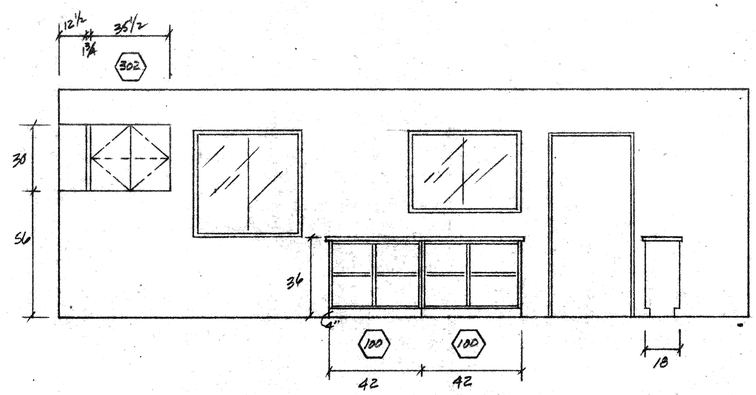

CHILD CARE 1 2

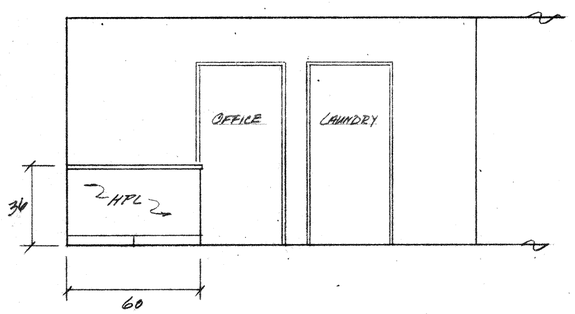

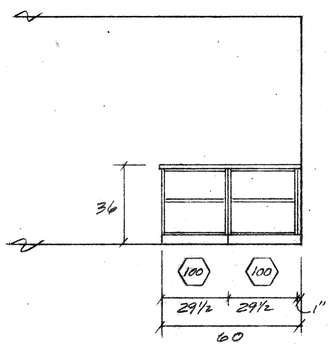

NO EXCEPTION TAKEN ☐ MAKE CORRECTIONS NOTED
☐ REJECTED ☐ SUBMIT SPECIFIED ITEM ☐ REVISE AND RESUBMIT

Checking is only for general conformance with the design concept of the project and general compliance with the information given in the contract documents. Any action shown is subject to the requirements of the plans and specifications. Contractor is responsible for: dimensions which shall be confirmed and correlated at the job site; fabrication processes and techniques of construction; coordination of his work with that of all other trades; and the satisfactory performance of his work.

CITY OF RIVERSIDE
PARK & RECREATION DEPARTMENT
DATE 3/24/92 BY

CHILD CARE/RECEP. 3 1A

REVISIONS	ARCHITECT (91027) HEIMBERGER, HIRSCH AND ASSOC.	INTERIOR ELEVATIONS BRYANT PARK DAY CARE FACILITY CITY OF RIVERSIDE PARK AND RECREATION	David M. Bertino MANUFACTURING	DAVID M. BERTINO MFG. 1696 W. MILL ST. - #21 COLTON, CA. 92324 (714) 888-9122 FAX 381-5577 CONTR. LIC. 520657 WIC LIC. 406 JOB # 4194	DATE 1-10-92
△	CONTRACTOR (3324) AURORA MODULAR IND.				DRWN. G.R.C.
△					SCALE ¼" = 1'-0"
△					SHEET SD 3/5
△					

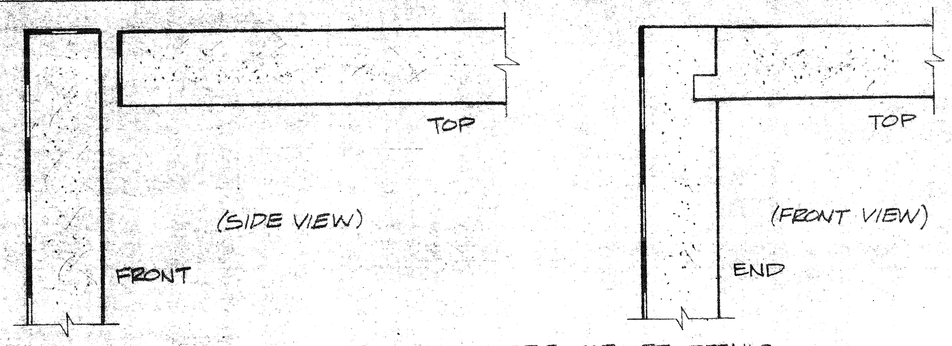

TALL OR UPPER CABINET DETAILS

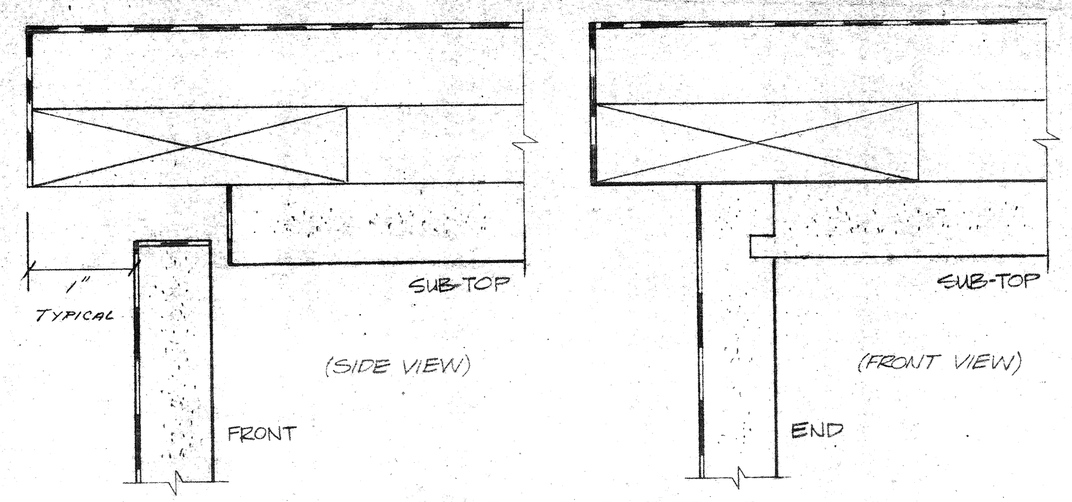

BASE CABINET DETAILS

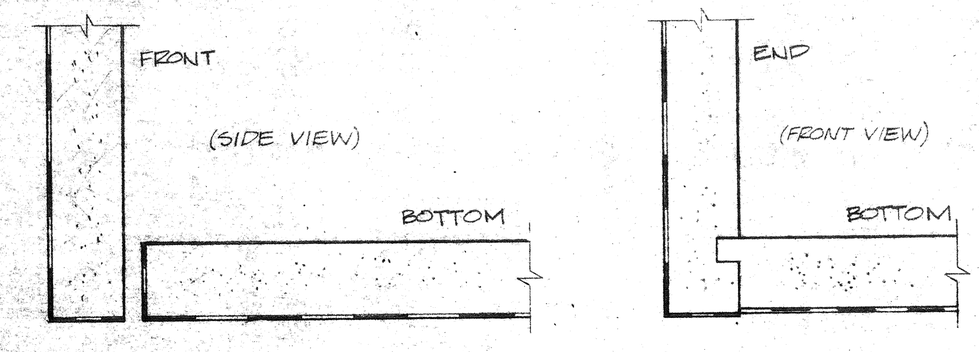

UPPER CABINET DETAILS

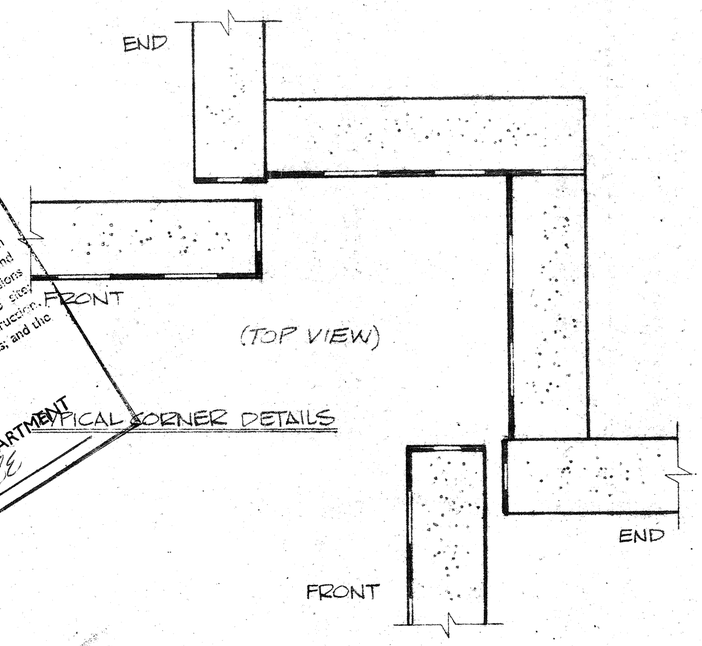

TYPICAL CORNER DETAILS

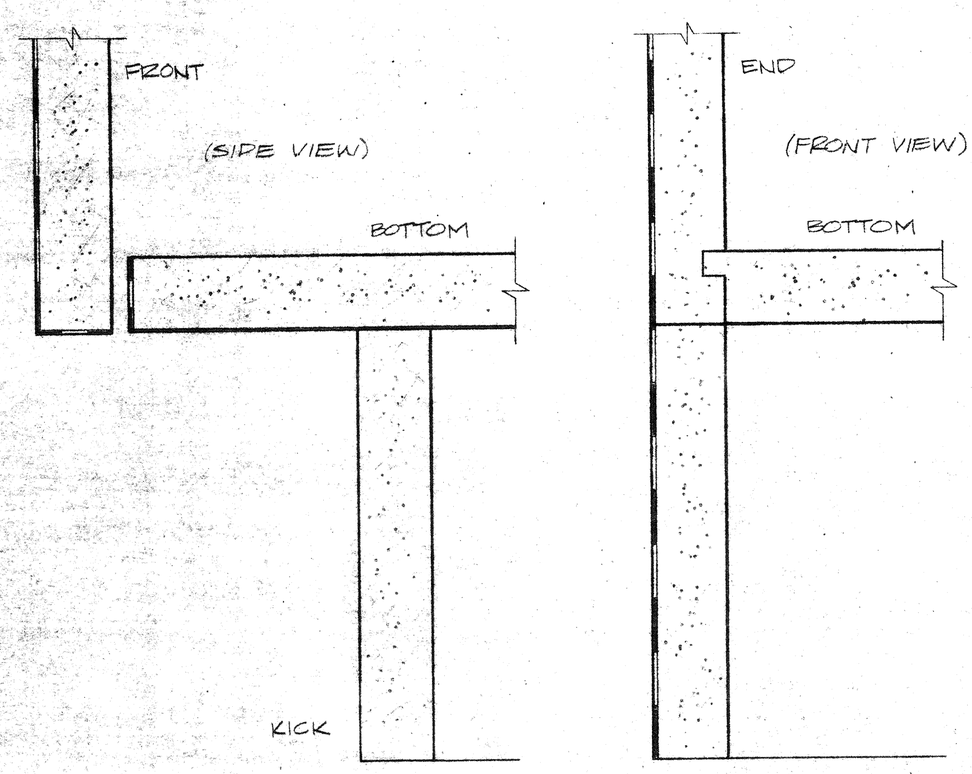

TALL OR BASE CABINET DETAILS

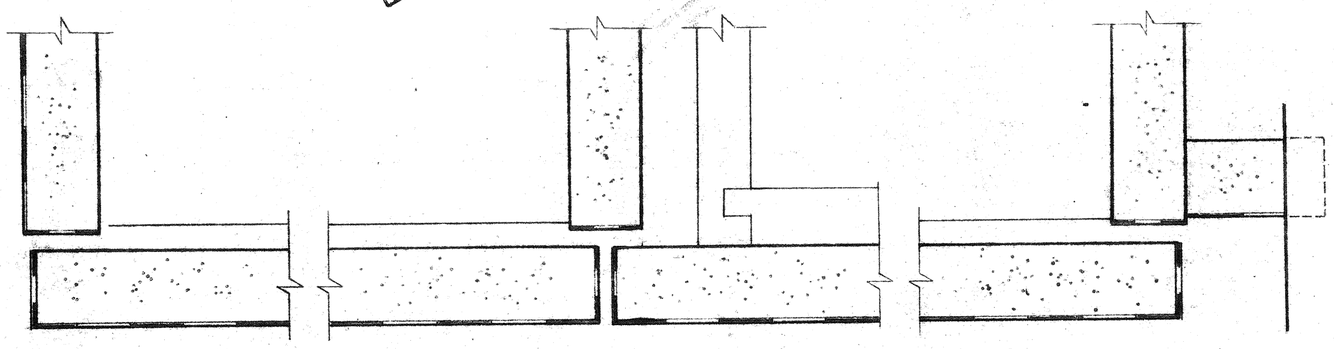

TYPICAL (TOP VIEW) DETAILS

☒ NO EXCEPTION TAKEN ☐ MAKE CORRECTIONS NOTED
☐ REJECTED ☐ SUBMIT SPECIFIED ITEM ☐ REVISE AND RESUBMIT

Checking is only for general conformance with the design concept of the project and general compliance with the information given in the contract documents. Any action shown is subject to the requirements of the plans and specifications. Contractor is responsible for dimensions which shall be confirmed and correlated at the job site; fabrication processes and techniques of construction; and the coordination of his work with that of all other trades; and the satisfactory performance of his work.

CITY OF RIVERSIDE
PARK & RECREATION DEPARTMENT
DATE 3/24/92 BY RE

SCALE: FULL SIZE

DAVID M. BERTINO MFG. CO. WIC NO. 406 CONT. NO. 520857	1696 WEST MILL, UNITS 21, 22 COLTON, CA 92324 714/ 888-9122	NO. 4194 SHEET SD4/5

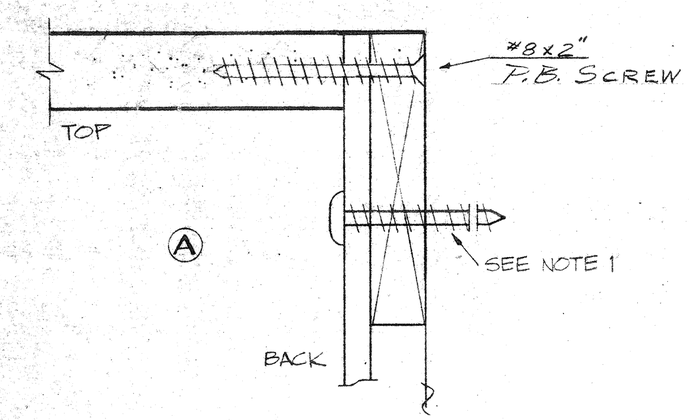

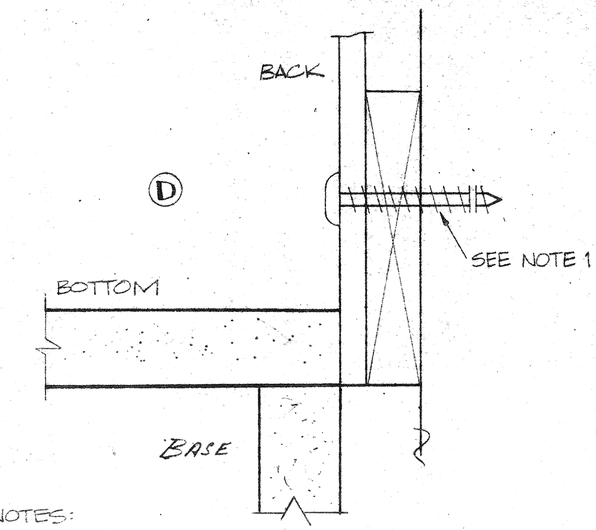

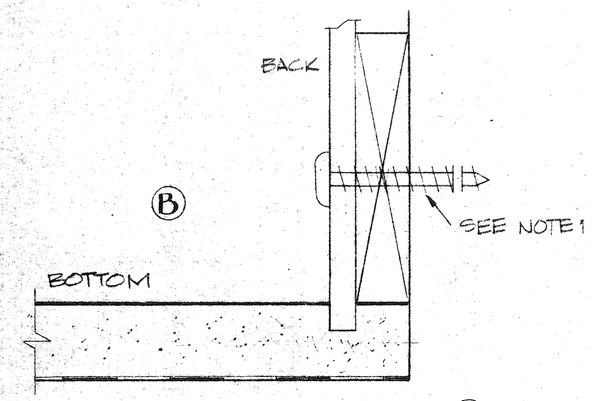

NOTES:

1. #14 x 3" TRUSS HEAD SHEET METAL SCREWS AT 32" O.C. MAXIMUM, WITH 4 SCREWS PER CASE MINIMUM INTO STUDS, BACKING OR MASONRY.
2. #10 x 1½" FLAT HEAD WOOD SCREW.
3. ALL VIEWS ARE SIDE VIEWS.

= PLASTIC LAMINATE

= CABINET LINER (MELAMINE)

= PARTICLE BOARD

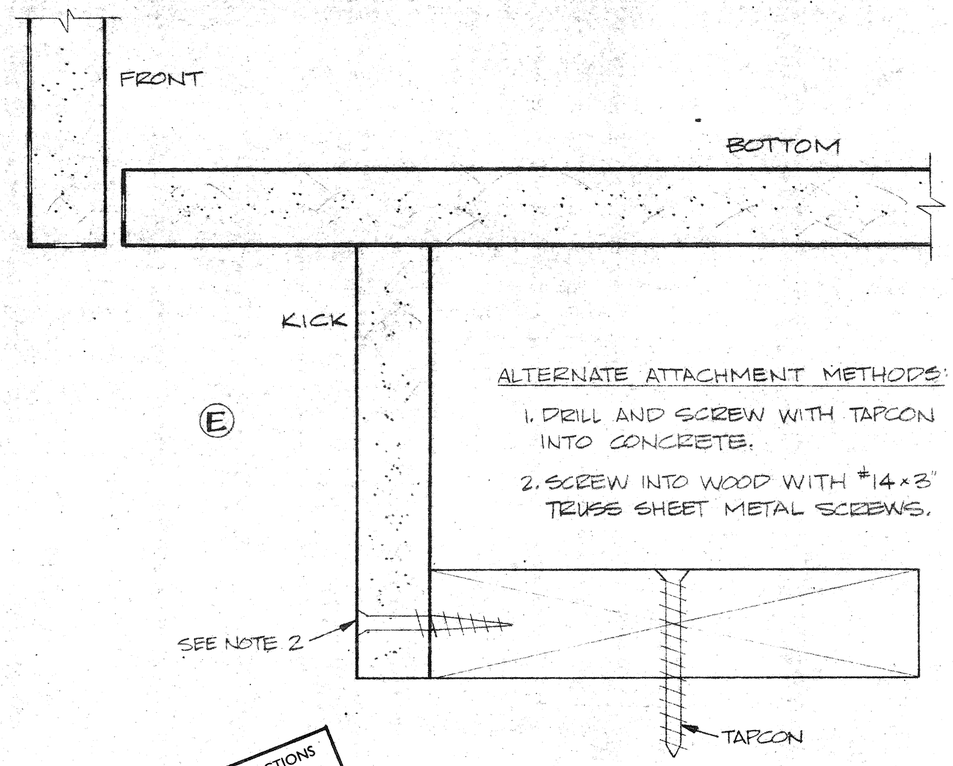

ALTERNATE ATTACHMENT METHODS:

1. DRILL AND SCREW WITH TAPCON INTO CONCRETE.
2. SCREW INTO WOOD WITH #14 x 3" TRUSS SHEET METAL SCREWS.

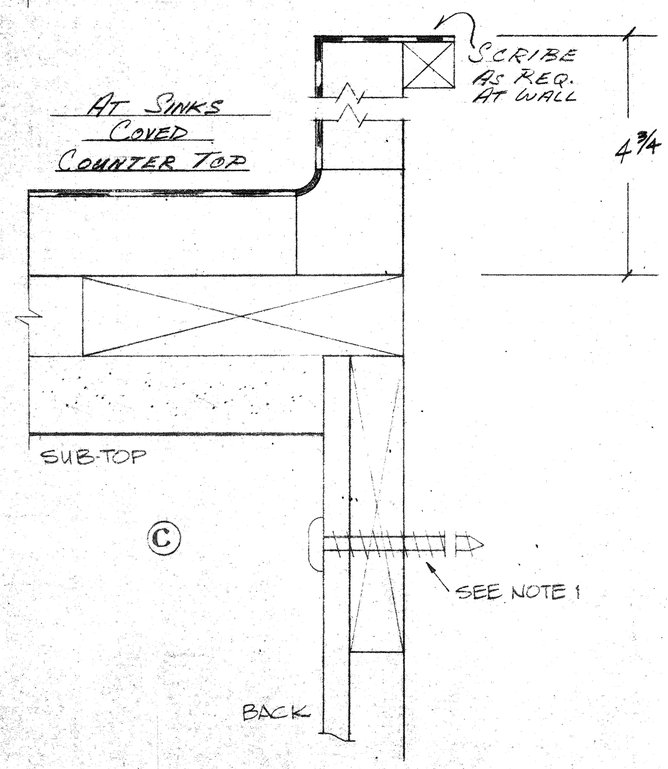

NO EXCEPTION TAKEN ☐ MAKE CORRECTIONS NOTED
☐ REJECTED ☐ SUBMIT SPECIFIED ITEM ☐ REVISE AND RESUBMIT

Checking is only for general conformance with the design concept of the project and general compliance with the information given in the contract documents. Any action shown is subject to the requirements of the plans and specifications. Contractor is responsible for dimensions which shall be confirmed and correlated at the job site; fabrication processes and techniques of construction; coordination of his work with that of all other trades; and the satisfactory performance of his work.

CITY OF RIVERSIDE
PARK & RECREATION DEPARTMENT
DATE 3/24/92 BY

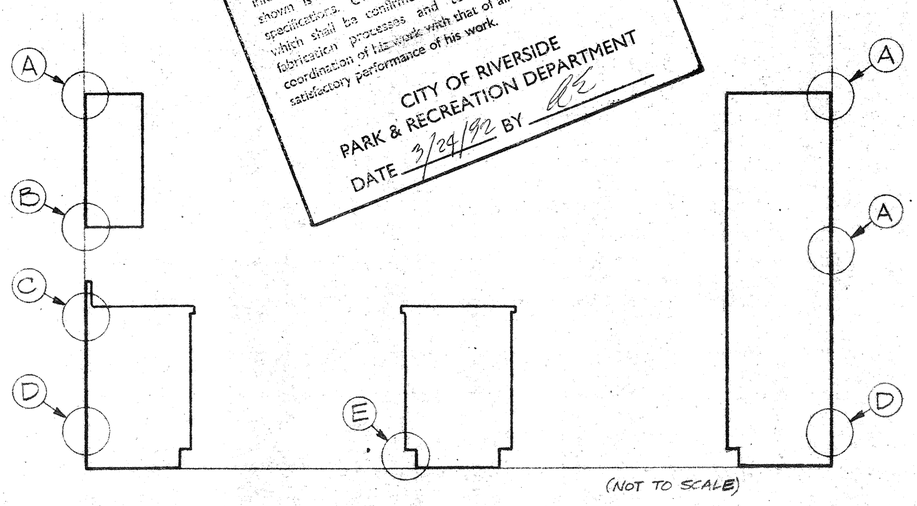

(NOT TO SCALE)

TYPICAL CABINET ATTACHMENT LOCATIONS

SCALE: FULL SIZE

DAVID M. BERTINO MFG. CO. WIC NO. 406 CONT. NO. 520857	1696 WEST MILL, UNITS 21, 22 COLTON, CA 92324 714/ 888-9122	NO. 4194 SHEET SD5/5