NOTES

1. INTERCEPT & EXTEND CONDUITS TO NEW PULL BOX. REWIRE AS REQUIRED. INSTALL GROUND ROD IN EACH PULL BOX.
2. SAW CUT EXISTING WALK OR AC PAVING, INTERCEPT & EXTEND CONDUITS TO NEW PULL BOX & INSTALL NEW CONCRETE WALK TO MATCH EXISTING. REWIRE AS REQUIRED.
3. SAW CUT CONCRETE, INSTALL NEW CONDUIT FOR CIRCUIT RUN TO WEST SIDE OF PARK, L.B. INTO BUILDING. PATCH CONCRETE & BALLFIELD AFTER INSTALLTION OF CONDUIT TO MATCH SURROUNDINGS.
4. ALL EXIST. UTILITY LOCATIONS (ELEC., DRAIN, SEWER, WATER, ETC.) ARE APPROXIMATE. VERIFY EXACT LOCATIONS IN FIELD AND WITH PERSONNEL OF CITY OF RIVERSIDE BEFORE EXCAVATION, CUTTING OR SAWING OF CONCRETE, ETC. NOTE APPLIES TO ENTIRE SITE.

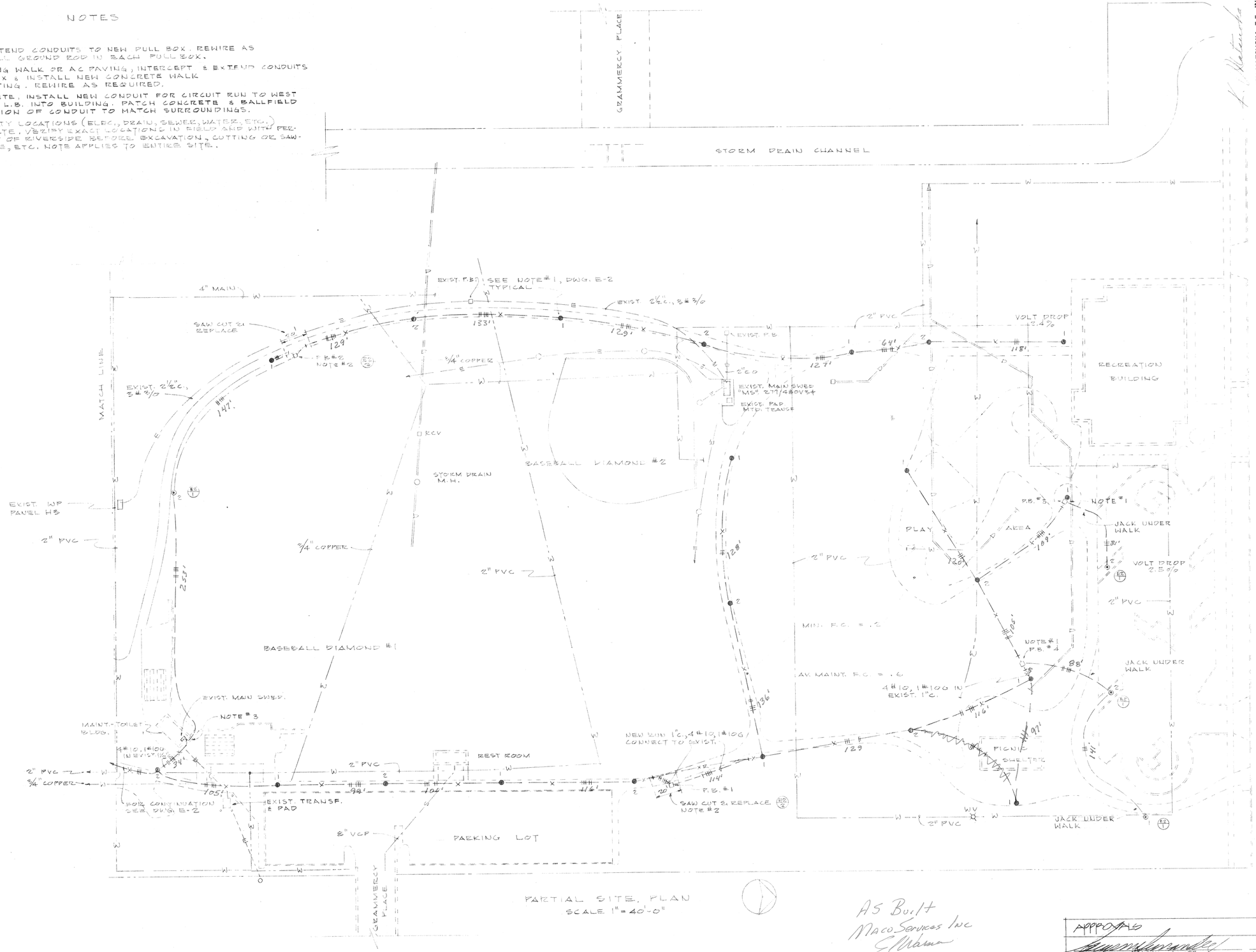

PARTIAL SITE PLAN
SCALE 1" = 40'-0"

AS Built
Maco Services Inc
E. Warren
12/2/83

APPROVALS

PARK AND RECREATION DIRECTOR	DATE
PARK SUPERINTENDENT	DATE
Donald L. Deese	4/22/83
RECREATION SUPERINTENDENT	DATE
Robert L. Johnson	4/22/83
PARK PROJECTS COORDINATOR	DATE

KEN MATSUOKA, E.E., INC.
479 N. Tustin Ave. Suite 10
ORANGE, CALIFORNIA
(714) 633-7761 CA. Reg. #E-2617

SECURITY LIGHTING REFURBISHMENT
BRYANT PARK
RIVERSIDE CALIFORNIA

city of riverside
park & recreation
department
(714) 787-7223
3900 MAIN ST RIVERSIDE, CALIFORNIA 92522

revisions	by

date	5-1-83
design	K.M.
drawn	D.N.M.
check	
acc't. no.	
SHEET	1 of 3

P-0210

TABLE OF SYMBOLS

SYMBOL	DESCRIPTION
●	EXISTING POLE WITH NEW 100W HPS FIXTURE, NOTE #1
○	EXISTING BASE WITH NEW POLE & 100W HPS FIXTURE
⊙	NEW FIXTURE, POLE & BASE PER DETAIL E2/1
□	PRECAST CONCRETE PULL BOX, BROOKS # 5T, EXTENSION & GROUND ROD.
—— ##	1"C., 2#10, 1#10G THW, U.G. CONDUIT RUN
—— ####	1"C., 4#10, 1#10G THW " " "
-X-## -	2#10, 1#10G THW IN EXIST. 1"C.
-X-####	4#10, 1#10G THW IN EXIST. 1"C.
—— ——	UNDERGROUND CONDUIT RUNS AS NOTED
—X— —	EXIST. U.G. CONDUIT RUN
—XR—	EXIST. U.G. CONDUIT RUN TO BE REMOVED OR ABANDONED
—I —X—	CONNECTION TO EXIST. 1"C., & REPULL WIRES - NOTE #3 & DETAIL E2/2
—E—	EXIST. U.G. ELEC. POWER RUNS. SEE NOTE #4, DWG. E-1
—W—	EXIST. WATER LINES " "
—S—	EXIST. SEWER LINES " "
═D═	EXIST. DRAIN LINES. " "
X	EXISTING

NOTES

1. REMOVE EXISTING FIXTURE & TURN OVER TO CITY OF RIVERSIDE. INSTALL NEW 100W HPS FIXTURE ON EXISTING STANDARD & CONNECT TO NEW FEEDERS. FIXTURE SHALL BE MWC # HB-100LU-240 BZ W/ 100 HPS LAMP & TENON TO FIT EXISTING STANDARD.
2. REMOVE EXISTING DAMAGED POLE; REPLACE WITH POLE FURNISHED BY CITY OF RIVERSIDE AND NEW 100 HPS FIXTURE PER NOTE #1.
3. INTERCEPT EXISTING CONDUIT AND EXTEND AS SHOWN. REPULL WITH REQUIRED CONDUCTORS.
4. INTERCEPT OR EXTEND EXISTING CONDUITS TO NEW PULL BOX. REWIRE AS REQUIRED.
5. INSTALL PHOTOCELL ON ROOF AT +12" FACING NORTH. FLASH & COUNTERFLASH AT ROOF FOR COMPLETELY WEATHERTIGHT PENETRATION.
6. FURNISH & INSTALL ADJACENT TO EXISTING CONTACTOR, A ELECT. HELD 30/2 LIGHTING CONTACTOR AND CONNECT TO PHOTOCELL AND NEW FEEDER #2 FOR NIGHT LIGHTING CIRCUIT. CONTACTOR SHALL BE SQUARE D CLASS 8903 # SMG-1, OR EQUAL.
7. FURNISH & INSTALL A 30/2 CIRCUIT BREAKER COMPLETE WITH ALL ACCESSORIES IN EXISTING SPACES. FAULT CURRENT RATING AS REQUIRED.
8. GROUND RODS SHALL BE 3/4"ϕ X 10'-0" COPPERWELD AND INSTALLED IN EACH PULLBOX.

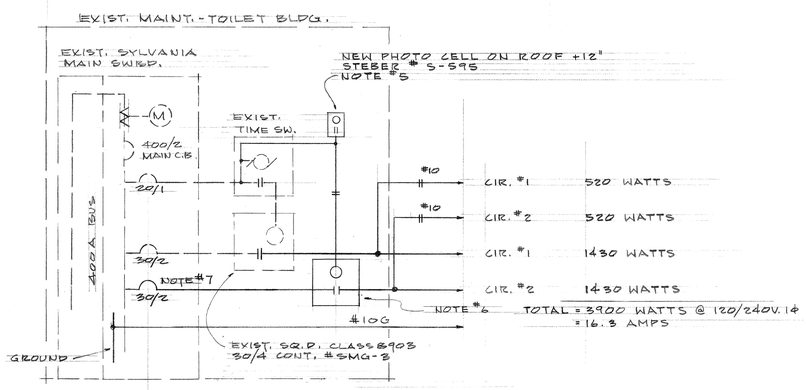

SINGLE LINE DIAGRAM

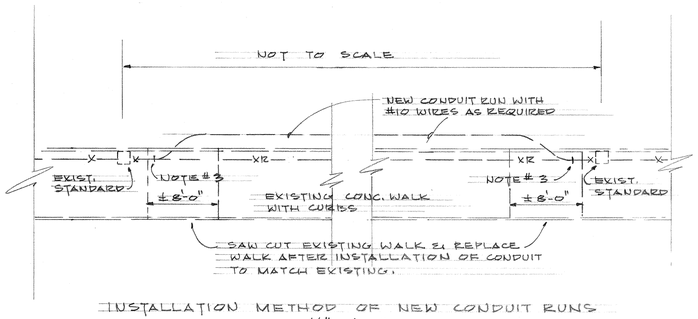

INSTALLATION METHOD OF NEW CONDUIT RUNS
SCALE 1/8" = 1'-0"

E2/2

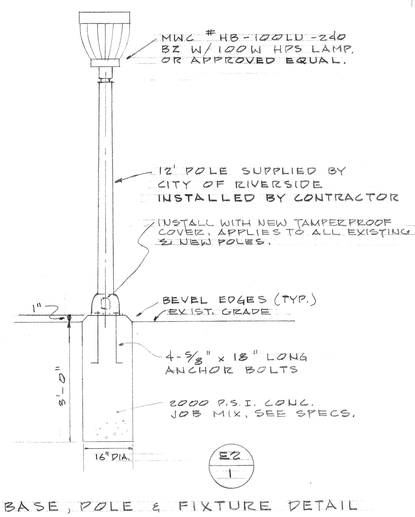

BASE, POLE & FIXTURE DETAIL

E2/1

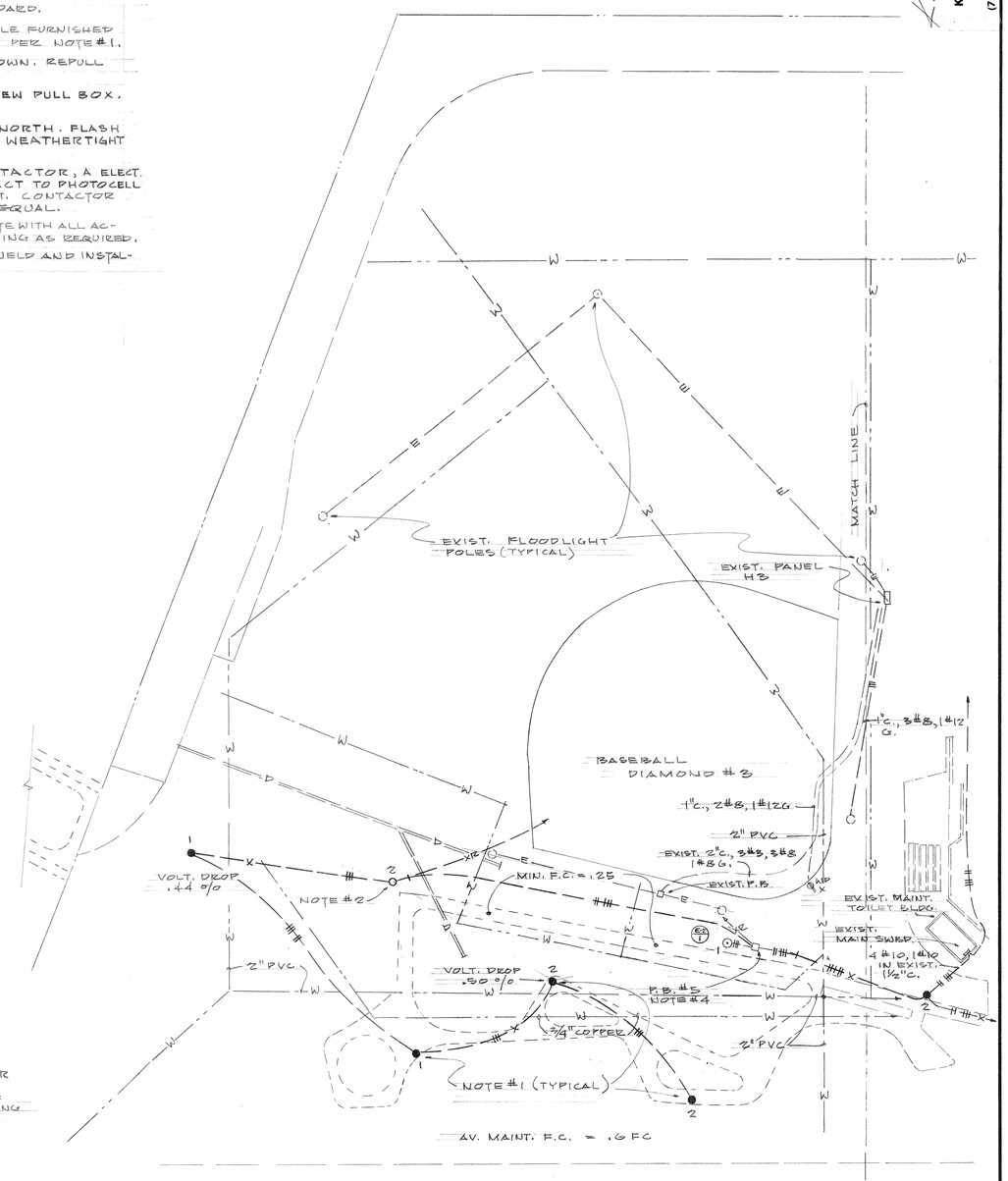

PARTIAL PLOT PLAN
SCALE 1" = 40'-0"

APPROVED

PARK AND RECREATION DIRECTOR	DATE
PARK SUPERINTENDENT	DATE
RECREATION SUPERINTENDENT	DATE 4/22/83
PARK PROJECTS COORDINATOR	DATE 4/22/83

KEN MATSUOKA, E.E., INC.
479 N. Tustin Ave. Suite 10
ORANGE, CALIFORNIA
(714) 633-7721 CA. Reg. #E 2617

SECURITY LIGHTING REFURBISHMENT
BRYANT PARK
RIVERSIDE CALIFORNIA

city of riverside
park & recreation department
(714) 787-7223
3900 MAIN ST RIVERSIDE, CALIFORNIA 92522

revisions	by

date	5-1-83
design	K.M.
drawn	K.M.
check	
acc't. no.	
SHEET	2 of 2

P-0210

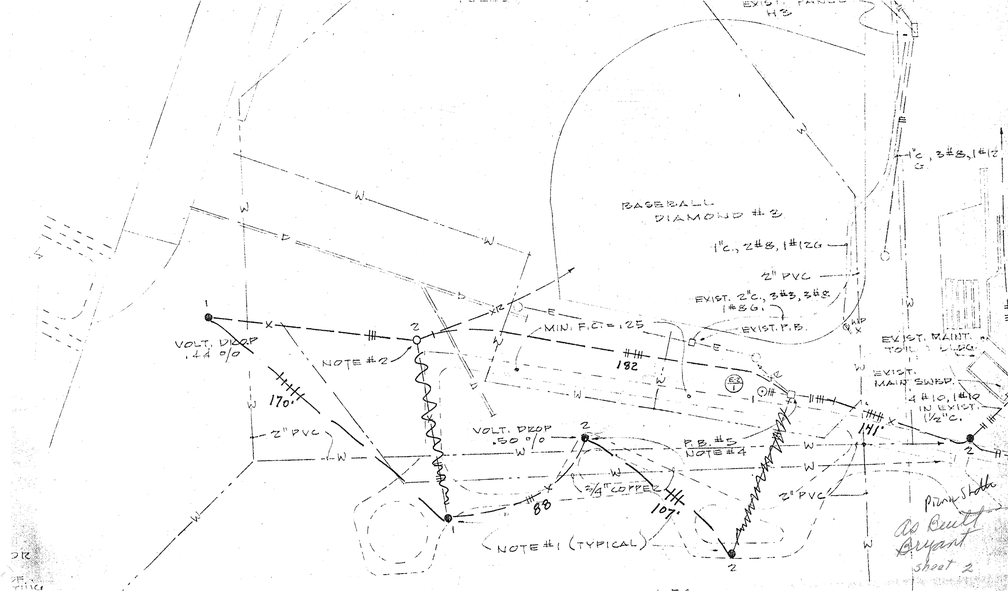
BASEBALL
DIAMOND #2
1"C., 2#8, 1#12G
2" PVC
EXIST. 2"C., 3#3, 3#8, 1#8G.
EXIST. P.B.
MIN. F.C. = .25
VOLT. DROP .44 %
NOTE #2
182
170'
2" PVC
VOLT. DROP .50 %
P.B. #5
NOTE #4
3/4" COPPER
80
107'
2" PVC
NOTE #1 (TYPICAL)
EXIST. MAIN SWBD.
4#10, 1#10 IN EXIST. 1½"C.
141'
1"C., 3#8, 1#12
As Built
Bryant
Sheet 2

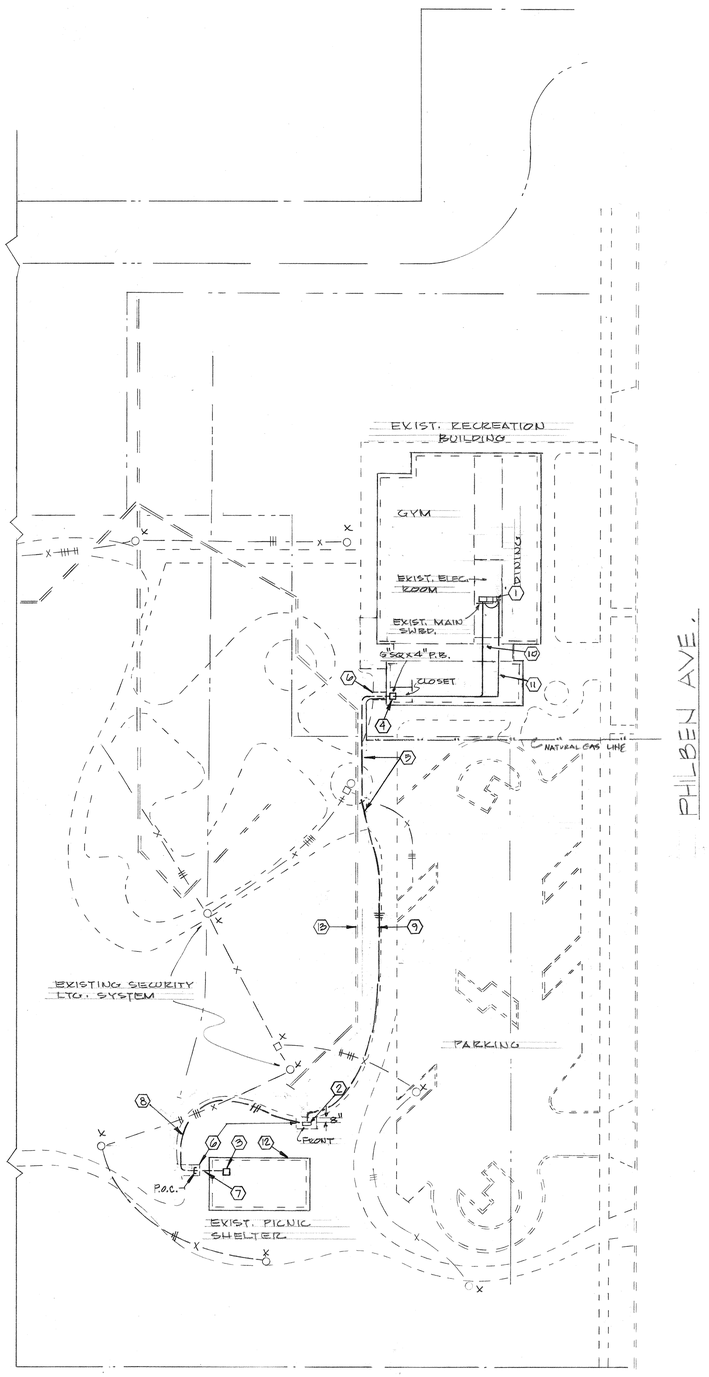

PARTIAL SITE PLAN — SCALE 1" = 40'-0" — A1

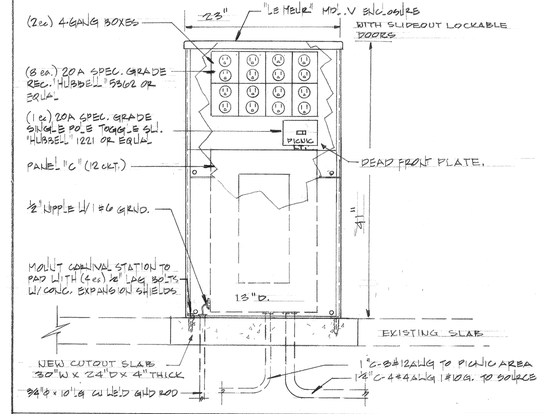

CARNIVAL OUTLET STATION — SCALE N.T.S. — 1S

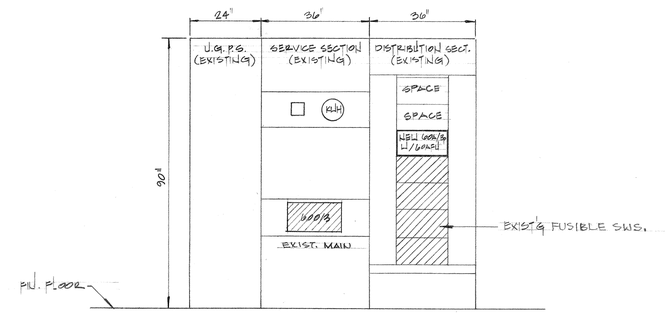

MAIN SWITCHGEAR ELEVATION — SCALE N.T.S. — 1S

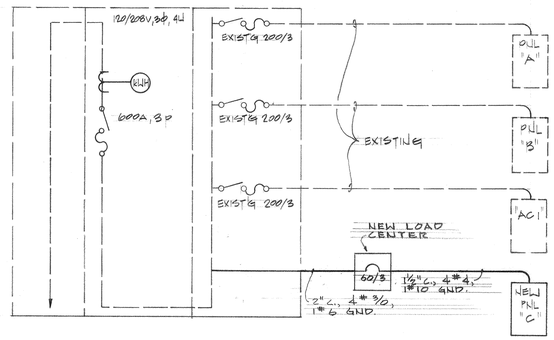

SINGLE LINE DIAGRAM — SCALE NONE — 1S

VOLTS 120/208 — PHASE 3 — WIRE 4 — PANEL "C" — LOCATION — FEEDER — MAIN BKR: 50/3 MAIN C.B. — 100 A. BUSSING — ENTER CAB'T. AT CABINET MTG.

LOCATION	WATTAGE ϕA	WATTAGE ϕB	WATTAGE ϕC	LTG	REC	MIS	CIR	BKR			BKR	CIR	MIS	REC	LTG	WATTAGE ϕA	WATTAGE ϕB	WATTAGE ϕC	LOCATION
CARNIVAL STATION	1600						1	20/1			20/1	2				1600			CARNIVAL STATION
		1600					3					4					1600		
			1600				5					6						1600	
	1600						7					8							SPARE
PICNIC SHELTER		680					9					10							SPARE
CARNIVAL STATION			1600				11					12							SPARE

ϕA = 4800W — ϕB = 3880W — ϕC = 4800W

TOTAL CONNECTED LOAD: 13,480 + 170(L.C.L.) = 13,650W OR 38.0AMPS

L.C.L.: (680 · 0.25(L.C.)) = 170W

PANEL SCHEDULE (PNL "C") — SCALE NONE — 1S

1. EXISTING MAIN SWITCHBOARD (VERIFY LOCATION) INSTALL NEW 60AMP, 3 POLE SWITCH, W/ 60 AMP FUSE (CURRENT LIMITING) EXTEND 1 1/2" CONDUIT W/ 4 #4 AWG CONDUCTORS TYPE THW, AND 1 #10 AWG TYPE THW, TO ABOVE CEILING.
2. CARNIVAL OUTLET STATION (SEE DETAIL "B") ROLLER TO BE SUPPLIED FROM UNDERGROUND.
3. EXISTING ELECTRICAL TERMINATION BOX ON TOP OF SUPPORT COLUMN. (SEE DETAIL "H")
4. NEW JUNCTION BOX, MOUNT ON WALL +12" A.F.F. 1 1/2" C. TO PENETRATE FLOOR AND UNDER BLDG. & WALK (NOTE #6) BOX T/B LOCATED @ SOUTH/EAST CORNER OF STORAGE RM. (VERIFY)
5. JACK CONDUIT UNDER WALK WAY AS SHOWN (VERIFY DEPTH IN FIELD)
6. SAWCUT EXISTING WALK AND/OR SLAB AS REQUIRED. (NOTE: SAWCUT SLAB @ PICNIC AREA AS NEC. TO STUBOUT) REPLACE WITH CONCRETE TO MATCH EXISTING.
7. EXISTING CONDUIT STUB UNDER GROUND. VERIFY LOCATION IN FIELD.
8. NEW 1" C-3#12 AWG CONNECT TO EXISTING 1" C.O., PULL CONDUCTORS TO TERM. BOX (NOTE #3) NEW 1" C. TO RUN UNDERGROUND (PVC SCHEDULE 40)
9. NEW 1 1/2" C-4#4/1#10 AWG FROM MAIN TO CARNIVAL STATION. CONDUIT T/B ROUTED UNDERGND ALONG SIDE (NOT ON TOP) DRAIN DUCT AS SHOWN.
10. 1 1/2" C-4#4/1#10 AWG FROM MAIN SWBRD. ROUTE CONDUIT ABOVE SUSP. CLG. AND ALONG EAST WALL AS SHOWN. ROUTE CONDUIT DN. SOUTH WALL TO J-BOX.
11. 1 1/2" C-4#4/1#10 AWG (SEE NOTE #10) ROUTED ABV. SUSP. CLG., CONDUIT T/B SUPPORTED BY 12 GA. CLG. SUPPORT WIRE AS REQUIRED.
12. PICNIC SHELTER (SEE DETAIL "H")
13. EXISTING DRAIN DUCT

DESIGN NOTES — SCALE NONE — 1S

SYMBOL	DESCRIPTION
GND.	GROUND
UGPS	UNDER GROUND PULL SECTION
F.U.	FUSE (AFU) AMP FUSE
AFF	ABOVE FINISHED FLOOR
T/B	TO BE
$	SINGLE POLE TOGGLE SWITCH (AS DESCRIBED ON PLANS.)
	FUSE
	MAIN DISCONNECT SWITCH
—X—	EXIST'G UNDERGND CONDUIT AND CONDUCTORS
—#—	NEW UNDERGND CONDUIT AND CONDUCTORS.

SYMBOL LIST — SCALE NONE — 1S

NOTE: THE FLUORESCENT FIXTURES IN THE PICNIC SHELTER SHALL BE "KENALL" #7280 W/ 7200A ADAPTER FOR SURFACE MOUNTING. EACH FIXTURE SHALL BE PROVIDED W/(2) TWO F40T12/RS LAMPS. FIXTURES SHALL BE MTD. AS SHOWN ON PLAN BELOW. NO SUBSTITUTES WILL BE ACCEPTED UNLESS APPROVED PRIOR TO INSTALLATION.

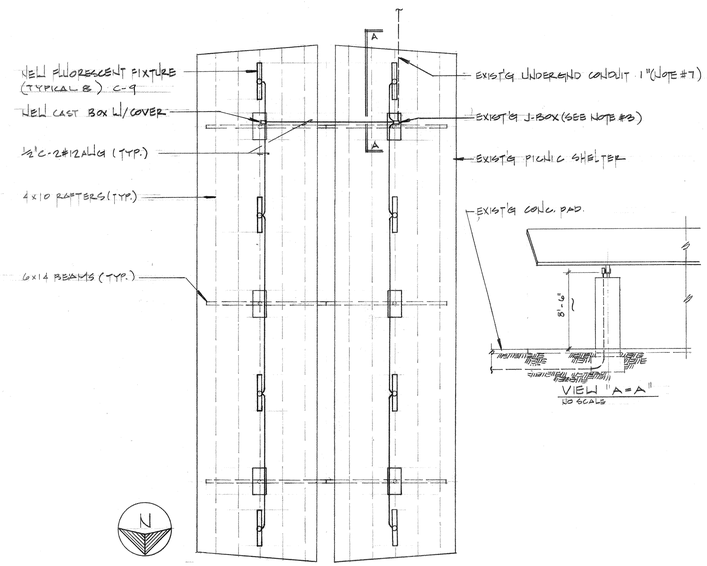

PICNIC SHELTER LIGHTING PLAN — SCALE 1/8" = 1'-0" — H

BRYANT PARK PICNIC AREA
RIVERSIDE, CALIFORNIA

KEN MATSUOKA, E. E.
479 N. Tustin Ave., Suite 11
ORANGE, CALIFORNIA
(714) 633-7721 CA. Reg. #E-2617

city of riverside
park & recreation
department
(714) 787-7923
3900 MAIN ST RIVERSIDE, CALIFORNIA 92522

revisions	by

date	9-23-83
design	CERRER
drawn	CERRER
check	K.M.
acc't. no.	
SHEET	E-3 of 3

"AS-BUILT"

As Built
GYM
EXIST. ELEC. ROOM
EXIST. MAIN SWBD.
separate Load Center
5"SQ x 4" P.B.
CLOSET
Natural Gas Line
PHILBEN AVE.
PARKING
FRONT
3"
P.O.C.
EXIST. PICNIC SHELTER
Picnic Shelter
Bryant
as Built
N

NOTES

1. INTERCEPT & EXTEND CONDUITS TO NEW PULL BOX. REWIRE AS REQUIRED.
2. SAW CUT EXISTING WALK OR AC PAVING, INTERCEPT & EXTEND CONDUITS TO NEW PULL BOX & INSTALL NEW CONCRETE WALK OR AC PAVING TO MATCH EXISTING. REWIRE AS REQUIRED.
3. SAW CUT CONCRETE. INSTALL NEW CONDUIT FOR CIRCUIT RUN TO WEST SIDE OF PARK, L.B. INTO BUILDING. PATCH CONCRETE & BALLFIELD AFTER INSTALLTION OF CONDUIT TO MATCH SURROUNDINGS.

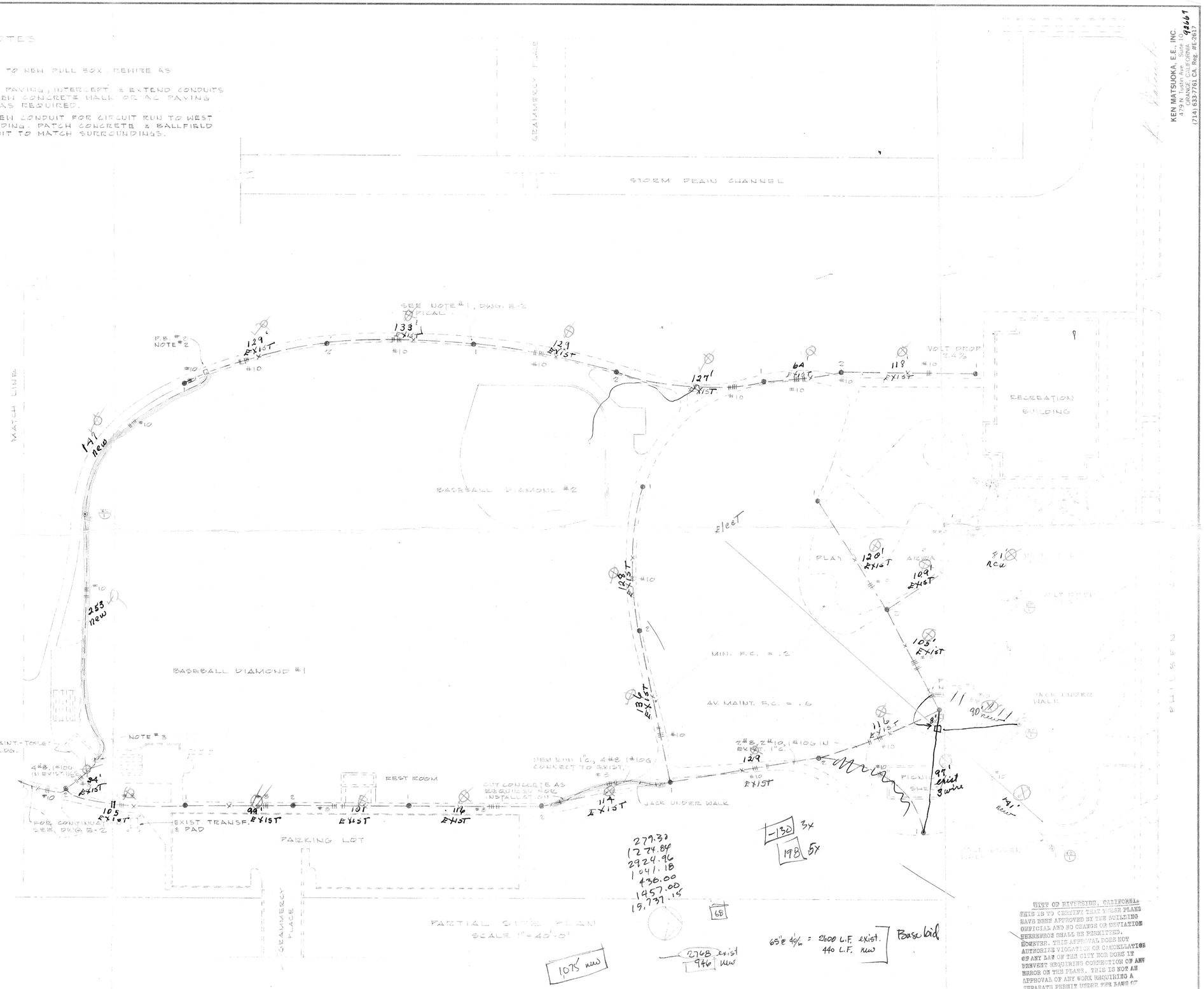

KEN MATSUOKA, E.E., INC.
479 N. Tustin Ave. Suite 10
ORANGE, CALIFORNIA 92667
(714) 633-7761 CA. Reg. #E-2617

SECURITY LIGHTING PER INSTALLATION
BRYANT PARK
RIVERSIDE CALIFORNIA

CITY OF RIVERSIDE, CALIFORNIA
THIS IS TO CERTIFY THAT THESE PLANS HAVE BEEN APPROVED BY THE BUILDING OFFICIAL AND NO CHANGE OR DEVIATION THEREFROM SHALL BE PERMITTED. HOWEVER, THIS APPROVAL DOES NOT AUTHORIZE VIOLATION OR CANCELLATION OF ANY LAW OF THE CITY NOR DOES IT PREVENT REQUIRING CORRECTION OF ANY ERROR ON THE PLANS. THIS IS NOT AN APPROVAL OF ANY WORK REQUIRING A SEPARATE PERMIT UNDER THE LAWS OF THE CITY

city of riverside
park & recreation department
3900 MAIN ST RIVERSIDE CALIFORNIA 92522

revisions	by

date	
design	
drawn	
check	
acc't.no.	
SHEET	
1	of