Community Center Expansion
Bryant Park
for the
City of Riverside

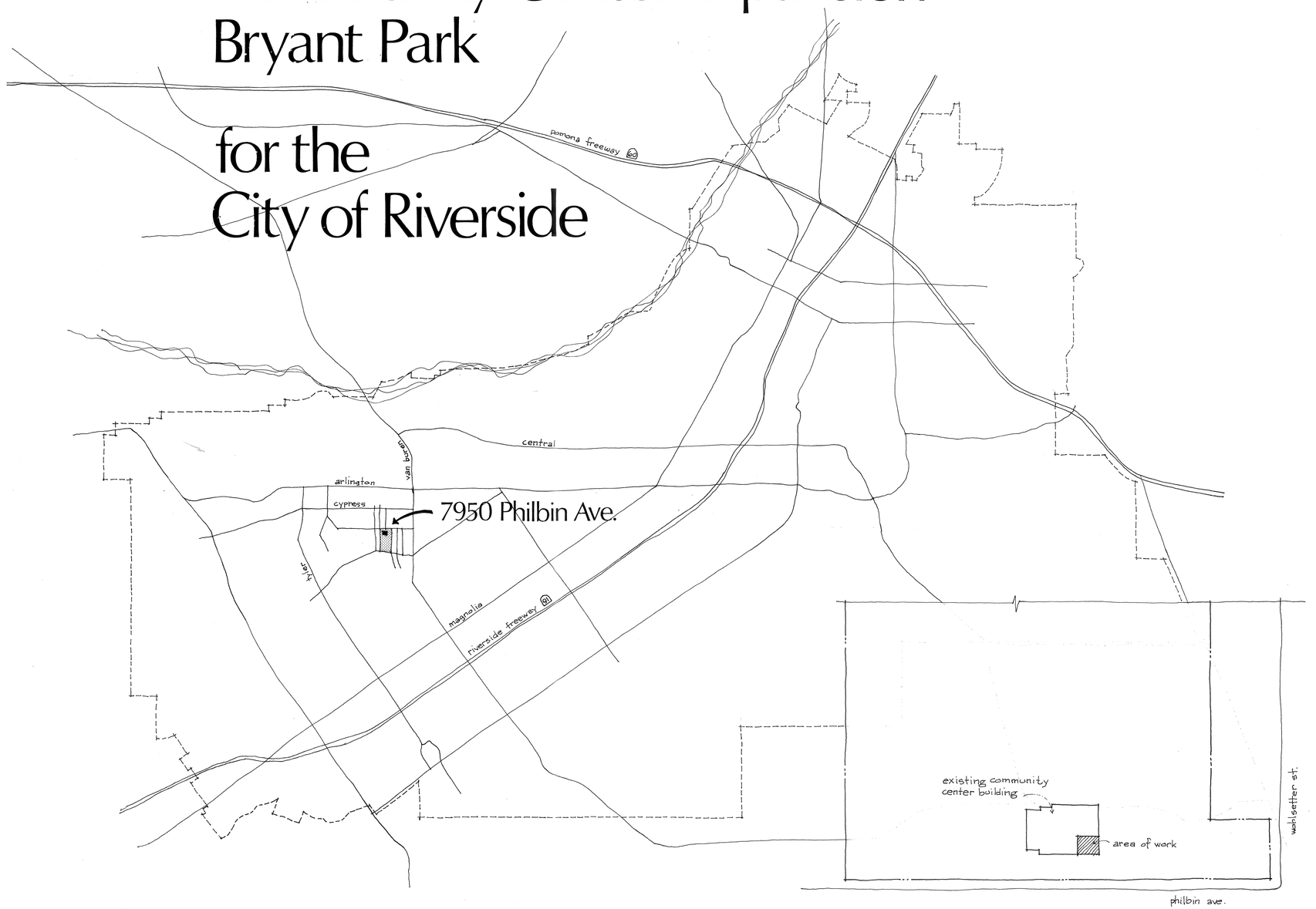

Site Plan scale 1"= 100'

Schedule of Drawings

1	FLOOR PLAN
	ROOF PLAN
2	DOOR and FINISH SCHEDULE
	REFLECTED CEILING PLAN
	SITE PLAN and DETAILS
3	INTERIOR ELEVATIONS
	EXTERIOR ELEVATIONS
	SECTIONS
4	DETAILS
S-1	GENERAL NOTE
	TYPICAL DETAILS
S-2	FOUNDATION AND FLOOR PLAN
	ROOF FRAMING PLAN
S-3	SECTIONS AND DETAILS
P-1	PLUMBING
M-1	MERCHANICAL
E-1	SITE PLAN
	MISCELLANEOUS
E-2	LIGHTING PLAN
E-3	POWER & SIGNAL PLAN

Abbreviations

#	Pound or number
(E)	Existing
AC	Air conditioning or Asphaltic Conc.
AC.T.	Acoustic tile
AC. CLG.	Acoustic ceiling
ADJ	Adjustable
ALUM	Aluminum
ARCH	Architectural
BD	Board
BLDG	Building
BLK	Block
BLKG	Blocking
BM	Beam
BOT	Bottom
CAB	Cabinet
CAULKG	Caulking
C.B.	Catch Basin
CEM	Cement
C.I.	Cast Iron
C.J.	Control Joint or Construction Joint
C.L.	Chain Link
CLG	Ceiling
CLR	Clear
COL	Column
CONC	Concrete
CONN	Connection
CONT	Continuous
CORR	Corridor
CNTRSK	Countersunk
CNTR	Counter
CTR	Center
DBL	Double
DECK'G	Decking
DEPT	Department
D.F.	Drinking Fountain
DET'L	Detail
DIM	Dimension
DISP	Dispenser
DN	Down
DRWR	Drawer
DS	Downspout
DRWG	Drawing
E.	East
EA	Each
EDF	Electric Drinking Fountain
E.J.	Expansion Joint
EL/ELEV	Elevation
ELEC	Electrical
EMER	Emergency
ENCL	Enclosure
ELEC PNLBD	Electric Panelboard
EQ or =	Equal
EQPT.	Equipment
EXST'G	Existing
EXP.	Exposed
EXTR	Exterior
F.A.	Fire Alarm
F.D.	Floor Drain
FHWS	Flathead Wood Screens
FNDN	Foundation
F.E.	Fire Extinguisher
F.E.C.	Fire Extinguisher Cabinet
F.F.	Factory Finish or Finish Floor
F.G.	Finish Grade
FIN	Finish
FL	Floor
F.L.	Flow Line
FLASH'G	Flashing
FLUOR	Fluorescent
F/C	Face of Concrete
F/S	Face of Studs
FPRF	Fireproof
F.S.	Full Size
FT	Foot or Feet
FTG	Footing
FURR'G	Furring
GA	Gauge
GALV	Galvanized
G.B.	Grab Bar
G.I.	Galvanized Iron
GL	Glass
GND	Ground
G.W.B.	Gypsum Wallboard
H.C.	Hollow Core
HDWD	Hardwood
HDWR	Hardware
HI	High
HORIZ	Horizontal
HGT	Height
H.M.	Hollow Metal
I.D.	Inside Diameter (Dim.)
INSUL	Insulation
INTR	Interior
JAN	Janitor
JT	Joint
LAM. PL.	Laminated Plastic
LAV	Lavatory
LT	Light
MAX	Maximum
M.C.	Medicine Cabinet
MECH	Mechanical
MET	Metal
MFR	Manufacturer
MH	Manhole
MIN	Minimum
MIR	Mirror
MISC	Miscellaneous
M.L.	Metal Lath
M.O.	Masonry Opening
M.T.	Metal Trim
MTD	Mounted
MUL	Mullion
N.	North
N.I.C.	Not in Contract
NO.	Number
NOM	Nominal
N.T.S.	Not to Scale
OBS	Obscure
O.C.	On Center
O.D.	Outside Diameter (Dim.)
OFF	Office
OPP	Opposite
PART	Partition
PCP	Portland Cement Plaster
PL	Plate
P.L.	Property Line
PLST	Plaster
PLYWD	Plywood
P.P.	Power Pole
PR	Pair
PT	Point
PTN	Partition
R	Radius
R.A.G.	Return Air Grille
R.D.	Roof Drain
RE BAR	Reinforcing Bars
REF	Reference
REINF	Reinforced
R.H.W.S.	Round Head Wood Screws
RM	Room
ROOF'G	Roofing
R.O.	Rough Opening
REDWD	Redwood
SAN. NAP.	Sanitary Napkin
S.A.R.	Supply Air Register
S.	South
S.C.	Solid Core
SCHED	Schedule
SCREEN'G	Screening
S.D.	Storm Drain
SOAP DISP	Soap Dispenser
SECT	Section
SHT	Sheet
SIM	Similar
SPEC	Specification
SQ	Square
S.S.	Stainless Steel or Service Sink
STA	Station
STD	Standard
STRUCT.	Structural
T.C.	Top of Curb
TEL	Telephone
THK	Thick
T.P.	Top of Paving
T.W.	Top of Wall
TYP	Typical
UNF	Unfinished
V.A.T.	Vinyl Asbestos Tile
VERT	Vertical
VEST	Vestibule
W.	West
W/	With
W.C.	Water Closet
WD	Wood
W/O	Without
WP	Waterproof
WSCT	Wainscot

AS BUILT

Brown + Rawdon Architects
3903 Brockton Avenue, Riverside, California 92501 (714) 682-4575
Robert E Rawdon C-1730 OCTOBER 1980

STRUCTURAL ENGINEERS.. BRANDOW & JOHNSTON ASSOCIATES
1660 W. THIRD, LOS ANGELES 90017
(213) 484-8950

MECHANICAL ENGINEERS.. S & W ENGINEERING INC.
3721 TIBBETTS, RIVERSIDE 92506
(714) 682-0223

ELECTRICAL ENGINEERS.. AARON CARROLL INC.
1227 TEMPLE, LOS ANGELES 90026
(213) 628-0838

APPROVED by the PARKS and RECREATION DEPT. CITY of RIVERSIDE

ACTING DIRECTOR)

RECREATION SUPERINTENDENT

PARK SUPERINTENDENT

PARK PROJECTS COORDINATOR

DATAPRINT N57510

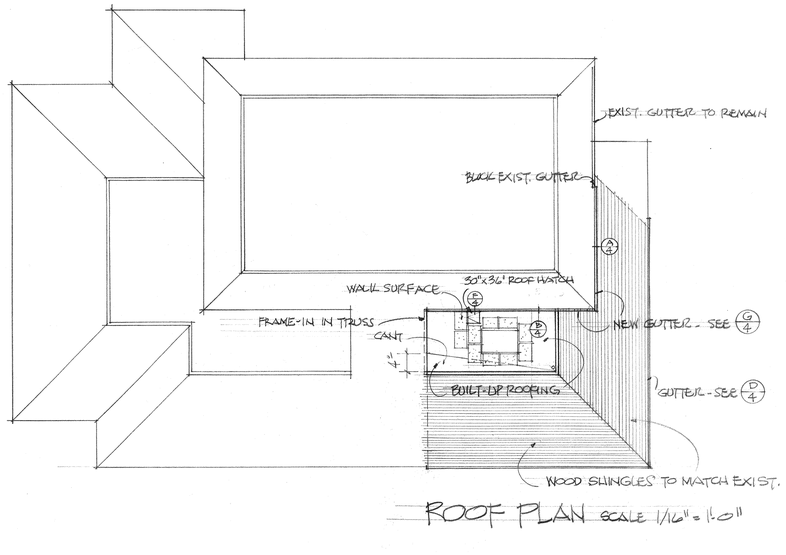

ROOF PLAN SCALE 1/16" = 1'-0"

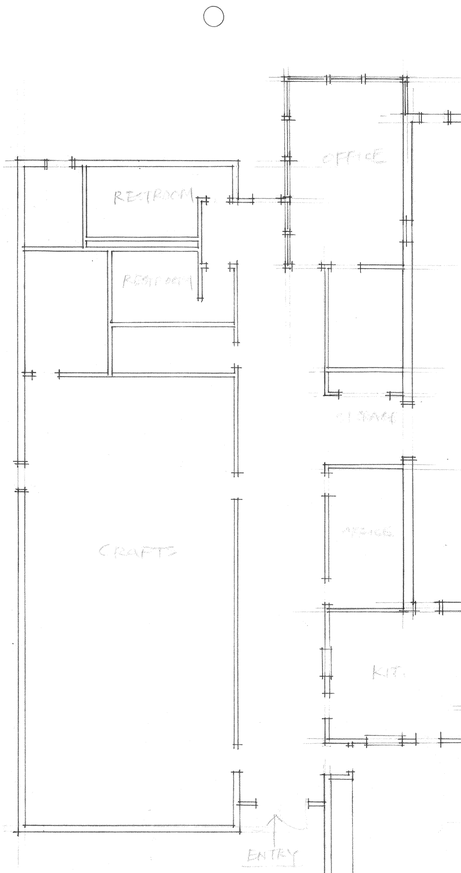

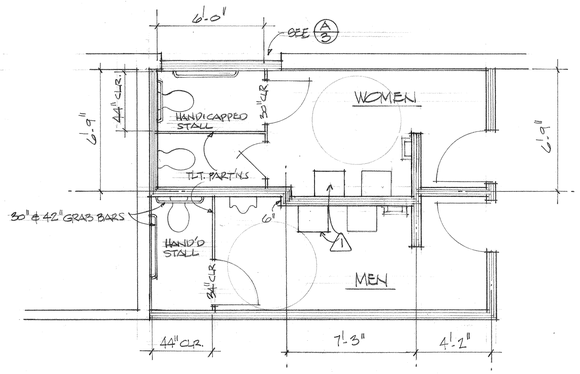

FLOOR PLAN.. TOILET ROOMS
SCALE 1/4" = 1'-0"

NOTES...
1. NEW CONSTRUCTION SHALL MEET 1 HR. FIRE REQUIREMENTS.

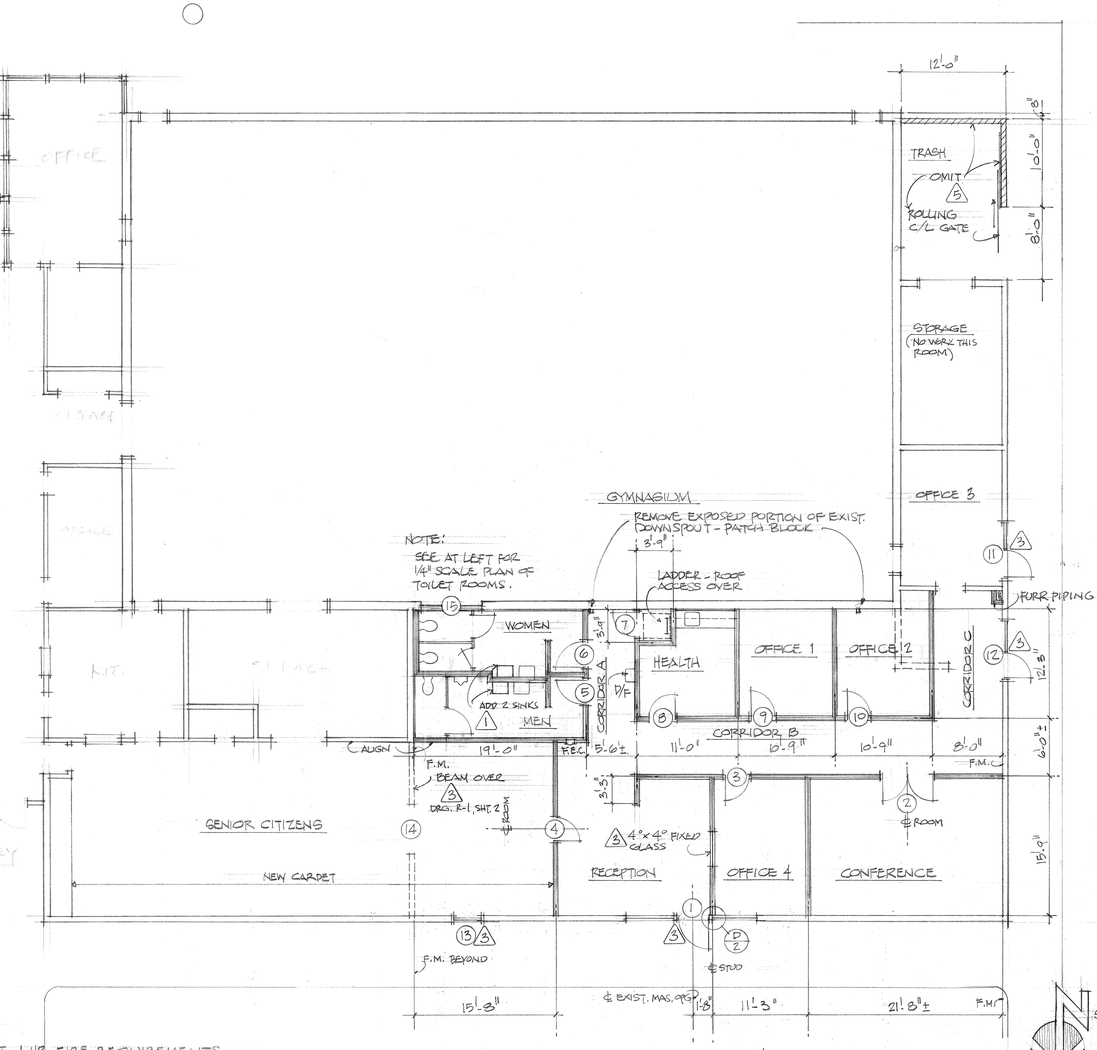

SCALE 1/8" = 1'-0"

FLOOR PLAN

KEY...
- EXISTING WALL TO REMAIN
- WALL TO BE REMOVED
- NEW WALL - WOOD STUD
- NEW WALL - MASONRY

AS BUILT

CHANGE ORDER NO.
CHANGE ORDER ITEM

Brown + Rawdon Architects
3903 Brockton Avenue, Riverside, California 92501 (714) 682-4575
Robert E Brown, C-1730

OCTOBER 1980

COMMUNITY CENTER EXPANSION
BRYANT PARK
FOR THE CITY OF RIVERSIDE

FLOOR PLAN
ROOF PLAN

DATAPRINT 1457510

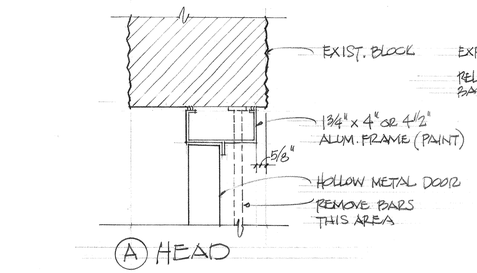

(A) HEAD

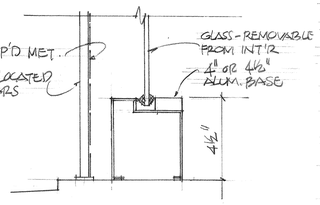

(G) SILL

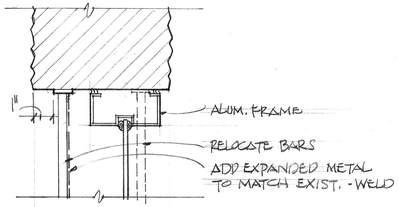

(B) JAMB

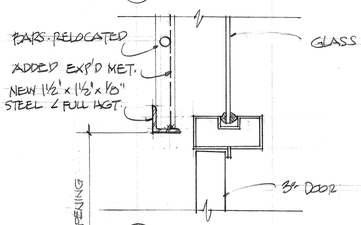

(C) VERTICAL MULLION

(D) VERTICAL MULLION

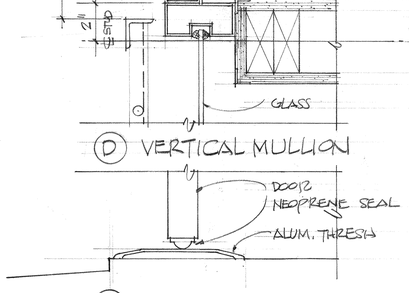

(E) SILL

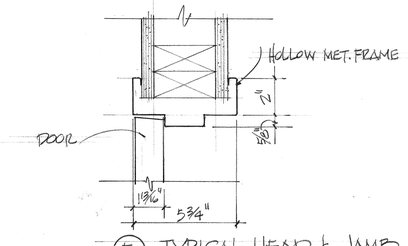

(E) TYPICAL HEAD & JAMB

DOOR SCHEDULE...

NO.	TYPE	SIZE	MAT'L	FRAME	DETAILS HEAD	DETAILS JAMB	DETAILS SILL	REMARKS
1	A	3'0" x 7'2" ± x 1¾"	H.M.	ALUM	A	C,D	E	
2	B	PR. 3'0" x 7'0" x 1¾"	WOOD	H.M.	F	F	—	~~RE-USE DOORS FROM (14)~~ (3)
3	C	3'0" x 7'0" x 1¾"	WOOD	H.M.	F	F	—	20 MIN. FIRE LABEL
4	D	"	"	"	F	F	—	" " " "
5	C	"	"	"	F	F	—	" " " "
6	C	"	"	"	F	F	—	" " " "
7	C	"	"	"	F	F	—	" " " "
8	C	"	"	"	F	F	—	" " " "
9	C	"	"	"	F	F	—	" " " "
10	C	"	"	"	F	F	—	" " " "
11		EXISTING					E	~~FIX ONE LEAF~~ (3)
12		EXISTING					E	~~FIX ONE LEAF~~ (3)
13		EXISTING						~~REMOVE HDW. PATCH FIX DOOR~~ (3)
14		REMOVE - REUSE AT (2)						
15		REMOVE - SEE DET. (A/3) FOR WORK AT OPG.						

DOOR TYPES...

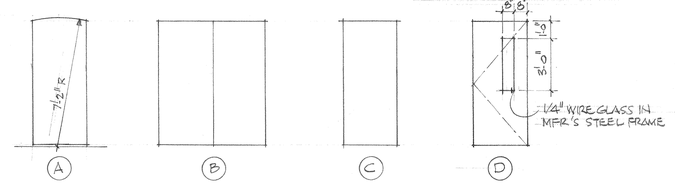

NOTE:
1. WOOD DOORS TO BE PLUSH "HARDWOOD".

INTERIOR FINISH SCHEDULE...

ROOM	FLOOR: VINYL ASBESTOS TILE	FLOOR: SHEET VINYL	FLOOR: CARPET	BASE: 4" TOPSET - COVE	BASE: 4" TOPSET - CARPET	WALLS: GYPSUM BOARD	WALLS: GYP. BD. OVER EXIST	WALLS: EXISTING TO REMAIN	CEILING: GYPSUM BOARD	CEILING: SUSPENDED ACOUSTIC	CEILING: EXISTING	REMARKS
												KEY R SEE REMARKS EE EGGSHELL ENAMEL F FLAT PAINT O FACTORY FINISH EP EPOXY PAINT
CORRIDOR A	O			O		EE		EE	F			
CORRIDOR B	O			O		EE		EE	F			
CORRIDOR C	O			O		EE		EE/R	F			REPLACE WOOD SIDING W/ GYP. BD.
WOMEN		O		O		EP	EP		EE			
MEN		O		O		EP	EP		EE			
HEALTH		O		O		EE	EE		F			
OFFICE 1	O			O		F		F	F			
OFFICE 2	O			O		F		F	F			
OFFICE 3	O			O				F/R			F	CAULK PERIMETERS
SENIOR CITIZENS			O/R		O/R	F		F		O		CARPET & BASE ENTIRE ROOM
RECEPTION	O			O		EE		EE	F			
OFFICE 4	O			O		F		F	F			
CONFERENCE	O			O		F		F	F			
LADDER/ACCESS RM	O			O		EE		EE	EE			

NOTE:
1. OMIT BASE AT SPLIT FACE BLOCK WALLS - SEE DET. (4/A4).
2. SEE ELEVATION, SHEET 3, AND DETAIL (A/3) FOR WORK AT GYMNASIUM.

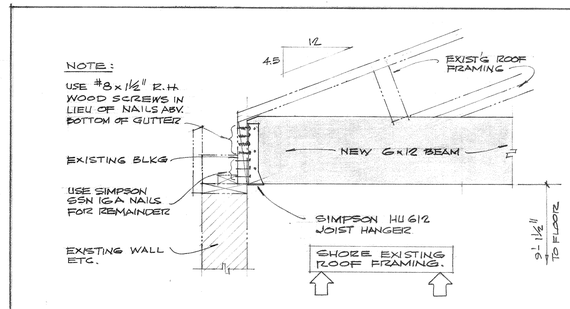

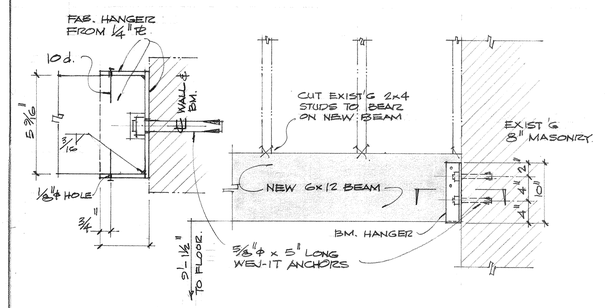

NEW BEAM & WALL TO BE REMOVED - SENIOR CITIZENS ROOM...
SCALE 1" = 1'-0"

7/23/81 (3)

REFLECTED CEILING PLAN SCALE ⅛" = 1'-0"

NOTE: NEW WALLS SHOWN ▭ SHALL CARRY ONLY TO THE UNDER SIDE OF SUSPENDED CEILING; THESE WALLS SHALL NOT PENETRATE CEILING.

CHANGE ORDER NO.
CHANGE ORDER ITEM

AS BUILT

Brown + Rawdon Architects
3903 Brockton Avenue, Riverside, California 92501 (714) 682-4575
Robert E Brown C-1730 OCTOBER 1980

COMMUNITY CENTER EXPANSION
BRYANT PARK
FOR THE CITY OF RIVERSIDE

DOOR and FINISH SCHEDULE
REFLECTED CEILING PLAN
SITE PLAN and DETAILS

2

DATAPRINT N57510

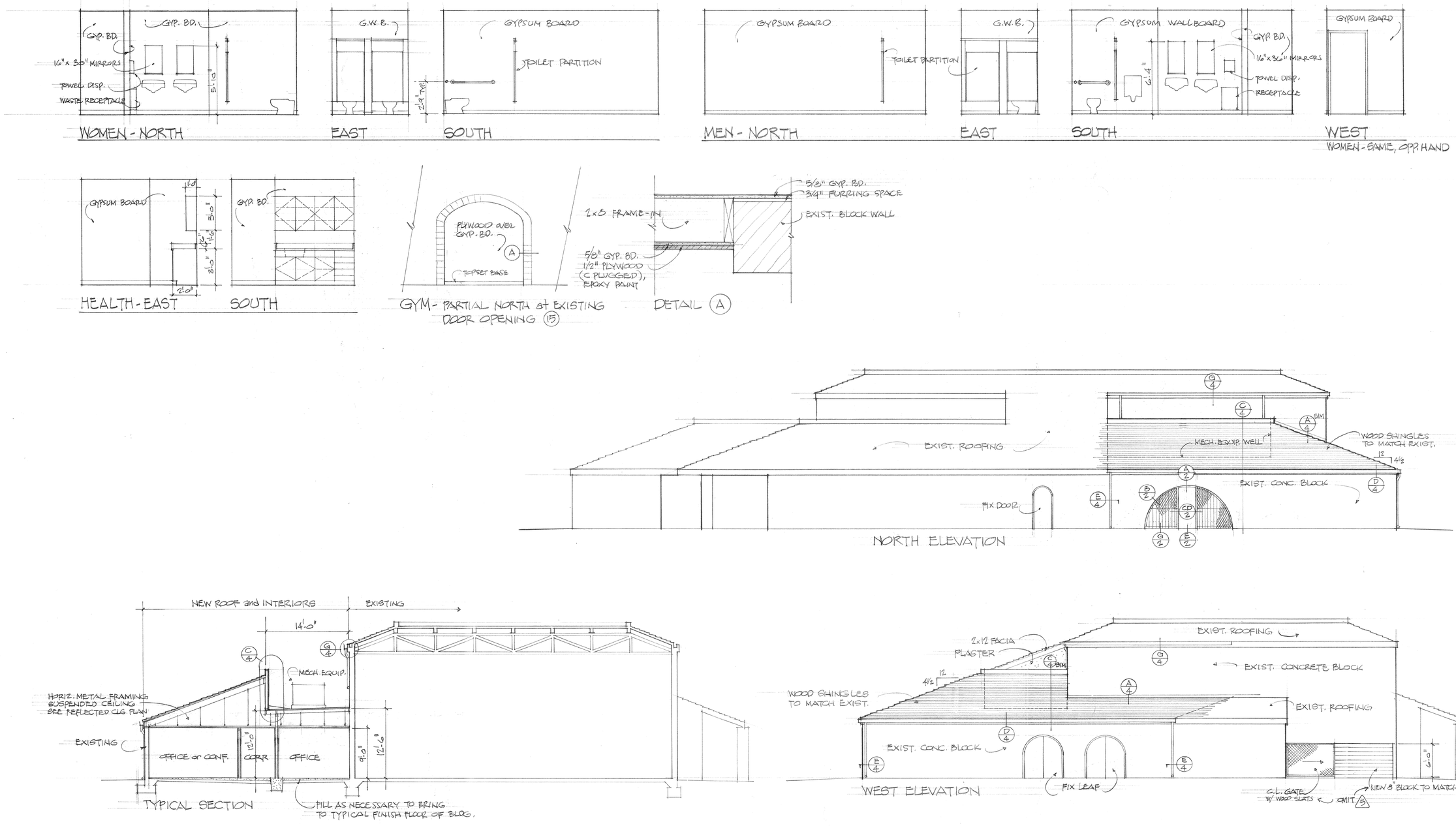

AS BUILT

CHANGE ORDER NO.
CHANGE ORDER ITEM

Brown + Rawdon Architects
3903 Brockton Avenue, Riverside, California 92501 (714) 682-4575
C-1730

OCTOBER 1980

COMMUNITY CENTER EXPANSION
BRYANT PARK
FOR THE CITY OF RIVERSIDE

INTERIOR ELEVATIONS
EXTERIOR ELEVATIONS
SECTION

3

DATAPRINT N57510

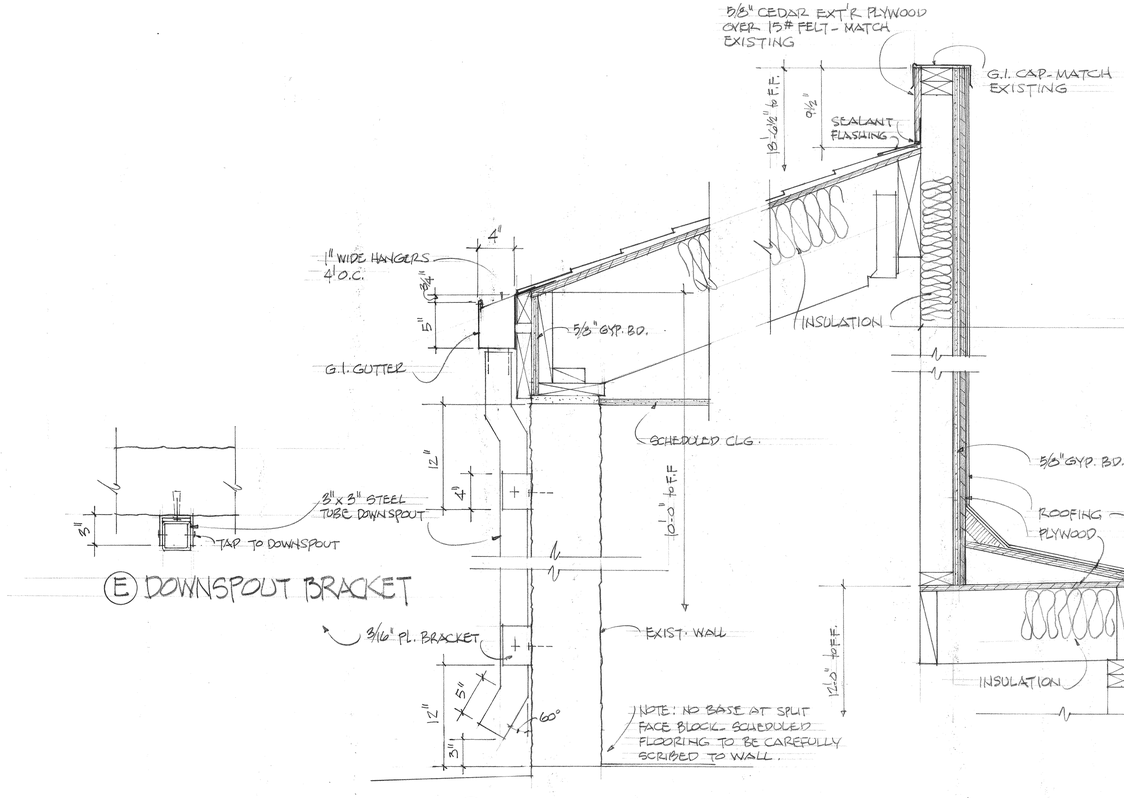

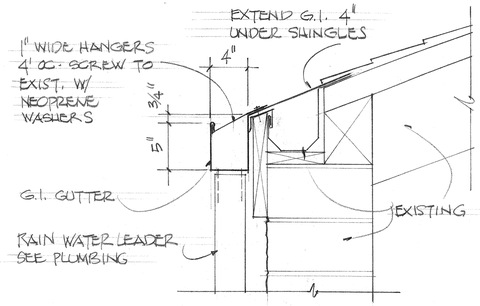

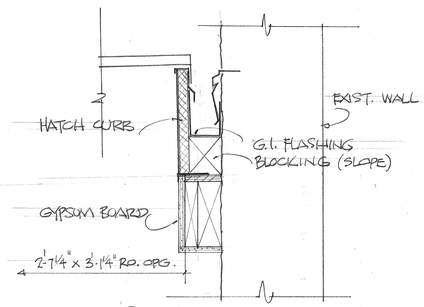

(E) DOWNSPOUT BRACKET

(D) GUTTER and DOWNSPOUT at LOW ROOF

(C) WALL at MECH. WELL

(G) NEW GUTTER at HIGH ROOF

(B) FLASHING DETAIL SCALE 1 1/2" = 1'-0"

(A) FLASHING DETAIL

AS BUILT

AS BUILT

Brown + Rawdon Architects
3903 Brockton Avenue, Riverside, California 92501 (714) 682-4575
Robert E. Brown C-1730

OCTOBER 1980

COMMUNITY CENTER EXPANSION
BRYANT PARK
FOR THE CITY OF RIVERSIDE

DETAILS

4

DATAPRINT N57510

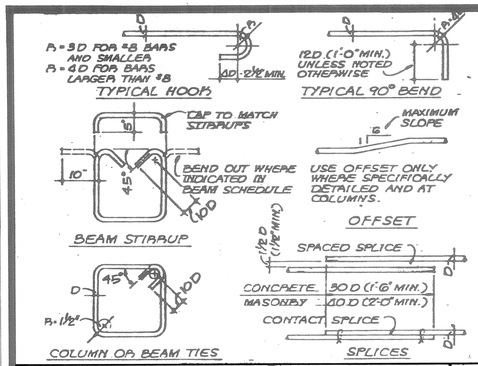

BAR BEND 1

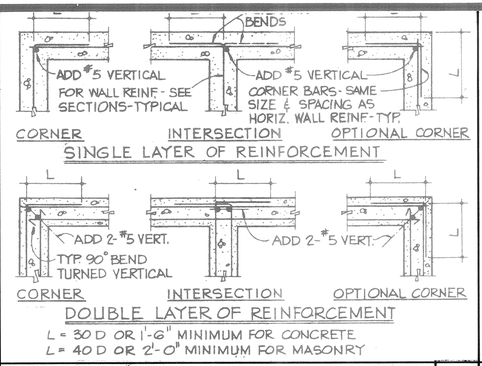

CORNERS AND INTERSECTIONS 2

ROOF SHEATHING NOTES:

1. PLYWOOD SHEATHING SHALL BE ½" OR ⅝" THICK AND SHALL CONFORM TO PRODUCT STD. PS 1-74 C-D STRUCT 1
2. NAILS FOR PLYWOOD SHEATHING SHALL BE 8d (0.131" ϕ x 2½" MIN. LONG, FULL HEAD AT ½" PLYWOOD SHEATHING EDGE - 6d @ 6" & @ 12" @ ⅝" PLYWOOD SHEATHING - SEE PLAN
3. INDIVIDUAL PLYWOOD SHEETS SHALL BE NOT LESS THAN 5'-0" IN LEAST DIMENSION NOR LESS THAN 5'-0" SQ. FEET IN AREA. USE FULL SIZE SHEETS WHEREVER POSSIBLE.
4. PLACE PLYWOOD SHEET WITH FACE PLIES PERPENDICULAR TO RAFTERS.
5. RAFTER LAYOUT SHALL BE COORDINATED WITH 4'-0" MODULE AS RELATED TO PLYWOOD SHEATHING PATTERN

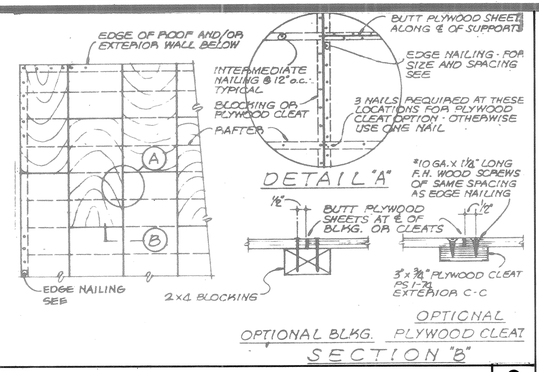

PLYWOOD SHEATHING 3

GENERAL NOTES

1. VERIFY ALL DIMENSIONS AND CONDITIONS AT THE SITE.
2. COORDINATE STRUCTURAL DETAILS AND DIMENSIONS WITH RELATED REQUIREMENTS ON ARCHITECTURAL, MECHANICAL AND ELECTRICAL DRAWINGS.
3. THE ARCHITECT WILL INTERPRET THE INTENT OF THE DOCUMENTS IN CASE OF POSSIBLE CONFLICT OR DISCREPANCY BETWEEN STRUCTURAL AND OTHER DISCIPLINES.
4. TYPICAL DETAILS ON SHEET S-1 APPLY IN ALL CASES WHETHER OR NOT SPECIFICALLY REFERENCED.
5. FOUNDATION INVESTIGATION BY PIONEER CONSULTANTS REPORT NO. JN838-010 DATED 8-19-74.

CLAYEY SAND
DESIGN BEARING PRESSURE: 1500 PSF (DL+LL)

6. WORKMANSHIP AND MATERIALS SHALL CONFORM TO APPLICABLE REQUIREMENTS OF THE UNIFORM BUILDING CODE 1979 EDITION.

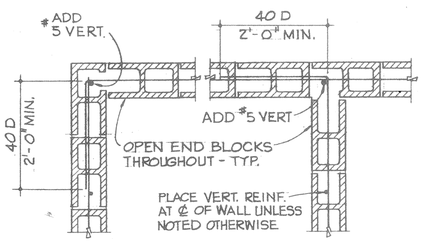

CONCRETE BLOCK DETAIL 4

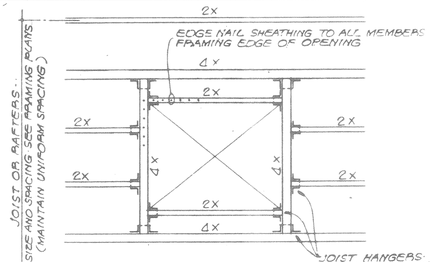

ROOF OPENINGS 5

LINTEL OPENING

MAXIMUM ROUGH OPENING	LINTEL
UP TO 4'-0"	4 x 4
4'-1" TO 6'-0"	4 x 6
6'-1" TO 8'-0"	4 x 8
8'-1" TO 10'-0"	4 x 10
OVER 10'-0" AND SPECIAL CASES	SEE PLANS AND/OR ELEVATIONS

WASHER SCHEDULE

BOLT SIZE	MALLEABLE IRON WASHER	CUT STEEL ℄ WASHER
½" ϕ	2½" ϕ x ⅛"	2½" x 2½" x ¼"
⅝" ϕ	2¾" ϕ x 5/16"	2½" x 2½" x ⅛"
¾" ϕ	3" ϕ x 7/16"	2¾" x 2¾" x ¼"
⅞" ϕ	3½" ϕ x 7/16"	3¼" x 3¼" x 5/16"

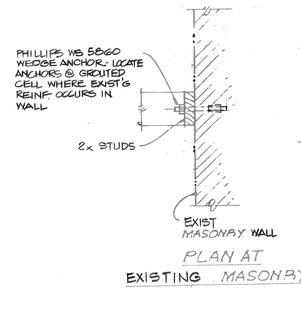

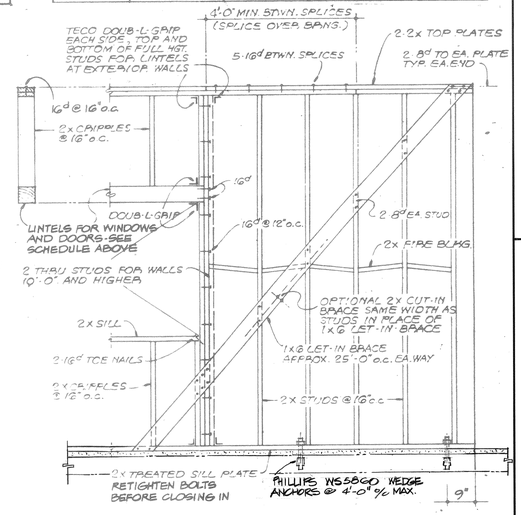

BASIC STRUCTURAL MATERIAL REQUIREMENTS

REINFORCING STEEL:	ASTM A615 GRADE 40 TYPICAL
BOLTS:	ASTM A307
CONCRETE:	f'c = 2000 P.S.I. (NORMAL WEIGHT)
CONCRETE BLOCK:	ASTM C90, GRADE N-1 (LIGHTWEIGHT) F'M = 1,500 P.S.I. x 50% (NO SPECIAL INSPECTION REQUIRED)
SAWN TIMBER:	DOUGLAS FIR NO. 1
PLYWOOD:	U.S. PRODUCT STANDARD PS1-74. C.D. STRUCT 1

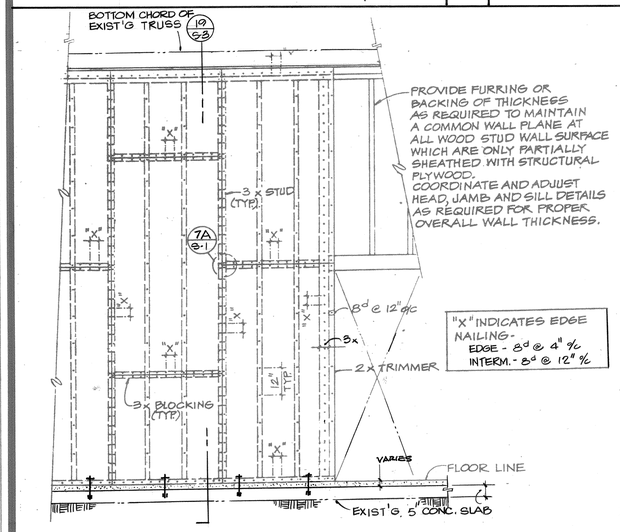

NOTES:

- PLYWOOD SHALL BE ½" THICKNESS AND CONFORM TO PS1-74 C-D STRUCT I
- ALL NAILS SHALL BE COMMON WIRE NAILS.
- INDIVIDUAL PIECES OF PLYWOOD SHALL BE NOT LESS THAN 2'-0" IN LEAST DIMENSION NOR 8 SQ. FT. IN AREA.
- PRE-BORE HOLES FOR NAILS WHERE MEMBERS TEND TO SPLIT.
- MACHINE APPLIED NAILING SHALL NOT BE USED FOR PLYWOOD WALL SHEATHING.
- RETIGHTEN SILL BOLT NUTS BEFORE CLOSING IN.

PLYWOOD SHEAR PANEL 7

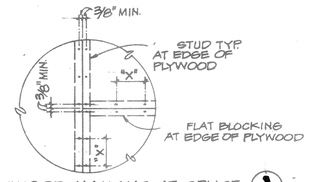

PLYWOOD NAILING AT SPLICE (A)

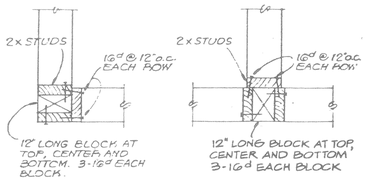

STUD WALL FRAMING 6

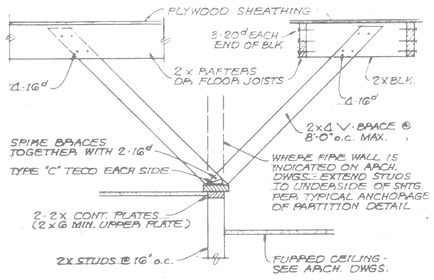

NON-BEARING PARTITION 8

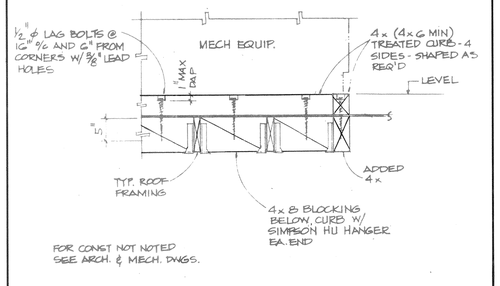

MECH. EQUIP. CURB 9

MATERIALS

- CONCRETE
- CONCRETE BLOCK
- EARTH
- SPECIAL TOPPING (SEE SPECS)

SYMBOLS

- NUMBER REF. / FULL HEIGHT SECTION / SHEET REF.
- NUMBER REF. / DETAIL OR SECTION / SHEET REF.
- FINISH ELEVATION

LEGEND

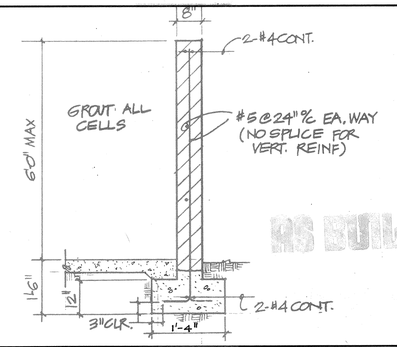

SECTION 10

Brown + Rawdon Architects
3903 Brockton Avenue, Riverside, California 92501 (714) 682-4575
OCTOBER 1980

BRANDOW & JOHNSTON ASSOCIATES
CONSULTING STRUCTURAL ENGINEERS
1650 W. THIRD ST., LOS ANGELES, CALIFORNIA, 90017
TELEPHONE 484-8950 AREA CODE 213

COMMUNITY CENTER EXPANSION
BRYANT PARK
FOR THE CITY OF RIVERSIDE

GENERAL NOTES
TYPICAL DETAILS

S-1

DATAPRINT N57510

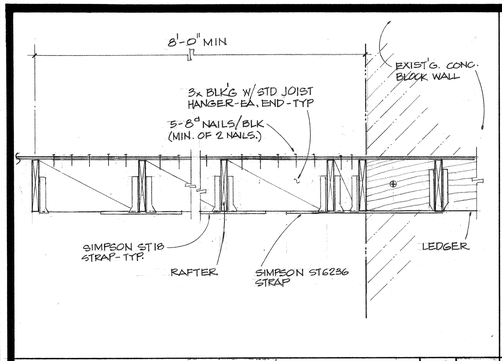

DETAIL 3/4" 1

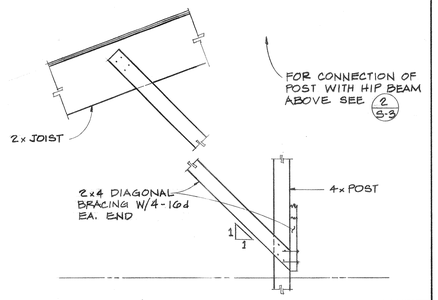

DETAIL 3/4" 2

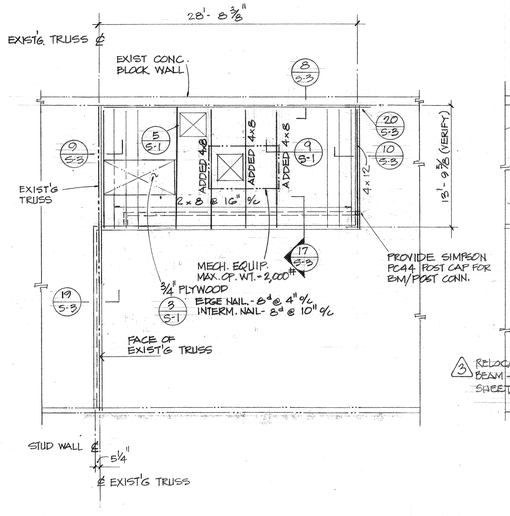

MECHANICAL WELL FRAMING PLAN
scale : 1/8" 1 0"

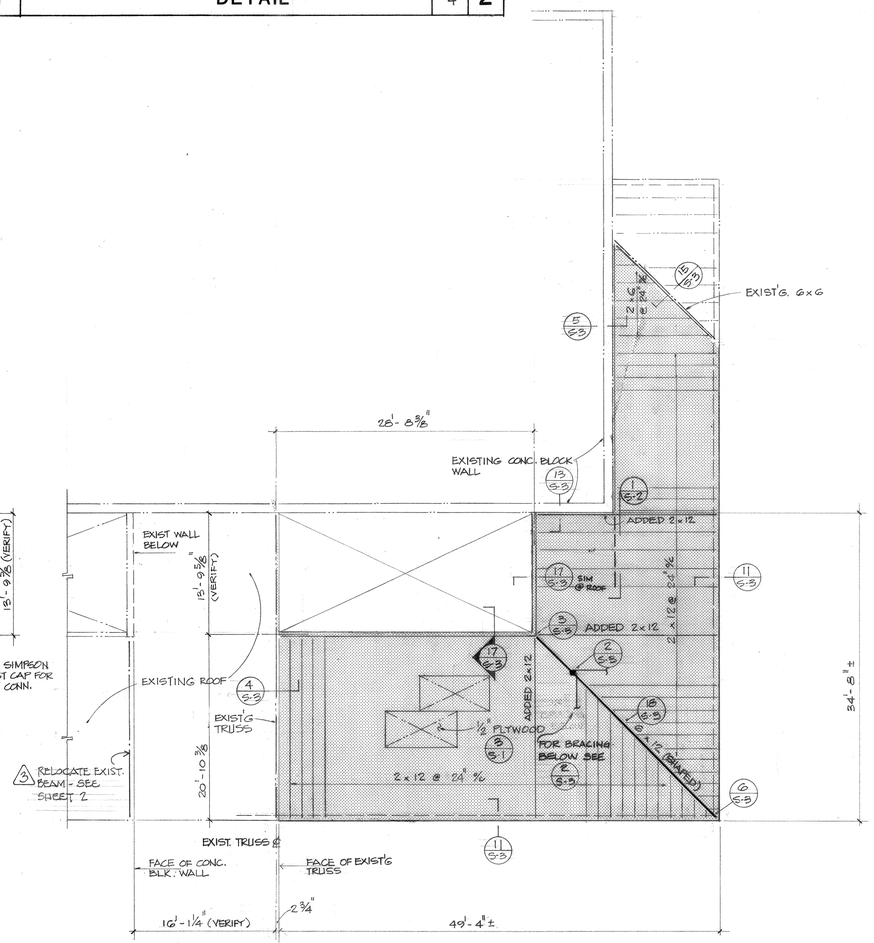

ROOF FRAMING PLAN
scale : 1/8" = 1'-0"

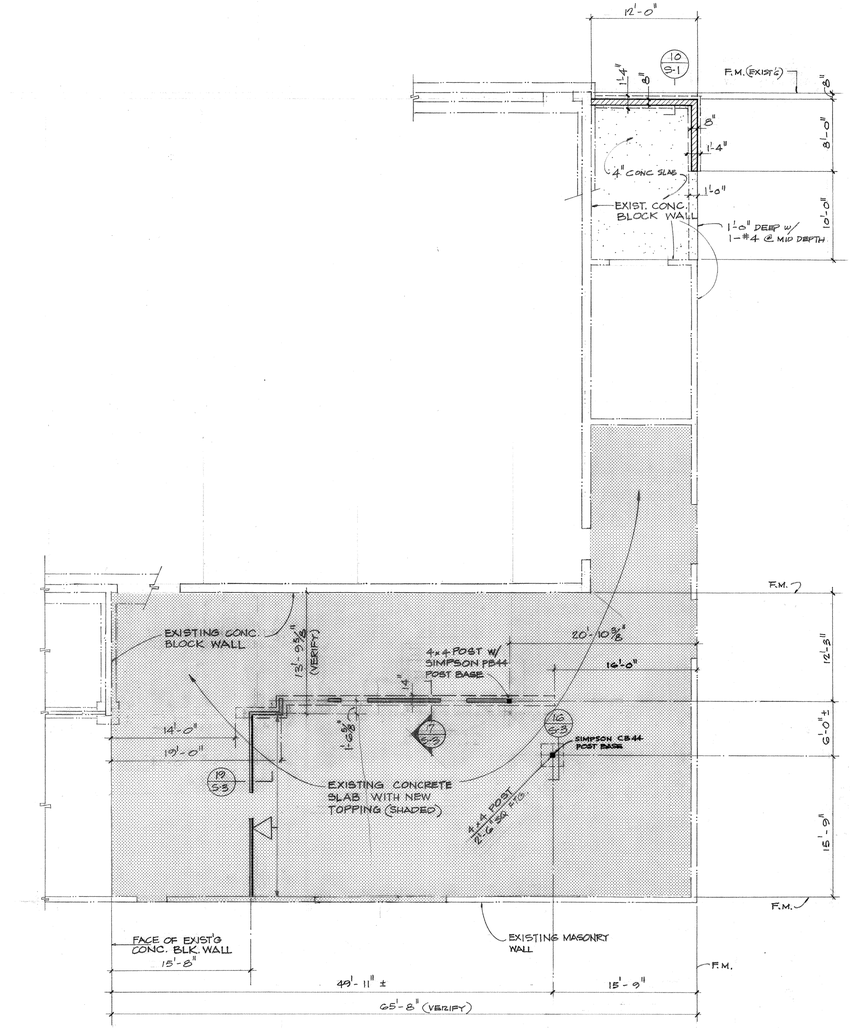

NOTE: INDICATES EXTENT OF PLYWOOD SHEAR PANEL - SEE 7/S-1

FOUNDATION AND FLOOR PLAN
scale : 1/8" = 1'-0"

AS BUILT

C.O. NO.
CHANGE ORDER ITEM

Brown + Rawdon Architects
3903 Brockton Avenue, Riverside, California 92501 (714) 682-4575
OCTOBER 1980

Marvin E. Kauda S-956
BRANDOW & JOHNSTON ASSOCIATES
CONSULTING STRUCTURAL ENGINEERS
1650 W. THIRD ST., LOS ANGELES, CALIFORNIA 90017
TELEPHONE 484-8950 AREA CODE 213

COMMUNITY CENTER EXPANSION
BRYANT PARK
FOR THE CITY OF RIVERSIDE

FOUNDATION AND FLOOR PLAN
ROOF FRAMING PLAN

S-2

DATAPRINT N57510

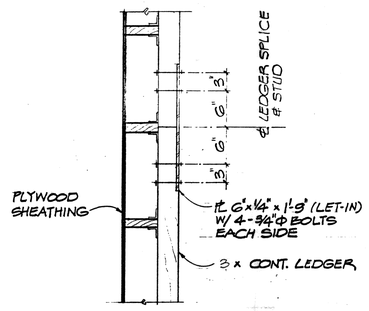

LEDGER SPLICE DETAIL | NO SCALE | 1

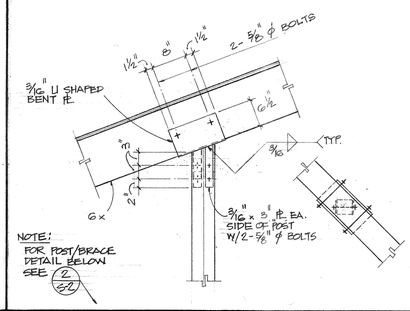

COL./BM. CONN. | 3/4" | 2

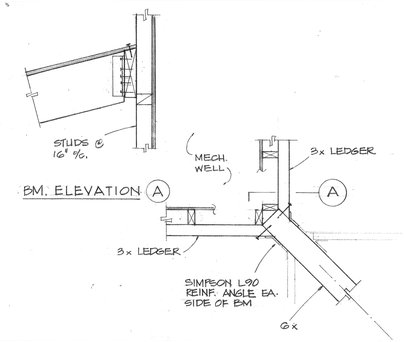

DETAIL | 3/4" | 3

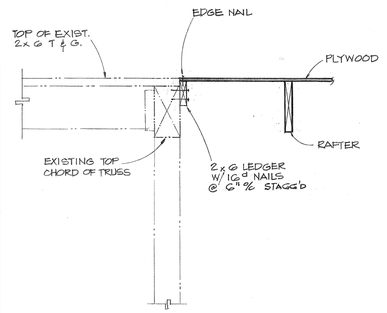

SECTION | 3/4" | 4

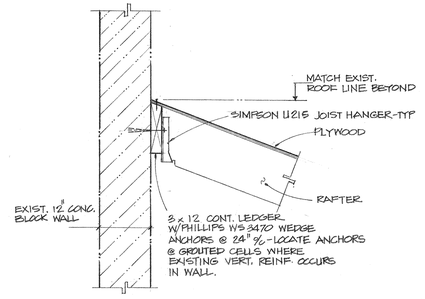

SECTION | 3/4" | 5

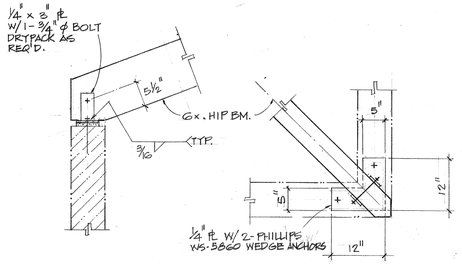

3/4" | 6

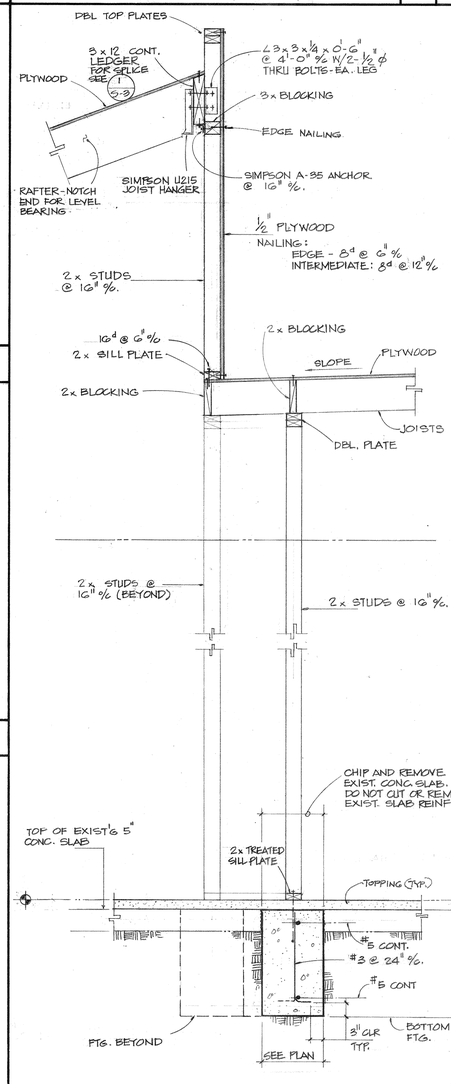

SECTION | 3/4" | 17

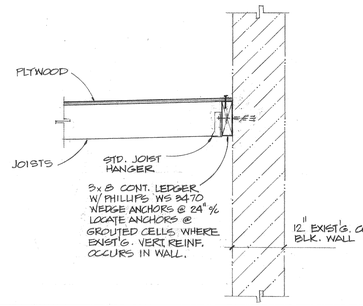

SECTION | 3/4" | 8

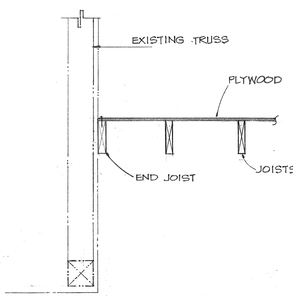

SECTION | 3/4" | 9

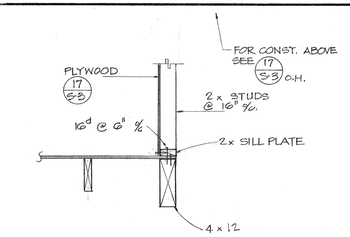

SECTION | 3/4" | 10

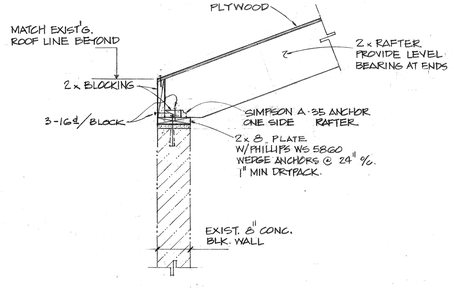

SECTION | 3/4" | 11

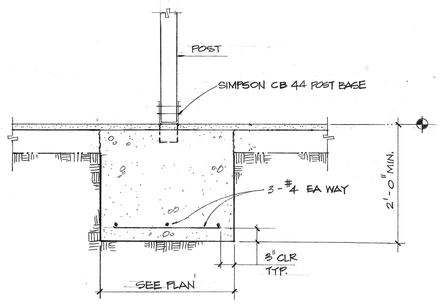

COL. FOOTING | 3/4" | 16

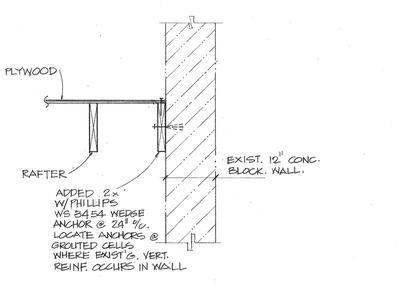

SECTION | 3/4" | 13

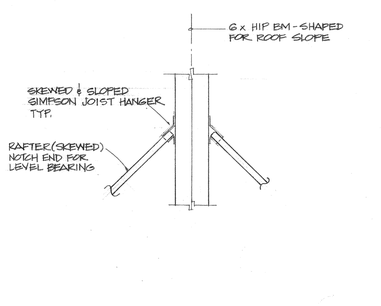

DETAIL | 3/4" | 18

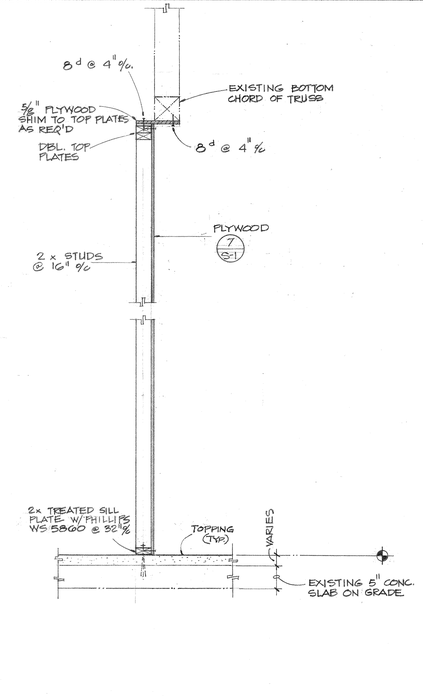

SECTION | 3/4" | 19

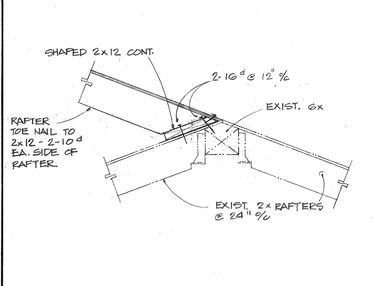

SECTION | 3/4" | 15

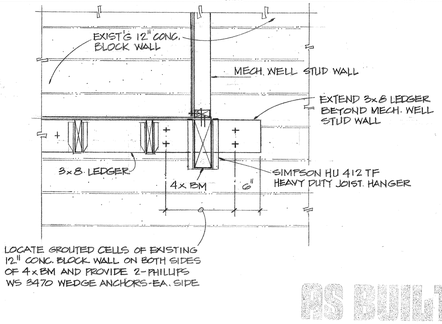

AS BUILT

DETAIL | 3/4" | 20

Brown + Rawdon Architects
3903 Brockton Avenue, Riverside, California 92501 (714) 682-4575
OCTOBER 1980

BRANDOW & JOHNSTON ASSOCIATES
CONSULTING STRUCTURAL ENGINEERS
1660 W. THIRD ST., LOS ANGELES, CALIFORNIA 90017
TELEPHONE 484-8950 AREA CODE 213

COMMUNITY CENTER EXPANSION
BRYANT PARK
FOR THE CITY OF RIVERSIDE

SECTIONS AND DETAILS

S-3

DATAPRINT 1457510

NOTE: ROUGH-IN H.W. & C.W. FOR 2 LAVATORIES IN EACH TOILET ROOM. INSTALL ~~ONE~~ TWO LAVATORY IN EACH TOILET. CONNECT C.W. ONLY. OMIT WATER HEATER IN MEN'S TOILET. (1)

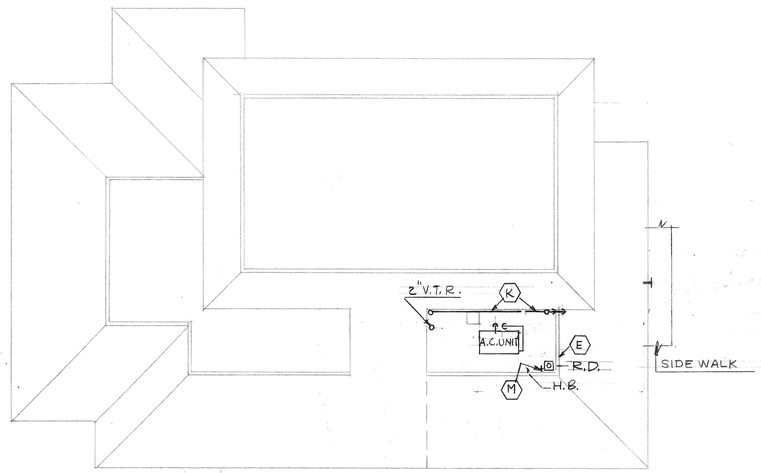

ROOF PLAN
SCALE: 1/16" = 1'-0"

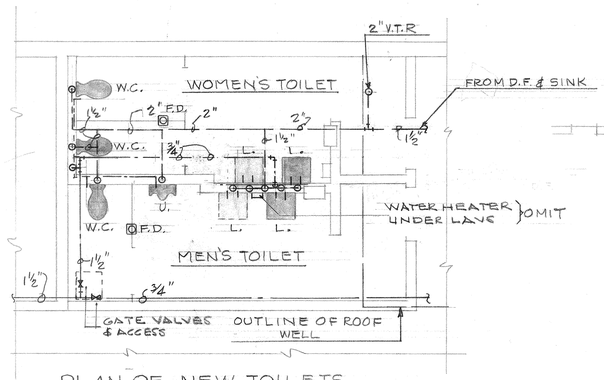

PLAN OF NEW TOILETS
SCALE: 1/4" = 1'-0"

NOTES

- (A) CONNECT 3/4" CONDENSATE DRAIN w/TAIL PIPE OF SINK.
- (B) CUT & ABANDON GAS LINE. REMOVE ALL GAS PIPING IN PATIO BARBEQUE AREA. CLOSE ALL OPENINGS.
- (C) REMOVE OR FILL IN FLOOR DRAIN. ABANDON WASTE PIPING
- (D) TERMINATE R.W.L. ABOUT 6" ABOVE SIDEWALK.
- (E) PLACE 3" OVERFLOW ABOUT 4" ABOVE ROOF LOW POINT
- (F) PLACE 3" OVER FLOW DISCHARGE ABOUT 9'-0"± ABOVE SIDE WALK
- (G) CUT GAS LINE. PLUG TEE.
- (I) REMOVE EXISTING 3/4" C.W. EXTENSION. REPLACE WITH 1 1/2" C.W. TO NEW TOILET ROOMS
- (J) REMOVE 1 1/2" GAS RISER TO ROOF A.C. UNIT. REPLACE WITH 2" RISER WITH 1 1/2" BRANCHES TO EXISTING & 3/4" TO NEW A.C. UNIT. NEW LINE TO NEW UNIT TO GO THRU WELL WALL AND EXTEND UNDER ROOF TO NEW UNIT. PROVIDE GAS COCK IN BOTH BRANCHES
- (K) PROVIDE 4" R.W.L. FROM HIGH ROOF, RUN HORIZONTAL PIPE ABOUT 6'-0" ABOVE DECK. DROP & RUN THRU WALL INTO TRUSS SPACE. SEE ARCH. DRG. FOR CONNECTION TO EXISTING HIGH ROOF GUTTERS.
- (L) CUT & CAP EXISTING 3/4" C.W. LINE.
- (M) 3/4" C.W. UP TO EQUIPMENT WELL, FOR HOSE BIBB.
- (N) INSTALL NEW WATER HEATER UNDER COUNTER.

FIXTURE CONNECTIONS

FIXTURE	ABR.	W.	V.	C.W.	H.W.	REMARKS
WATER CLOSET	W.C.	4"	2"	1"	–	FLUSH VALVE
LAVATORY	L.	2"	1 1/2"	1/2"	1/2"	–
URINAL	U.	2"	1 1/2"	1"	–	FLUSH VALVE
DRINKING FOUNTAIN	D.F.	2"	1 1/2"	1/2"	–	–
HOSE BIBB	H.B.	–	–	3/4"	–	–
SINK	S.	2"	1 1/2"	1/2"	1/2"	–
FLOOR DRAIN	F.D.	2"	1 1/2	1/2"	–	W/TRAP PRIMER
WATER HEATER	W.H.	–	–	1/2"	1/2"	SEE SPECS.
ROOF DRAIN	R.D.	3"	–	–	–	SEE SPECS.

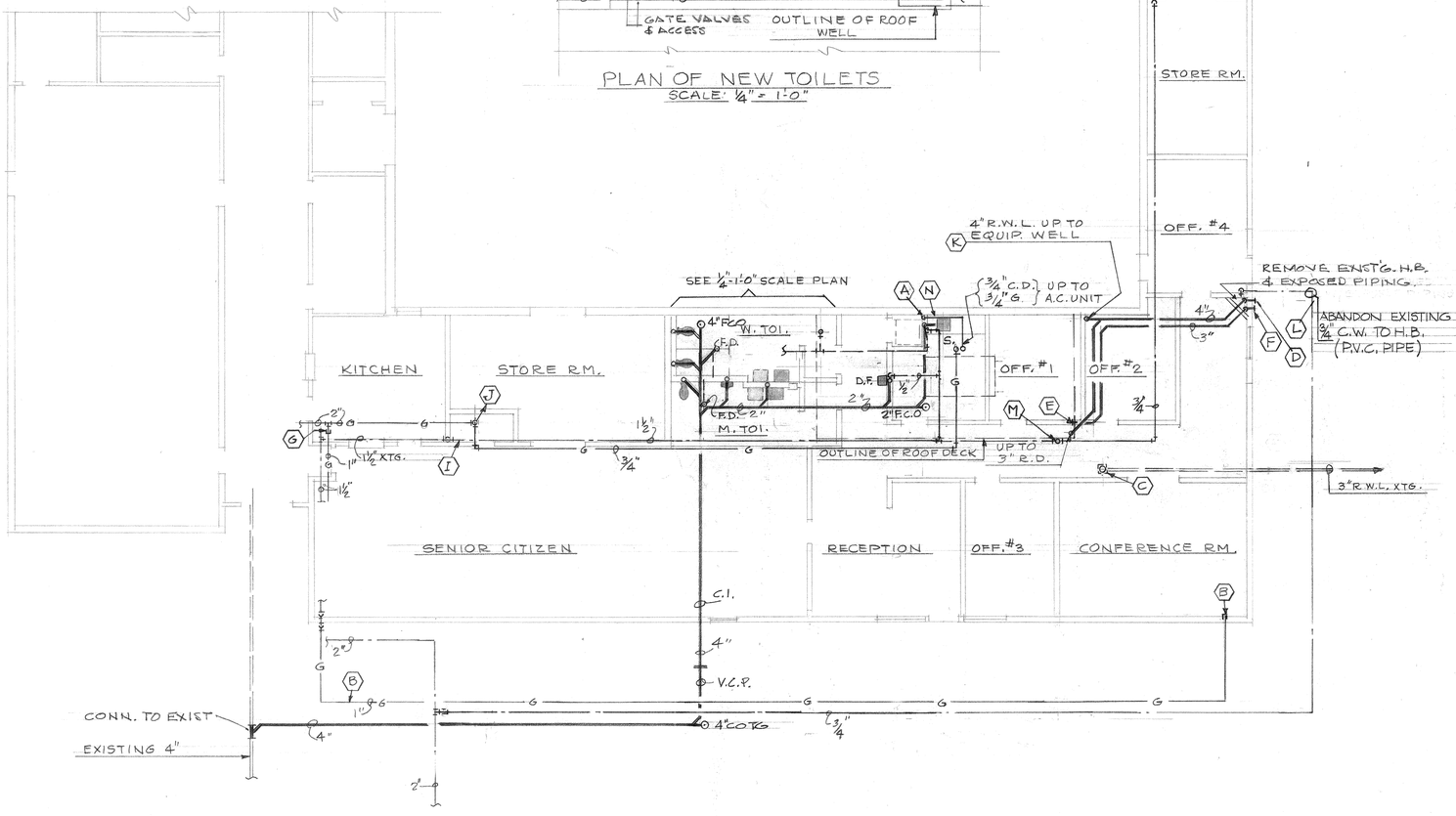

PLUMBING FLOOR PLAN
SCALE 1/8" = 1'-0"

AS BUILT

C.O. NO. 1
CHANGE ORDER ITEM

80.18

Brown + Rawdon Architects
3903 Brockton Avenue, Riverside, California 92501 (714) 682-4575
OCTOBER 1980

S. W. ENGINEERING INC.
3721 TIBBETS STREET
RIVERSIDE, CALIFORNIA
PHONE 682-0223

COMMUNITY CENTER EXPANSION
BRYANT PARK
FOR THE CITY OF RIVERSIDE

PLUMBING FLOOR PLAN & DETAILS

P-1

DATAPRINT N57510

EQUIPMENT SCHEDULE

A.C. UNIT = LENNOX GCS3-953-125 OR REZNOR RCG 225.75

AIR: 3000 CFM - 1/2" EXT. S.P. - 1005 RPM - V-BELT DRIVE
5 HP MOTOR - TWO 12x6 BLOWERS

HEATING: 125,000 BTU INPUT - 98750 BTU OUTPUT
3000 CFM - 28° TEMP. RISE

COOLING: 105° AMB. 80°DB/67°WB ENT'G. EVAP. COIL
85,000 BTU TOTAL - 54 500 BTU SENS.

FILTERS: ONE 20"x25"x1" & TWO 16"x25"x1"

ELECTRICAL: 208V-60-3 PHASE - 44.5 F.L.A.
FUSE - 80 AMP - WIRE - 52 AMP

ACCESSORIES: ROOF MOUNTING CURB, ECONOMIZER CYCLE - THERMOSTAT

WEIGHT: 2000 POUNDS

TOILET EXHAUST FANS (TWO) ACME MODEL V-4
400 CFM - 1/4" S.P. - 1080 RPM - 110V - 2.7 AMPS WITH VWC WALL CAP - CONNECT WITH ROOM LIGHTS.

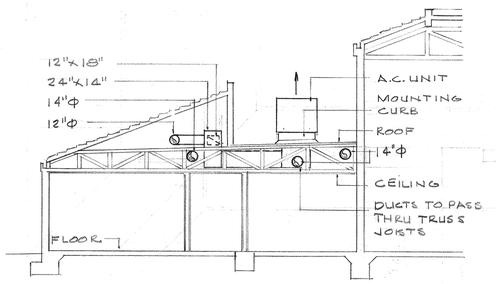

SECTION

SCALE: 1/8" = 1'-0"

A / M-1

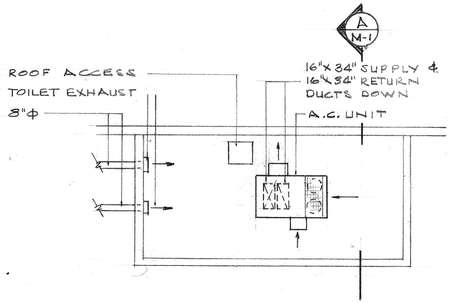

MECHANICAL - PARTIAL ROOF PLAN OF EQUIPMENT WELL

SCALE: 1/8" = 1'-0"

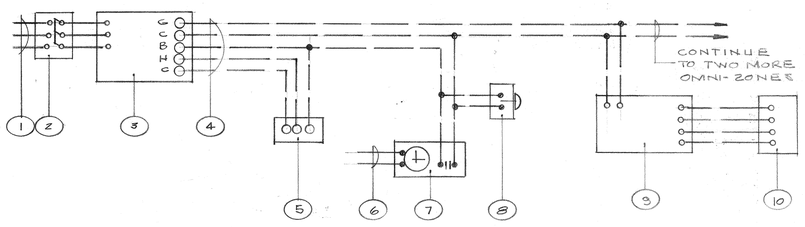

A.C. SYSTEM CONTROL DIAGRAM

NOT TO SCALE

OMNI-ZONES

MARK	C.F.M. MAX.	C.F.M. MIN	SIZE
1	880	440	12"Φ
2	930	460	12"Φ
3	740	370	12"Φ

SUPPLY DIFFUSERS

MARK	CFM	SIZE	THROW	DUCT CONN.
A	450	14 x 14	45ST	10"Φ
B	600	16 x 16	45ST	12"Φ
C	250	10 x 10	45ST	8"Φ
D	740	18 x 18	45ST	13"Φ
E	200	10 x 10	45ST	8"Φ
F	330	12 x 12	45ST	10"Φ

RETURN REGISTERS

MARK	CFM	SIZE	DUCT CONN.
1	400	12"X 12"	12"Φ
2	540	14"X 14"	10"Φ
3	250	10"X 10"	8"Φ
4	665	14"X14"	12"Φ
5	180	10"X 10"	8"Φ
6	295	10"X 10"	8"Φ

NOTE: ALL SUPPLY DIFFUSERS AND RETURN REGISTERS SHALL HAVE CALIFORNIA STATE FIRE MARSHAL APPROVED FIRE DAMPER AND DUCT DROP CONSTRUCTION. DUCT DROP TO BE SPRAYED WITH ALBI 895.

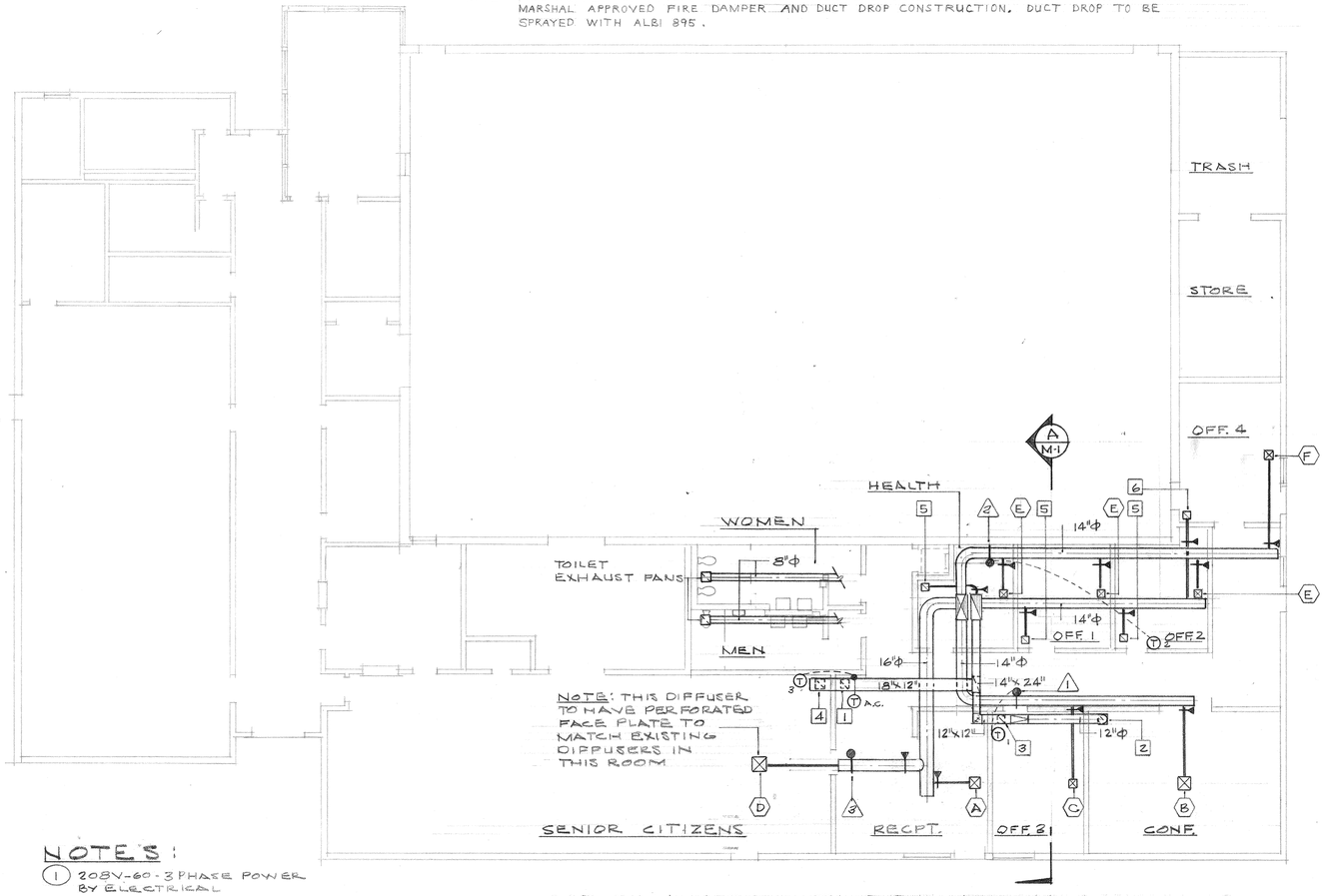

MECHANICAL - FLOOR PLAN

SCALE: 1/8" = 1'-0"

NOTES:

1. 208V-60-3 PHASE POWER BY ELECTRICAL
2. WEATHER PROOF DISCONNECT AT A.C. UNIT BY ELECTRICAL
3. A.C. UNIT
4. 24V. WIRING - BY MECHANICAL CONDUIT - BY ELECTRICAL
5. SYSTEM THERMOSTAT WITH GUARD, SET POINT STOPS & AUTOMATIC CHANGE OVER. - BY MECHANICAL
6. 110V. POWER - BY ELECTRICAL
7. 7 DAY TIME CLOCK IN ROOF ACCESS CLOSET - BY MECHANICAL
8. 0 TO 3 HR TIME OVER-RIDE NEXT TO SYSTEM STAT. - BY MECHANICAL
9. OMNI-ZONE DAMPER - BY MECHANICAL
10. OMNI-ZONE THERMOSTAT - BY MECH.

SYMBOLS

- FLEXIBLE DUCT
- VOLUME DAMPER
- OMNI-ZONE DAMPER
- (T) THERMOSTAT

AS BUILT

80.18

Brown + Rawdon Architects
3903 Brockton Avenue, Riverside, California 92501 (714) 682-4575

OCTOBER 1980

S. & W. ENGINEERING INC.
3721 tibbetts street • riverside, california
telephone 682-0223

COMMUNITY CENTER EXPANSION
BRYANT PARK
FOR THE CITY OF RIVERSIDE

MECHANICAL FLOOR PLAN & DETAILS

M-1

DATAPRINT N57510

LOAD SUMMARY

EXISTING LOAD = 431.4 A
NEW CONNECTED LOAD = 100.0 A
TOTAL LOAD = 531.4 A

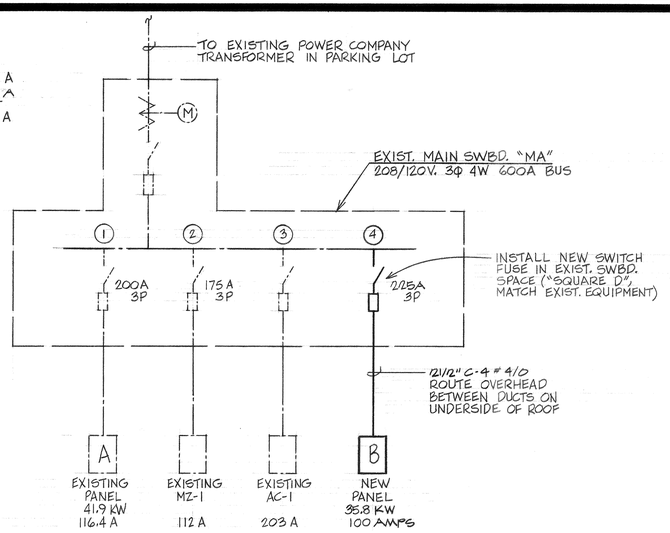

SINGLE LINE DIAGRAM (2 / E-1)
NO SCALE

LIGHTING FIXTURE SCHEDULE

TYPE	DESCRIPTION	MANUFACTURER	LAMP	GENERAL LOCATION
A	2×4, 4-LAMP SURFACE MOUNTED FLUORESCENT FIXTURE WITH PRISMATIC WRAPAROUND DIFFUSER.	PRUDENTIAL #P-1604-48"-RS-PRA OR EQUAL	(4) F40W R.S. WARM WHITE	OFFICE
B	2×4, 3-LAMP SURFACE MOUNTED FLUORESCENT FIXTURE, WITH PRISMATIC WRAPAROUND DIFFUSER	PRUDENTIAL #P-1603-48"-RS-PRA OR EQUAL	(3) F40W R.S. WARM WHITE	OFFICES, CONFERENCE ROOM
C	2' LONG, 2-LAMP SURFACE MOUNTED FLUORESCENT FIXTURE WITH PRISMATIC WRAPAROUND DIFFUSER.	PRUDENTIAL #P-1602-48" RS-PRA OR EQUAL	(2) F40 W R.S. WARM WHITE	HALLS, TOILET
D	SURFACE MOUNTED INCANDESCENT 10" ROUND OPAL DRUM	PRESCOLITE #9401	(2) 60W INCAND. A-19	TOILET, ENTRY
E	WALL MOUNTED EXIT LIGHT WITH SELF CONTAINED BATTERY UNIT & DOWN LIGHT, 6" HIGH GREEN STENCILED LETTERS, BRUSHED ALUMINUM TRIM FRAME, WITH ARROWS AS REQ'D. SINGLE & DOUBLE.	DUAL LITE #WGWW-PPW EL-BAF & DRWW-PPW, EL-BAL	(2) T-6 LAMP & (2) 6-VOLT LAMPS	GENERAL
F	WALL MOUNTED INCANDESCENT FIXTURE WITH UNBREAKABLE POLYCARBONATE DIFFUSER & TAMPER PROOF SCREWS.	KENNAL #3663	(1) 100W INCAND A-19	EXTERIOR NEAR ENTRANCE & ROOF
G	WALL MOUNTED INCANDESCENT FIXTURE WITH LEXAN DIFFUSERS.	HALO #H2413-2	(2) 60W INCAND A-19	TOILETS MOUNT OVER MIRROR
H	2×4, 4-LAMP RECESSED FLUORESCENT FIXTURE WITH PRISMATIC HINGE & LATCH DIFFUSER	PRUDENTIAL #P2324-RS-PRA	(4) F40W R.S. WW	SENIOR CITIZENS ROOM

SYMBOL LIST

- LIGHTING FIXTURE OUTLET, CEILING MOUNTED.
- LIGHTING FIXTURE OUTLET, WALL MOUNTED.
- FLUORESCENT FIXTURE
- FLUORESCENT FIXTURE
- FIXTURE SHOWN DOTTED INDICATES EXISTING

- S_a SINGLE POLE FLUSH TOGGLE SWITCH, +3'-6"; SUBSCRIPT "a" INDICATES OUTLET CONTROLLED.
- S_2 TWO POLE FLUSH TOGGLE SWITCH, +3'-6"
- S_3 THREE WAY FLUSH TOGGLE SWITCH, +3'-6"
- SM MANUAL MOTOR STARTER WITHOUT OVERLOAD PROTECTION.
- ST MANUAL MOTOR STARTER WITH OVERLOAD PROTECTION.
- DISCONNECT SWITCH, EX-O FUSED
- S_K KEY OPERATED SWITCH

- RECEPTACLE SHOWN DOTTED INDICATES EXISTING
- DUPLEX CONVENIENCE RECEPTACLE, +18".
- GROUND FAULT CONVENIENCE RECEPTACLE.
- SPECIAL RECEPTACLE AS NOTED ON PLAN.
- JUNCTION BOX MOUNTED TO SUIT FIELD CONDITIONS.
- JUNCTION BOX MOUNTED ON WALL OR EQUIPMENT.
- MOTOR OUTLET.
- TELEPHONE OUTLET, WALL MOUNTED, +18" UNLESS NOTED.
- WALL MOUNTED CLOCK OUTLET, +7'-6".
- THERMOSTAT OUTLET, +5'-6"
- PANEL BOARD
- (SD) SMOKE DETECTOR OUTLET, SEE FIRE ALARM RISER DIAGRAM ON SHEET E-2

- CONDUIT RUN CONCEALED IN WALL OR CEILING
- CONDUIT RUN CONCEALED IN WALL
- CONDUIT RUN EXPOSED.
- 1-3-5 HOME RUN TO PANEL "A", WITH CKT. NO. 1-3-5.
- FLEXIBLE CONDUIT RUN.
- CONNECTION TO INDICATED EQUIPMENT.
- 1/2"C-2 #12 — 3/4" C-4 #12 — 1"C-6 #12
- 1/2"C-3 #12 — 3/4" C-5 #12 — 1"C-7 #12
- CONDUIT STUB OUT AND CAP, PROVIDE MARKER.
- —T— 3/4"C.O. TELEPHONE CONDUIT RUN.
- —2T— 1"C.O. TELEPHONE CONDUIT RUN.
- +4.0" DISTANCE FROM OUTLET CENTER LINE TO FINISHED FLOOR DIRECTLY BELOW.
- 1_a SUBSCRIPT "1" INDICATES CKT. NO., "a" INDICATES CONTROLLED BY SWITCH S_a
- A/100 "A" INDICATES TYPE OF FIXTURE, "100" INDICATES FIXTURE WATTAGE.

A/C	AIR-CONDITIONING
BKBD.	BACKBOARD
C.O.	CONDUIT ONLY
CKT.	CIRCUIT
DISC. SW.	DISCONNECT SWITCH
FLA	FULL LOAD AMPERE
HP	HORSE POWER
SW.	SWITCH
SWBD.	SWITCHBOARD
TEL.	TELEPHONE
W.P.	WEATHERPROOF

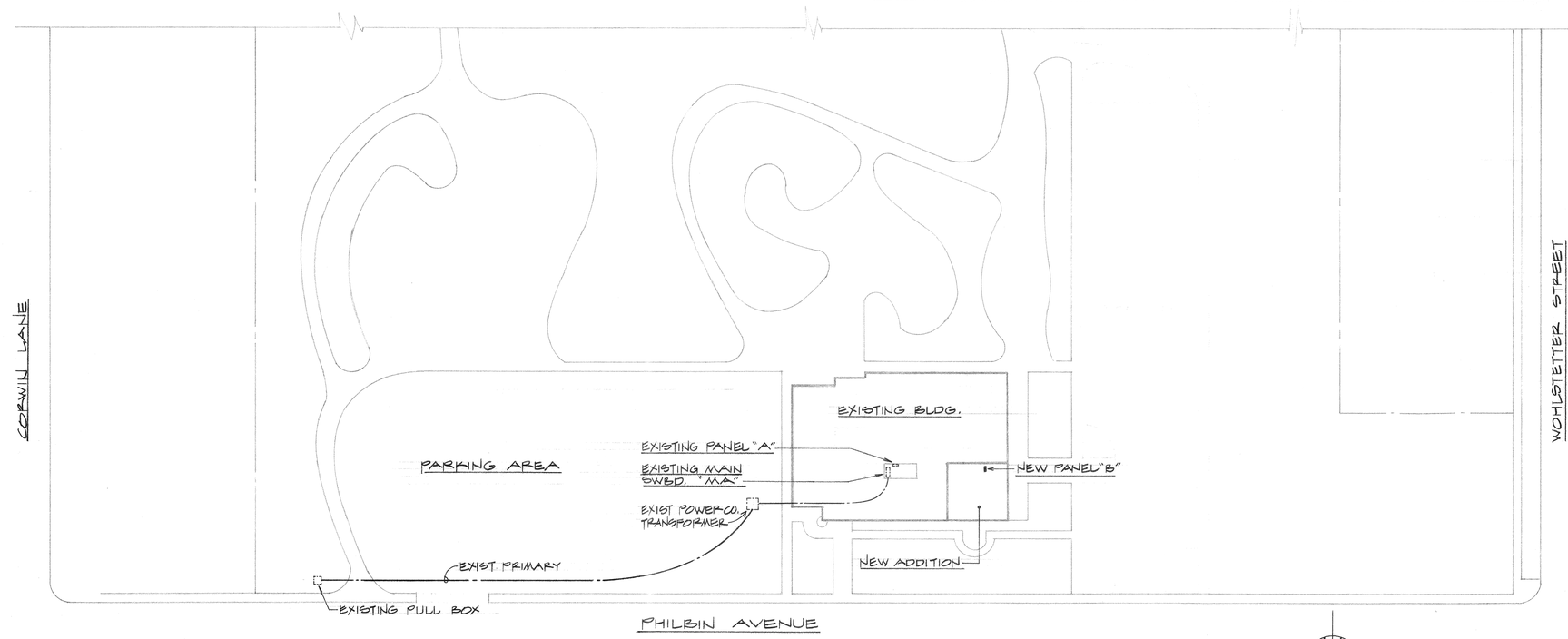

ELECTRICAL SITE PLAN (1 / E-1)
SCALE: 1" = 40'-0"

GENERAL NOTES:

1. VERIFY EXACT LOCATION, CHARACTERISTICS, RATING, CONTROL TERMINATIONS ETC. OF ALL EQUIPMENT, INCLUDING MECHANICAL EQUIPMENT, PRIOR TO START OF WORK.
2. ALL LIGHTING FIXTURES SHALL BE COMPLETE WITH ALL REQUIRED ACCESSORIES, TRIM, BRACKETS ETC. TO SUIT INSTALLATIONS OF CEILING TYPE
3. VERIFY EXACT LOCATION OF LIGHTING FIXTURES WITH ARCH. DRAWINGS.
4. ELECTRICAL RATINGS AND LOCATIONS OF MECHANICAL EQUIPMENT SHOWN ON MECH. DRAWINGS SHALL TAKE PREFERENCE OVER ELECTRICAL DRAWINGS. COORDINATE AND PROVIDE FOR CONTROL OF MECHANICAL EQUIPMENT INCLUDING CONDUIT AND WIRE AS REQUIRED.
5. VERIFY MANUFACTURERS RECOMENDED SIZE, TYPE AND CHARACTERISTICS OF OVER-CURRENT PROTECTION DEVICE AND DISCONNECT MEANS FOR ALL MECHANICAL EQUIPMENT.
6. ALL EQUIPMENT EXPOSED TO WEATHER SHALL BE WEATHERPROOF.
7. ALL WORK SHALL CONFORM TO THE LATEST GOVERNING ELECTRICAL CODES AND SHALL BE OF LATEST INDUSTRY STANDARDS OF WORKMANSHIP.
8. MAKE FINAL CONNECTIONS TO ALL ELECTRICAL EQUIPMENT UNDER THIS WORK.

AS BUILT

Brown + Rawdon Architects
3903 Brockton Avenue, Riverside, California 92501 (714) 682-4575
OCTOBER 1980

AARON CARROLL INC.
CONSULTING ELECTRICAL ENGINEERS
1227 TEMPLE STREET
LOS ANGELES, CALIF. 90026
TELEPHONE: (213) 628-0808

COMMUNITY CENTER EXPANSION
BRYANT PARK
FOR THE CITY OF RIVERSIDE

SITE PLAN
MISCELLANEOUS

SHEET: E-1 OF 3

DATAPRINT N30811

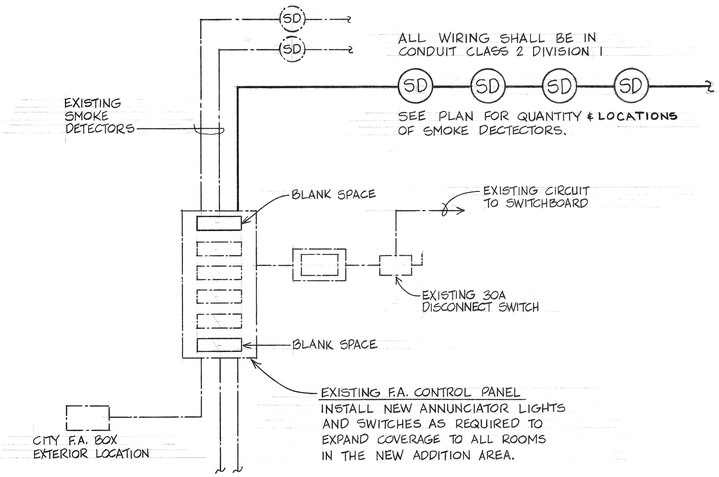

NOTE:

EXISTING F.A. SYSTEM IS SIMPLEX. ALL EQUIPMENT INSTALLED FOR EXTENSION OF THIS SYSTEM SHALL BE BY THE SAME MANUFACTURER AND APPROVED BY THE CITY.

FIRE ALARM RISER DIAGRAM (2 / E-2)

NO SCALE

2 NOTE: SEE "TIME & ALARM SYSTEMS" DRAWING (REVISED) SUPERCEDES ABOVE -

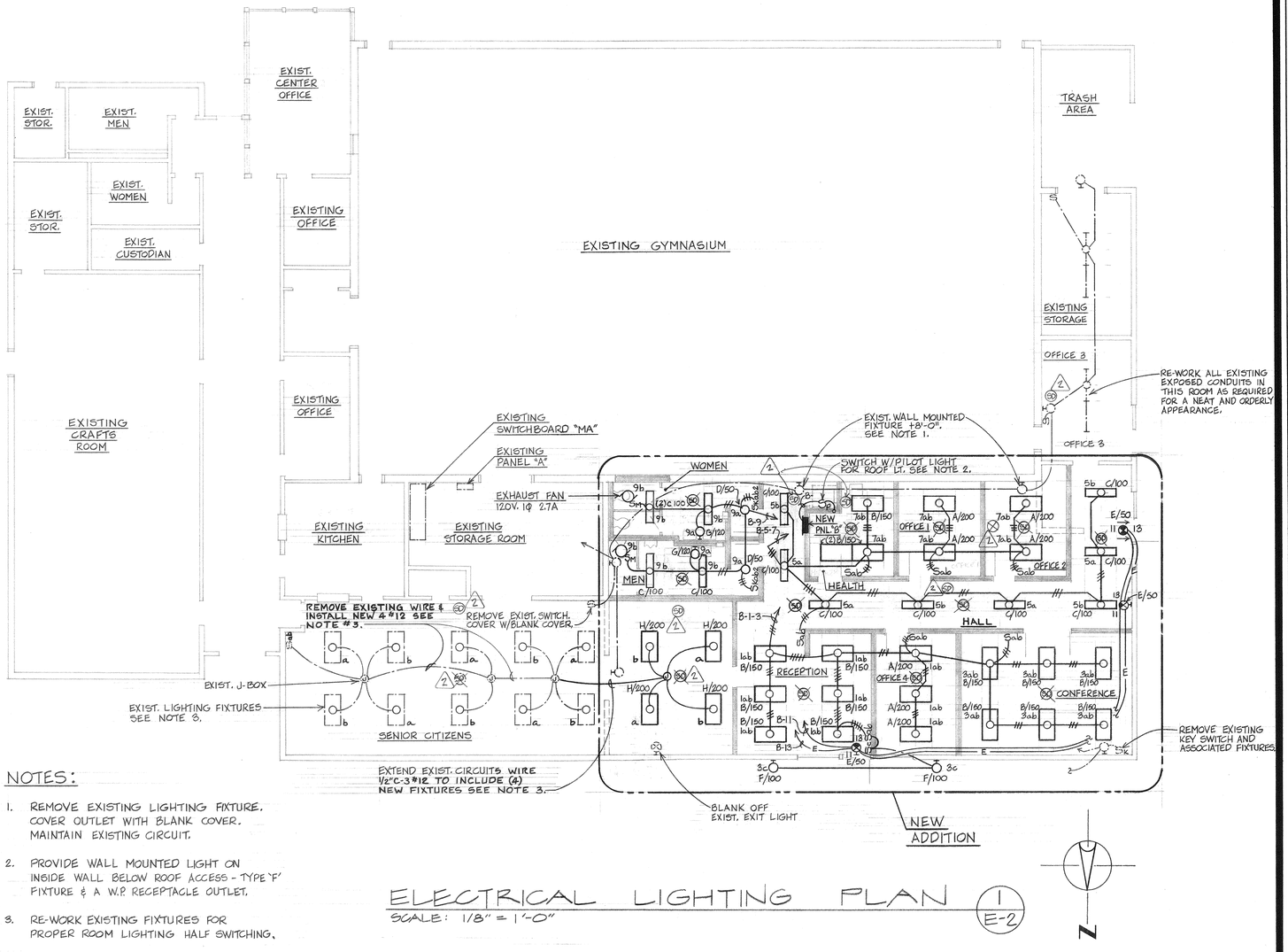

NOTES:

1. REMOVE EXISTING LIGHTING FIXTURE. COVER OUTLET WITH BLANK COVER. MAINTAIN EXISTING CIRCUIT.
2. PROVIDE WALL MOUNTED LIGHT ON INSIDE WALL BELOW ROOF ACCESS - TYPE 'F' FIXTURE & A W.P. RECEPTACLE OUTLET.
3. RE-WORK EXISTING FIXTURES FOR PROPER ROOM LIGHTING HALF SWITCHING.
4. 2 SMOKE DETECTORS SHOWN ARE AT ROOF LEVEL. SEE "TIME & ALARM SYSTEMS" DRAWING FOR ADDITIONAL DETECTORS.

ELECTRICAL LIGHTING PLAN (1 / E-2)

SCALE: 1/8" = 1'-0"

AS BUILT

C.O. NO.
CHANGE ORDER ITEM

Brown + Rawdon Architects
3903 Brockton Avenue, Riverside, California 92501 (714) 682-4575
OCTOBER 1980

AARON CARROLL INC.
CONSULTING ELECTRICAL ENGINEERS
1227 TEMPLE STREET
LOS ANGELES, CALIF. 90026
TELEPHONE: (213) 628-0808

COMMUNITY CENTER EXPANSION
BRYANT PARK
FOR THE CITY OF RIVERSIDE

LIGHTING PLAN

SHEET E-2 OF 3

DATAPRINT N35811

225A BUS
225 NON AUTO MAIN

PANEL "B"

208/120V - 3φ - 4W.
FLUSH MOUNTING

REMARKS	WATTS L1	WATTS L2	WATTS L3	LTG. FIX.	OUTLETS REC.	OUTLETS MISC.	BRKR. AMPS CIRCUITS
RECEPTION, OFF.	1650			10			20-1
CONFERENCE		1100		8			
HALL			1200	8			
OFFICE, HEALTH	1050			7			
TOILETS		1250		6	2		
EXIT LTS.			150	3			
EXIT LTS.	150			3			
SPARE							
SPACE							

BRKR. AMPS CIRCUITS	LTG. FIX.	OUTLETS REC.	OUTLETS MISC.	WATTS L1	WATTS L2	WATTS L3	REMARKS
20-1	6			1080			OFFICE
	5				900		
	5					900	
	7			1080			
	4				720		
						500	ELECT. D.F. AC UNIT
60-3		1		6240			
—	—				6240		— —
—	—					6240	— —
20-1							SPARE
40-1						3000	WATER HTR.
							SPACE

FEEDER LINE WATTS L1 = 11,250
L2 = 13,210
L3 = 8,990
TOTAL = 33,450
TOTAL LCL (25% OF 9,550) = 2,388
TOTAL FEEDER WATTS = 35,838
" " AMPS = 100

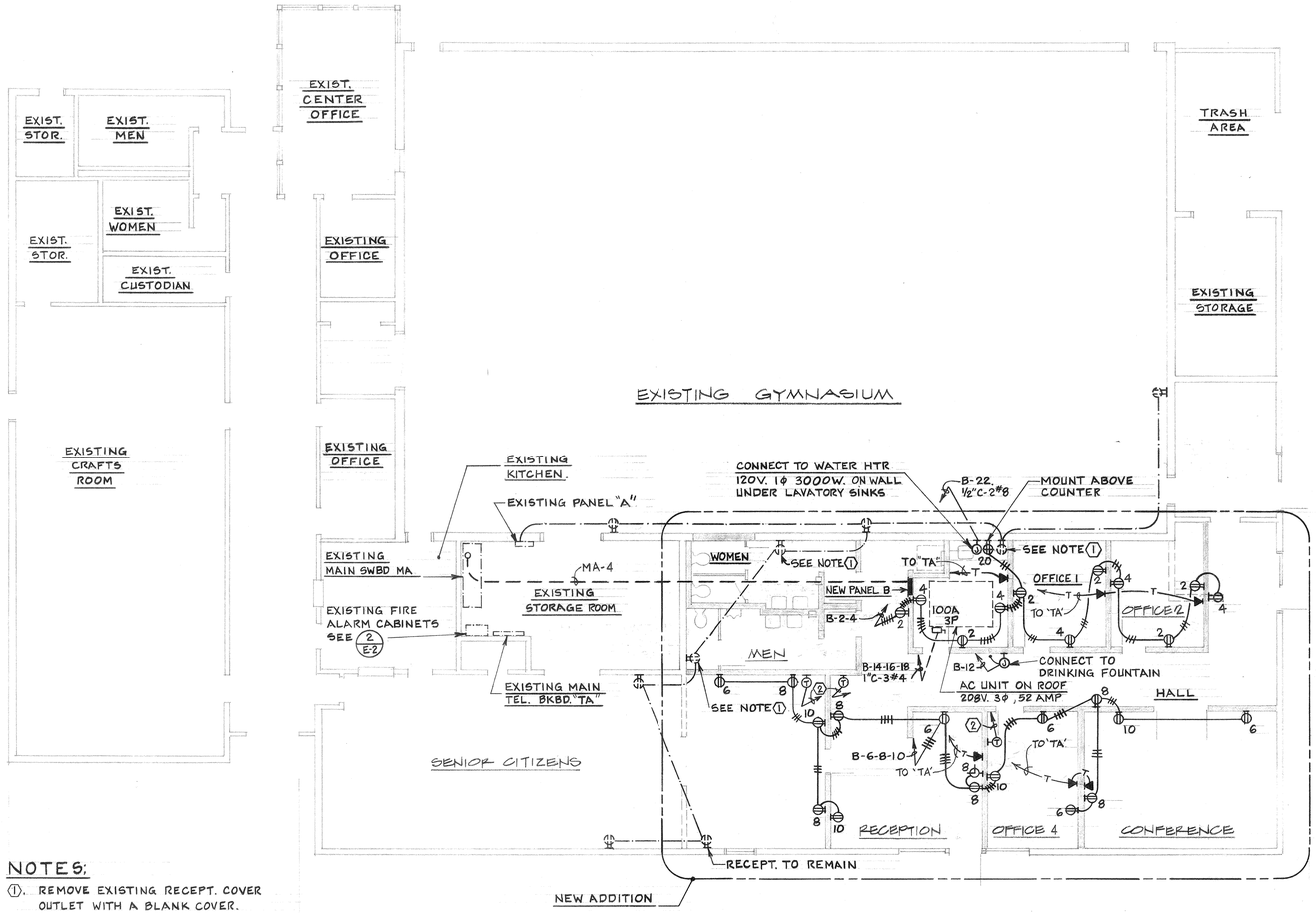

NOTES;

1. REMOVE EXISTING RECEPT. COVER OUTLET WITH A BLANK COVER. MAINTAIN EXISTING CIRCUIT.
2. 1/2"C.O. UP TO A.C. UNIT SEE MECH. DRAWINGS.

ELECTRICAL POWER & SIGNAL PLAN 1/2

SCALE: 1/8" = 1'-0"

N

AS BUILT

Brown + Rawdon Architects
3903 Brockton Avenue, Riverside, California 92501 (714) 682-4575
OCTOBER 1980

AARON CARROLL INC.
CONSULTING ELECTRICAL ENGINEERS
1237 TEMPLE STREET
LOS ANGELES, CALIF. 90035
TELEPHONE: (213) 628-0805

COMMUNITY CENTER EXPANSION
BRYANT PARK
FOR THE CITY OF RIVERSIDE

POWER AND SIGNAL PLAN

SHEET E-3 OF 3.

DATAPRINT N35811