REMOVE ALL EXISTING SPRINKLER HEADS & CONTROL VALVES AND CONTROL VALVE BOXES AND TURN INTO THE PARK MAINTENANCE SUPERVISOR. ALL PIPING WILL BE LEFT IN THE GROUND. ALL SUPPLY LINE FITTINGS THAT CONNECTED THE VALVES THAT ARE TO BE REMOVED SHALL BE CAPPED OFF. SUPPLY LINE SHOWN ON DRAWING

ALL ORGANIC MATERIAL SUCH AS EXISTING TURF, WEEDS, ETC. SHALL BE REMOVED FROM SITE.

CARE SHALL BE TAKEN DURING CONSTRUCTION TO SAVE ALL EXISTING TREES.

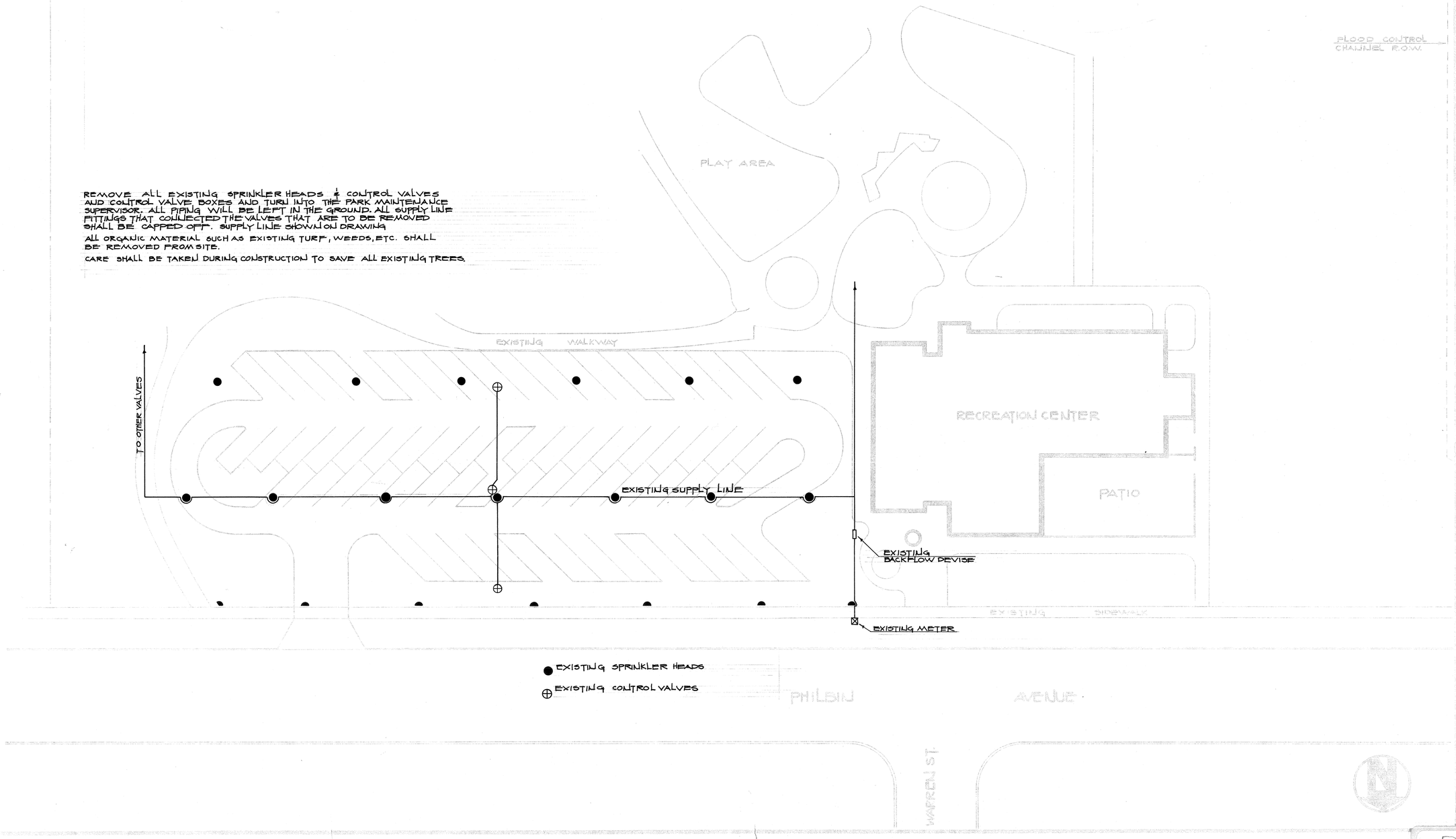

BRYANT PARK
RECREATION CENTER
LANDSCAPING
7950 PHILBIN AVENUE

PARK & REC. DEPT. CITY OF RIVERSIDE
2225 MARKET ST.

DEMOLITION PLAN

1"=20'

1 5

DRAWING NUMBER BRY

DRAWING NUMBER

DRAWING NUMBER

DRAWING NUMBER BR-7

P-307

1. DEMENSION LINES TAKEN IN 20' INTERVALS FROM NORTHEAST CORNER OF PROPERTY AND CONTINUED PAST THE RECREATION CENTER BLDG. AT 90° OF PROPERTY LINE SOUTH OF SIDEWALK.
2. CONCRETE WALKWAYS SHALL BE FURNISHED AROUND RECREATION CENTER AND, MEET EXISTING WALKWAYS. THE WALKWAYS SHALL BE 0.30' THICK. EXPANSION JOINTS ARE INDICATED ON GRADING PLAN.
3. PARKING LOT PAVING SHALL HAVE 0.54' OF D.G. BASE AUD 0.35' OF A. C. EXCAVATION WILL BE DONE SO THAT NOT MORE THAN 0.16' OF A.C. WILL BE ABOVE GRADE AND MEET ENTRANCE WAY.
4. CONCRETE PARKING STOPS SHALL BE PLACED ON THE OUTER PARKING STALLS, PLACEMENT SHOWN ON GRADING PLAN. SEE DETAIL 2-A. STRIPING SHALL BE 0.37' THICK WHITE LINES.
5. ALL WORK SHALL BE IN ACCORDANCE WITH THE CITY OF RIVERSIDE MUNICIPAL CODES.
6. CONTRACTOR SHALL OBTAIN ALL PERMITS REQUIRED FROM THE CITY OF RIVERSIDE.

DETAIL 2-A

CONCRETE PARKING STOPS

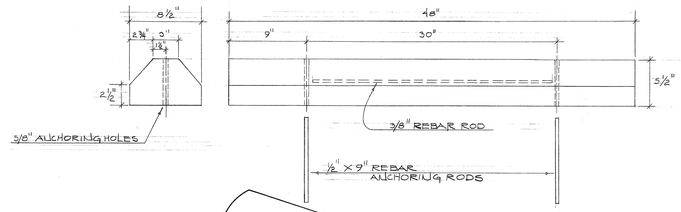

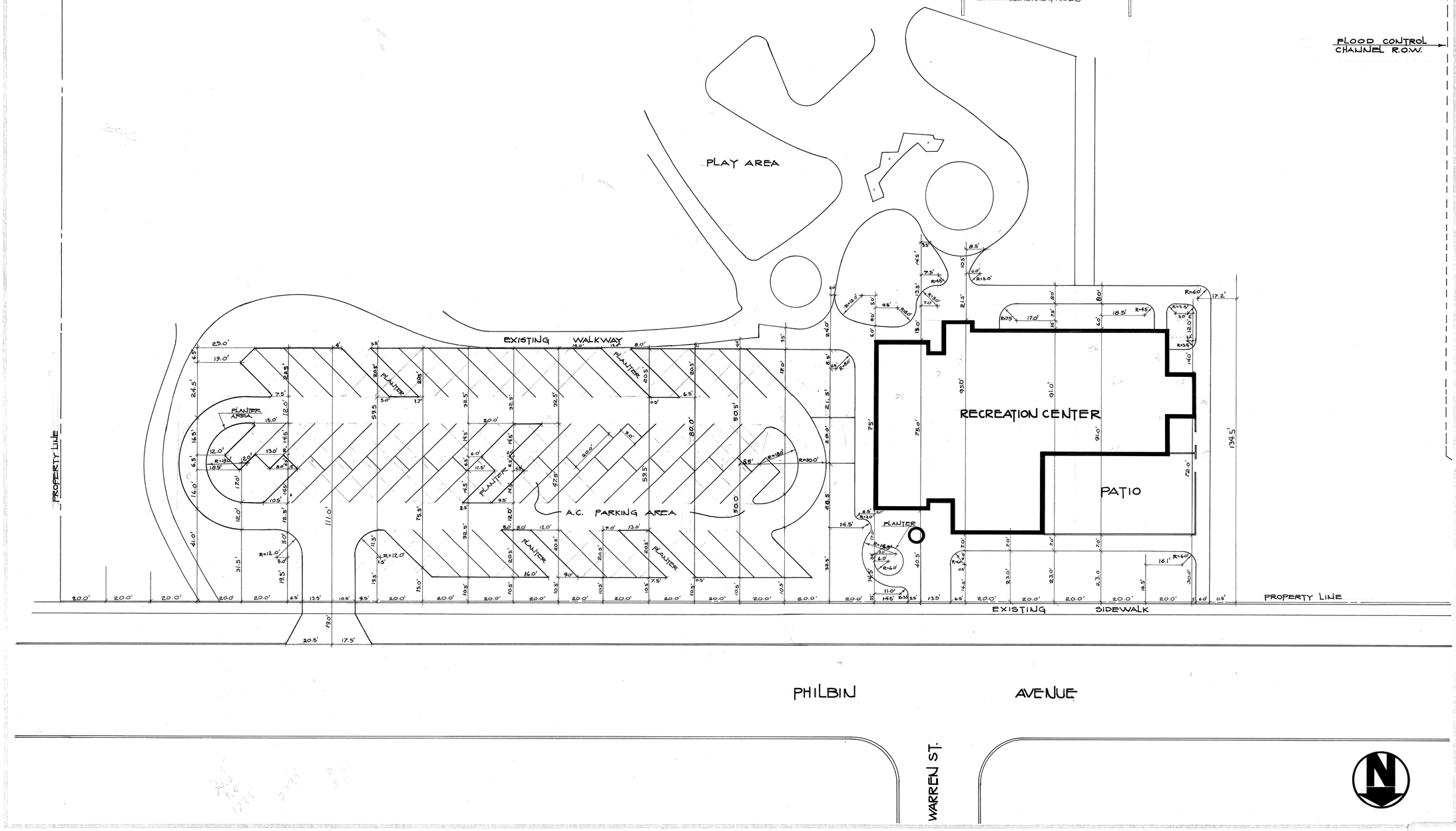

BRYANT PARK & REC. CENTER
RECREATION CENTER
LANDSCAPING
7950 PHILBIN AVENUE
CITY OF RIVERSIDE
JOB NO.
DATE:
REVISIONS:

LAYOUT PLAN
1"=20'

DRAWING NUMBER BR-6

PLAN HOLD CORPORATION • IRVINE, CALIFORNIA

F-106-16

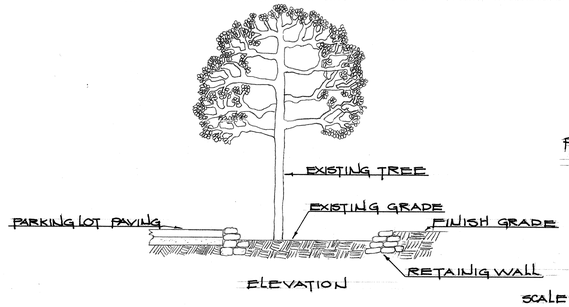

ELEVATION

SCALE: 1"=4'

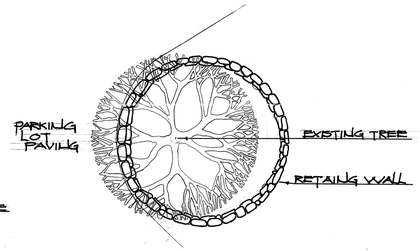

PLAN

PLANTER IS TO BE BUILT AROUND EXISTING TREE AS SHOWN.
PLANTER SHALL BE 10'Ø.
RETAINING WALL OF PLANTER SHALL BE BUILT UP USING NATURAL STONE OF A SIZE APPROX. 12" X 5" X 4" CEMENT SHALL BE PLACED BETWEEN THE STONES TO MAKE THE WALL RIGID BUT KEEPING THE NATURAL LOOK.

DETAIL A-3

CONTOURS & SPOT ELEVATIONS ARE CONTROLS ONLY AND ALL GRADING IS TO BE SMOOTH AND CONTINUOUS.

PROPOSED ELEVATIONS ON PARKING LOT & WALKWAYS INDICATES FINISHED SURFACE GRADE.

AREAS TO BE FILLED SHALL FIRST BE CLEARED AND GRUBBED THEN SHALL BE SCARIFIED TO PROVIDE A BOND BETWEEN EXISTING GROUND AND FILL MATERIALS. SCARIFY TO A DEPTH OF 6" FOR SOIL UNDER PLANTINGS. 8" FOR SOIL UNDER PARKING LOT.

FILL MATERIAL SHALL BE PLACED IN 8" LIFTS. COMPACT EACH LAYER OF FILL TO A RELATIVE COMPACTION OF AT LEAST 90%.

EXPANSION JOINTS SHALL BE ½" THICK.

SCORING LINES SHALL BE DONE WITH A 3/8" SCORING TOOL.

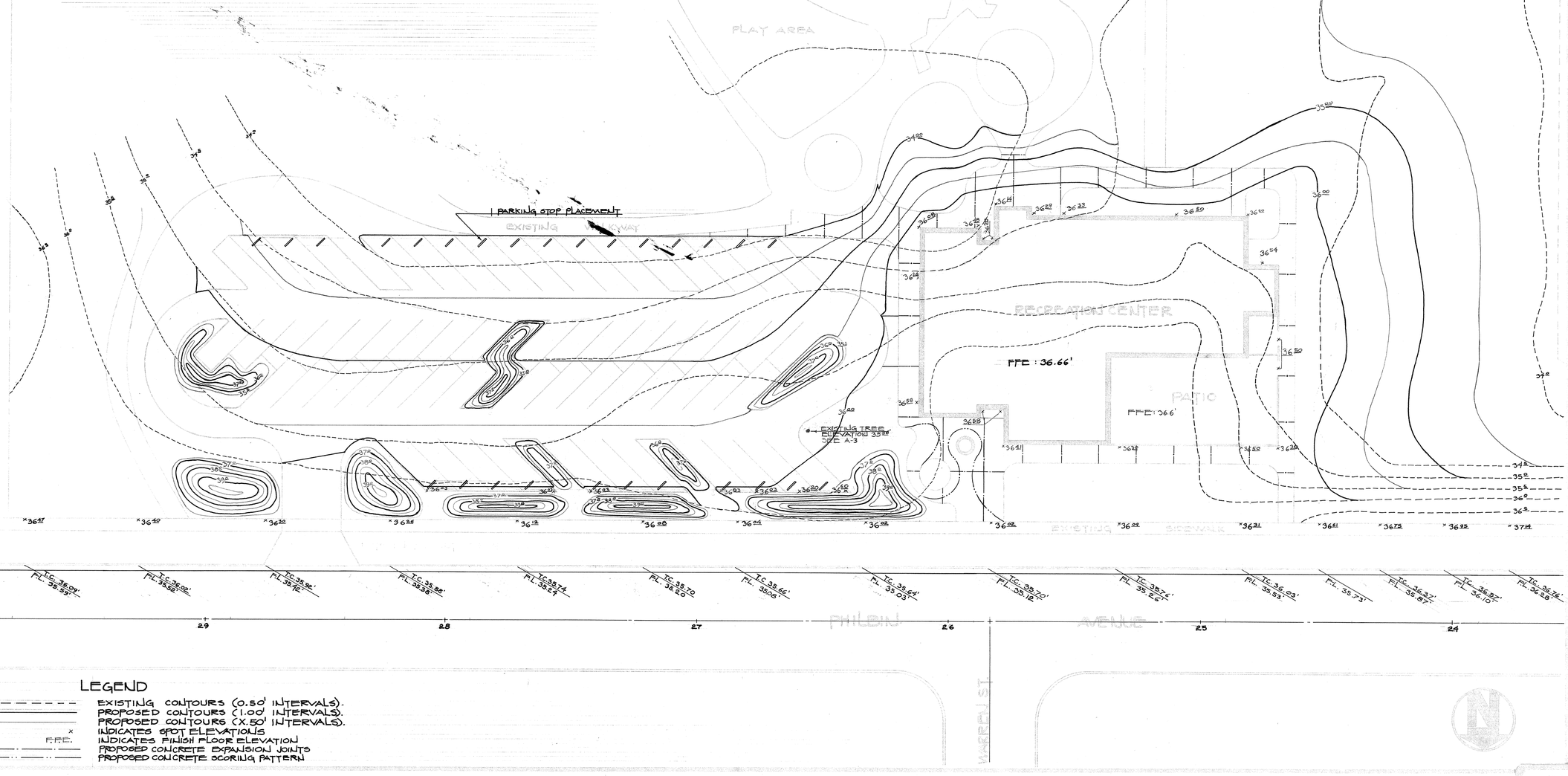

LEGEND

- EXISTING CONTOURS (0.50' INTERVALS).
- PROPOSED CONTOURS (1.00' INTERVALS).
- PROPOSED CONTOURS (X.50' INTERVALS).
- × INDICATES SPOT ELEVATIONS
- F.F.E. INDICATES FINISH FLOOR ELEVATION
- PROPOSED CONCRETE EXPANSION JOINTS
- PROPOSED CONCRETE SCORING PATTERN

GRADING PLAN

1"=20'

3 5

DRAWING NUMBER BR-5

PLAN HOLD CORPORATION • IRVINE, CALIFORNIA

E-106-15

PIT PREPARATION OF TREE & SHRUBS SHALL INCLUDE 25% NITRO HUMUS & 75% TOP SOIL. 20-10-5 AGRIFORM TABLETS (21 GRAM) SHALL BE ADDED AT THE RATE OF '5' TABLETS FOR 24" BOX TREES, '3' TABLETS FOR 15 GAL. TREES, AND '1' FOR THE 5 GALLON SHRUBS.

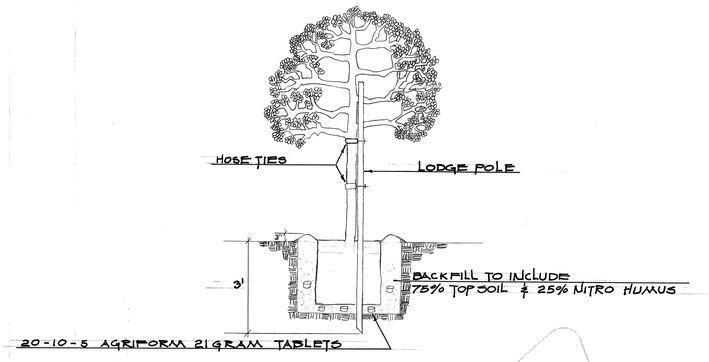

IN ALL GROUNDCOVER AND TURF AREAS CULTIVATE THE SOIL TO A DEPTH OF 4". INCORPORATE THE FOLLOWING SOIL AMENDMENTS AT THE RATE OF: COMMERCIAL FERTILIZER - 20lbs. PER 1000 SQ. FT.; REDWOOD SHAVING (NITROGEN FORTIFIED) - 2 CUBIC YDS. PER 1,000 SQ. FT.

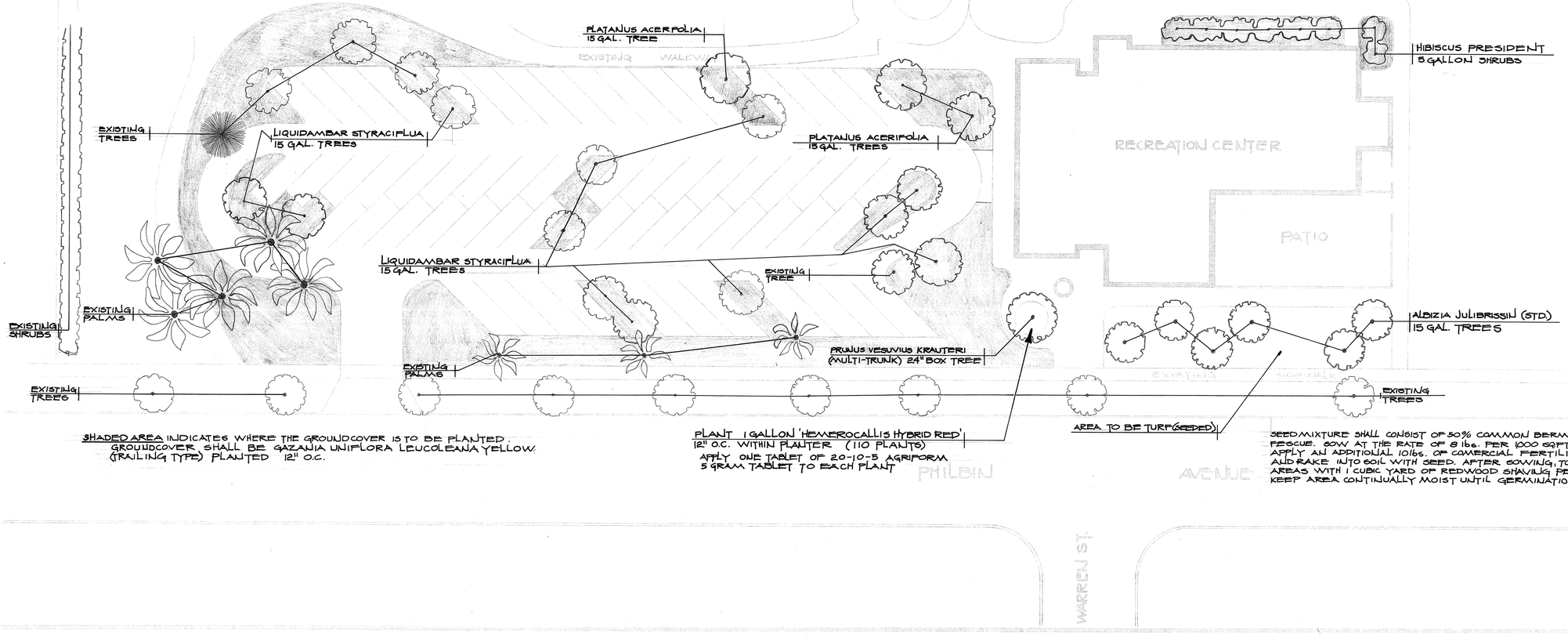

SHADED AREA INDICATES WHERE THE GROUNDCOVER IS TO BE PLANTED. GROUNDCOVER SHALL BE GAZANIA UNIFLORA LEUCOLEANA YELLOW (TRAILING TYPE) PLANTED 12" O.C.

PLANT 1 GALLON 'HEMEROCALLIS HYBRID RED' 12" O.C. WITHIN PLANTER (110 PLANTS)
APPLY ONE TABLET OF 20-10-5 AGRIFORM 5 GRAM TABLET TO EACH PLANT

SEED MIXTURE SHALL CONSIST OF 50% COMMON BERMUDA & 50% RED FESCUE. SOW AT THE RATE OF 8 lbs. PER 1000 SQFT. PRIOR TO SEEDING APPLY AN ADDITIONAL 10lbs. OF COMERCIAL FERTILIZER PER 1000 SQ.FT. AND RAKE INTO SOIL WITH SEED. AFTER SOWING, TOP DRESS LAWN AREAS WITH 1 CUBIC YARD OF REDWOOD SHAVING PER 2,000 SQ FT. KEEP AREA CONTINUALLY MOIST UNTIL GERMINATION.

FLOOD CONTROL CHANNEL R.O.W.

BRY

DRAWING NUMBER

BRYANT PARK
RECREATION CENTER
LANDSCAPING
1550 PHILBIN AVENUE
CITY OF

PLANTING PLAN

1" = 20'

4 5

DRAWING NUMBER

DRAWING NUMBER

DRAWING NUMBER

BR-4

P-106-12

SPRAY HEAD

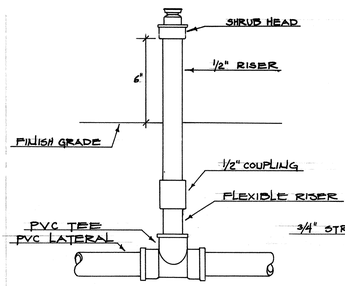

STREAM ROTOR

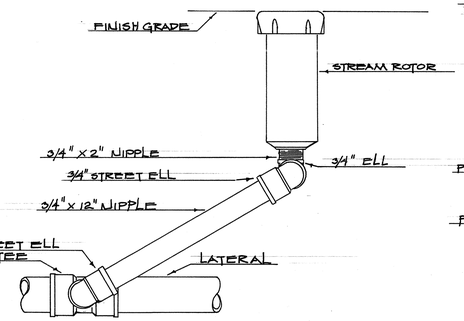

ELECTRIC CONTROL VALVE

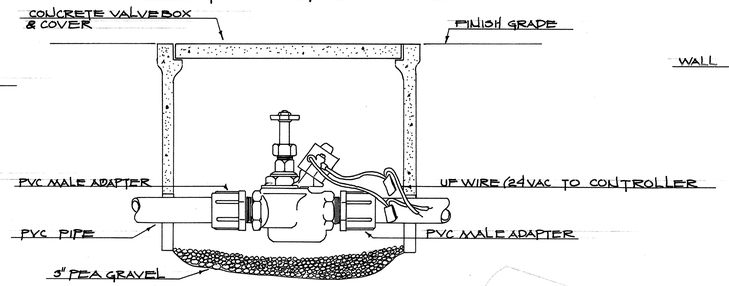

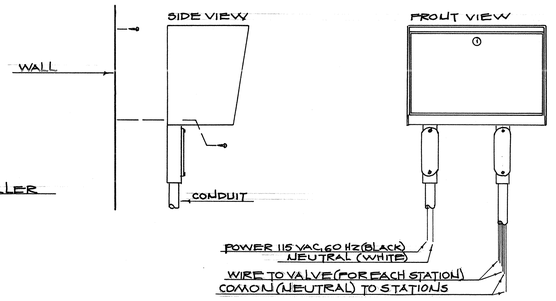

WALL MOUNTED CONTROLLER
MONITOR II #176-06-01 (11 STATION - ELECTRIC)
DUAL PROGRAM

FLOOD CONTROL CHANNEL R.O.W.

SPRINKLER LEGEND

SYMBOL	DESCRIPTION	MANUFACTURER	RAD.	G.P.M.	PRESS
	HALF STREAM ROTOR	TORO # 304-02	24'	0.89	50
	QUARTER " "	" # 308-02	24'	1.67	50
	360° SPRAY HEAD (ON 6" RISER)	TORO # 550-10-16	12'	3.00	25
	270° " " " " "	" # 550-10-12	12'	2.25	25
	180° " " " " "	" # 550-10-08	12'	1.50	25
	135° " " " " "	" # 550-10-06	12'	1.00	25
	90° " " " " "	" # 550-10-06	12'	.75	25
	HALF BUBLER HEAD	TORO # 512-30	5'	1.00	10
	ELECTRIC VALVES (SIZE INDICATED)	TORO # 206			
	ELECTRIC VALVE 3/4"	TORO # 9-2989			
	INDICATE VALVE SIZE &	GPM OF STATION			
C	11 STATION CONTROLLER	TORO # 176-06-01 ELECTRIC			
	CLASS 200 PVC	SIZE INDICATED			

NOTE: ON ANY SPRINKLER HEAD PLACED ON A SLOPE THE HEAD SHALL BE SLANTED HALF-WAY BETWEEN VERTICAL AND RIGHT ANGLE TO THE SLOPE. IT MAY BE ADJUSTED SLIGHTLY TO OBTAIN MAXIMUM PERFORMANCE.

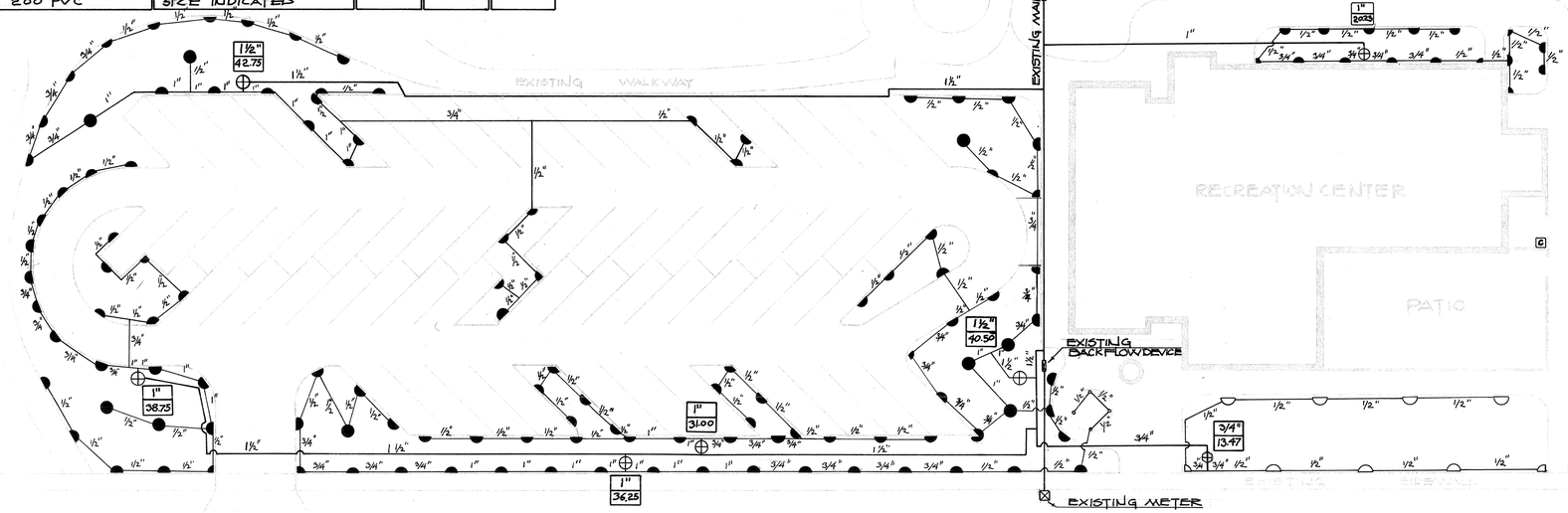

NOTE:
CONTROLLER & VALVE WIRE SIZE SHALL BE #10 FOR COMMON WIRE & #14 FOR CONTROL WIRE.
ALL ELECTRICAL WORK SHALL COMPLY WITH THE REQUIREMENTS OF THE LATEST PREVAILING CODES AND THE CALIFORNIA ELECTRICAL SAFETY ORDERS.
ALL CONDUCTORS SHALL BE 600 V. INSULATED, CONDUIT SHALL COMPLY WITH THE REQUIREMENTS OF THE REQUIREMENTS OF THE UNDERWRITERS LABORATORIES, FITTINGS SHALL BE GALVANIZED.
ALL ABOVE GROUND ELECTRIC UNITS SHALL BE "RAIN TIGHT".
CONTROL WIRE RUNS SHALL WHEREVER POSSIBLE FOLLOW THE NEW SPRINKLER LINE LOCATIONS.
CONTROL WIRES ARE TO BE PLACED AT A DEPTH OF 18".

PHILBIN AVENUE

WARREN ST.

SPRINKLER PLAN

1" = 20'

BRYANT PARK & RECREATION CENTER
LANDSCAPING
7850 PHILBIN AVENUE

DRAWING NUMBER BRY

DRAWING NUMBER

DRAWING NUMBER

DRAWING NUMBER BR-3

5 5

P-106-14