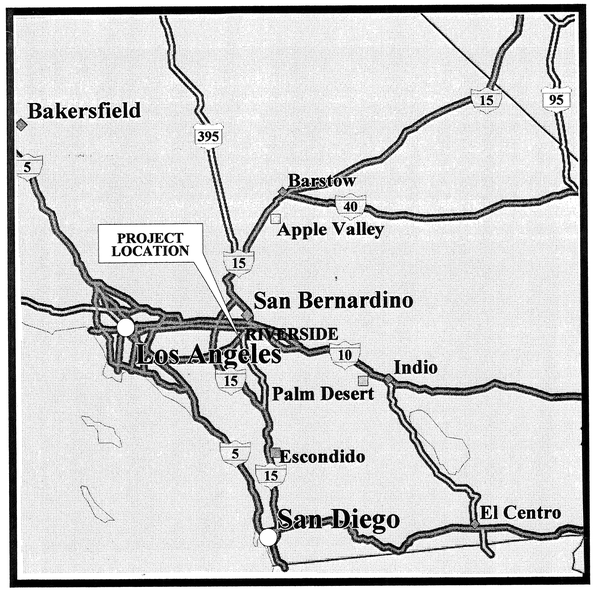

N

Vicinity Map

Scale 1:2,000,000 (at center)
20 Miles
50 KM

N

Location Map

Scale 1:18,750 (at center)
2000 Feet
500 Meters

Bordwell Park

SPORTS AREA LIGHTING
City of Riverside
Riverside, California

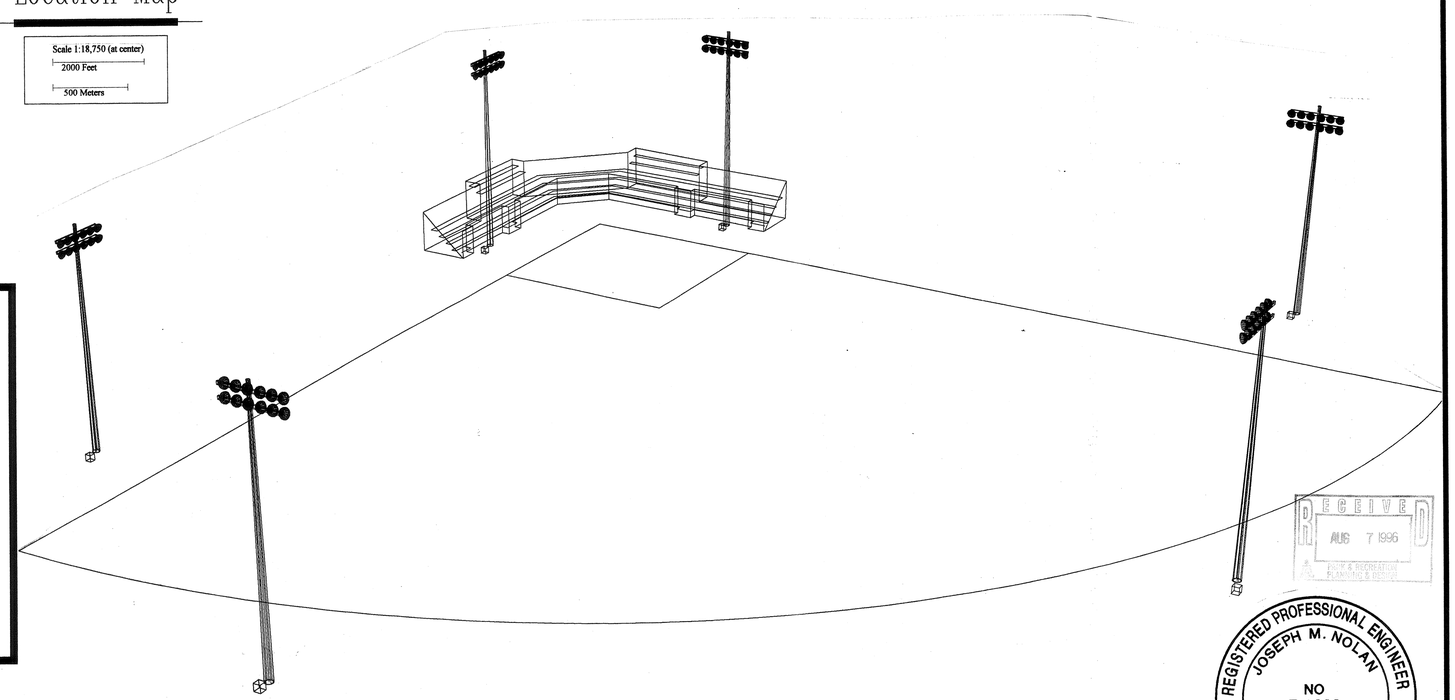

Index

TITLE	SHEET NO.
TITLE SHEET	T-1
ELECTRICAL SITE PLAN	E-1
LUMINAIRE SCHEDULE	E-2
LUMINAIRE DETAILS	E-3
POLE/FOOTING DETAILS	E-4

Conceptual Plan

No Scale

RECEIVED AUG 7 1996 PARK & RECREATION PLANNING & DESIGN

REGISTERED PROFESSIONAL ENGINEER
JOSEPH M. NOLAN
NO E 9333
EXP: SEP 30 1997
ELECTRICAL
STATE OF CALIFORNIA

UNDERGROUND SERVICE ALERT
CALL BEFORE YOU DIG
CALL TOLL FREE
1-800
422-4133
TWO WORKING DAYS BEFORE YOU DIG

© DREAM ENGINEERING INC. 1996

REVISION:	BY

BORDWELL PARK
SPORTS AREA LIGHTING
CITY OF RIVERSIDE
RIVERSIDE, CALIFORNIA

DREAM
ENGINEERING INC
CONSULTING ELECTRICAL ENGINEERS
APPLE VALLEY PALM DESERT
(619)242-3509 (619)773-4478
FAX (619)242-1092

TITLE SHEET

PROJ. #9604051

DATE: 06/10/96

DWG. FILE: BORDWLE2.DWG

T-1

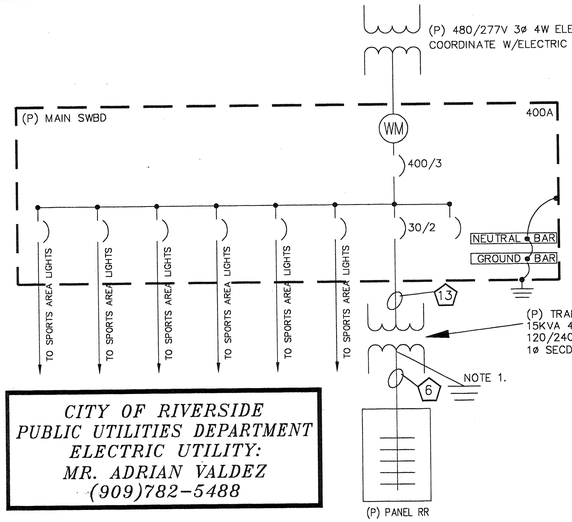

NOTES:

1. BOND TRANSFORMER T1 NEUTRAL & ENCLOSURE. CONNECT TO DRIVEN GROUND ROD USE #6 COPPER CONDUCTORS FOR GROUNDING AND #8 COPPER CONDUCTORS FOR BONDING.
2. REFERENCE SITE PLAN AND A.C. BREAKERS ASSIGNMENTS FOR SIZES OF CIRCUIT BREAKERS, CONDUCTORS & CONDUIT
3. AVAILABLE FAULT CURRENT AT THE SERVICE IS ??,???? AMPERES.
4. ALL SWITCHGEAR SHOWN IS EXISTING & IS TO BE REUSED UNLESS OTHERWISE NOTED. PROVIDE NEW METER PEDESTAL. REF DETAIL.

CITY OF RIVERSIDE
PUBLIC UTILITIES DEPARTMENT
ELECTRIC UTILITY:
MR. ADRIAN VALDEZ
(909)782-5488

SINGLE LINE DIAGRAM 2/E1
NO SCALE

Key Notes

1. COORDINATE EXACT LOCATION, ROUTING AND DISTANCE OF SERVICE LATERAL TRENCH WITH ELECTRICAL UTILITY – CITY OF RIVERSIDE.
2. PULL CONDUCTORS IN (E) CONDUIT TO THIS POINT. PROVIDE NEW CONDUCTORS AND CONDUIT AS SHOWN, FROM THIS POINT ON TO POLE.
3. MOUNT PUSHBUTTON ENCLOSURE ON THIS POLE. REF DETAIL ON SHEET E4.
4. (P) UTILITY PULLBOX 3' X 5'. CONFIRM WITH ELECTRIC UTILITY PRIOR TO ORDERING.
5. (P) TP5 UTILITY TRANSFORMER PAD. CONFIRM WITH ELECTRIC UTILITY PRIOR TO ORDERING.
6. CONFIRM WITH ELECTRIC UTILITY PRIOR TO ORDERING.
7. INTERCEPT (E) CONDUIT. (P) PULLBOX, EXTEND BRANCH CIRCUIT CONDUCTORS AND CONDUIT TO POLE AS SHOWN.
8. (P) 4" THICK CONCRETE PAD 2500PSI FROM (E) SIDEWALK TO (E) CURB AND 12" BEYOND (E) SERCICE POLE AND (P) UTILITY PULLBOX.

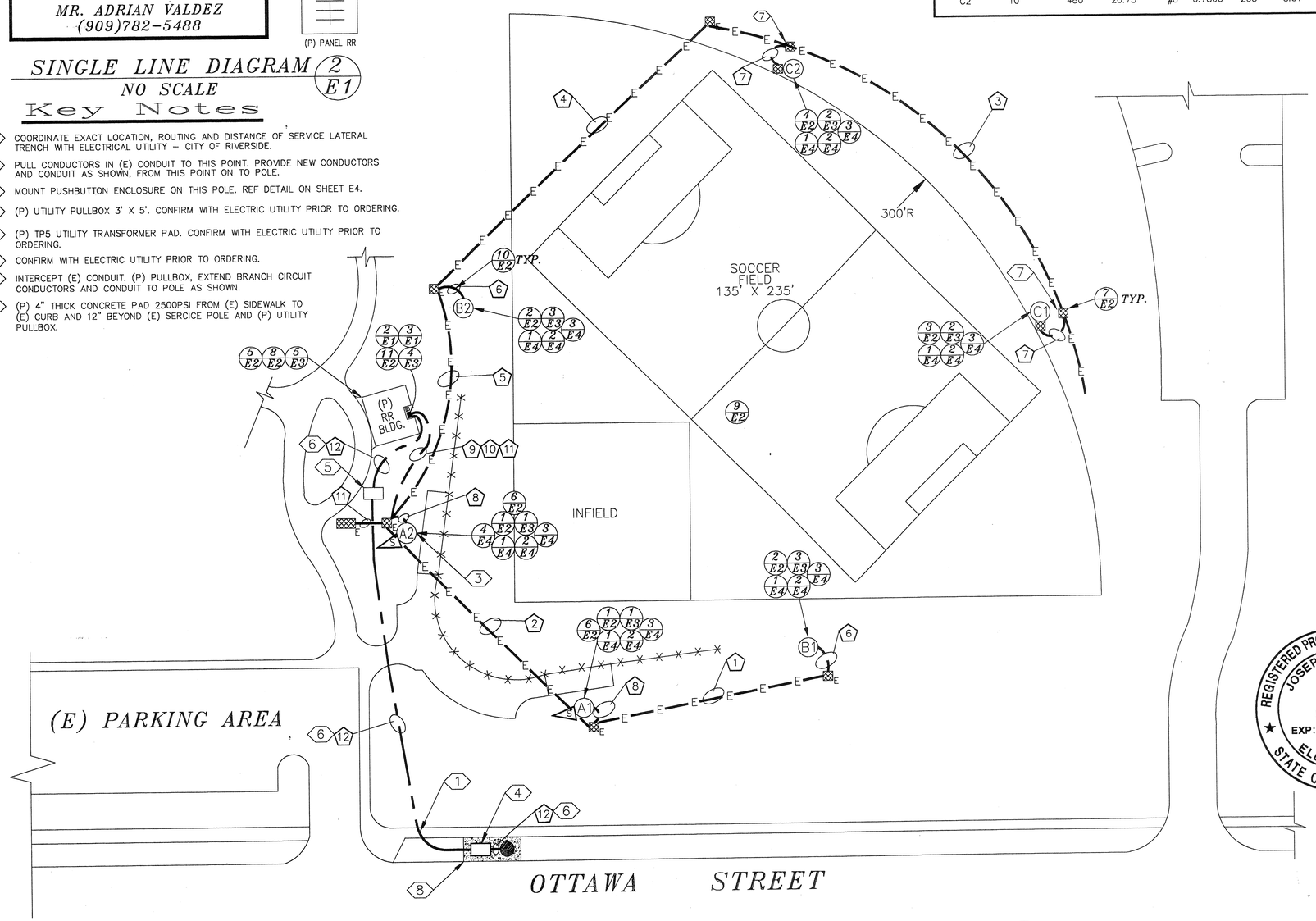

ELECTRICAL SITE PLAN 1/E1
SCALE 1" = 30'

CONDUCTOR SCHEDULE

RUN	ø & NEUTRAL	GROUNDING	CONDUIT	% FILL
1	(P) 3#6	(P)1#10	(E)1"	20.24
2	(P) 3#6 5#12	(P)1#10	(E)1"	27.05
3	(P) 3#8	(P)1#10	(E)1"	15.15
4	(P) 6#8	(P)1#10	(E)1"	28.10
5	(P) 3#6 6#8	(P)1#10	(E)1-1/4"	26.53
6	(P) 3#6	(P)1#10	(P)1"	20.24
7	(P) 3#8	(P)1#10	(P)3/4"	24.58
8	(P) 9#12	(P)1#12	(P)3/4"	22.30
9	(P) 6#6 6#8 6#12	(P)1#10	(P)1-1/2"	30.58
10	(P) 6#12	(P)1#12	(P)1/2"	27.30
11	(P) 3/16" PULLROPE		(P)1"	--
12	----		(P)4" DB	--
13	(P) 2#10	(P)1#10	(P)1/2"	18.40

VOLTAGE DROP CALCULATIONS

POLE #	FIXTURE QTY	VOLTAGE	AMPS	CONDR SIZE	Rac	DIST	VOLT DROP	%
A1	6	480	11.59	#12	2.0000	235	10.89	2.27
A2	6	480	11.59	#12	2.0000	60	2.78	0.58
B1	12	480	23.18	#6	0.4900	345	7.84	1.63
B2	12	480	23.18	#6	0.4900	50	1.14	0.24
C1	10	480	20.73	#8	0.7800	440	14.23	2.96
C2	10	480	20.73	#8	0.7800	265	8.57	1.79

ELECTRICAL NOTES & SYMBOLS

1. ALL WORK TO BE DONE IN ACCORDANCE WITH NATIONAL ELECTRICAL CODE CODE 1996 EDITION
2. ALL UNDERGROUND OUTSIDE BRANCH CIRCUIT AND FEEDER CIRCUITS ARE TO BE RUN IN NONMETALLIC CONDUIT SCHEDULE 40.
3. ALL ELECTRICAL CONDUCTORS ARE TO BE THWN COPPER.
4. ALL ELECTRICAL SYMBOLS PER ANSI Y32.9 1972. REAFFIRMED 1989.
5. ALL REMOVED SOD MUST BE REPLACED WITH SOD TO ORIGINAL CONDITION.
6. ANY CUT SEWER OR SPRINKLER MUST BE REPLACED BY CONTRACTOR AT HIS EXPENSE.
7. UTILITIES AND LIGHTING EQUIPMENT ARE DRAWN DIAGRAMMATICALLY. SCALED DIMENSIONS ARE APPROXIMATE ONLY. BEFORE PROCEEDING WITH WORK, CAREFULLY CHECK AND VERIFY DIMENSIONS, IMMEDIATELY NOTIFY ENGINEER OF DISCREPANCIES BETWEEN DRAWINGS OR SPECIFICATIONS AND ACTUAL CONDITIONS, ALTHOUGH SIZES AND LOCATIONS OF EQUIPMENT ARE DRAWN TO SCALE WHEREVER POSSIBLE, IT IS NOT WITHIN SCOPE OF THE DRAWINGS TO SHOW NECESSARY OFFSETS, OBSTRUCTIONS, OR SITE CONDITIONS. THE CONTRACTOR WILL BE RESPONSIBLE TO INSTALL WORK IN SUCH A MANNER THAT IT WILL CONFIRM TO SITE CONDITIONS, COMPLETE AND IN GOOD WORKING ORDER.
8. WITH REFERENCE TO ELECTRICAL UTILITIES THIS IS A PRELIMINARY PLAN ONLY, AND IS NOT BE USED FOR CONSTRUCTION PURPOSES.
9. SWITCHGEAR SHOP DRAWINGS TO BE PROVIDED TO THE ELECTRICAL ENGINEER FOR APPROVAL PRIOR TO FABRICATION.
11. — — — CONDUCTORS W/GROUND RUN UNDERGROUND. REF SITE PLAN FOR SIZES OF CONDUCTORS AND CONDUITS.
12. ——— CONDUCTORS W/GROUND RUN CONCEALED IN CEILING OR WALL. REF PANEL ASSIGNMENTS FOR WIRE SIZES.
13. 1/E1 — INDICATES DETAIL # / INDICATES SHEET #
14. — - — SERVICE LATERAL TRENCH
15. LCC — LIGHTING CONTACTOR COIL.
16. LIGHTING CONTACTOR – CONTACTS. N.O. – LETTERS INDICATE COIL CONTROLLING CONTACTS.
17. A1 — POLE MOUNTED LUMINAIRE. LETTER INDICATES STYLE AS INDICATED ON LUMINAIRE SCHEDULE.
18. EXISTING ELECTRIC UTILITY SERVICE POLE.
19. TC — TIME CLOCK.
20. (P) — PROPOSED. TO BE PROVIDED BY CONTRACTOR, UNLESS OTHERWISE NOTED.
21. (E) — EXISTING. TO BE REUSED, UNLESS OTHERWISE NOTED.
22. E.C. — ELECTRICAL CONTRACTOR.
23. UNDERGROUND CONCRETE PULLBOX #3-1/2 (17.5"X12.5"X12.5" PREFAB CONCRETE WITH TRAFFIC COVER WHERE SUBJECT TO VEHICULAR TRAFFIC.
24. (E) UNDERGROUND CONCRETE PULLBOX #3-1/2 (17.5"X12.5"X12.5" PREFAB CONCRETE WITH TRAFFIC COVER WHERE SUBJECT TO VEHICULAR TRAFFIC.
25. LUMINAIRE MOUNTED ON SPORTS AREA POLE AIM IN DIRECTION DIRECTION OF ARROW. REF LUMINAIRE SCHEDULE FOR PN, BALLAST VOLTAGE ETC. REF POLE DETAIL ON E-4 FOR MOUNTING.

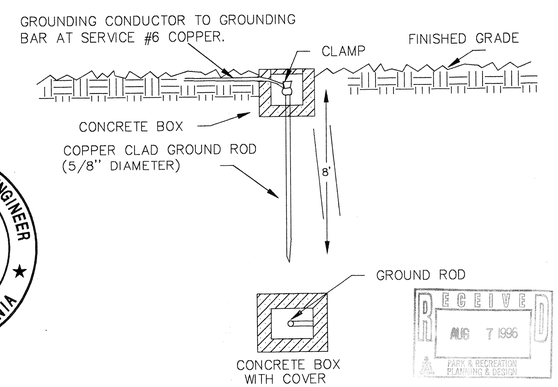

DRIVEN GROUND ROD DETAIL 3/E1
NO SCALE

REGISTERED PROFESSIONAL ENGINEER
JOSEPH M. NOLAN
NO E 9333
EXP: SEP 30 1997
ELECTRICAL
STATE OF CALIFORNIA

RECEIVED
AUG 7 1996
PARK & RECREATION PLANNING & DESIGN

UNDERGROUND SERVICE ALERT
CALL TOLL FREE
1-800
422-4133
TWO WORKING DAYS BEFORE YOU DIG

© DREAM ENGINEERING INC. 1996

REVISION: BY:

BORDWELL PARK SPORTS AREA LIGHTING CITY OF RIVERSIDE, CALIFORNIA

DREAM
ENGINEERING INC.
CONSULTING ELECTRICAL ENGINEERS
APPLE VALLEY PALM DESERT
(619)242-3399 (619)773-4478
FAX (619)242-1092

ELECTRICAL SITE PLAN

PROJ. #9604051
DATE: 06/10/96
DWG. FILE: BORDWLE2.DWG

E-1

LUMINAIRE SCHEDULE

DETAIL NAME	STYLE	MFGR	PART NO.	LAMPS	QTY	DESCRIPTION	MH FIELD	POLE FOOT DETAIL	EPA	MH GROUND	POLE LENGTH	BURIAL DEPTH	GROUND ELEV.
1/E2	A 1,2	CROUSE-HINDS	1500-6P	6X1500WMHX480V		6 LAMP LUMINAIRE ASSEMBLY	70'	1/E4	19.2	70'	70'	1/E4	0'
2/E2	B 1,2	CROUSE-HINDS	1500-12P	12X1500WMHX480V		12 LAMP LUMINAIRE ASSEMBLY	70'	1/E4	38.4	70'	70'	1/E4	0'
3/E2	C 1	CROUSE-HINDS	1500-10P	10X1500WMHX480V		10 LAMP LUMINAIRE ASSEMBLY	70'	1/E4	32	70'	70'	1/E4	0'
4/E2	C 2	CROUSE-HINDS	1500-10P	10X1500WMHX480V		10 LAMP LUMINAIRE ASSEMBLY	65'	1/E4	32	70'	70'	1/E4	-5'
5/E2	D 1	SPAULDING	MRK-70-HPS	1X70WHPSX120V		WALL MOUNTED LUMINAIRE REF DETAIL 5/E3	N/A	N/A	N/A	REF DETAIL	N/A	N/A	N/A
6/E2	S 1	CROUSE-HINDS	MVD-4LEC-277-PC-SF-VS-ML5541	1X400WHPSX277V		POLE MOUNTED SECURITY LUMINAIRE. REF DETAIL ON SHEET E4 FOR MOUNTING.	30'	N/A	3.1	30'	N/A	N/A	N/A
12/E2	n	KENNAL	7270	1X40WFLX120V		CIELING MOUNTED FLOURESCENT FIXTURE W/ PRISMATIC LENSE. MOUNT TO 4X BEAMS.	N/A	N/A	N/A	N/A	N/A	N/A	N/A

A.C. BREAKER ASSIGNMENTS

MANF	SQUARE D	PANEL	BASEBALL
VOLTS	277/480	LOCATION	– REF SITE PLAN
PHASE	3	FEEDER	– REF. A.C. SINGLE LINE
WIRE	4	AMPS	400
M.O.C.D.	400 AMPS	MOUNTING	– PAD

CKT #	DESCRIPTION/ LOCATION	LOAD TYPE	VOLT AMPS	PHASE	CKT BKR AMPS	POLES	BCCO RKON NTND CHDR	GCO RON NDD DR
1	POLE A1 (6)	LIGHTS	3210	A	20	3	#12	#12
2	POLE A2 (6)	LIGHTS	3210	A	20	3	#12	#12
3	POLE A1 (6)	LIGHTS	3210	B	--		#12	
4	POLE A2 (6)	LIGHTS	3210	B	--		#12	
5	POLE A1 (6)	LIGHTS	3210	C	--		#12	
6	POLE A2 (6)	LIGHTS	3210	C	--		#12	
7	POLE B1 (12)	LIGHTS	6420	A	40	3	#6	#10
8	POLE B2 (12)	LIGHTS	6420	A	40	3	#6	#10
9	POLE B1 (12)	LIGHTS	6420	B	--		#6	
10	POLE B2 (12)	LIGHTS	6420	B	--		#6	
11	POLE B1 (12)	LIGHTS	6420	C	--		#6	
12	POLE B2 (12)	LIGHTS	6420	C	--		#6	
13	POLE C1 (10)	LIGHTS	5350	A	30	3	#8	#10
14	POLE C2 (10)	LIGHTS	5350	A	30	3	#8	#10
15	POLE C1 (10)	LIGHTS	5350	B	--		#8	
16	POLE C2 (10)	LIGHTS	5350	B	--		#8	
17	POLE C1 (10)	LIGHTS	5350	C	--		#8	
18	POLE C2 (10)	LIGHTS	5350	C	--		#8	
19	SECURITY LIGHTS	LIGHTS	930	A	20	1	#12	#12
20	TIME CLOCK & COIL	LIGHTS	500	A	20	1	#12	#12
21	TRANSFORMER T1 (15KVA)	MISC	8250	B	30	2	#10	#10
22	SPARE			B	20	1		
23	TRANSFORMER T1 (15KVA)	MISC	8250	C	--		#10	
24	SPARE			C	20	1		
25	SPARE			A	20	1		
26	SPARE			A	20	1		
27	SPARE			B	20	1		
28	SPARE			B	20	1		
29	SPARE			C	20	1		
30	SPARE			C	20	1		

PROPOSED TOTAL VOLT AMPS	107240
FUTURE TENNIS LIGHTING	12000
PROPOSED AMPS/LEG	143
PROPOSED BUSS RATING	400

NOTE: 1. MAIN OVER CURRENT DEVICE TO BE 14KAIC.
2. ALL BRANCH CIRCUIT BREAKERS TO BE 10KAIC.

MANF	SQUARE D
VOLTS	120/240
PHASE	1
WIRE	3
M.O.C.D.	60 AMPS

PANEL	RR
LOCATION	– REF SITE PLAN
FEEDER	– REF. A.C. SINGLE LINE
AMPS	100
MOUNTING	– RECESSED

CKT #	DESCRIPTION/ LOCATION	LOAD TYPE	VOLT AMPS	PHASE	CKT BKR AMPS	POLES	BCCO RKON NTND CHDR	GCO RON NDD DR
1	BUILDING EXTERIOR	LITES	500	A	20	1	#12	#12
2	BUILDING INTERIOR	LITES	800	A	20	1	#12	#12
3	HAND DRYER MENS	MISC	1020	C	20	1	#12	#12
4	HAND DRYER WOMEN'S	MISC	1020	C	20	1	#12	#12
5	SPARE			A	20	1		
6	SPARE			A	20	1		
7	OUTLET MEN'S	RECEPT	180	C	20	1	#12	#12
8	OUTLET WOMEN'S	RECEPT	180	C	20	1	#12	#12
9	OUTLET CHASE	RECEPT	180	A	20	1	#12	#12
10	OUTLET SWITCHBOARD	RECEPT	180	A	20	1	#12	#12
11	IRRIGATION CONTROLLER	MISC	500	C	20	1	#12	#12
12	ELAPSED TIME METER.	MISC	400	C	20	1	#12	#12
13	SPARE			A	20	1		
14	SPARE			A	20	1		
15	SPARE			C	20	1		
16	SPARE			C	20	1		
17	SPARE			A	20	1		
18	SPARE			A	20	1		
19	SPARE			C	20	1		
20	SPARE			C	20	1		

PROPOSED TOTAL VOLT AMPS	4960
PROPOSED AMPS/LEG	21
PROPOSED BUSS RATING	100

NOTE: 1. MAIN OVER CURRENT DEVICE TO BE 10KAIC.
2. ALL BRANCH CIRCUIT BREAKERS TO BE 10KAIC.

INFIELD AREA AVERAGE MAINTAINED FOOTCANDLES	52.67
MAX/MIN RATIO	1.61:1
LIGHT LOSS FACTOR	.800

SOCCER FIELD AVERAGE MAINTAINED FOOTCANDLES	33.2
MAX/MIN RATIO	3.52:1
LIGHT LOSS FACTOR	.800

OUTFIELD AREA AVERAGE MAINTAINED FOOTCANDLES	32.04
MAX/MIN RATIO	3.78:1
LIGHT LOSS FACTOR	.800

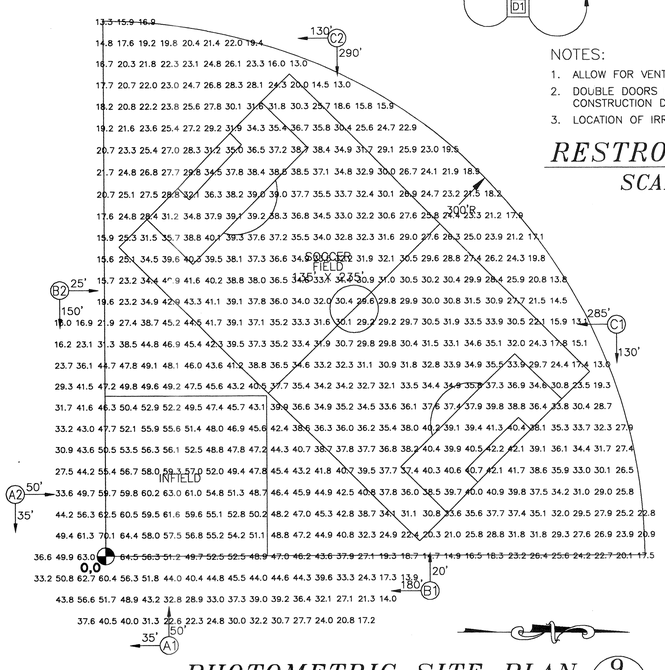

PHOTOMETRIC SITE PLAN 9/E2
SCALE – 1"= 40'

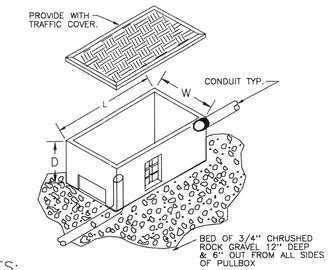

NOTES:
1. REFERENCE SPECIFICATIONS FOR ADDITIONAL INFORMATION ON PULLBOX.
2. REFERENCE ELECTRICAL SITE PLAN FOR SIZE OF CONDUITS
3. DIMENSIONS SHOWN FOR PULLBOX ARE TO BE PROVIDED UNLESS INDICATED OTHERWISE ON ELECTRICAL SITE PLAN NOTES.
4. PROVIDE SCHEDULE 80 SWEEPS INTO PULLBOX.

PULLBOX INSTALLATION DETAIL 7/E2
NO SCALE

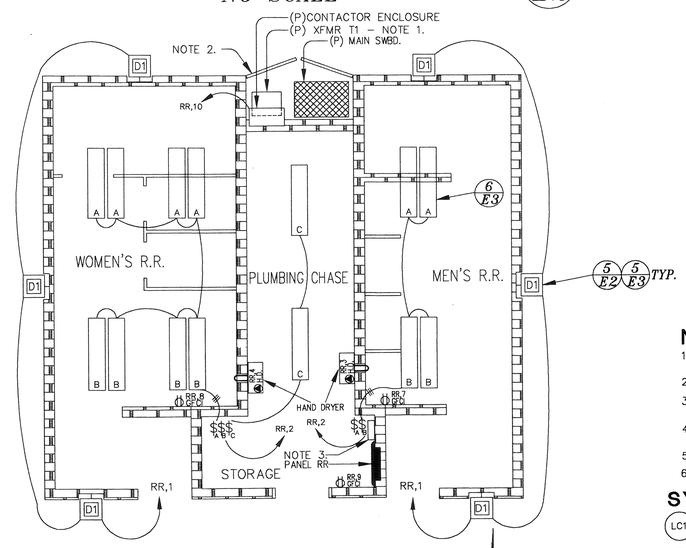

NOTES:
1. ALLOW FOR VENTILATION PER MANUF. INSTRUCTIONS.
2. DOUBLE DOORS MOUNTED TO RR BUILDING. REF RR CONSTRUCTION DETAILS.
3. LOCATION OF IRRIGATION CONTROLLER BY OTHERS.

RESTROOM LAYOUT 8/E2
SCALE 1/4"=1'

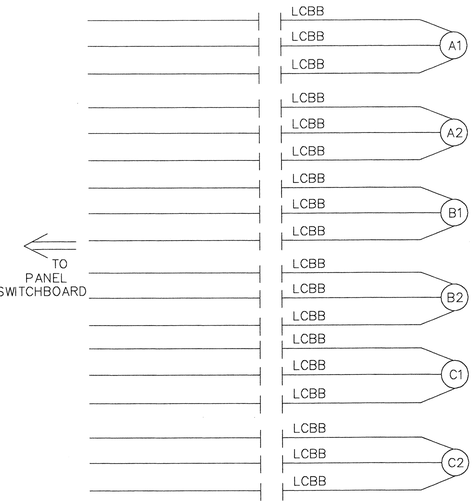

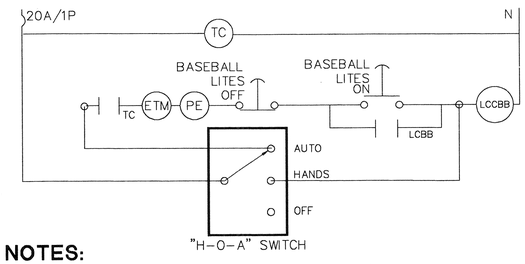

NOTES:
1. ALL CONTROL WIRING TO BE #12THWN COPPER, UNLESS OTHERWISE INDICATED, IN 1/2"C WHERE EXPOSED.
2. RATING OF CONTACTORS TO MATCH CIRCUIT BREAKERS.
3. MOUNT TIMECLOCK, CONTACTORS , H-O-A SWITCH IN SEPARATE HINGED ENCLOSURE REF SWITCHBOARD ELEVATION.
4. DIAGRAM IS DIAGRAMMATICAL. NUMBER OF CONTACTS TO MATCH NUMBER OF POLES ON BRANCH CIRCUIT BREAKER.
5. INSTALL PUSHBUTTON ON POLE REF SITE PLAN AND DETAIL.
6. MOUNT PHOTO CELL ON ROOF DIRECTLY ABOVE CONTROL ENCLOSURE.

SYMBOLS:

- LC1 — LIGHTING CONTACTOR COIL FIELD LIGHTS.
- PE — PHOTO-ELECTRIC CELL
- ETM — ELAPSED TIME METER. 99,999.9 HRS 120V NON-RESETABLE FUSED SQUARE D, G.E. OR CITY APPROVED EQUAL.
- PUSH BUTTON MOMENTARY CONTACT – ON
- PUSH BUTTON MOMENTARY CONTACT – OFF
- LC1 — LIGHTING CONTACT CONTROLLED BY LC1.

LIGHTING CONTROL DIAGRAM 11/E2
NO SCALE

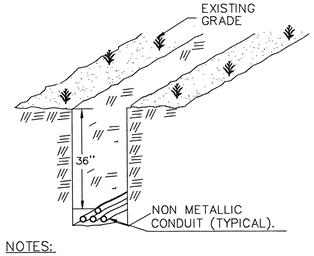

NOTES:
1. LAY CONDUIT, FILL, COMPACT TO 90.% MATCH SURROUNDING.
2. AREAS SUBJECT TO HEAVY VEHICULAR TRAFFIC, SUCH AS THOROUGHFARES, SHALL HAVE A MINIMUM COVER OF 36 INCHES.

BRANCH CIRCUIT TRENCH DETAIL 10/E2
NO SCALE

REGISTERED PROFESSIONAL ENGINEER
JOSEPH M. NOLAN
NO E 9333
EXP: SEP 30 1997
ELECTRICAL
STATE OF CALIFORNIA

UNDERGROUND SERVICE ALERT
CALL BEFORE YOU DIG
CALL TOLL FREE
1-800
422-4133
TWO WORKING DAYS BEFORE YOU DIG

© DREAM ENGINEERING INC. 1996

REVISION:	BY

BORDWELL PARK SPORTS AREA LIGHTING CITY OF RIVERSIDE RIVERSIDE, CALIFORNIA

DREAM ENGINEERING INC
CONSULTING ELECTRICAL ENGINEERS
APPLE VALLEY (619)242-3500 EST. 1978
(619)773-4478
FAX (619)242-1092

LUMINAIRE SCHEDULE

PROJ.#9604051
DATE: 06/10/96
DWG. FILE: BORDWLE2.DWG

E-2

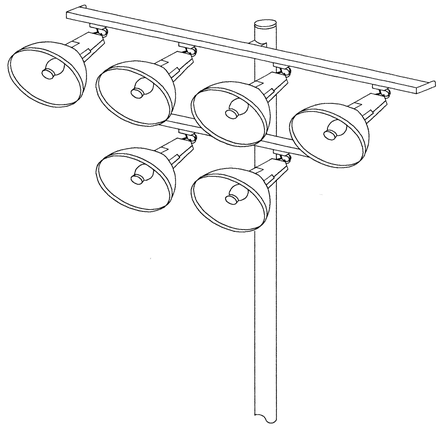

6P LUMINAIRE DETAIL (1/E3)
NO SCALE

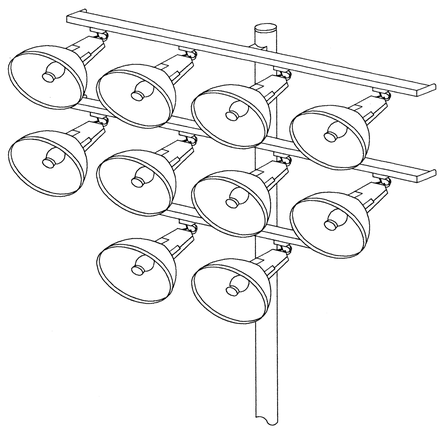

10P LUMINAIRE DETAIL (2/E3)
NO SCALE

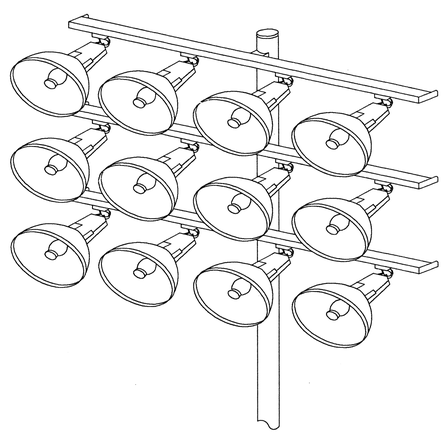

12P LUMINAIRE DETAIL (3/E3)
NO SCALE

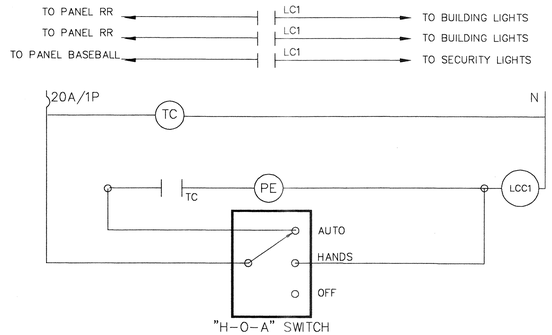

NOTES:
1. ALL CONTROL WIRING TO BE #12THWN COPPER IN 1/2"C WHERE EXPOSED.
3. RATINGS OF CONTACTORS TO MATCH CIRCUIT BREAKER.
4. MOUNT TIMECLOCK AND CONTACTORS IN CONTROL ENCLOSURE. REF DETAIL.
5. MOUNT PHOTO CELL IN ROOF DIRECTLY ABOVE CONTROL ENCLOSURE.
6. MOUNT ALL Hands – Off – Auto (H-O-A) SWITCHES IN CONTROL ENCLOSURE.

CONTROL DIAGRAM – EXTERIOR LIGHTING (7/E3)
NO SCALE

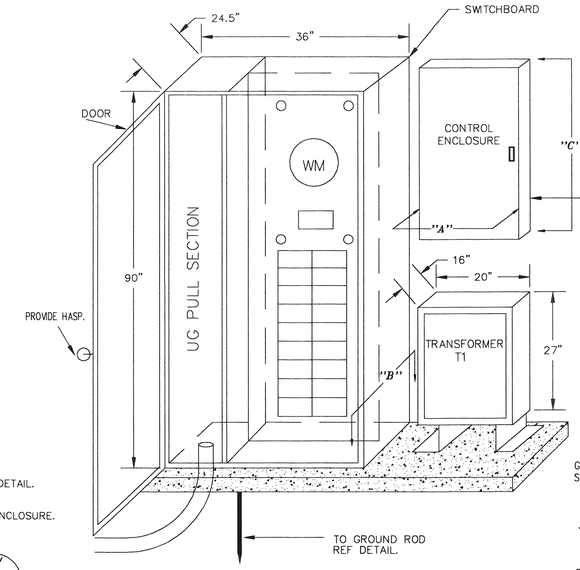

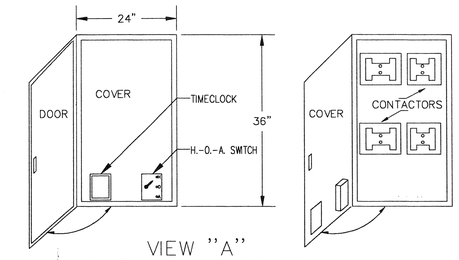

VIEW "A"
CONTROL ENCLOSURE

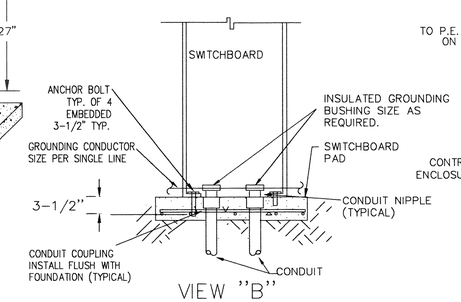

VIEW "B"
SWITCH BOARD STUB-UP & GROUNDING

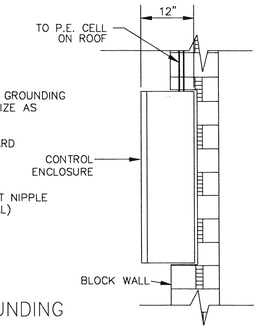

VIEW "C"
WALL MOUNTING OF CONTROL ENCLOSURE

RR BUILDING CONSTRUCTED
NOTES:
1. SWITCHBOARD TO BE SECURED TO BUILDING AND PAD WITH 3/8" ANCHOR BOLTS ASTM A325 AT EACH CORNER.
2. WEIGHT OF SWITCHBOARD 999 LBS.
3. ALLOW FOR DOOR SWING
4. ALL SWITCHGEAR SHOWN TO BE ENCLOSED IN DOUBLE DOORS ATTACHED TO RR BUILDING. REF FLOOR PLANS.
5. ALL SWITCHGEAR SHOWN TO BE IN NEMA 3R ENCLOSURES.

RR BUILDING NOT CONSTRUCTED
NOTES:
1. (P) CONCRETE PAD 4" DEEP EXTEND 4" ON ALL SIDES 2500P.S.I. WITH #3 REBAR @12" O.C. BOTH WAYS, REBAR TO BE ASTM 615 GRADE 60.
2. CONTROL ENCLOSURE AND TRANSFORMER TO BE MOUNTED IN SECTION #2 OF SWITCHBOARD. SQUARE D QUOTE #1, BORDWELL PARK CONTRACTOR TO FURNISH & INSTALL CONTROL ENCLOSURE AND TRANSFORMER.

SWITCHBOARD/CONTROL ENCLOSURE MOUNTING DETAIL (4/E3)
NO SCALE

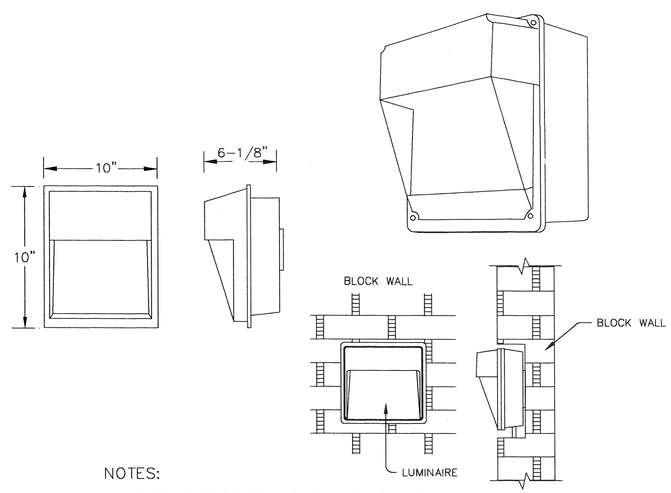

NOTES:
1. FIXTURE TO BE SPAULDING MRK-70-HPS 70WATT HPS WITH 120VOLT BALLAST.
2. PROVIDE WITH PHOTOELECTRIC CONTROL
3. CONTRACTOR TO PROVIDE NECESSARY HARDWARE TO MOUNT FIXTURE TO WALL.
4. FINISH – BAKED ON ENAMEL PAINT IN DARK BRONZE
5. MOUNT FIXTURE TO WALL AT +8FT (TOP OF FIXTURE).

FIXTURE D1 WALL MOUNTING DETAIL (5/E3)
NO SCALE

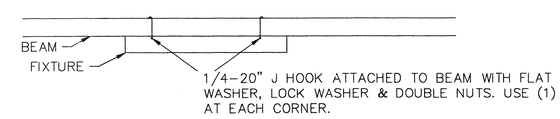

SURFACE MOUNT TO BEAM

DETAIL – HANGING OF FLUORESCENT FIXTURE. (6/E3)
NO SCALE

REGISTERED PROFESSIONAL ENGINEER
JOSEPH M. NOLAN
NO E 9333
EXP: SEP 30 1997
ELECTRICAL
STATE OF CALIFORNIA

UNDERGROUND SERVICE ALERT
CALL BEFORE YOU DIG
CALL TOLL FREE
1-800
422-4133
TWO WORKING DAYS BEFORE YOU DIG

© DREAM ENGINEERING INC. 1996

REVISION:	BY

BORDWELL PARK SPORTS AREA LIGHTING CITY OF RIVERSIDE, CALIFORNIA

DREAM ENGINEERING INC.
CONSULTING ELECTRICAL ENGINEERS
APPLE VALLEY, PALM DESERT
(619)242-3369 (619)773-4478
FAX (619)242-1092

LUMINAIRE DETAILS

PROJ. #9604051
DATE: 06/10/96
DWG. FILE: BORDWLE2.DWG

E-3

POLE DATA

MANUFACTURER	CATALOG NUMBER	POLES	"A" LENGTH	WEIGHT LBS	MAX EPA	SHAFT SECTIONS		WALL THK.	YIELD STRENGTH	BASE PLATE	ANCHOR BOLTS	NOTES:
WHITCO POLE CO.	103-70-14.5T	A1,A2	70'	1631	40.0	TOP	9.5"X5.06"X31.72'	.1793"	55,000 PSI	ROUND 2"X 25" W/21"B.C.	(6)1-1/4" X60"	CONTACT: MR. JIM PRITCHARD WHITCO POLE CO. (800)433-7753
						MID	N/A					
						BOT.	14.5"X8.83"X40.54'	.1875"	65,000 PSI			
WHITCO POLE CO.	103-70-14.5T	B1,B2	70'	1631	40.0	TOP	9.5"X5.06"X31.72'	.1793"	55,000 PSI	ROUND 2"X 25" W/21"B.C.	(6)1-1/4" X60"	CONTACT: MR. JIM PRITCHARD WHITCO POLE CO. (800)433-7753
						MID	N/A					
						BOT.	14.5"X8.83"X40.54'	.1875"	65,000 PSI			
WHITCO POLE CO.	103-70-14.5T	C1,C2	70'	1631	40.0	TOP	9.5"X5.06"X31.72'	.1793"	55,000 PSI	ROUND 2"X 25" W/21"B.C.	(6)1-1/4" X60"	CONTACT: MR. JIM PRITCHARD WHITCO POLE CO. (800)433-7753
						MID	N/A					
						BOT.	14.5"X8.83"X40.54'	.1875"	65,000 PSI			

POLE & FOOTING NOTES:

1. CONCRETE SHALL HAVE A MIN. COMPRESSIVE STRENGTH OF 3000 PSI AT 29 DAYS, AGGREGATE 1-1/2" MAX.
2. REINFORCING STEEL TO BE ATSM A-615 GRADE 60.
3. POLES SHALL BE EQUIPPED WITH OVAL 4" X 6-1/2". LUG & COVER PLATE APPROX 8" ABOVE BASE PLATE AND 2" DIAMETER STANDARD STEEL COUPLING LOCATED AT TOP OF POLE.
4. ALLOWABLE LATERAL SOIL PRESSURE 100PSF FT. OF DEPTH BEGINNING 1 FT. BELOW GROUND SURFACE SOIL TYPE CLASS 5 SILTY CLAY.
5. ALL WELDING SYMBOLS PER AMERICAN WELDING SOCIETY STANDARD WELDING SYMBOLS.
6. IF GROUND WATER OBSERVED WHILE DIGGING FOOTING, CONTRACTOR IS TO STOP IMMEDIATELY AND NOTIFY ENGINEER.
7. PROVIDE MECHANICAL VIBRATION FOR FULL DEPTH OF CONCRETE PILES.
8. PROVIDE PLYWOOD COLLAR AROUND THE HOLE AT TOP OF EXCAVATION TO PREVENT DIRT FROM ENTERING.
9. THE HOLE SHALL BE DRY WHEN POURING. INSPECTOR SHALL INSPECT FOUNDATION PRIOR TO POURING.
10. PLACE CONCRETE IN ONE CONTINUOUS OPERATION. CONCRETE SHALL BE PLACED IN THE SAME DAY AS THE COMPLETION OF DRILLING. POUR CONCRETE AGAINST UNDISTURBED SOIL.
11. CONTRACTOR IS TO SUBMIT SHOP DRAWINGS PRIOR TO START OF CONSTRUCTION SHOWING ALL POLE DIMENSIONS. BEFORE THIS SUBMISSION CONTRACTOR SHALL HAVE DETERMINED & VERIFIED ALL DIMENSIONS ARE COMPATIBLE FOR PROPER INSTALLATION OF FOOTING, POLES, LUMINAIRES, BALLAST BOXES, SPEAKER ETC.

POLE SPECIFICATION:

1. MATERIALS:
   BASE PLATE AND FLANGES: ASTM A-36
   SHAFT: STEEL 55,000 P.S.I. YIELD ASTM A595 GRADE A.
   ANCHOR BOLTS: ASTM A-36 (79,000 MOD. YIELD)
   ANCHOR PLATE: ASTM A-36 (36,000 MIN. YIELD)
   HANDHOLE RIMS: ASTM A-36. (36,000 MIN. YIELD)
   WELDS: ALL BUTT WELDS TO BE GROUND FLUSH WITH BASE METAL.
   LONGITUDINAL: BUTT WELD PER AWS. D1.1.
   CIRCUMFERENTIAL: BUTT WELD WITH PERMANENT BACK-UP RING FULL PENETRATION, PER AWS D1.1, E-70 ELECTRODES.
2. FINISH:
   POLE: HOT DIP GALVANIZE PER ASTM A-123.
   HARDWARE: HOT DIP GALVANIZE PER ASTM A-153.
3. POLES TO BE DESIGNED IN ACCORDANCE WITH TITLE 21 & 24 OF C.C.R. 1994 UBC 70 MPH ZONE.
4. POLE SECTIONS TO ASSEMBLED IN FIELD BY CONTRACTOR.

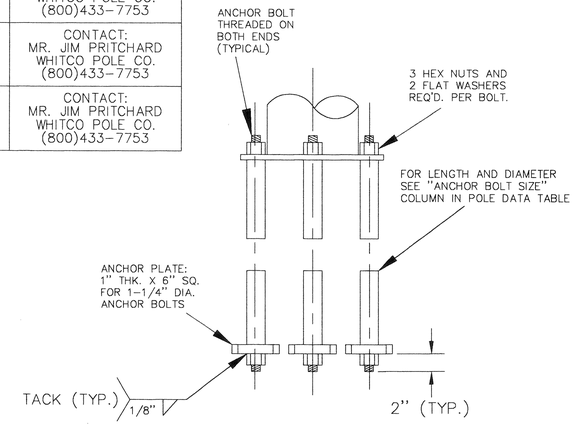

ANCHOR BOLT DETAIL 2/E4
NO SCALE

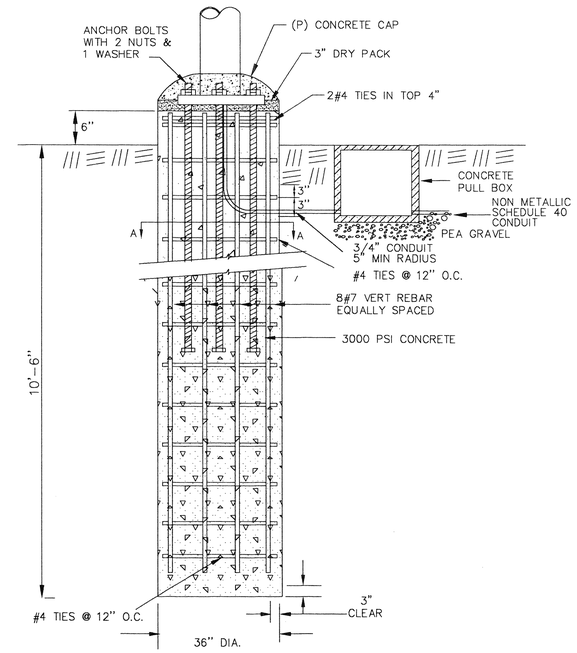

POLE FOOTING DETAIL 1/E4
NO SCALE

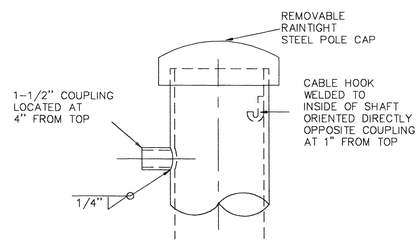

SHAFT TOP DETAIL

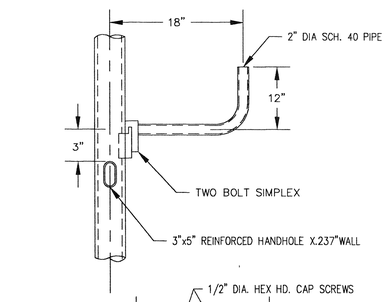

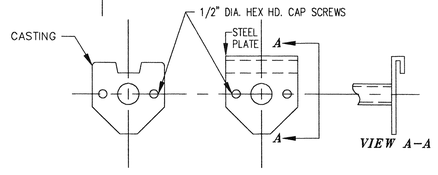

SECURITY LIGHT BULLHORN DETAIL

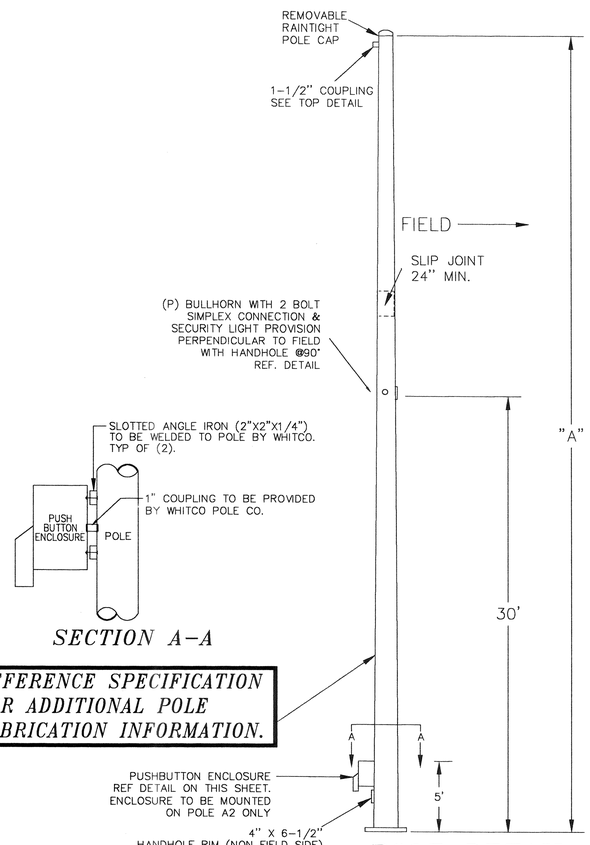

POLE DETAIL 3/E4
NO SCALE

SECTION A-A

REFERENCE SPECIFICATION FOR ADDITIONAL POLE FABRICATION INFORMATION.

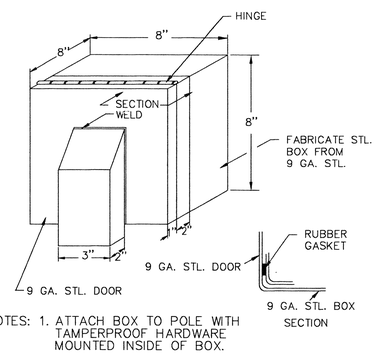

NOTES: 1. ATTACH BOX TO POLE WITH TAMPERPROOF HARDWARE MOUNTED INSIDE OF BOX.
2. FOR ORDERING INFORMATION ON ENCLOSURE CONTACT: MR. RUDI RODRIGEZ EPI (210) 673-3580.

PUSH BUTTON BOX - HASP DETAIL 4/E4
NO SCALE

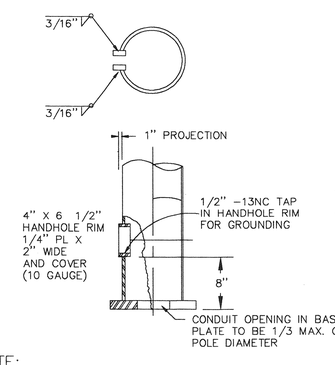

NOTE:

1. HANDHOLE TO BE REINFORCED WITH A PLATE OF THE SAME THICKNESS AS THE POLE. REINFORCING PLATE TO BE 2.5 TIMES AS HIGH AS AND 2.5 TIMES AS WIDE THE SIZE OF THE OPENING, AND CENTERED ON HANDHOLE OPENING.

HANDHOLE REINFORCEMENT

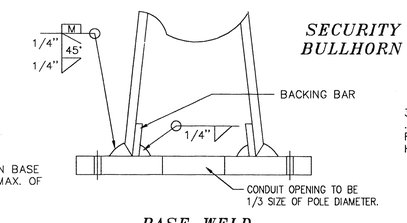

BASE WELD

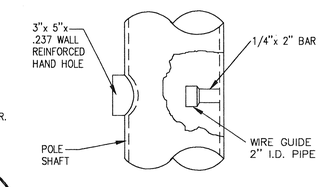

WIRE CARRIER

REGISTERED PROFESSIONAL ENGINEER
JOSEPH M. NOLAN
NO E 9333
EXP: SEP 30 1997
ELECTRICAL
STATE OF CALIFORNIA

UNDERGROUND SERVICE ALERT
CALL TOLL FREE
1-800
422-4133
TWO WORKING DAYS BEFORE YOU DIG

© DREAM ENGINEERING INC. 1996

REVISION:	BY

BORDWELL PARK
SPORTS AREA LIGHTING
CITY OF RIVERSIDE
RIVERSIDE, CALIFORNIA

DREAM
ENGINEERING INC.
CONSULTING ELECTRICAL ENGINEERS
APPLE VALLEY (619)242-8369
PALM DESERT (619)773-4478
FAX (619)242-1092

POLE/FOOTING DETAILS

PROJ.#9604051
DATE: 06/10/96
DWG. FILE: BORDWLE?.DWG

E-4

CONTRACTOR

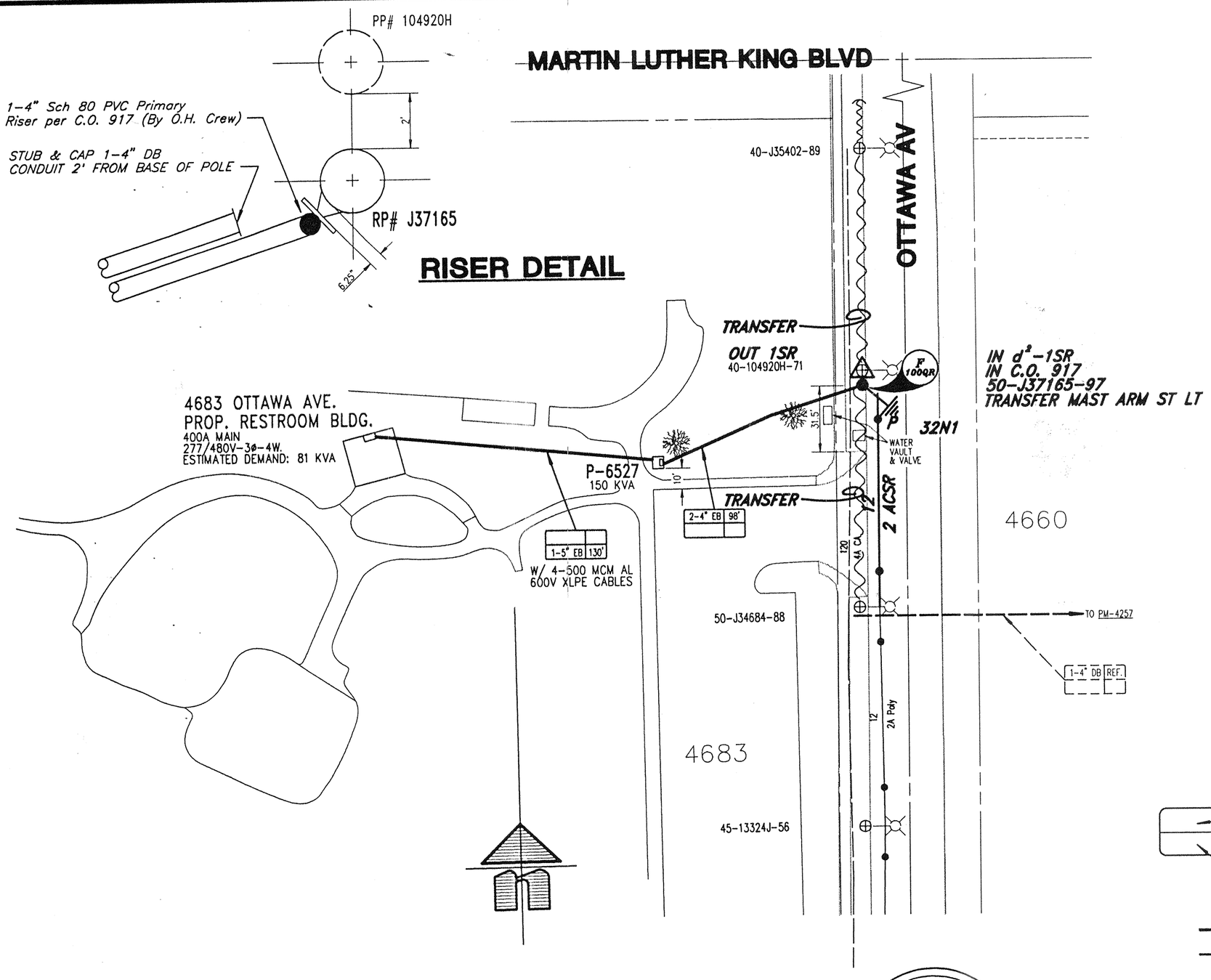

DEVELOPER PARTICIPATION

1. ALL FACILITIES INSTALLED BY ~~DEVELOPER~~ SHALL BE INSPECTED AND APPROVED BY THE DEPARTMENT CONSTRUCTION INSPECTOR (PH. 782-5429). ANY CHANGES SHALL BE APPROVED BY THE DEPARTMENT PRIOR TO EXECUTION. THE ~~DEVELOPER~~ SHALL BE RESPONSIBLE FOR COORDINATING ALL PHASES OF CONSTRUCTION WITH THE DEPARTMENT CONSTRUCTION SUPT. (PH. 351-6300) AFTER THE INSPECTOR HAS NOTIFIED CONSTRUCTION THAT THE ~~CUSTOMER'S~~ WORK IS COMPLETE AND READY FOR DEPARTMENT WORK.
2. PROVIDE AND INSTALL ALL SUBSTRUCTURES, CONDUITS, (POLE RISER CONDUIT EXCEPTED) TRENCHING, BACKFILLING, AND RESURFACING AS SHOWN IN CONFORMANCE WITH THE FOLLOWING STANDARD DRAWINGS; UGS-100, 100.1, 101, 115.1, AND 116.
3. ALL CONTRACTORS WORKING ON OR AROUND THE DEPARTMENTS UNDERGROUND ELECTRICAL FACILITIES MUST HAVE THE PROPERLY QUALIFIED PERSONNEL AND EQUIPMENT TO PERFORM THE SPECIFIED WORK. THE CONTRACTOR WILL BE SOLELY RESPONSIBLE TO ESTABLISH AND MAINTAIN A SAFE WORKING ENVIRONMENT INCLUDING, BUT NOT LIMITED TO WORK AROUND ENERGIZED HIGH VOLTAGE FACILITIES, GAS TESTING OF CONFINED SPACES, TRAFFIC AND PROTECTION. THE DEPARTMENT'S POLICY IS TO PROVIDE ONE (1) QUALIFIED OBSERVER AFTER 24 HOURS NOTICE, TO STAND BY DURING WORK AND PROVIDE RADIO CONTACT WITH CITY OPERATIONS CONTROL.
4. THE CITY OBSERVER HAS THE AUTHORITY TO STOP THE CONTRACTOR'S WORK IF HE DETERMINES THAT ADEQUATE SAFETY PRECAUTIONS ARE NOT BEING TAKEN. HOWEVER, THE PRESENCE OF THE CITY OBSERVER DOES NOT RELIEVE THE CONTRACTOR OF HIS RESPONSIBILITY FOR INSURING SAFE AND APPROPRIATE WORK PRACTICES.
5. ACQUIRE A STREET OPENING PERMIT PRIOR TO EXCAVATING IN STREET RIGHT-OF-WAY.
6. METER ROOM DOOR TO HAVE SCHLAGE LOCK KEYED TO DEPARTMENT MASTER KEY; OR DOUBLE HASP.

DEPARTMENT PARTICIPATION

1. PROVIDE AND INSTALL ALL POLE RISER CONDUITS, CABLES. TERMINATIONS AND TRANSFORMERS FROM SOURCE TO TERMINATING PULLSECTION OR PULLBOX AS SHOWN IN CONFORMANCE WITH STANDARD CONSTRUCTION METHODS. MATERIALS TO BE SPECIFIED ON JOB MATERIAL LISTS.
2. OBTAIN CIRCUIT NUMBER AND RECLOSER TYPE FROM SUBSTATION OPERATOR.
3. CALL PUBLIC WORKS DEPARTMENT INSPECTION DIVISION (PH. 782-5671) FOR INSPECTION OF STREET OR ALLEY RIGHT-OF-WAY EXCAVATIONS.
4. TRANSFORMER IS A 3ø-12470 GRD. Y/7200V-480Y/277V PADMOUNT

SYMBOL LEGEND

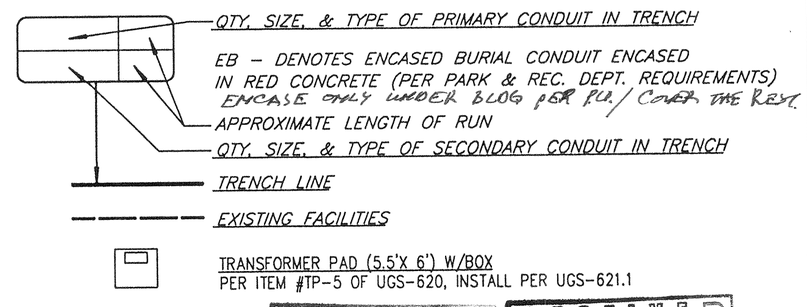

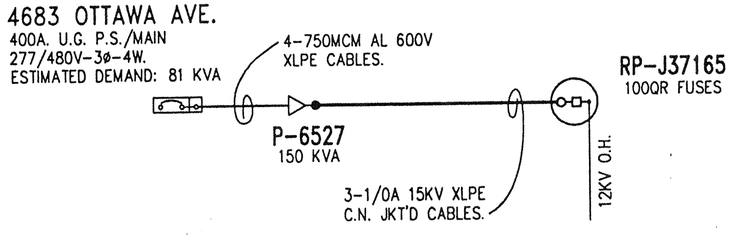

SCHEMATIC DIAGRAM

REGISTERED PROFESSIONAL ENGINEER
WILLIAM F. MAINORD
No. E 15284
Exp.3-31-01
ELECTRICAL
STATE OF CALIFORNIA

William F. Mainord
6-9-97

RECEIVED JUN 9 1997 PARK & RECREATION PLANNING & DESIGN

RECEIVED JUN PARK & RECREATION PLANNING & DESIGN

REF DWG: U2-8475

48 HOURS BEFORE YOU DIG
CALL
UNDERGROUND SERVICE ALERT
1-800-227-2600

UNDERGROUND ELECTRICAL SERVICE TO

BORDWELL PARK LIGHTING & RESTROOM BLDG

4683 OTTAWA AVE. S/O MARTIN LUTHER KING BLVD.

SCALE 1" = 40'	DRAWN WOODALL / VALDEZ	CITY OF RIVERSIDE DEPARTMENT OF PUBLIC UTILITIES	
DATE 2-3-96	CHECKED Valdez 6-9-97		
JPA NO. CR-7066	APPROVED Valdez 6-9-97	DIV. E	DRAWING NO. U04-604516
MAP BK 40-6	BOARD DATE N/A		SHEET 1 OF 1
INV.MAP	ACCT. 510-764200-470601		

ASBUILT	APPRVD	REVISIONS	DATE

CUSTOMER

CONDUCTOR SCHEDULE

RUN	Ø & NEUTRAL	GROUNDING	CONDUIT	% FILL
1	(P) 3#6	(P)1#10	(E)1"	20.24
2	(P) 3#6 3#12	(P)1#10	(E)1"	24.33
✓ 3	(P) 3#10	(P)1#10	(E)1"	15.15
✓ 4	(P) 3#10 3#12	(P)1#10	(E)1"	12.8
/ 5	(P) 3#6 3#10 5#12	(P)1#10	(E)1"	31.1
6	(P) 3#6	(P)1#10	(P)1"	20.24
7	(P) 3#8	(P)1#10	(P)3/4"	24.58
8	(P) 9#12	(P)1#12	(P)3/4"	22.30
9	(P) 6#6 6#8 6#12	(P)1#10	(P)1-1/2"	30.58
10	(P) 6#12	(P)1#12	(P)1/2"	27.30
11	(P) 3/16" PULLROPE		(P)1"	--
12	----		(P)4" DB	--
13	(P) 2#10	(P)1#10	(P)1/2"	18.40

VOLTAGE DROP CALCULATIONS

POLE #	FIXTURE QTY	VOLTAGE	AMPS	CONDR SIZE	Rac	DIST	VOLT DROP	%
A1	6	480	11.59	#12	2.0000	235	10.89	2.27
A2	6	480	11.59	#12	2.0000	60	2.78	0.58
B1	12	480	23.18	#6	0.4900	345	7.84	1.63
B2	12	480	23.18	#6	0.4900	50	1.14	0.24
C1	6	480	11.58	#10	2.0000	440	12.2	2.5
C2	6	480	11.58	#12	2.0000	265	12.3	2.6

RECEIVED
MAY - 5 1997
PARK & RECREATION
PLANNING & DESIGN

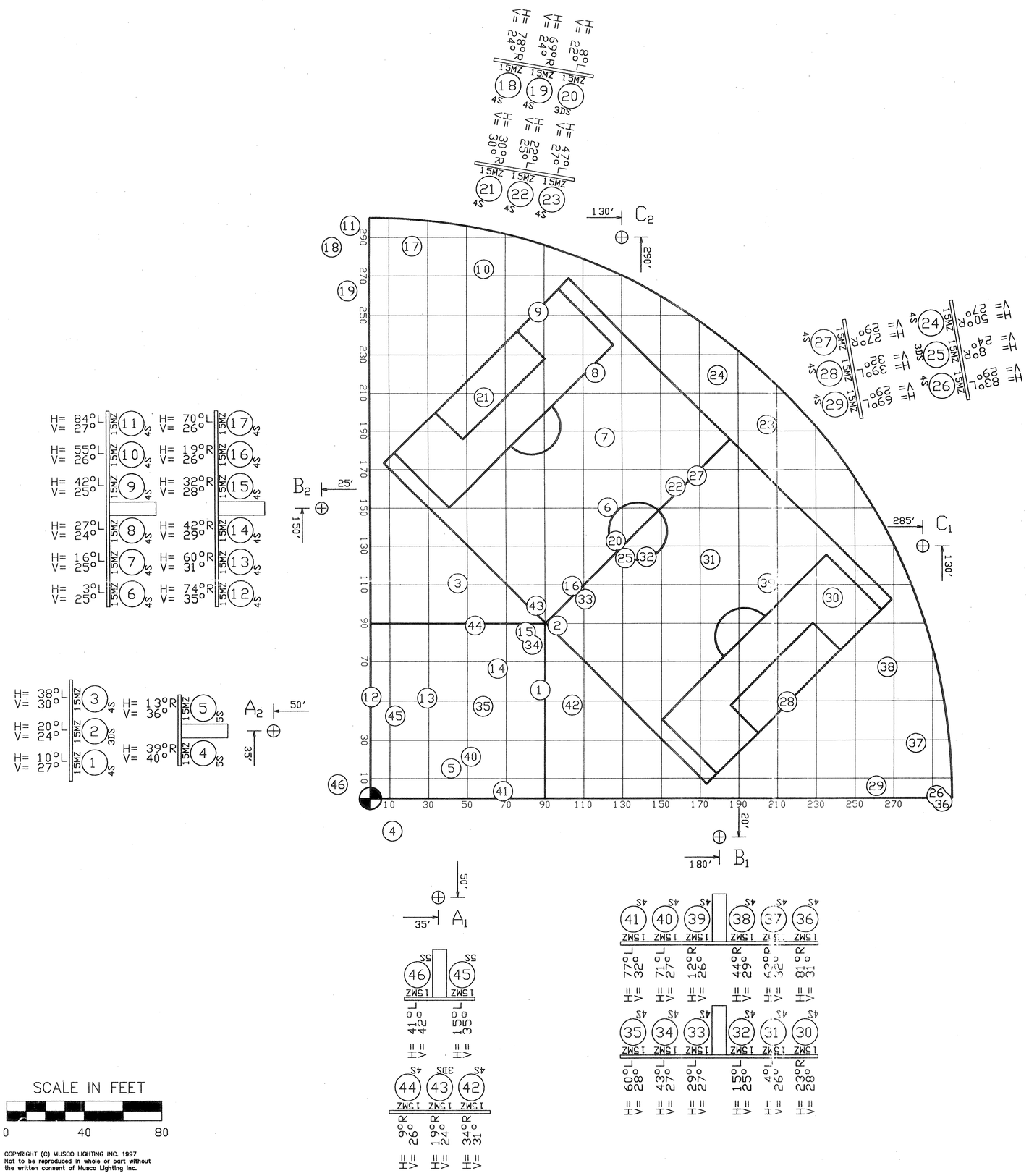

SCALE IN FEET

0 40 80

COPYRIGHT (C) MUSCO LIGHTING INC. 1997
Not to be reproduced in whole or part without the written consent of Musco Lighting Inc.

NOTES:

Pole location dimensions are relative to the 0,0 reference point which is home plate of the playing field as indicated by....

** Overcurrent devices and conductors MUST be sized using the ballast Manufacturer's rated amperage draw per fixture (kVA). Using the kW rating can result in undersized calculations. Refer to Musco's Ballast Specification Chart (located below) for manufacturer's amperage draw.**

This drawing is per scan number(s): 23435SBD1 DATED: 25-JUN-97

FIELD LIGHTING EQUIPMENT

APPROXIMATE FOOTCANDLE LEVEL:	50/30 30 .8 MAINT.	LAMP TYPE:	1500W MHZ
MAX. TO MIN. RATIO NOT TO EXCEED:	2:1/3:1 2.5:1	FINISH:	GALVANIZED

PRODUCT TYPE: LIGHT STRUCTURE

POLE QUANTITY	POLE DESIGNATION	MOUNTING HEIGHT	POLE CLASS	ELEV. VAR.	LUMINAIRES FIXTURE TYPE(S)	LUMINAIRES FIXTURES PER POLE	ELECTRICAL LOAD KILOWATT CONSUMPTION PER POLE	WIND EPA PER POLE INC. CROSSARM
2	A1,A2	70'	70A	–	SC-2	5	8.0	
2	B1,B2	70'	70B	–	SC-2	12	19.2	
1	C1	70'	70A	–	SC-2	6	9.6	
1	C2	65'	70A	-5	SC-2	6	9.6	
6	← TOTALS →					46	73.6	

BALLAST SPECIFICATIONS .90 Minimum Power Factor	VOLTAGE: 480 1 PHASE						
SINGLE PHASE VOLTAGE (Also applicable to each single phase of a 3 phase system)	120	208	240	277	380	415	480
1500 WATT METAL HALIDE LAMP Operating line amperage per fixture, max. draw	14.2	8.1	7.1	6.1	4.4	4.0	3.5
1000 WATT METAL HALIDE LAMP Operating line amperage per fixture, max. draw	9.1	5.3	4.6	3.9	3.0	2.7	2.2

Sportscluster® Light-Structure System™ and Light-Pak™ are covered by one of more of the following U.S. patents: 4725934, 4190881, 4374407, D257891, 4729077, 4450507, 4816974, 4947303, 5016150, 5134557, 5075828, D337168, 5229681, 5211473, 4994718, 5161883. Canadian patents: 1114798, 1181380, RD 1992 Musco #70479 RD 1994 Musco #73755. Other patents pending.

BORDWELL PARK BALLFIELD
RIVERSIDE, CA

musco lighting
SPORTS OFFICE:
P.O. Box 14
2107 Stewart Road
Muscatine, Iowa 52761
800/756-1205

DATE:	BY:	LEVEL:	REVISIONS:

PROJECT NUMBER: 14023435
ORDER NUMBER: 21464
REPRESENTATIVE: B. MARCHETTI
DRAWN BY: LGJ
CHECKED BY: LGJ / DC
DATE: 25-JUN-97
DRAWING NUMBER: 23435
1 OF 1 SHEETS