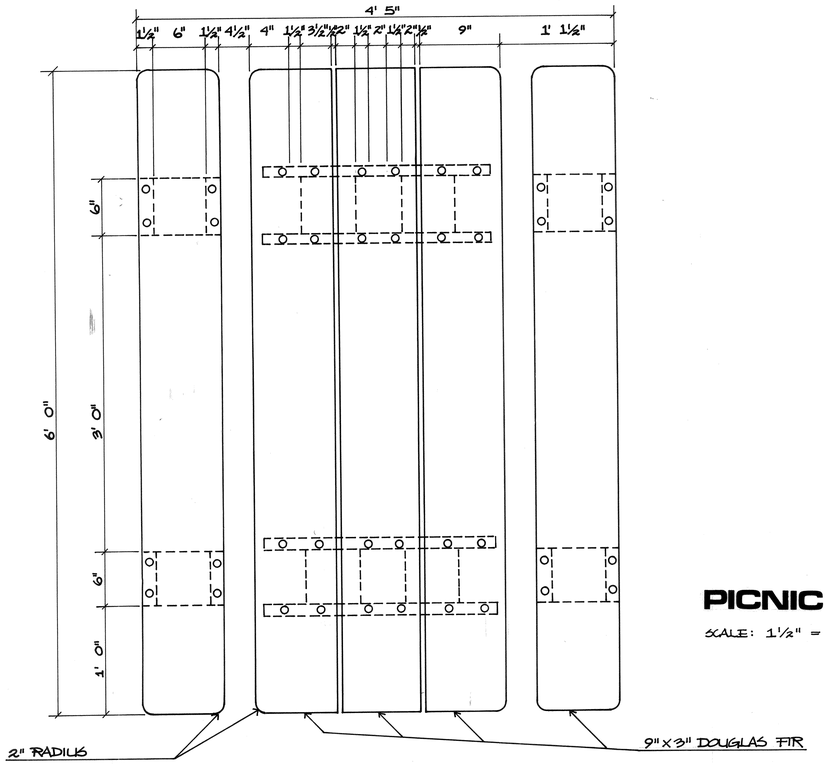

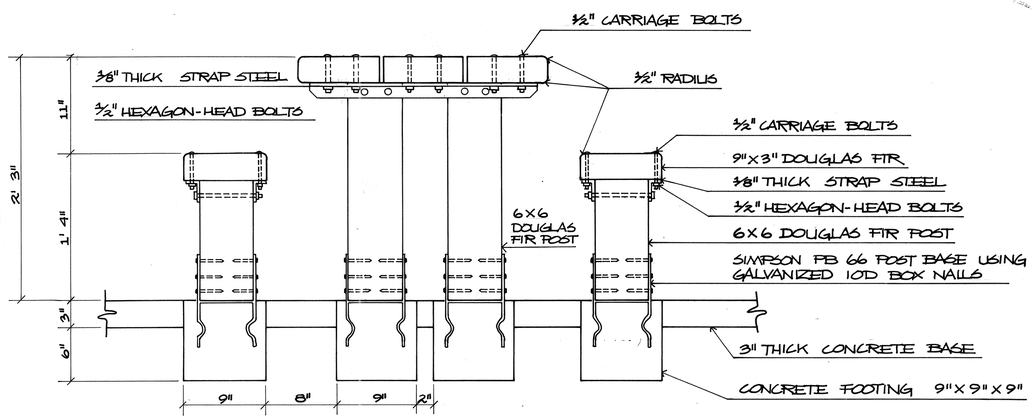

PICNIC TABLE AND BENCHES

SCALE: 1½" = 1'-0"

NOTE: THE 1% SLOPE OF THE CONCRETE BASE MAY VARY IN DIRECTION DEPENDING ON THE GRADE AROUND THE AREA EACH PICNIC SHELTER IS TO BE PLACED.

CONCRETE PAD SHALL BE 4" THICK AND REINFORCED WITH #6 GAUGE WIRE 6" x 6" WELDED. TWO EXPANSION JOINTS SHALL BE PROVIDED ACROSS THE SLAB AS SHOWN ON THE PLAN. SURFACE TO BE HARD TROWELED AND FINISHED WITH A LIGHT BROOM FINISH. THERE SHALL BE 2" OF GRAVEL BELOW THE CONCRETE PAD.

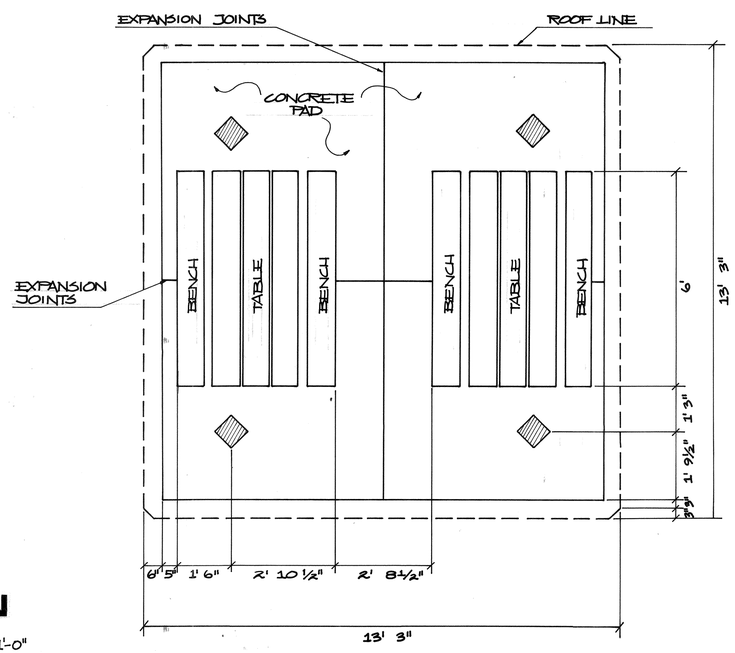

PLAN

SCALE: ½" = 1'-0"

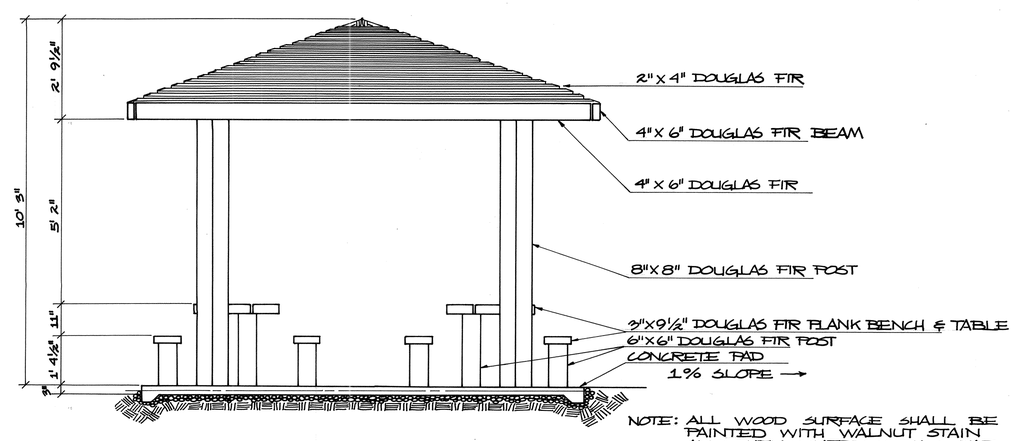

NOTE: ALL WOOD SURFACE SHALL BE PAINTED WITH WALNUT STAIN AND THEN COATED WITH CLEAR OIL BASE POLY URETHANE. ALL METAL SURFACES ARE TO BE PAINTED WITH FLAT BLACK ENAMEL.

ELEVATION

SCALE: ½" = 1'-0"

REVISIONS:

JOB NO.:

DATE:

PARK & RECREATION DEPARTMENT
CITY OF RIVERSIDE
2225 MARKET

PICNIC SHELTER
BORDWELL PARK
2008 PENNSYLVANIA AVENUE

DETAILS

SCALE:

DESIGN BY:

DRAWN BY: AS

SHEET 1 OF 2

P-105-8

SHADE ROOF PLAN

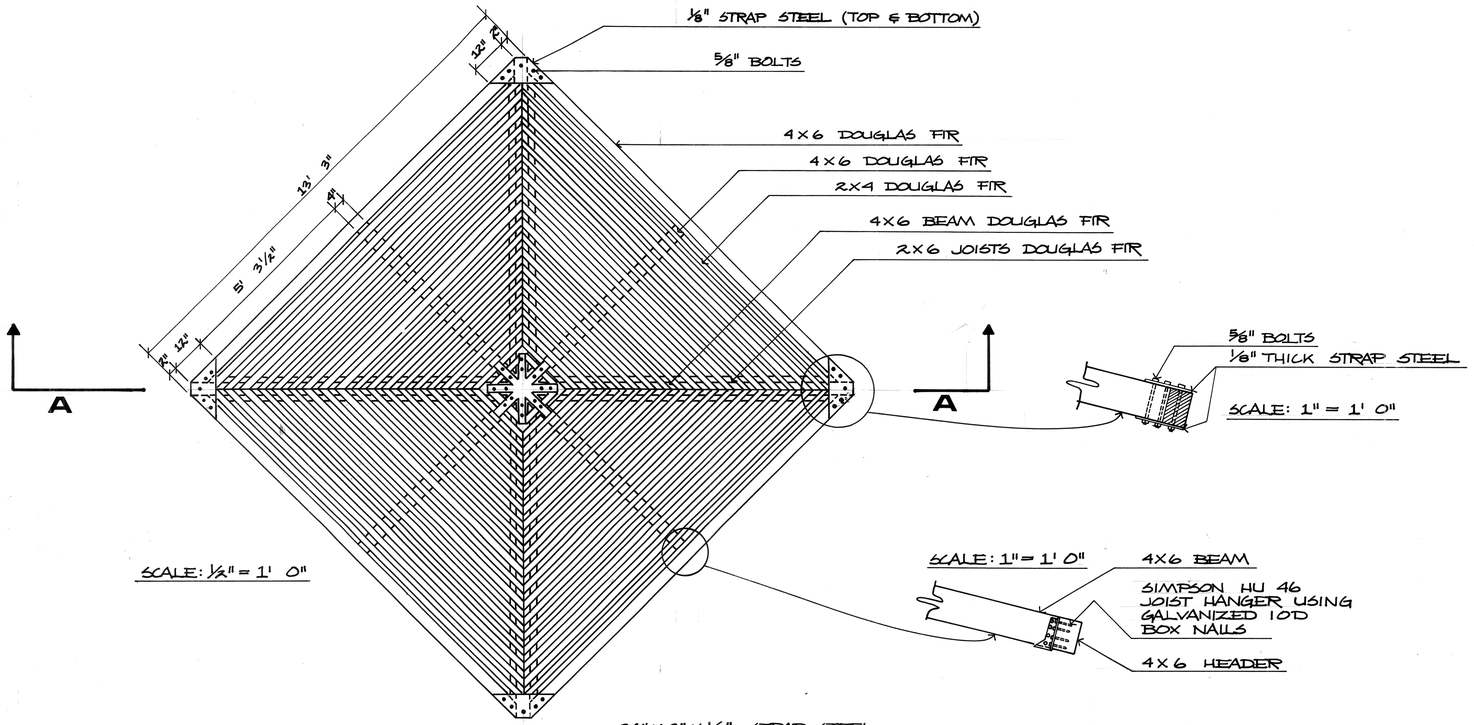

SHADE ROOF DETAIL

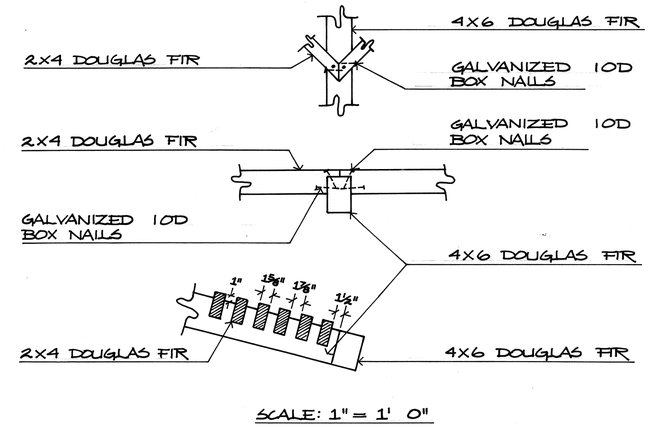

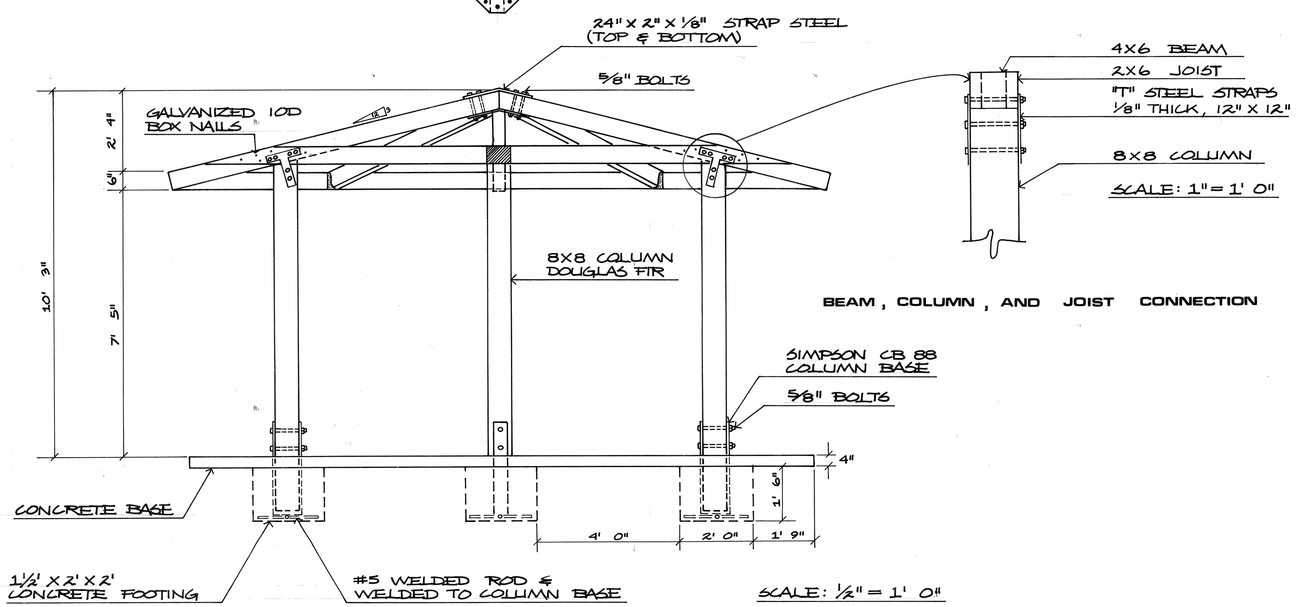

SECTION A-A

BEAM, COLUMN, AND JOIST CONNECTION

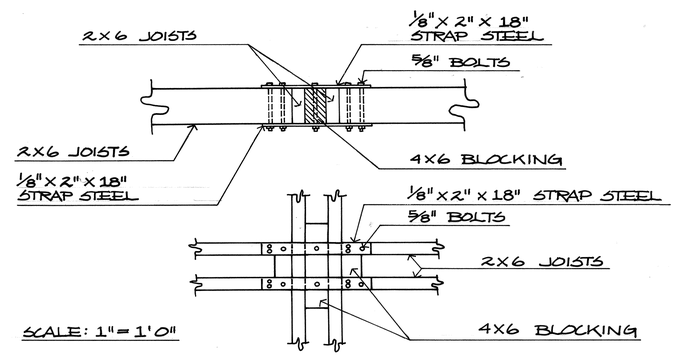

JOISTS CONNECTION IN CENTER

REVISIONS:

JOB NO.:

DATE:

PARK & RECREATION
DEPARTMENT
CITY OF RIVERSIDE
2225 MARKET

PICNIC
SHELTER
BORDWELL PARK
2008 PENNSYLVANIA AVENUE

DETAILS

SCALE:

DESIGN BY:

DRAWN BY: AS

SHEET 2 OF 2

P-105-7