GENERAL REQUIREMENTS

1. NO CHANGES ARE TO BE MADE TO THESE PLANS WITHOUT THE KNOWLEDGE AND WRITTEN CONSENT OF THE ARCHITECT/ENGINEER.

2. ALL DIMENSIONS CONTROLLED BY EXISTING CONDITIONS SHALL BE VERIFIED BY CONTRACTOR AT SITE.

3. CONSTRUCTION AND MATERIALS SHALL COMPLY WITH AND BE INSTALLED IN ACCORDANCE WITH ALL THE REQUIREMENTS OF ALL LEGALLY CONSTITUTED PUBLIC AUTHORITIES HAVING JURISDICTION, AND THE SAFETY ORDERS OF THE STATE INDUSTRIAL ACCIDENT COMMISSION, OSHA.

4. GENERAL CONTRACTOR SHALL VISIT THE JOB SITE AND VERIFY ALL GRADES, DIMENSIONS, AND CONDITIONS PRIOR TO BIDDING AND COMMENCING CONSTRUCTION.

5. GENERAL CONTRACTOR SHALL BE RESPONSIBLE FOR THE COORDINATION OF ALL WORK, INCLUDING THAT OF ALL SUB-TRADES.

6. GENERAL CONTRACTOR SHALL NOTIFY ENGINEER/ARCHITECT IMMEDIATELY OF ANY DISCREPANCIES FOUND WITHIN THE CONTRACT DOCUMENTS.

7. ALL WORK PERFORMED SHALL CONFORM WITH THE REQUIREMENTS OF THE UNIFORM BUILDING CODE (LATEST ADOPTED EDITION) OR OTHER APPLICABLE GOVERNING CODES AND BUILDING ORDINANCES.

8. ALL SUB-CONTRACTORS SHALL BE RESPONSIBLE FOR REMOVAL OF ALL DEBRIS ACCUMULATED AS A RESULT OF THEIR OPERATION. ALL SCRAP, DEBRIS AND OTHER EXCESS MATERIAL SHALL BE REMOVED FROM THE BUILDING SITE.

9. THE OWNER SHALL HAVE THE RIGHT TO MAKE CERTAIN CHANGES IN THE WORK AND THE CONTRACT AMOUNT SHALL BE ADJUSTED ACCORDINGLY. HOWEVER, THE GENERAL CONTRACTOR SHALL NOT PROCEED WITH ANY CHANGES WITHOUT WRITTEN APPROVAL OF THE OWNER.

10. ALL MATERIALS SHALL BE FURNISHED AS SHOWN HEREIN UNLESS EQUAL ALTERNATES ARE APPROVED IN WRITING BY THE OWNER.

11. GENERAL CONTRACTOR SHALL BE RESPONSIBLE FOR SHORING AND PROVIDING BRACING DURING CONSTRUCTION AND/OR ERECTION TO SUPPORT ALL LOADS TO WHICH THE STRUCTURE MAY BE SUBJECTED.

12. SEE SPECIFICATIONS FOR ADDITIONAL REQUIREMENTS.

13. ANY REFERENCE TO THE WORDS APPROVE, APPROVED, OR APPROVAL IN THESE DOCUMENTS SHALL BE HERE DEFINED TO MEAN GENERAL ACCEPTANCE OR REVIEW AND SHALL NOT RELIEVE THE CONTRACTOR AND/OR HIS SUB-CONTRACTORS OF ANY LIABILITY IN FURNISHING THE REQUIRED MATERIALS OR LABOR AS SPECIFIED.

14. THE CONTRACT DRAWINGS AND SPECIFICATIONS REPRESENT THE FINISHED STRUCTURE AND DO NOT INDICATE THE METHOD OF CONSTRUCTION. THE CONTRACTOR SHALL SUPERVISE AND DIRECT THE WORK AND SHALL BE SOLELY RESPONSIBLE FOR CONSTRUCTION MEANS, METHODS, TECHNIQUES, SEQUENCES AND PROCEDURES, INCLUDING, BUT NOT LIMITED TO BRACING AND SHORING. OBSERVATION VISITS TO THE SITE BY FIELD REPRESENTATIVES OF THE ARCHITECT OR ENGINEER SHALL NOT INCLUDE INSPECTIONS OF THE PROTECTIVE MEASURES OR THE CONSTRUCTION PROCEDURES. ANY SUPPORT SERVICES PERFORMED BY THE ARCHITECT OF ENGINEER DURING THE CONSTRUCTION SHALL BE DISTINGUISHED FROM CONTINUOUS AND DETAILED INSPECTION SERVICES WHICH ARE FURNISHED BY OTHERS. THESE SUPPORT SERVICES PERFORMED BY THE ARCHITECT OR ENGINEER, WHETHER OF MATERIAL OR WORK, AND FOR THE PURPOSE OF ASSISTING IN QUALITY CONTROL AND IN ACHIEVING CONFORMANCE WITH CONTRACT DOCUMENTS DO NOT GUARANTEE CONTRACTOR'S PERFORMANCE AND SHALL NOT BE CONSTRUED AS SUPERVISION OF CONSTRUCTION.

15. ALL CONDITIONS SHOWN OR NOTED AS EXISTING ARE BASED ON BEST INFORMATION CURRENTLY AVAILABLE AT THE TIME OF PREPARATION OF THESE DRAWINGS. NO WARRANTY IS IMPLIED AS TO THE ACCURACY OF THE SAME, HOWEVER, THE CONTRACTOR IS TO FIELD VERIFY ALL CONDITIONS. SHOULD CONDITIONS BECOME APPARENT WHICH DIFFER FROM THE CONDITIONS SHOWN HEREIN THEY SHALL BE BROUGHT TO THE IMMEDIATE ATTENTION OF THE OWNER'S REPRESENTATIVE. THE OWNER'S REPRESENTATIVE WILL THEN PREPARE ADDITIONAL DRAWINGS AS MAY BE NEEDED TO ACCOMMODATE THE CONDITIONS AS BROUGHT TO THEIR ATTENTION.

16. ANY REFERENCE TO A FIRMS NAME OR PRODUCTS NAME IN THESE DOCUMENTS SHALL BE HEREBY DEFINED AS GENERAL ACCEPTANCE OF MATERIALS OF EQUAL STANDARDS WHEN APPROVAL OF SUBSTITUTION IS IN WRITING BY THE ENGINEER/ARCHITECT.

STRUCTURAL STEEL

1. ALL STRUCTURAL STEEL SHALL CONFORM TO THE REQUIREMENTS OF ASTM AND SHALL BE FABRICATED ACCORDING TO AISC PRACTICE AND SPECIFICATIONS FOR BUILDING.

2. STRUCTURAL SHAPES, PLATES, AND BARS SHALL CONFORM TO ASTM A-36.

3. TUBE MEMBERS SHALL CONFORM TO ASTM A-500, GRADE B (FY = 46 KSI). PIPE COLUMNS SHALL CONFORM TO ASTM A-53, GRADE B.

4. WELDING SHALL CONFORM WITH THE LATEST EDITION OF THE WELDING CODE AWSD1.1. USE APPROVED ELECTRODES CONFORMING WITH ASTM A-233. WELDING SHALL BE PERFORMED BY BUILDING DEPARTMENT APPROVED CERTIFIED WELDERS. ALL FIELD WELDING SHALL BE CONTINUOUSLY INSPECTED BY A REGISTERED DEPUTY INSPECTOR.

5. UNLESS OTHERWISE NOTED, ALL SHOP AND FIELD BOLTED CONNECTIONS SHALL BE IN ACCORDANCE WITH USING UNFINISHED AMERICAN STANDARD REGULAR BOLTS CONFORMING TO ASTM-307.

6. STRUCTURAL STEEL SHOP DRAWINGS SHALL BE REVIEWED BY THE STRUCTURAL ENGINEER PRIOR TO FABRICATION.

7. ALL EXPOSED WELDS SHALL BE FILLED AND GROUND SMOOTH WHERE METAL WILL COME IN CONTACT WITH PUBLIC.

8. NO HOLES OTHER THAN THOSE SPECIFICALLY DETAILED SHALL BE ALLOWED THRU STRUCTURAL STEEL MEMBERS. NO CUTTING OR BURNING OF STRUCTURAL STEEL WILL BE PERMITTED WITHOUT PRIOR CONSENT OF THE ENGINEER.

EXPANSION. ANCHORS

PHILLIPS RED HEAD ANCHORS SHALL BE INSTALLED IN ACCORDANCE WITH I.C.B.O. REPORT NO. 1372. MINIMUM EMBEDMENT DEPTHS OF RED HEAD WEDGE ANCHORS ARE AS FOLLOWS:

ANCHOR DIAMETER	1/2"	5/8"	3/4"	7/8"	1"	1-1/4"
MIN. INSTALLATION TORQUE	40	70	125	200	250	1000
MIN EMBEDMENT DEPTH	2-1/9"	2-3/4"	3-1/4"	3-3/4"	4-1/2"	5-1/2"

FRAMING LUMBER

1. ALL FRAMING LUMBER SHALL CONFORM TO "STANDARD GRADING AND DRESSING RULES NO. 16 OF WEST COAST LUMBER INSPECTION BUREAU. EACH PIECE SHALL BEAR THE GRADE STAMP OF AN APPROVED GRADING AGENCY, EXCEPT EXPOSED LUMBER SHALL BEAR NO MARKINGS WHICH WILL BE VISABLE AFTER INSTALLATION.

2. FRAMING LUMBER SHALL BE DOUGLAS FIR, S4S, UNLESS OTHERWISE NOTED. THE FOLLOWING GRADES SHALL BE THE MINIMUM ACCEPTABLE GRADES, UNLESS OTHERWISE NOTED:

ITEM — MINIMUM GRADE

STUDS;
2" TO 4" THICK, 2" TO 4" WIDE (STD. HT.=8'-1" MAX).STUD GRADE
2" THICK 4" TO 8" WIDE.....NO. 2 OR BETTER
STRUCTURAL LIGHT FRAMING:
2" TO 4" THICK, 2 " TO 4" WIDE.....NO. 2 OR BETTER
STRUCTURAL JOISTS AND PLANKS;
2" TO 4" THICK, 6" AND WIDER.....NO. 2 OR BETTER
BEAMS AND STRINGERS;
5" AND THICKER, 6" AND WIDER.....NO. 1 OR BETTER
POSTS AND TIMBERS;
5" X 5" AND LARGER.....NO. 1 OR BETTER

3. MAXIMUM STUD HEIGHT SCHEDULE AT NON-BEARING WALLS (LATERALLY UNSUPPORTED HEIGHT):

2 X 4 AT 16"O.C.....12' - 0"

2 X 6 AT 16" O.C.....18' - 0"

2 X 8 AT 16" O.C.....23' - 0" U.O.N.

4. PLYWOOD SHALL CONFORM TO PRODUCT STANDARD PS-1-83. PLYWOOD SHALL BE APA GRADE STAMPED, INCLUDING PANEL INDEX NUMBER. ROOF SHEATHING SHALL BE 1/2" CD-X STRUCTURAL , P.I. 32/16, UNLESS OTHERWISE NOTED. FLOOR SHEATHING SHALL BE 5/8" UNDERLAYMENT, P.I. 42/20, UNLESS OTHERWISE NOTED. SEE SHEAR WALL SCHEDULE FOR SHEAR PANEL SHEATHING. ROOF AND FLOOR SHEATHING AND SHEAR PANELS SHALL BE IN PLACE AND INSPECTED BY THE BUILDING OFFICIAL PRIOR TO COVERING. INSTALL WITH FACE GRAIN ACROSS SUPPORTS EXCEPT WHERE NOTED ON PLANS.

5. ALL OPENINGS THRU ROOF SHALL BE NAILED PER BOUNDARY NAILING OF PLYWOOD DIAPHRAM NAILING REQUIREMENTS.

6. ALL GLUE LAMINATED MEMBERS AS SHOWN ON PLANS SHALL BE FABRICATED IN ACCORDANCE WITH A.I.T.C. SPECIFICATIONS, ADHESIVES SHALL BE WATER RESISTANT INTERIOR W.C.L.A. SPECIFICATION COMBINATION 24F-V4, INDUSTRIAL APPEARANCE GRADE, A.I.T.C. INSPECTION CERTIFICATES SHALL BE FURNISHED WITH EACH BEAM. SUBMIT SHOP DRAWINGS TO KEVIN B. COZAD & ASSOCIATES, INC. FOR REVIEW PRIOR TO FABRICATION.

7. AT CANTILEVERED GLUE LAMINATED BEAMS, TENSION LAMINATIONS SHALL BE IN TOP AND BOTTOM OUTERMOST 5% OF TOTAL DEPTH WITH MEMBERS EXCEEDING 16 1/2" IN DEPTH.

8. FRAMING HARDWARE SHALL BE SIMPSON "STRONG-TIE" CONNECTORS OR EQUAL. ALL SUBSTITUTES SHALL BEAR I.C.B.O. APPROVAL. UNLESS OTHERWISE INDICATED ON DRAWINGS ALL FLUSH WOOD TO WOOD CONNECTORS SHALL BE MADE WITH "SIMPSON" METAL HANGERS AS FOLLOWS:

2 X 4, 6, & 8 MEMBERS....."U" SERIES
2 X 10, 12, 14 & 16 MEMBERS....."HU" SERIES
4 X & LARGER....."HUTF" SERIES

9. NAILING SCHEDULE, TYPICAL UNLESS OTHERWISE NOTED ON DRAWINGS:

CONNECTION — COMMON NAILS

JOIST TO SILL OR GIRDER, TOE NAIL.....3-8D
BRIDGING TO JOIST, TOE NAIL, EACH END.....2-8D
1" X 6" SUB-FLOOR TO EACH JOIST, FACE NAIL.....2-8D
1" X 8" SUB-FLOOR TO EACH JOIST, FACE NAIL.....3-8D
2" T & G FLOOR DECKING TO JOIST, BLIND & FACE NAIL.....2-16D
SOLE PLATED TO JOIST OR BLOCKING, FACE NAIL.....16D @16" O.C.
TOP PLATE TO STUD, END NAIL.....2-16D
DOUBLE STUD, FACE NAIL.....16D @24" O.C.
DOUBLE TOP PLATES, FACE NAIL.....16D @16" O.C.
TOP PLATES, LAPS & INTERSECTIONS, FACE NAIL.....2-16D
CONTINUOUS HEADER, 2 PIECES, FACE NAIL ALONG EDGES.16D @16" O.C.
CEILING JOISTS TO PLATE, TOE NAIL.....3-8D
CONTINUOUS HEADER TO STUD, TOE NAIL.....4-8D
CEILING JOIST, LAPS OF PARTITIONS, FACE NAIL.....3-16D
CEILING JOISTS TO PARALLEL RAFTERS, FACE NAIL.....3-16D
RAFTER TO PLATE, TOE NAIL.....3-8D
1" X BRACE TO EACH STUD AND PLATE, FACE NAIL.....2-8D
1" X 8" SHEATHING OR LESS TO EACH BEARING, FACE NAIL....2-8D
WIDER THAN 1" X 8" BOARD TO EACH BEARING, FACE NAIL.....3-8D
BUILT-UP CORNER STUDS.....16D @24" O.C.
BUILT-UP CORNER MEMBERS: 2 MEMBERS.....16D @32" O.C.
AT TOP & BOTTOM, STAGGERED
3 OR MORE MEMBERS..1/2 THRU BOLTS @24" O.C. TOP & BOTTOM, STAGGERED
2" PLANKING, FACE NAIL AT EACH BEARING.....2-16D
PLYWOOD SUBFLOOR, ROOF AND WALL SHEATHING
3/8".....8D
1/2".....10D
5/8" - 3/4".....10D

ADDITIONAL NAILING NOTES

A. ALL NAILS TO BE COMMON NAILS UNLESS SPECIFIED OTHERWISE ON DRAWINGS

B. PLYWOOD SHEATHING SHALL BE NAILED AS FOLLOWS UNLESS OTHERWISE NOTED ON DRAWINGS:
BOUNDARY NAILING - 4" O.C.
EDGE NAILING - 6" O.C.
FIELD NAILING - 12" O.C. (10" O.C. AT FLOORS)

C. ALL NAILS EXPOSED TO THE WEATHER SHALL BE GALVANIZED.

10. MISCELLANEOUS ITEMS, WHERE APPLICABLE:

A. MUDSILLS: "WOLMANIZED" NO. 2 DOUGLAS FIR, S4S, OR BETTER.
B. ROOF DECKING: SELECT DECKING-DRY, 2" X 6" T & G, V-GROOVE DOUGLAS FIR.
C. FASCIA: NO. 1, EXPOSED HEMLOCK OR SPRUCE, SELECTED FOR APPEARENCE.
D. EXTERIOR TRIM: NO. 1, EXPOSED DOUGLAS FIR, SELECTED FOR APPEARANCE.

FRAMING LUMBER (CONT'D)

11. HEADER AND CEILING JOIST SCHEDULE, TYPICAL UNLESS OTHERWISE NOTED.

HEADER SCHEDULE

CLEAR OPENING WIDTH	HEADER SIZE	HEADER SUPPORT
0'-0" TO 4'-0"	4 X 4 OR 6 X 4	2 X STUD
4'-1" TO 6'-0"	4 X 6 OR 6 X 6	2 X STUD
6'-1" TO 8'-0"	4 X 8 OR 6 X 6	2 X STUD
8'-1" TO 10'-0"	4 X 10 OR 6 X 8	2-2 X STUDS
10'-1" TO 12'-0"	4 X 12 OR 6 X 10	2-2 X STUDS
12'-1" TO 14'-0"	4 X 14 OR 6 X 12	4 X POST
14'-1" TO 16'-0"	4 X 16 OR 6 X 14	4 X POST

CEILING JOIST SCHEDULE

SPAN	JOIST SIZE AND SPACING
LESS THAN 11'0"	2 X 4 @ 16" O.C. OR 2 X 6 @ 24" O.C.
11'-1" TO 17'-0"	2 X 6 @ 16" O.C. OR 2 X 8 @ 24" O.C.
17'-1" TO 22"-0"	2 X 8 @ 16" O.C. OR 2 X 10 @ 24" O.C.

NOTE: USE ABOVE SCHEDULES WHERE SIZES ARE NOT INDICATED ON PLANS OR IN DETAILS. CEILING JOISTS ARE INTENDED TO SUPPORT WEIGHT OF DRYWALL CEILING ONLY.

12. ALL BOLTS THRU WOOD SHALL HAVE STANDARD WASHERS EXCEPT WHERE METAL SIDE PLATES ARE SPECIFIED. BOLT HOLES SHALL BE NOT MORE THAN 1/16" LARGER THAN THE BOLT DIAMETER, UNLESS OTHERWISE NOTED.

13. SILL PLATES SHALL BE BOLTED TO FOUNDATIONS WITH 1/2" X 10" LONG ANCHOR BOLTS AT 6' - 0" O.C. UNLESS OTHERWISE NOTED.

14. BRIDGING OF JOISTS OR RAFTERS: PROVIDE BRIDGING AT 10'-0" O.C. FOR ROOF RAFTERS AND 8'- 0" O.C. FOR FLOOR JOIST. PROVIDE 2 X SOLID BLOCKING AT ALL BEARING LOCATIONS.

15. DIAPHRAGM NAILING NOTE: WHERE 8D NAILS ARE SPACED 2-1/2" O.C. OR 10D NAILS ARE SPACED 3" O.C. HAVING A MINIMUM PENETRATION OF 1-5/8" INTO THE SUPPORTING MEMBER, THE SUPPORTING MEMBER SHALL BE A 3 X MINIMUM AND THE NAILS SHALL BE STAGGERED.

16. ROOF DESIGN LOADS: THE LOADS GIVEN BELOW ARE MINIMUM DESIGN LOADS. PROVIDE KEVIN B. COZAD & ASSOCIATES, FOR THEIR REVIEW ANY MECHANICAL EQUIPMENT NOT SHOWN ON THESE DRAWINGS AND ANY SPRINKLER MAINS PROPOSED TO BE SUPPORTED BY THE ROOF STRUCTURE. FURNISH SIZES, WEIGHTS, AND LOCATIONS.

DESIGN DEAD LOAD = _____P.S.F.

DESIGN LIVE LOAD = _____P.S.F.

ABBREVIATIONS

A.B. - ANCHOR BOLT
ALT. - ALTERNATE
BLKG. - BLOCKING
BM. - BEAM
B.N. - BOUNDARY NAILING
BTW. - BETWEEN
CLG. - CEILING
CLR. - CLEAR
C.J. - COLD JOINT(CONSTR.JOINT)
COL. - COLUMN
CONC. - CONCRETE
CONT. - CONTINUOUS
C.P.E.- CONT. PANEL EDGES
DBL. - DOUBLE
DIA. - DIAMETER
DO. - DITTO
DRWG. - DRAWING
EA. - EACH
ELEV. - ELEVATION
(E) - EXISTING
E.J. - EXPANSION JOINT
E.N. - EDGE NAILING
EQ. - EQUAL
EXT. - EXTERIOR
F.F. - FINISH FLOOR
FLR. - FLOOR
F.S. - FAR SIDE
FIN.GRD.- FINISH GRADE
F.O.C.- FACE OF CONCRETE
F.O.M.- FACE OF MASONRY
F.O.S.- FACE OF STUD
F.P. - FULL PENETRATION
FRMG. - FRAMING
FDN. - FOUNDATION
FTG. - FOOTINGS
GALV. - GALVANIZED
GA. - GAUGE
G.L.B.- GLUE LAMINATED BEAM
GRD. - GRADE
G.B. - GYPSUM BOARD
HORIZ.- HORIZONTAL
H.S.B.- HIGH STRENGTH BOLT
INT. - INTERIOR
JST. - JOIST
LT.WT.- LIGHT WEIGHT
MAS. - MASONRY
M.B. - MACHINE BOLT
MTL. - METAL
(N) - NEW
N.S. - NEAR SIDE
N.T.S.- NOT TO SCALE
O.C.or O/C - ON CENTER
OPNG. - OPENING
P.J. - POUR JOINT
℗ - PLATE
P.W. - PLYWOOD
REINF.- REINFORCING
REQD. - REQUIRED
S.A. - STUD ANCHOR
SHTG. - SHEATHING
SQ. - SQUARE
SIM. - SIMILAR
S.M. - SHEET METAL
STAGG.- STAGGER
STRUCT.- STRUCTURAL
STL. - STEEL
T.N. - TOE NAIL
T.O.C.- TOP OF CONCRETE
T.O.M.- TOP OF MASONRY
T.O.P.- TOP OF PLYWOOD
T.O.S.- TOP OF STEEL
T.S. - TUBE STEEL
TYP. - TYPICAL
U.N.O.- UNLESS NOTED OTHERWISE
VERT. - VERTICAL
WD. - WOOD
W.P.J.- WEAKENED PLANE JOINT
W.W.F.- WELDED WIRE FABRIC

LEGEND

DETAIL NUMBER / SHEET NUMBER
PRECAST CONCRETE
POURED CONCRETE
MASONRY
STEP FOOTING
SECTION OR DETAIL NO. / SHT.NO. WHERE DRAWN / SHT.NO. WHERE REF.FROM
WALL ELEVATION NUMBER / SHEET NUMBER
WOOD MEMBER CONT.
WOOD MEMBER BLOCKING
0'- 0" ELEV. BOTTOM OF FTG.
FINISH FLOOR LINE
WALL ELEVATION NO. / SHT.NO. WHERE DRAWN
MOMENT CONNECTION

KEVIN B. COZAD AND ASSOCIATES, INC.
STRUCTURAL and CIVIL ENGINEERS
25388 San Jacinto Street Suite 101 • Hemet, CA 92343 • (714) 652-4164

Revisions:

Approved By:
REGISTERED CIVIL ENGINEER NO. 24169
REGISTERED STRUCT. ENG. NO. 2418
Date 8-7-90

CITY OF RIVERSIDE
BOBBY BONDS COMMUNITY CENTER
AUDITORIUM & GYMNASIUM
SPECIFICATIONS

Designed: J.P.
Drawn: A.N.L.
Checked: J.P.
Scale: NO SCALE
Date: 8-7-90
Sheet No. S-1 OF 3 SHEETS
FILE NO. 90-0645

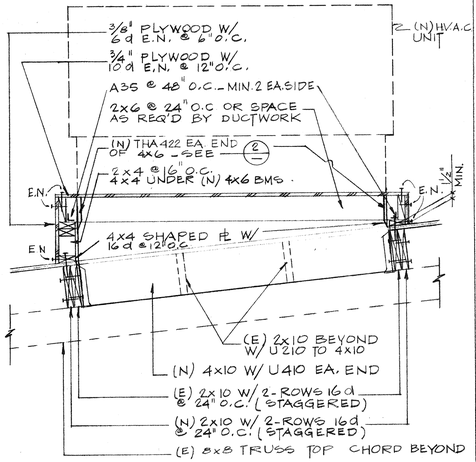

SECTION THRU MECH. UNIT PLATFORM (1)
3/4" = 1'-0"

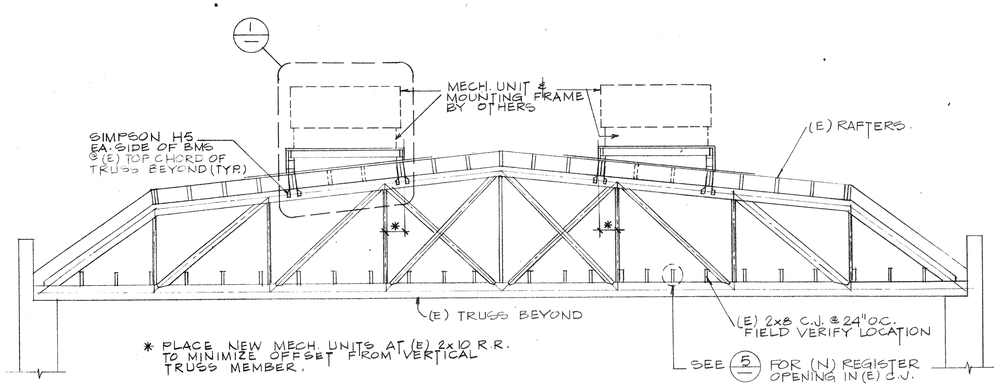

SECTION (A)
1/4" = 1'-0"

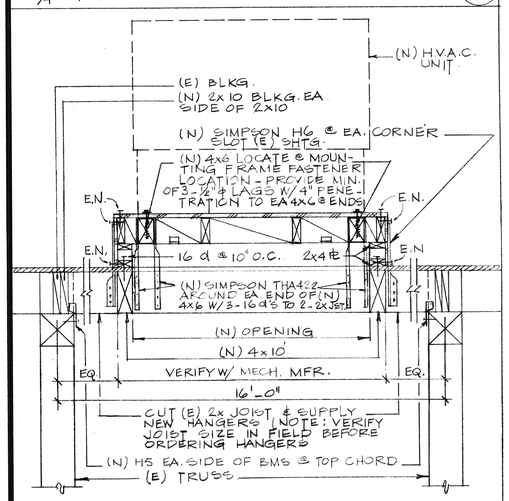

SECTION THRU MECH. UNIT PLATFORM (2)
3/4" = 1'-0"

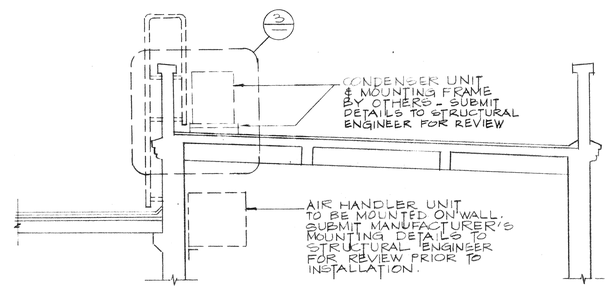

SECTION (B)
1/4" = 1'-0"

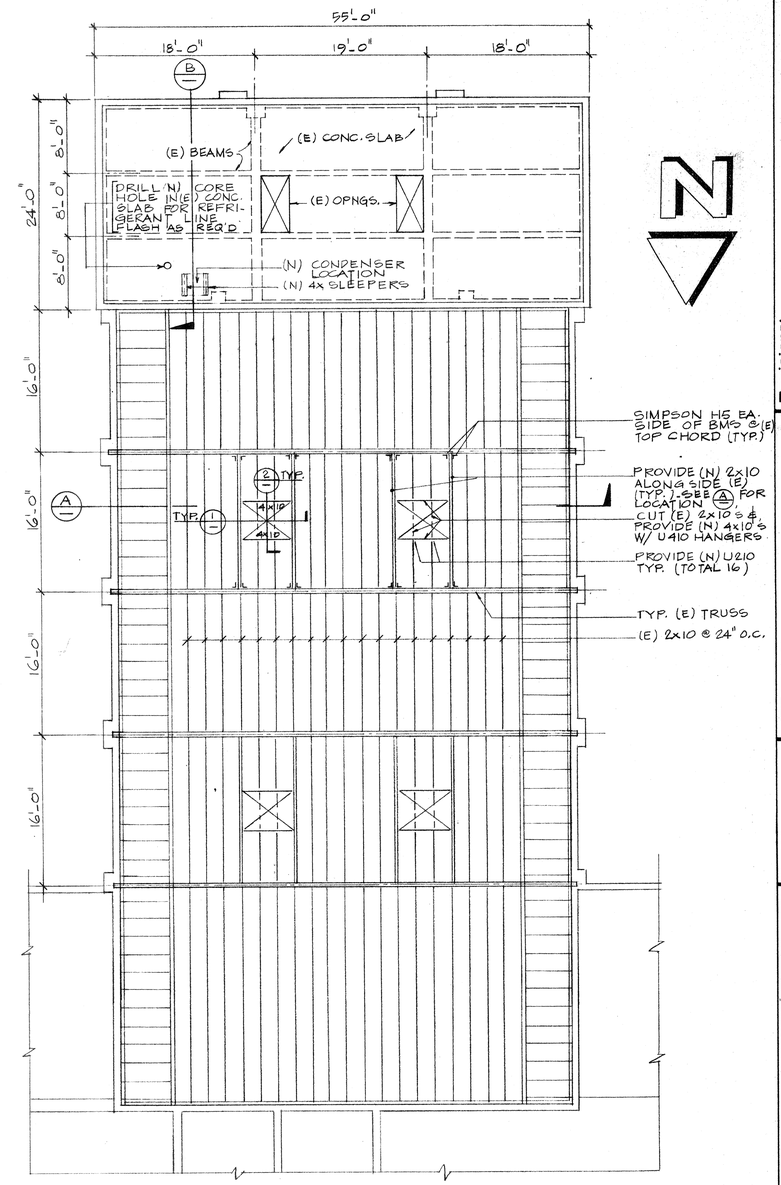

EXIST. ROOF FRAMING PLAN
1/8" = 1'-0"

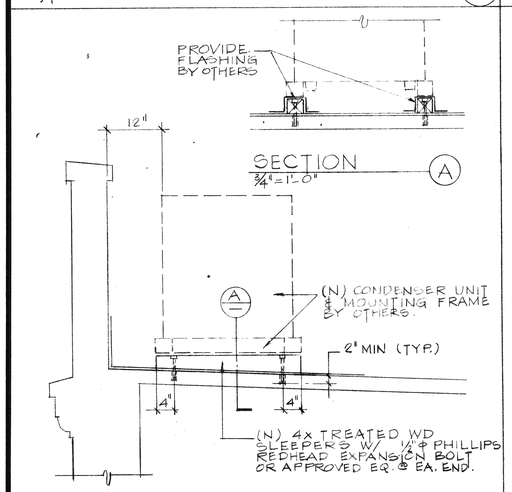

SECTION (A)
3/4" = 1'-0"

SECTION THRU MECH. UNIT PLATFORM (3)
3/4" = 1'-0"

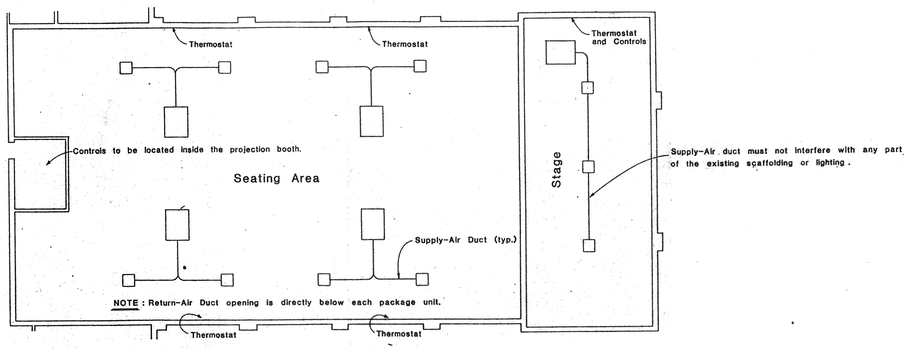

* ACTUAL DUCT SIZING, STRAPPING, RETURN-AIR GRILLE MOUNTING, AND SUPPLY. AIR GRILLE MOUNTING SHALL BE THE SOLE RESPONSIBILITY OF THE A/C CONTRACTOR. ALL SHOP DRAWINGS PERTAINING TO THE A/C UNITS AND ALL RELATED EQUIPMENT SHALL BE SENT TO BOTH THE CITY AND THE STRUCTURAL ENGINEER FOR REVIEW. SEE SPECIFICATION FOR OTHER REQUIREMENTS.

PRELIMINARY DUCT LAYOUT * (4)
NO SCALE

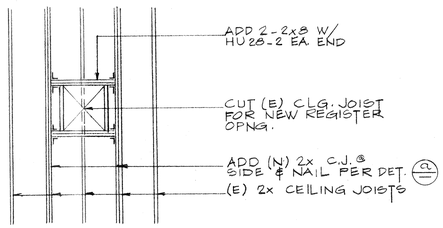

TYP. OPENING IN EXISTING CEILING JOIST (5)
1/4" = 1'-0"

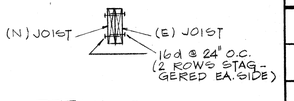

DETAIL a
3/4" = 1'-0"

Revisions:

KEVIN B. COZAD AND ASSOCIATES, INC.
STRUCTURAL and CIVIL ENGINEERS
151 South Girard Street • Hemet, Ca 92344 • (714) 652-4454

Approved By:
Date 8-7-90
REGISTERED CIVIL ENGINEER NO. 26159
REGISTERED STRUCT. ENG. NO. 2418

CITY OF RIVERSIDE
BOBBY BONDS COMMUNITY CENTER AUDITORIUM

A.C. ROOF FRAMING PLAN
SECTIONS AND DETAILS

Designed: M.D.F.
Drawn: A.N.L.
Checked: J.P.
Scale: AS NOTED
Date: 8-7-90
Sheet No. S-2 OF 3 SHEETS
FILE NO. 90-0648

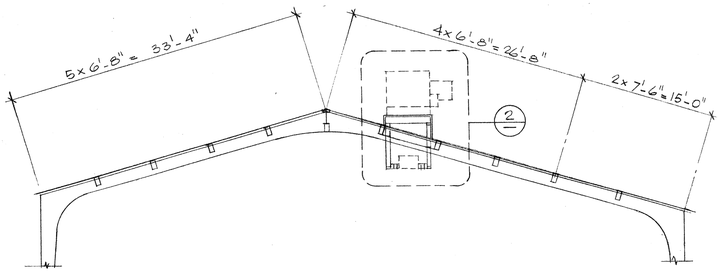

SECTION A
1/8" = 1'-0"

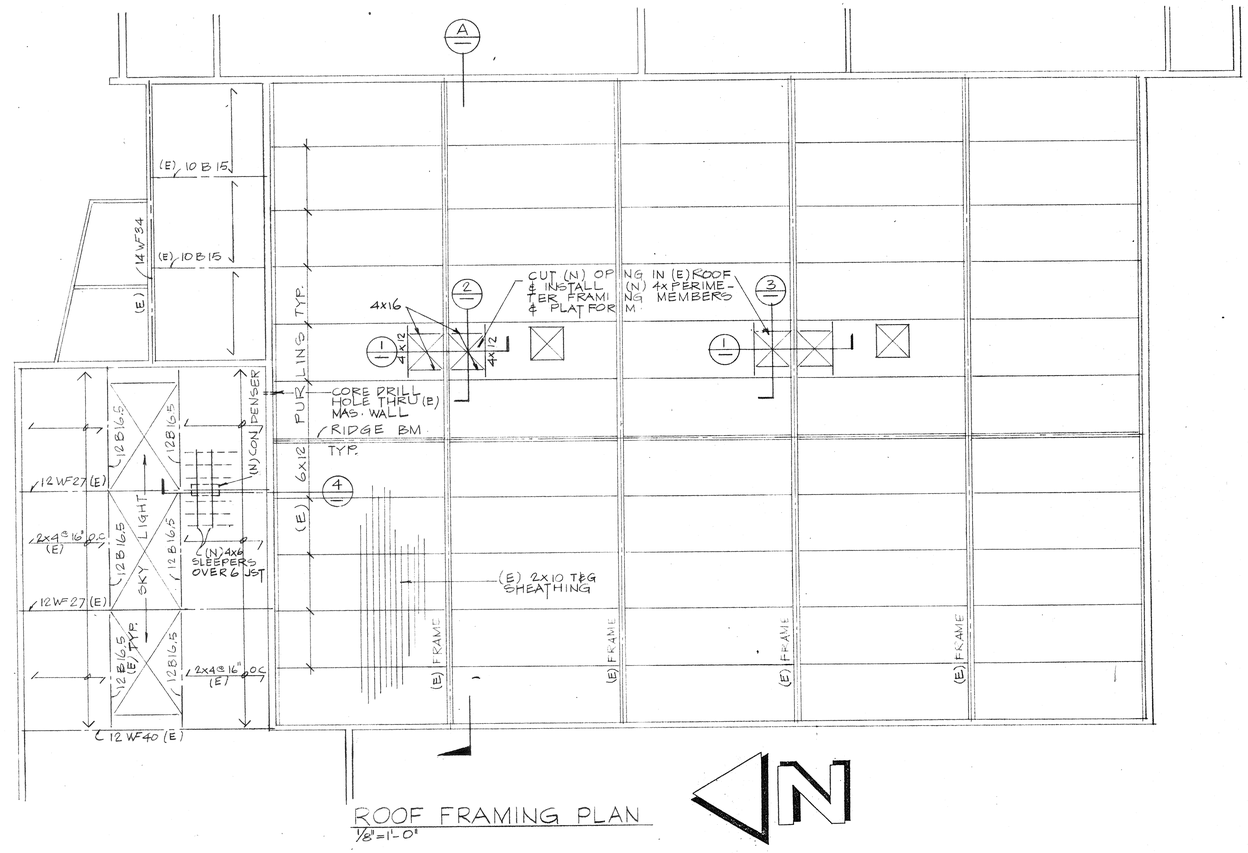

ROOF FRAMING PLAN
1/8" = 1'-0"

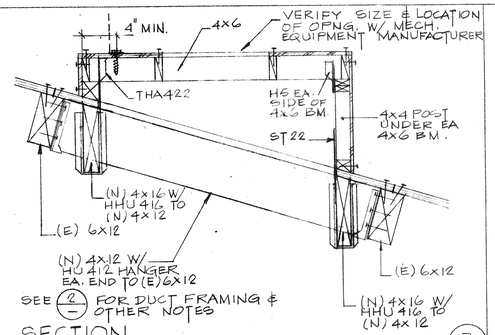

SEE 2 FOR DUCT FRAMING & OTHER NOTES

SECTION 3
3/4" = 1'-0"

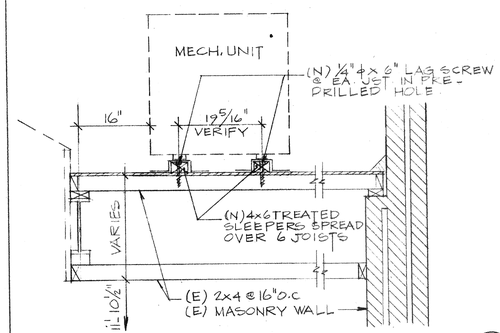

SECTION 4
3/4" =

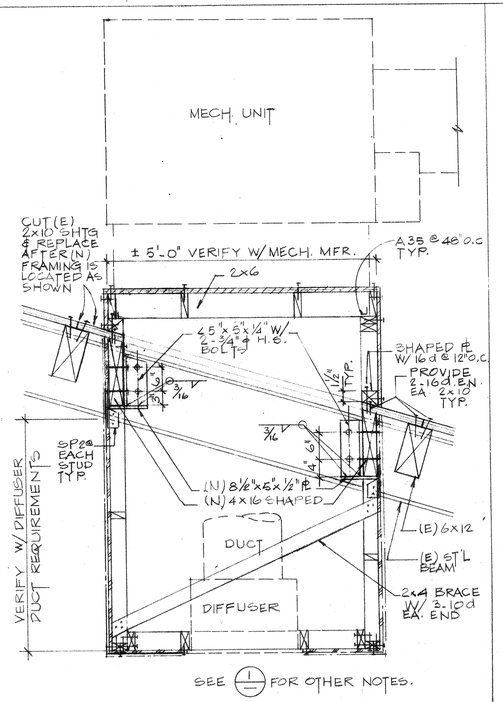

SEE 1 FOR OTHER NOTES.

SECTION 2
3/4" = 1'-0"

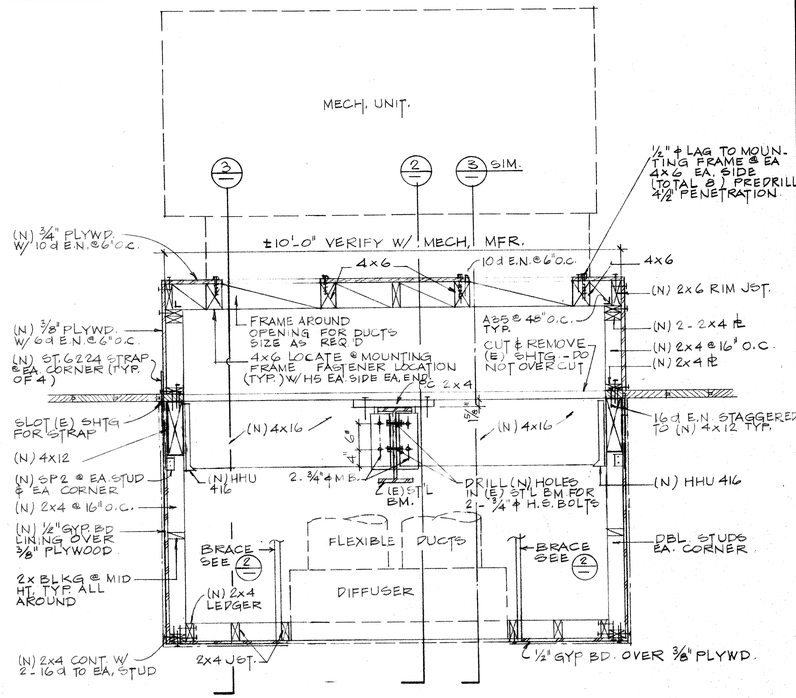

SECTION 1
3/4" = 1'-0"

Revisions:

KEVIN B. COZAD AND ASSOCIATES, INC.
STRUCTURAL and CIVIL ENGINEERS
151 South Girard Street • Hemet, Ca 92344 • (714) 652-4454

Approved By:

Date 8-7-90

REGISTERED CIVIL ENGINEER NO. 26159
REGISTERED STRUCT. ENG. NO. 2418

CITY OF RIVERSIDE
BOBBY BONDS COMMUNITY CENTER
GYMNASIUM

A.C. ROOF FRAMING PLAN, SECTIONS AND DETAILS

Designed: M.D.F.
Drawn: A.N.L.
Checked: J.P.
Scale: AS NOTED
Date: 8-7-90
Sheet No. S-3 OF 3 SHEETS
FILE NO. 90-0645

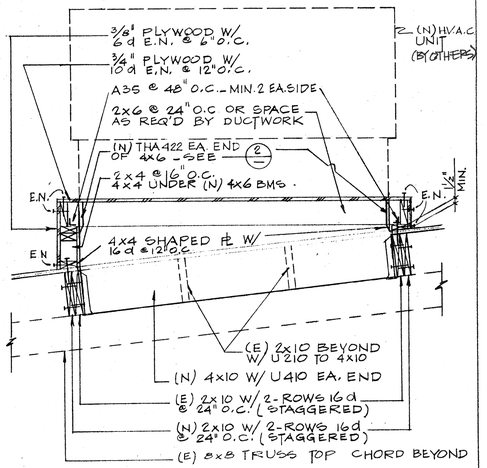

SECTION THRU MECH. UNIT PLATFORM (1)
3/4" = 1'-0"

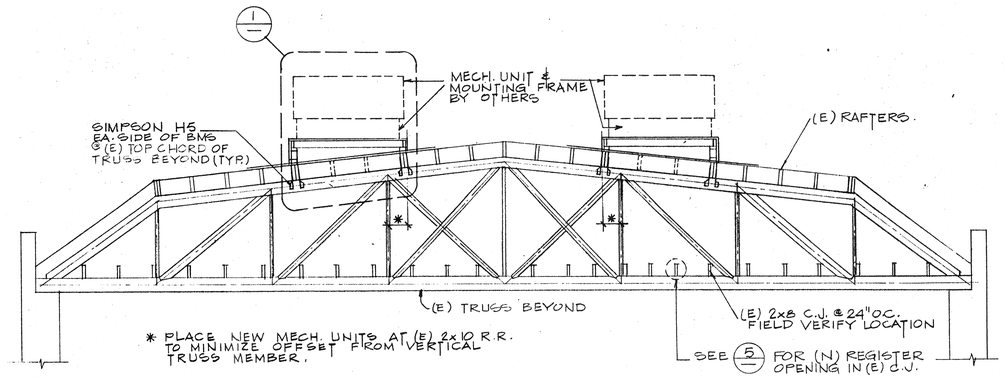

SECTION (A)
1/4" = 1'-0"

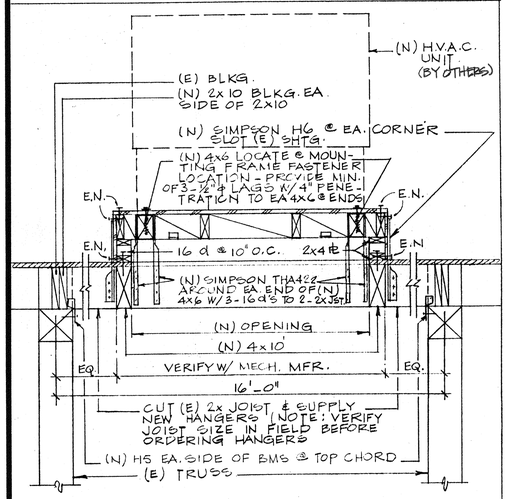

SECTION THRU MECH. UNIT PLATFORM (2)
3/4" = 1'-0"

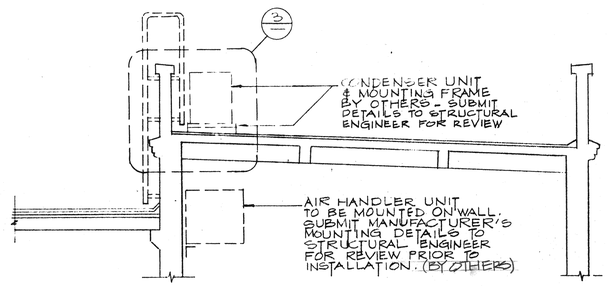

SECTION (B)
1/4" = 1'-0"

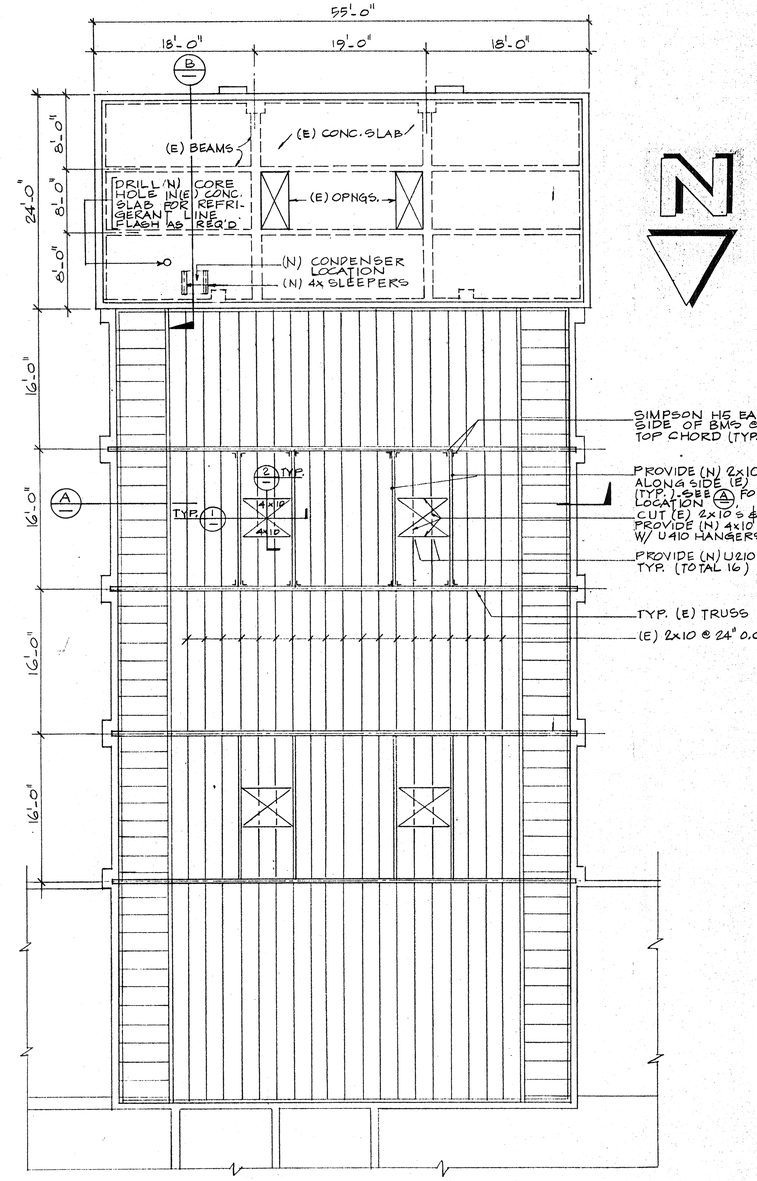

EXIST. ROOF FRAMING PLAN
1/8" = 1'-0"

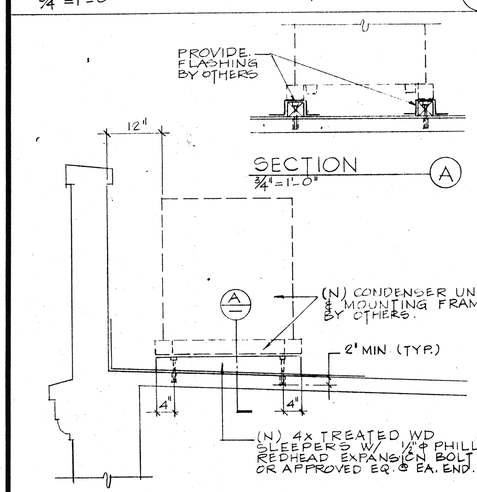

SECTION (A)
3/4" = 1'-0"

SECTION THRU MECH. UNIT PLATFORM (3)
3/4" = 1'-0"

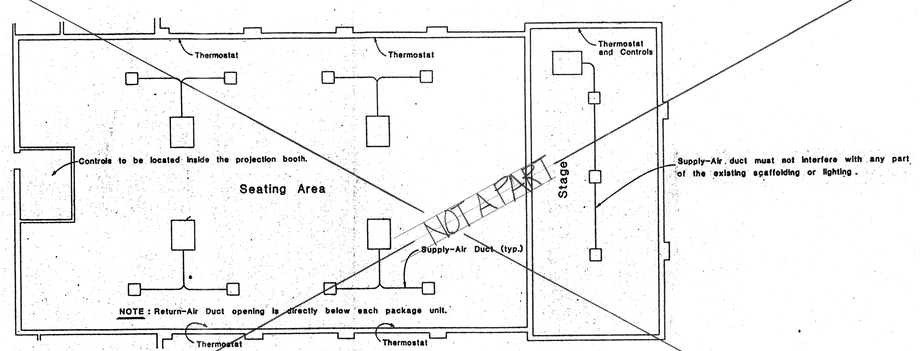

* ACTUAL DUCT SIZING, STRAPPING, RETURN-AIR GRILLE MOUNTING, AND SUPPLY. AIR GRILLE MOUNTING SHALL BE THE SOLE RESPONSIBILITY OF THE A/C CONTRACTOR. ALL SHOP DRAWINGS PERTAINING TO THE A/C UNITS AND ALL RELATED EQUIPMENT SHALL BE SENT TO BOTH THE CITY AND THE STRUCTURAL ENGINEER FOR REVIEW. SEE SPECIFICATION FOR OTHER REQUIREMENTS.

PRELIMINARY DUCT LAYOUT * (4)
NO SCALE

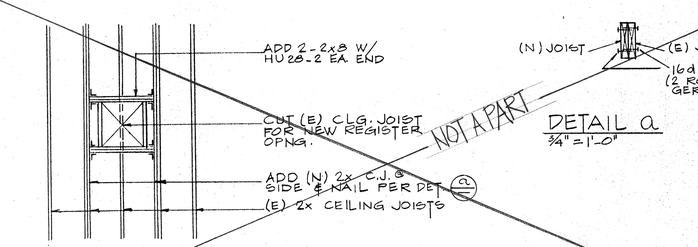

DETAIL a
3/4" = 1'-0"

TYP. OPENING IN EXISTING CEILING JOIST (5)
1/4" = 1'-0"

Revisions:

KBC
KEVIN B. COZAD AND ASSOCIATES, INC.
STRUCTURAL and CIVIL ENGINEERS
151 South Girard Street • Hemet, Ca 92344 • (714) 652-4454

Approved By:
Date 8-7-90
REGISTERED CIVIL ENGINEER NO. 26159
REGISTERED STRUCT. ENG. NO. 2418

CITY OF RIVERSIDE
BOBBY BONDS COMMUNITY CENTER AUDITORIUM

A.C. ROOF FRAMING PLAN
SECTIONS AND DETAILS

Designed: M.D.F.
Drawn: A.N.L.
Checked: J.P.
Scale: AS NOTED
Date: 8-7-'90
Sheet No. SM-1 OF 1 SHEETS
FILE NO. 90-0648

P-0313