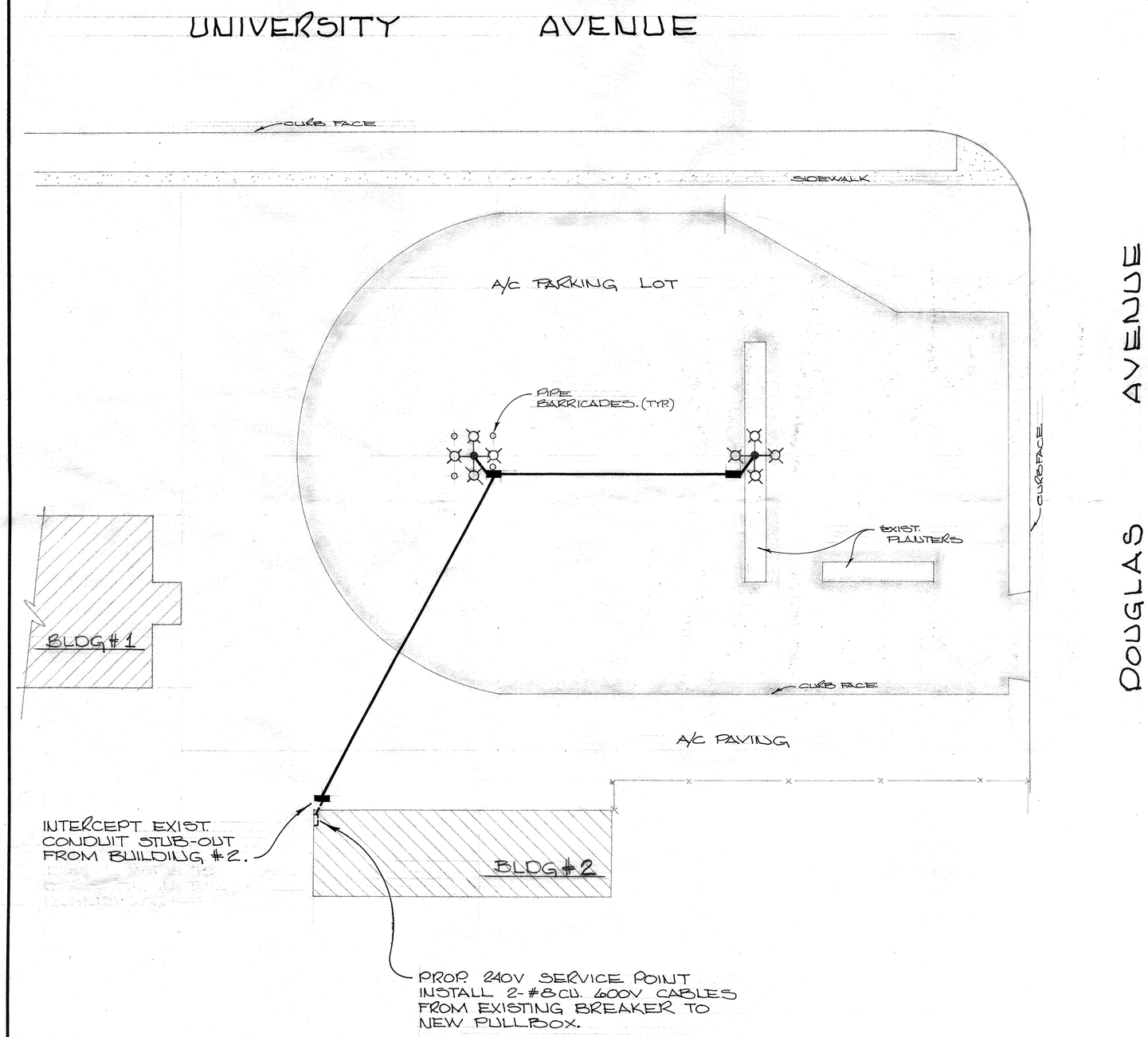

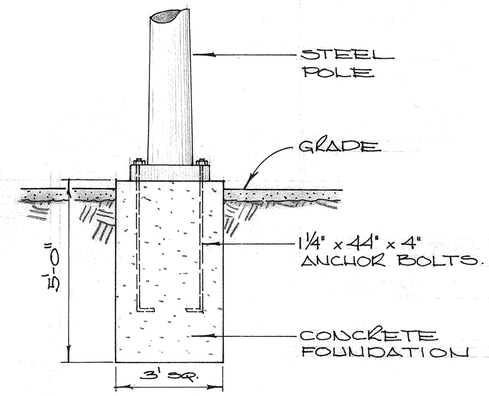

FOUNDATION DETAIL

NOTES

1. INSTALL ALL PARKING LOT LIGHTING FACILITIES AS SHOWN AND IN CONFORMANCE WITH CITY OF RIVERSIDE PUBLIC UTILITIES DEPT. STREET LIGHT SPEC. 119.
2. THE 400WATT LUMINAIRES, LAMPS AND PHOTO CONTROLS WILL BE FURNISHED TO THE CONTRACTOR BY THE CITY, AT CENTRAL STORES, 8095 LINCOLN AVE RIVERSIDE, CA.
3. ALL PARKING LOT LIGHTING FACILITIES TO BE FIELD LOCATED.

PLAN LEGEND

40'-10 OR 11 GAUGE, TAPERED, GALVANIZED STEEL POLE COMPLETE WITH 4' QUAD ARMS-PUMCO CAT. #FB-1140BBBB1-4 OR AMERICAN CAT. #A-404DD AND 4-400 WATT HIGH PRESSURE SODIUM VAPOR LUMINAIRES COMP. WITH PHOTO CONTROLS & LAMPS. INSTALL PER. FOUNDATION DETAIL.

1" RIGID STEEL GALV. CONDUIT WITH 2 #8CU. 600V CABLES.

PULLBOX PER ITEM #P1 OF UGS-800, SHEET 2 OF 2.

PIPE BARRICADES PER UGS-290.

BOBBY BONDS PARK AND SPORTS COMPLEX
PARKING LOT LIGHTING
UNIVERSITY AVE. & DOUGLAS DR.

SCALE 1" = 30'	DRAWN PAYNE	CITY OF RIVERSIDE DEPARTMENT OF PUBLIC UTILITIES	
DATE	CHECKED		
JOB No 4965	APPROVED	E DIV.	DRAWING NO. L4-4965
Map No #44	PARKS DEPT.		

APPRVD	REVISIONS	DATE

DRAWING NUMBER BOB
PLAN HOLD CORPORATION • IRVINE, CALIFORNIA
REORDER BY NUMBER 075AR

DRAWING NUMBER
PLAN HOLD CORPORATION • IRVINE, CALIFORNIA
REORDER BY NUMBER 075AR

DRAWING NUMBER BB-115
PLAN HOLD CORPORATION • IRVINE, CALIFORNIA
REORDER BY NUMBER 075AR