FIRE DEPARTMENT CONNECTION (FDC) AND CONTROL VALVE INSTALLATION

DATE: February 17, 2010
INFORMATION BULLETIN: D-09-004
APPROVED BY:

This information bulletin is to provide guidelines regarding the installation requirements, identification and location of automatic fire sprinkler system water supply appurtenances.

1. **Post Indicator Valves (PIV's)**
   a. Post indicating valves servicing private on-site fire service mains shall be no less than 40' from a structure.
      Exception: When the space is unavailable to maintain the separation from the building, PIV's may be installed closer or mounted on the building wall, providing the exterior wall of the building has no unprotected openings within 20' or protected openings within 10' of the valve(s).
   b. The installation height of the PIV shall be 36" to 48" above the adjacent grade to the PIV handle's socket.
   c. Protection of the FDC is required in accordance with CFC section 312 when the FDC's are subject to impact from vehicular traffic.
   d. For working clearance, an unobstructed 3-foot radius shall be maintained around the PIV.

2. **Indicating sprinkler system control valves: (Other than PIV's)**
   a. Indicating valves may be located within fire resistant stair shafts which provide access to fire department personnel from the exterior, provided: (1) the valve is monitored by the fire alarm system; (2) the valve is recessed into the wall, equipped with 12" x 12" or larger fire rated access panel and the access panel is identified by a metal sign stating "sprinkler control valve_floor". The sign's lettering shall be white no less than 2" in height with a 3/8-inch stroke and with a red background. Stick-on type letters are not permitted.
   b. Indicating control valves may be located within rooms of limited combustible construction, provided that the room has an exterior access door and any door, which opens to the interior of the building, must be solid and self-closing. Doors must be labeled on the outside of the room: "Control Valve Inside".
   c. Indicating valves of a fire line service shall be installed on the system side of the detector check. When there is more than one riser on the system, each riser shall have a separate indicating valve, in addition to the main control valve or the underground supply.

3. **Fire Department Connections (FDC's)**
   a. FDC's shall be located at least 50' from the building being protected and at least 6' from the PIV's.

      EXCEPTION: When FDC's cannot be installed with the required clearance, they shall be permitted to be located closer or wall mounted, provided they are installed on a wall without openings within 20'. Openings within 20' of the FDC will only be allowed, if the opening has a fire resistance of one-hour.
   b. FDC's shall not be installed where there is the possibility of injury by falling objects. FDC's shall not be permitted below and within 20' of signage, cornices, soffits, balconies or other cantilevered objects.
   c. FDC's shall be installed so that the centerlines of the inlets are located at a minimum height of 24" and a maximum height of 36" above the adjacent finish grade.
   d. FDC's shall be installed on the system side of the indicating valves.
   e. Fire Flow

      The number and size of FDC inlets shall be determined by the fire flow of the sprinkler system and /or standpipe system. Interior hose streams shall be included in the sprinkler demand for determining the number and size of inlets when standpipes and /or hose stations are a part of the sprinkler system.

      Any sprinkler system with a required water flow below 750 gpm requires that the FDC be equipped with (2) 2-1/2 inch female swivel Inlets. The threads shall be 2.5-7.5 American National Hose connection screw threads (NH). The riser to the FDC must be 4" diameter pipe.

      Any sprinkler system with a required water flow greater than 750 gpm requires that the FDC be equipped with (2) 2-1/2 in female swivel (2.5-7.5 NH) inlets and one 4-inch female swivel (4-4 NH) inlet. The riser to the FDC's must be 6" diameter pipe. A list check valve device shall be installed at each inlet, in addition to the clapper.

      If the on-site water main supplies both the fire sprinkler system and the in-site fire hydrants, an FDC as noted in the above paragraph is required.

      Protection of the FDC is required in accordance with CFC section 312 when the FDC's are subject to impact from vehicular traffic.

      For working clearance, an unobstructed radius of 3-feet shall be maintained around the FDC.

4. **Signage**
   a. All indicating valves, including PIV's and fire department connections shall be identified in accordance with this document and City of Riverside Fire Department Information Bulleting D-09-003.

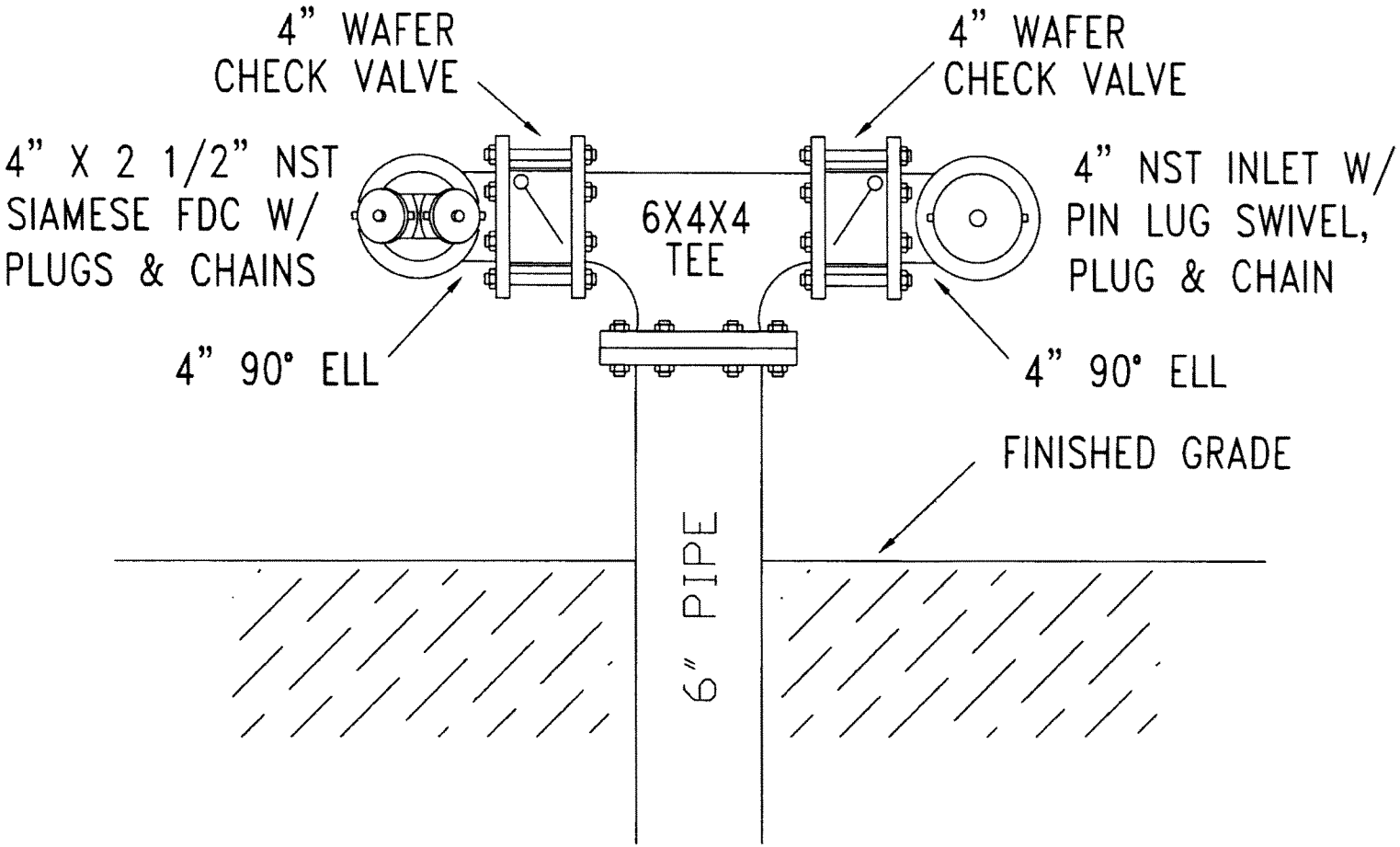

6" X 4" X 2 1/2" X 2 1/2"

FIRE DEPARTMENT CONNECTION

NO SCALE