PARKING STRUCTURE ARCHITECTURAL, ELECTRICAL, MECHANICAL, PLUMBING, AND STRUCTURAL PLANS AND SPECIFICATIONS

PARKING STRUCTURE
ARCHITECTURAL PLANS

CITY of RIVERSIDE

FOX ENTERTAINMENT PLAZA / PHASE II

Parking Garage

3601 MARKET STREET - RIVERSIDE, CALIFORNIA 92501

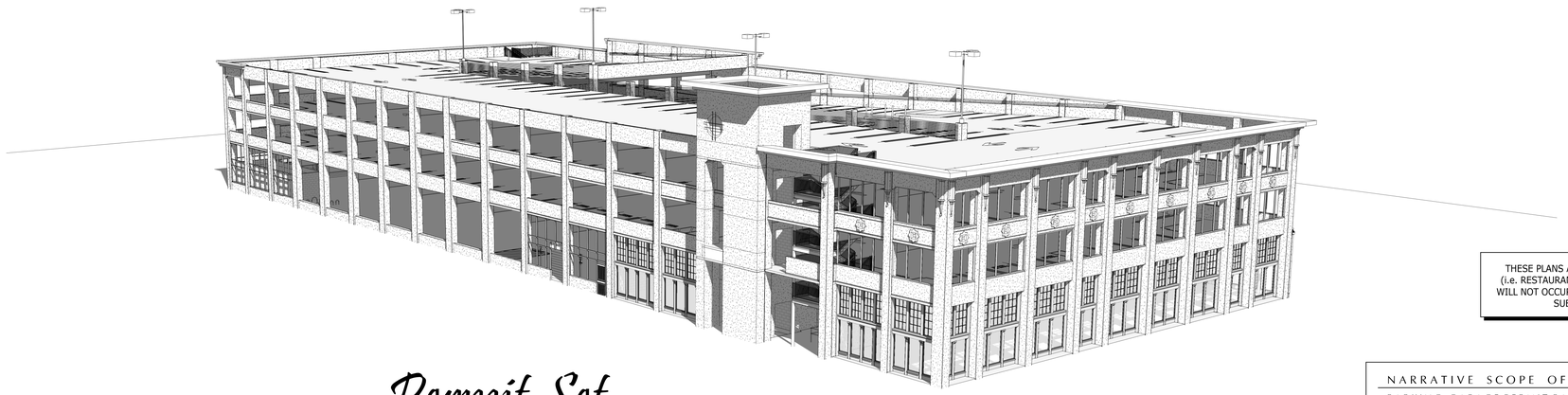

LICENSED ARCHITECT
SCOTT BARTON YEAMAN
C-22700
EXP. 9-30-13
STATE OF CALIFORNIA

THESE PLANS ARE FOR THE 'SHELL ONLY' PERMIT OF THE OCCUPANCY OF NON-PARKING AREAS (i.e. RESTAURANT AREA LOCATED ON LEVEL P-1). THE OCCUPANCY OF THE NON-PARKING AREAS WILL NOT OCCUR UNTIL AFTER THE COMPLETION OF TENANT IMPROVEMENTS, WHICH WILL BE THE SUBJECT OF FUTURE SEPARATE SUBMITTALS UNDER SEPARATE PERMITS.

Permit Set

September 15, 2011

owner

CITY of RIVERSIDE

design-build contractor

BAYLEY CONSTRUCTION

design architect

DLR GROUP / WWCOT

civil engineer

RICK ENGINEERING

parking consultant/architect

PACIFIC PARKING DESIGN

structural engineer

PACIFIC PARKING DESIGN

mechanical/electrical/plumbing consultant

GLUMAC ENGINEERS

NARRATIVE SCOPE OF WORK

PARKING GARAGE PERMIT PACKAGE
INCLUDING GROUND LEVEL STORAGE AND RESTAURANT SPACE

PROJECT DESCRIPTION

THE FOX ENTERTAINMENT PLAZA consists of a freestanding two-story EXHIBIT HALL / BLACK BOX building and a freestanding four-level OPEN PARKING GARAGE (with ground level storage and restaurant space). The entire project is considered as portions of one building per CBC Sec. 503.1.2 and as such the type of construction for the aggregate building and the area and height allowances are determined under that methodology. [see sheet B-G003 for the allowable building height and area tabulation and the aggregate area totals and building height tabulations for the buildings] the project shall be designed as separated occupancies per CBC Sec. 508.4 and occupancies will be separated per CBC Sec. 508.4.4.

The two freestanding buildings will be permitted separately even though they are considered as portions of one building. See sheets PA-0.0 and PA-0.1 for code specific occupant and exiting information regarding the parking structure building and sheet B-G003 for code specific occupant and exiting information regarding the exhibit hall / black box building.

The PARKING GARAGE PERMIT PACKAGE consists a the free standing three-story building with an occupied roof (four parking levels) 395 car open parking garage with ground level moderate hazard storage and "shell only" restaurant space.

The project is designed as a cast-in-place long span concrete-framed structure.

Floor framing consists of cast-in-place post-tensioned beams and/or girders and cast-in-place post-tensioned concrete slabs.

Gravity loads are carried by cast-in-place concrete columns.

Seismic loads are resisted by concrete moment frames.

The structure will be generally supported on spread or continuous footings.

OCCUPANCY GROUPS

Occupancy group per the California Building Code are:

"S-2" open parking as defined in Section 311.3 & 406.3.

"S-1" moderate hazard storage as defined in Section 311.2.

"A-2" assembly uses intended for food and/or drink consumption as defined in Section 303.1.

OCCUPANCY LOAD

Total Occupant Load for Parking Areas: 720 occupants

Maximum Design Occupant Load at Level P-4 is: 202 occupants

Total Occupant Load for Storage Area: 9 occupants

Total Occupant Load for Restaurant Area: 800 occupants *

* Based on gross area at 15 sq.ft. per occupant and does not factor in kitchen, storage or service areas. Actual occupant load will be less.

USES of BUILDING

"S-2" - Parking of private vehicles

"S-1" - Moderate Hazard Storage Area [Completed theatre sets, furniture, lumber, building materials for set construction etc. (excluding paints, solvents or similar products)]

"A-2" - Future Restaurant Space

TYPE of CONSTRUCTION

The Construction is to be Type IIB - Sprinklered

AREA of BUILDING

The total area of the parking garage building (including ground level storage and restaurant spaces): 158,387 sq.ft.

HEIGHT of BUILDING

The Height of the Parking Garage Building is:

45'-2" measured to the top of concrete spandrel at Level P-4.

45'-10" measured to the top of the facade.

56'-0" measured to the top of the elevator hoistway roof.

CODE REQUIREMENTS

This parking garage shall comply with the:

- California Administrative Code (CAC) Title 24
- 2010 California Building Code (2009 IBC)
- 2010 California Mechanical Code (2009 UMC)
- 2010 California Plumbing Code (2009 UPC)
- 2010 California Electrical Code (2008 NEC)
- 2010 California Fire Code (2009 IFC)
- 2010 California Green Building Standards Code (CALGREEN)
- Americans with Disabilities Act Accessibility Guidelines for Buildings and Facilities 2004 (ADAAG)
- Ordinances, requirements, and building codes as amended by the City of Riverside, the County of Riverside, and the State of California.

PARKING GARAGE SHEET INDEX

SHEET NUMBER	SHEET NAME	DESIGN DEVELOPMENT	PLAN CHECK	PERMIT SET	REV 01	REV 02
STRUCTURAL SHEETS						
PS-1.1	GENERAL NOTES	•	•	•		
PS-2.1	TYPICAL REBAR SCHEDULES and DETAILS	•	•	•		
PS-2.2	TYPICAL FOUNDATION DETAILS	•	•	•		
PS-2.3	TYPICAL ELEVATED CONCRETE REBAR SLAB DETAILS	•	•	•		
PS-2.4	TYPICAL POST-TENSIONED CONCRETE SLAB DETAILS	•	•	•		
PS-2.5	TYPICAL MASONRY DETAILS		•	•		
PS-3.1	LEVEL P-1 FOUNDATION PLAN	•	•	•		
PS-3.2	LEVEL P-2 FRAMING PLAN	•	•	•		
PS-3.3	LEVEL P-3 FRAMING PLAN	•	•	•		
PS-3.4	LEVEL P-4 FRAMING PLAN	•	•	•		
PS-4.1	EAST-WEST RUNNING CONCRETE FRAME ELEVATIONS	•	•	•		
PS-4.2	NORTH-SOUTH RUNNING CONCRETE FRAME ELEVATIONS	•	•	•		
PS-4.3	CONCRETE FRAME COLUMN SCHEDULE and DETAILS	•	•	•		
PS-4.4	CONCRETE FRAME COLUMN DETAILS		•	•		
PS-5.1	GRAVITY COLUMN SCHEDULE and DETAILS	•	•	•		
PS-6.1	BEAM ELEVATIONS	•	•	•		
PS-6.2	BEAM ELEVATIONS	•	•	•		
PS-7.1	ENLARGED STAIR/ELEVATOR PLANS		•	•		
PS-8.1	MISCELLANEOUS DETAILS		•	•		
MECHANICAL SHEETS						
P-M000	MECHANICAL LEAD SHEET		•	•		
P-M001	MECHANICAL EQUIPMENT SCHEDULES & DETAILS		•	•		
P-M201	MECHANICAL PARKING GARAGE LEVEL P-1 & P-2		•	•		
PLUMBING SHEETS						
P-P000	PLUMBING LEAD SHEETS & DETAILS		•	•		
P-P001	PLUMBING SITE PLAN		•	•		
P-P201	PLUMBING PARKING GARAGE LEVEL P-1		•	•		
P-P202	PLUMBING PARKING GARAGE LEVEL P-2		•	•		
P-P203	PLUMBING PARKING GARAGE LEVEL P-3		•	•		
P-P204	PLUMBING PARKING GARAGE LEVEL P-4		•	•		
P-P301	PLUMBING STORM DRAIN RISER DIAGRAM		•	•		
ELECTRICAL SHEETS						
P-E000	ELECTRICAL LEAD SHEET		•	•		
P-E001	SINGLE LINE DIAGRAM		•	•		
P-E002	PANEL SCHEDULES		•	•		
P-E100	ELECTRICAL SITE PLAN		•	•		
P-E201	POWER PLAN - LEVEL P-1		•	•		
P-E301	LIGHTING PLAN - LEVEL P-1		•	•		
P-E302	LIGHTING PLAN - LEVEL P-2		•	•		
P-E303	LIGHTING PLAN - LEVEL P-3		•	•		
P-E304	LIGHTING PLAN - LEVEL P-4		•	•		
P-E401	EMERGENCY PHOTOMETRIC PLAN - LEVEL P-1		•	•		
P-E402	EMERGENCY PHOTOMETRIC PLAN - LEVEL P-2		•	•		
P-E403	EMERGENCY PHOTOMETRIC PLAN - LEVEL P-3		•	•		
P-E404	EMERGENCY PHOTOMETRIC PLAN - LEVEL P-4		•	•		
P-E500	ELECTRICAL DETAILS		•	•		
P-E501	ELECTRICAL DETAILS		•	•		
P-E600	LIGHTING FIXTURE SCHEDULE & TITLE 24		•	•		

PARKING GARAGE SHEET INDEX

SHEET NUMBER	SHEET NAME	DESIGN DEVELOPMENT	PLAN CHECK	PERMIT SET	REV 01	REV 02
GENERAL SHEETS						
COVER	COVER SHEET	•	•	•		
PT-1	PARKING GARAGE SHEET INDEX	•	•	•		
ARCHITECTURAL SHEETS						
PA-0.0	CODE SHEET		•	•		
PA-0.1	EXITING PLANS	•	•	•		
PA-0.2	EXITING PLANS		•	•		
B-G003	CODE ANALYSIS / EGRESS PLAN		•	•		
PA-0.3	CAR COUNT and AREA SUMMARY and NATURAL VENTILATION SUMMARY	•	•	•		
PA-0.4	CAR COUNT PERSPECTIVES	•	•	•		
PA-0.5	SYMBOLS KEY, MATERIALS KEY & ABBREVIATIONS		•	•		
PA-0.6	DISABLED ACCESS NOTES		•	•		
PA-0.7	DISABLED ACCESS NOTES		•	•		
PA-1.1	COMPOSITE SITE PLAN (FOR REFERENCE)	•	•	•		
PA-1.2	PARKING GARAGE SITE PLAN	•	•	•		
PA-2.1	LEVEL P-1 STRIPING PLAN	•	•	•		
PA-2.2	LEVEL P-2 STRIPING PLAN	•	•	•		
PA-2.3	LEVEL P-3 STRIPING PLAN	•	•	•		
PA-2.4	LEVEL P-4 STRIPING PLAN	•	•	•		
PA-3.1	LEVEL P-1 FLOOR PLAN	•	•	•		
PA-3.2	LEVEL P-2 FLOOR PLAN	•	•	•		
PA-3.3	LEVEL P-3 FLOOR PLAN	•	•	•		
PA-3.4	LEVEL P-4 FLOOR PLAN	•	•	•		
PA-3.5	LEVEL P-4 CORNICE and HOISTWAY ROOF PLAN	•	•	•		
PA-4.1	NORTH BUILDING ELEVATIONS	•	•	•		
PA-4.2	SOUTH BUILDING ELEVATIONS	•	•	•		
PA-4.3	EAST and WEST BUILDING ELEVATIONS	•	•	•		
PA-4.4	ENLARGED BUILDING ELEVATIONS (NORTH)	•	•	•		
PA-4.5	ENLARGED BUILDING ELEVATIONS (SOUTH)	•	•	•		
PA-4.6	ENLARGED BUILDING ELEVATIONS (EAST)	•	•	•		
PA-4.7	ENLARGED BUILDING ELEVATIONS (WEST)		•	•		
PA-5.1	LONGITUDINAL BUILDING SECTIONS	•	•	•		
PA-5.2	TRANSVERSE BUILDING SECTIONS	•	•	•		
PA-5.3	TRANSVERSE BUILDING SECTIONS	•	•	•		
PA-5.4	TRANSVERSE BUILDING SECTIONS	•	•	•		
PA-6.01	TYPICAL SECTION DETAILS		•	•		
PA-6.02	TYPICAL SECTION DETAILS		•	•		
PA-6.1	WALL SECTIONS	•	•	•		
PA-6.2	WALL SECTIONS	•	•	•		
PA-6.3	WALL SECTIONS	•	•	•		
PA-6.4	WALL SECTIONS	•	•	•		
PA-6.5	WALL SECTIONS	•	•	•		
PA-6.6	WALL SECTIONS	•	•	•		
PA-6.7	WALL SECTIONS	•	•	•		
PA-6.8	WALL SECTIONS	•	•	•		
PA-7.1	ELEVATOR & STAIR NO.1 - ENLARGED PLANS	•	•	•		
PA-7.2	STAIR NO.2 - ENLARGED PLANS	•	•	•		
PA-7.3	ELECTRICAL ROOM and RESTROOM - ENLARGED PLANS		•	•		
PA-7.4	ENLARGED PLANS and PERSPECTIVES	•	•	•		
PA-7.5	HOISTWAY and STAIR #1 SECTION	•	•	•		
PA-7.6	STAIR SECTIONS	•	•	•		
PA-7.7	ELEVATOR and STAIR PERSPECTIVES	•	•	•		
PA-8.1	TYPICAL STAIR DETAILS		•	•		
PA-8.2	TYPICAL STAIR DETAILS		•	•		
PA-8.3	TYPICAL DETAILS		•	•		
PA-8.4	TYPICAL DETAILS		•	•		
PA-8.5	TYPICAL HOISTWAY DETAILS		•	•		
PA-8.6	DOOR SCHEDULE and DETAILS		•	•		
PA-8.7	ROLL-DOWN GRILLE and GATE SCHEDULES and DETAILS			•		
PA-9.1	TYPICAL STRIPING DETAILS		•	•		
PA-10.01	TYPICAL SIGNAGE DETAILS		•	•		
PA-10.02	TYPICAL SIGNAGE DETAILS					
PA-10.1	LEVEL P-1 SIGNAGE PLAN					
PA-10.2	LEVEL P-2 SIGNAGE PLAN					
PA-10.3	LEVEL P-3 SIGNAGE PLAN					
PA-10.4	LEVEL P-4 SIGNAGE PLAN					
PA-11.1	FACADE DETAILS			•		
PA-11.2	FACADE DETAILS					
PA-11.3	FACADE DETAILS					

Bayley Construction
3730 S. Susan St.
Suite 200
Santa Ana, CA. 92704
CA. License 734880
Tel 714-540-8863
Fax 714-556-8863

Bayley Construction
8005 S.E. 28th St.
P.O. Box 9004
Mercer Island, WA. 98040
WA. License BAYLEC0343C
Tel 206-621-8884
Fax 206-343-7728

BAYLEY CONSTRUCTION

Pacific Parking DESIGN

6 Venture, Suite 275 949.341.0066 t
Irvine, California 92618 949.341.0099 f

DLR Group WWCOT
Architecture Engineering Planning Interiors

4280 Latham Street, Suite H 951.682.0470 t
Riverside, California 92501 951.682.1801 f

LICENSED ARCHITECT
SCOTT BRAYTON HERMAN
C-22700
EXP. 9-30-13
STATE OF CALIFORNIA

Public Agency Submittal:
Issued for Bidding:
Issued for Construction:

Revisions:

A 09.15.2011 PERMIT SET

PHASE II: FOX ENTERTAINMENT PLAZA: PARKING GARAGE

3601 Market Street
Riverside, CA 92501

CITY of RIVERSIDE

CITY OF RIVERSIDE

3900 Main Street, Riverside, CA 92522

Phase:
Revised 04.19.2011
PPD Project № 10-101

PARKING GARAGE SHEET INDEX

Issued Date: 05.02.2011
Drawn By: RTR
Checked By: SBH

PT-1
Sheet №

File Path & Name: C:\Dimension Z\PPD\Projects\2009 - Fox Plaza Parking Structure (Bayley)\Fox PPD Revit\PPD Fox Theater Parking Garage_Owner.rvt
© WWCOT 2009 - Plotted 9/13/2011 9:34:57 AM

FIRE RESISTIVE REQUIREMENTS
(BASED ON TYPE IIB CONSTRUCTION)

A. STRUCTURAL FRAME	TABLE 601	0 – HOUR
Concrete Columns	Table 720.1 (1)	item 5–1.1
Concrete Girders & Beams	Table 720.1 (1)	item 4–1.1, 4.1.2, 5–1.1
B. FLOOR ASSEMBLIES	TABLE 601	0 – HOUR
Concrete Slabs	Table 720.1 (1)	item 4.1.1, 4.1.2, 5–1.1 7–1.2
C. ROOF ASSEMBLIES	TABLE 601	0 – HOUR
Concrete Slabs	Table 720.1 (1)	item 4.1.1, 4.1.2, 5–1.1 7–1.2
Elevator Hoistways	Table 720.1 (3)	item 9–1.1
D. EXTERIOR WALLS		
(S-1 & S-2 OCCUPANCY)		
1. BEARING WALLS		
a. Less than 10 ft.	Table 602	1–hour 2 hours S–1 less than 5'
b. 10 ft. or more	Table 602	0–hour
2. NONBEARING WALLS		
a. Less than 10 ft.	Table 602	1–hour 2 hours S–1 less than 5'
b. 10 ft. or more	Table 602	0–hour
3. OPENINGS (UNPROTECTED)		
a. Less than 5 ft.	Table 704.8	No openings permitted
b. 5 ft. to less than 10 ft.	Table 704.8	25% of Wall Area
c. 10 ft. or more	Table 704.8	No Limit
(A-2 OCCUPANCY)		
1. BEARING WALLS		
a. Less than 10 ft.	Table 602	1–hour
2. NONBEARING WALLS		
a. Less than 10 ft.	Table 602	1–hour
b. 10 ft. or more	Table 602	0–hour
3. OPENINGS (UNPROTECTED)		
a. Less than 3 ft.	Table 704.8	No openings permitted
b. 3 ft. to less than 5 ft.	Table 704.8	15% of Wall Area
c. 5 ft. to less than 10 ft.	Table 704.8	25% of Wall Area
d. 10 ft. to less than 15 ft.	Table 704.8	45% of Wall Area
e. 15 ft. to less than 20 ft.	Table 704.8	75% of Wall Area
f. 30 ft. or more	Table 704.8	No Limit
E. INTERIOR WALLS		
1. BEARING WALLS	TABLE 601	0 – HOUR
Concrete walls	Table 720.1 (2)	item 4–1.1
CMU walls	Table 720.1 (2)	item 3–1.4
2. PERMANENT PARTITIONS	TABLE 601	0 – HOUR
CMU walls	Table 720.1 (2)	item 3–1.4
F. SHAFTS	Sec. 406.3.11	Not required
G. EXIT ENCLOSURES	Sec. 1020.1 exception #5	Not required to be enclosed

SUPPLEMENTAL NOTES

1. ALL DIMENSIONS SHOWN ARE TO THE CENTER LINE OF COLUMNS AND BEAMS, FACE OF CONCRETE BLOCK WALLS, EDGE OF SLAB AND FACE OF STUDS UNLESS OTHERWISE NOTED.
2. FLOOR ELEVATIONS INDICATED ARE TO THE TOP OF THE NOMINAL STRUCTURAL SLAB OR GRADE SLAB UNLESS NOTED. ELEVATIONS DO NOT INCLUDE ADDED THICKNESS AT EDGE OF SLAB OR TOP OF CURBS, ISLANDS OR WALKWAYS UNLESS NOTED.
3. THE VERTICAL DIMENSION FROM THE FINISH FLOOR TO THE UNDERSIDE OF ANY STRUCTURAL ELEMENT, PIPING, ELECTRICAL FIXTURE ETC. SHALL BE 8'–2" MINIMUM IN PARKING STALL AREAS (8'–2" MINIMUM AT ALL DISABLED PARKING SPACES) 8'–2" MINIMUM AT ALL DRIVE AISLES (PARTIAL LEVEL P–1 THROUGH LEVEL P–4).
4. DO NOT SCALE DRAWINGS.
5. ALL VERTICAL PIPE RISERS SHALL BE HELD TIGHT TO THE FACE OF COLUMNS OR WALLS. RISERS PASSING THROUGH SLAB SHALL HAVE A PIPE SLEEVE THAT EXTENDS 1" ABOVE FINISH FLOOR OR SEALED WATERTIGHT.
6. ALL TOP OF FLOOR DRAINS SHALL BE SET 3/4" BELOW ADJACENT FINISH FLOOR ELEVATIONS.
7. ALL STAIR RAILINGS AND GUARDRAILS SHALL HAVE DIVISION RAILS SO THAT A 4" DIAMETER SPHERE CANNOT PASS THROUGH. ALL GUARDRAILS SHALL BE A MINIMUM OF 3'–6" HIGH.
8. STAIR RISERS SHALL BE SOLID, TYPICAL.
9. A PERMIT FROM THE PUBLIC WORKS DEPARTMENT IS REQUIRED FOR A PROTECTION FENCE OR CANOPY ON OR OVER ANY STREET OR PUBLIC SPACE.
10. NO THUMB LATCHES OR KEYED CYLINDER DEAD BOLTS ALLOWED ON ANY DOORS UNLESS OPERATED BY A SINGLE ACTION WITH A LEVER.
11. DOOR HANDLES, LOCKS AND OTHER OPERATING DEVICES SHALL BE INSTALLED AT A MINIMUM 34" AND A MAXIMUM 48" ABOVE THE FINISHED FLOOR.

FIRE PROTECTION NOTES

1. FIRE PROTECTION SYSTEM AND MODIFICATIONS TO BE APPROVED BY FIRE DEPARTMENT PRIOR TO INSTALLATION.
2. ALL REQUIRED PERMITS MUST BE OBTAINED FROM THE FIRE DEPARTMENT BEFORE THE BUILDING IS OCCUPIED. SUBMIT PLANS TO AND OBTAIN PERMIT FROM FIRE DEPARTMENT FOR INSTALLATION OF SPRINKLER SYSTEM PRIOR TO INSTALLATION.
3. FIRE DEPARTMENT SPRINKLER CONNECTION LOCATIONS SHALL BE INSTALLED IN AN AREA APPROVED BY THE FIRE DEPARTMENT.
4. A FIRE ALARM (VISUAL AND AUDIBLE) SYSTEM IS REQUIRED. ANY ALARM SYSTEM MUST BE APPROVED BY THE FIRE DEPARTMENT PLAN CHECK PRIOR TO INSTALLATION.
5. PROVIDE A PORTABLE FIRE EXTINGUISHER WITH A RATING OF NOT LESS THAN 4A:80B:C WITHIN 75 FEET OF TRAVEL DISTANCE TO ALL PORTIONS OF THE BUILDING ON EACH FLOOR. PROVIDE FIRE EXTINGUISHERS DURING CONSTRUCTION COMPLYING WITH THE SAME CRITERIA.
6. PROVIDE PORTABLE FIRE EXTINGUISHERS WITH A RATING OF NOT LESS THAN 10BC FOR ELECTRICAL ROOM AND MECHANICAL ROOM.
7. PROVIDE PORTABLE FIRE EXTINGUISHERS WITH A RATING OF NOT LESS THAN 20A:120B:C LOCATED NOT LESS THAN 10 FEET, NOR MORE THAN 30 FEET FROM ANY FLAMMABLE LIQUID STORAGE AREA OUTSIDE OF A HAZARDOUS MATERIAL ROOM, OR ADJACENT TO SPRAY BOOTH.
8. LOCATION OF FIRE EXTINGUISHERS TO BE AS REQUIRED BY FIRE/BUILDING INSPECTOR.
9. BUILDING STREET NUMBERS SHALL BE EASILY VISIBLE AND LEGIBLE FROM THE STREET. LOCATE THE BUILDING STREET NUMBER PER THE CITY OF RIVERSIDE FIRE DEPARTMENT.
10. THE ENTIRE STRUCTURE SHALL HAVE EMERGENCY LIGHTING THROUGHOUT. EMERGENCY LIGHTING FACILITIES SHALL BE ARRANGED TO PROVIDE INITIAL ILLUMINATION THAT IS AT LEAST AN AVERAGE OF 1 FOOT–CANDLE (11 LUX) AND A MINIMUM AT ANY POINT OF 0.1 FOOT–CANDLE (1 LUX) ALONG THE PATH OF EGRESS AT FLOOR LEVEL. ILLUMINATION LEVELS SHALL BE PERMITTED TO DECLINE TO 0.6 FOOT–CANDLE (6 LUX) AVERAGE AND A MINIMUM AT ANY POINT OF 0.06 FOOT–CANDLE (0.6 LUX) AT THE END OF THE EMERGENCY LIGHTING TIME DURATION. A MAXIMUM–TO–MINIMUM ILLUMINATION UNIFORMITY RATIO OF 40 TO 1 SHALL NOT BE EXCEEDED. EXIT SIGNS AND EMERGENCY LIGHTING SHALL BE CONNECTED TO AN EMERGENCY POWER SOURCE. SEE THE ELECTRICAL PLANS FOR LOCATION OF EXIT SIGNS, EMERGENCY LIGHTING AND THE EMERGENCY POWER SOURCE.
11. TESTING OF EMERGENCY LIGHTING IS REQUIRED, CALL FOR TESTING PRIOR TO FINAL INSPECTION. (TESTING MUST BE BY DISCONNECTING MAIN)
12. EXIT SIGNS WHERE REQUIRED SHALL HAVE A HIGH CONTRAST WITH THE MOUNTING BACKGROUND AND BE WORDED "EXIT" IN LETTERS 6" HIGH WITH A STROKE OF NOT LESS THAN 3/4" AND SHALL CONFORM TO CODES AND/OR SPECIFICATIONS AND REGULATIONS OF THE CITY OF LOS ANGELES FIRE DEPARTMENT.
13. EXIT SIGNS SHALL BE INTERNALLY ILLUMINATED OR EXTERNALLY ILLUMINATED BY TWO ELECTRONIC LAMPS OR SHALL BE AN APPROVED SELF–LUMINOUS TYPE. WHEN THE LUMINOUS OF THE FACE OF THE SIGN IS FROM AN EXTERNAL SOURCE, IT SHALL HAVE AN INTENSITY OF NOT LESS THAN FIVE (5) FOOT–CANDLES FROM EITHER LAMP. INTERNALLY ILLUMINATED SIGNS SHALL PROVIDE EQUIVALENT LUMINANCE AND BE LISTED, LABELED AND INSTALLED IN ACCORDANCE WITH THE MANUFACTURER'S INSTRUCTIONS AND SECTION 2702. MEANS OF EGRESS ILLUMINATION SHALL BE PROVIDED IN ACCORDANCE WITH SECTION 1006, IN ADDITION TO ANY OTHER CODE REQUIREMENTS.
14. POWER TO ONE OF THE TWO LAMPS FOR THE EXIT SIGNS SHALL BE PROVIDED FROM THE STRUCTURES POWER SYSTEM. POWER TO THE OTHER LAMP SHALL BE FROM AN APPROVED EMERGENCY POWER SOURCE.
15. EXIT SIGNS SHALL BE ILLUMINATED AT ALL TIMES. EXIT SIGNS AND EMERGENCY ILLUMINATION CIRCUIT SHALL BE MAINTAINED AND CONTROLLED SEPARATELY FROM THE OTHER CIRCUITS IN THE STRUCTURE. POWER TO THE EXIT ILLUMINATION SHALL BE CONNECTED TO AN EMERGENCY POWER SYSTEM THAT WILL PROVIDE AN ILLUMINATION OF NOT LESS THAN 90 MINUTES IN CASE OF PRIMARY POWER LOSS AND BE INSTALLED IN ACCORDANCE WITH THE ELECTRICAL CODE.
16. ALL EXIT STAIRWAYS SHALL BE ILLUMINATED AT ANY TIME WITH LIGHT HAVING AN INTENSITY OF NOT LESS THAN ONE (1) FOOT–CANDLE MEASURED AT THE FLOOR LEVEL.
17. EGRESS DOORS SHALL BE READILY OPENABLE FROM THE EGRESS SIDE WITHOUT THE USE OF KEY OR SPECIAL KNOWLEDGE OR EFFORT. NO DEADBOLTS, NO SLIDING BOLTS ETC.
18. THE INSPECTION, HYDROSTATIC TEST, AND FLUSHING OF THE FIRE PROTECTION SYSTEMS SHALL BE WITNESSED BY A FIRE DEPARTMENT REPRESENTATIVE AND NO PIPING SHALL BE COVERED OR HIDDEN FROM VIEW UNTIL AN INSPECTION OF SUCH INSTALLATION HAS BEEN COMPLETED.
19. LOCATION OF CLASS I STANDPIPE TO BE PROTECTED BY A DEGREE OF FIRE RESISTANCE EQUAL TO THAT REQUIRED FOR VERTICAL ENCLOSURES OR LOCATED IN ENCLOSED STAIRWAY IN ACCORDANCE WITH CBC 905.4.
20. PROVIDE SMOKE DETECTION FOR ELEVATOR RECALL AT EACH ELEVATION AND ASSOCIATED MACHINE ROOMS CBC 3003.2
21. THE INSPECTION, HYDROSTATIC TEST, AND FLUSHING OF THE FIRE PROTECTION SYSTEMS SHALL BE WITNESSED BY A FIRE DEPARTMENT REPRESENTATIVE AND NO PIPING SHALL BE COVERED OR HIDDEN FROM VIEW UNTIL AN INSPECTION OF SUCH INSTALLATION HAS BEEN COMPLETED.
22. EXIT DOORS SHALL SWING IN THE DIRECTION OF EXIT TRAVEL WHEN SERVING 50 OR MORE PERSONS IN ANY HAZARDOUS AREA OR GROUP H OCCUPANCY.
23. PANIC HARDWARE SHALL BE PROVIDED ON EXIT DOORS HANDLING AN OCCUPANCY CAPACITY OF 50 OR MORE PERSONS, FROM ANY GROUP A, E OR I OCCUPANCY; AND FOR H–1,2,3,6,7,8 OCCUPANCY AND SOUND STAGES. ONLY PANIC HARDWARE APPROVED AND LISTED BY THE STATE FIRE MARSHAL SHALL BE INSTALLED.
24. ALL EXIT DOORS SERVING AN OCCUPANT LOAD OF 10 OR MORE ALONG THE PATH OF EXIT TRAVEL ANYWHERE IN A MEANS OF EGRESS SYSTEM SHALL COMPLY WITH THE REQUIREMENTS OF SECTION 1003.1.
25. EXIT DOORS SHALL BE OF THE PIVOTED, BALANCED OR SIDE–HINGED SWINGING TYPE.
26. THE EXIT PATH SHALL BE IDENTIFIED BY EXIT SIGNS CONFORMING TO THE REQUIREMENTS OF SECTION 1011. EXIT SIGNS SHALL BE READILY VISIBLE FROM ANY DIRECTION OR APPROACH. EXIT SIGNS SHALL BE LOCATED AS NECESSARY TO CLEARLY INDICATE THE DIRECTION OF EGRESS TRAVEL. NO POINT SHALL BE MORE THAN 100 FEET FROM THE NEAREST VISIBLE SIGN.
27. ALL REQUIRED EXITS SHALL BE MAINTAINED UNTIL ARRIVAL AT GRADE OR THE PUBLIC WAY.
28. THE MEANS OF EGRESS, INCLUDING THE EXIT DISCHARGE, SHALL BE ILLUMINATED AT ALL TIMES THE BUILDING SPACE SERVED BY THE MEANS OF EGRESS IS OCCUPIED.
29. THE EMERGENCY POWER SYSTEM SHALL PROVIDE POWER FOR A DURATION OF NOT LESS THAN 90 MINUTES AND SHALL CONSIST OF STORAGE BATTERIES, UNIT EQUIPMENT OR AN ON–SITE GENERATOR. THE INSTALLATION OF THE EMERGENCY POWER SYSTEM SHALL BE IN ACCORDANCE WITH SECTION 2702.
30. THE POWER SUPPLY FOR MEANS OF EGRESS ILLUMINATION SHALL NORMALLY BE PROVIDED BY THE PREMISES' ELECTRICAL SUPPLY. IN THE EVENT OF POWER SUPPLY FAILURE, AN EMERGENCY ELECTRICAL SYSTEM SHALL AUTOMATICALLY ILLUMINATE THE FOLLOWING AREAS:
    A. AISLES AND ENCLOSED EGRESS STAIRWAYS IN ROOMS AND SPACES THAT REQUIRE TWO OR MORE MEANS OF EGRESS.
    B. CORRIDORS, EXIT ENCLOSURES AND EXIT PASSAGEWAYS IN BUILDINGS REQUIRED TO HAVE TWO OR MORE EXITS.
    C. EXTERIOR EGRESS COMPONENTS AT OTHER THAN THE LEVEL OF EXIT DISCHARGE UNTIL EXIT DISCHARGE IS ACCOMPLISHED FOR BUILDINGS REQUIRED TO HAVE TWO OR MORE EXITS.
    D. INTERIOR EXIT DISCHARGE ELEMENTS, AS PERMITTED IN SECTION 1024.1, IN BUILDINGS REQUIRED TO HAVE TWO OR MORE EXITS.
    E. EXTERIOR LANDINGS, AS REQUIRED BY SECTION 1008.1.5, FOR EXIT DISCHARGE DOORWAYS IN BUILDINGS REQUIRED TO HAVE TWO OR MORE EXITS.

SEPARATE PERMITS

The following items shall be provided to the project as "separate permits".

DEMOLITION

FIRE PROTECTION SYSTEMS, INCLUDING COMMUNICATION DEVICES

GRADING WORK

STEEL STAIRS

BARRIER CABLES

PARKING ACCESS and REVENUE CONTROL EQUIPMENT

SPECIFIC NOTES

1. CODE REQUIREMENTS: This Parking Structure project shall comply with The California Building Code, 2010 Edition, as amended by the City of Riverside, The 2010 California Plumbing Code, THE 2010 California Mechanical Code, the 2010 California Electrical Code, the 2010 California Fire Code, The 2010 California Green Building Standards Code, The AMERICANS WITH DISABILITIES ACCESSIBILITY GUIDELINES FOR BUILDINGS AND FACILITIES 2004 (ADAAG), and the ordinances, requirements, and building codes of the CITY OF RIVERSIDE, the COUNTY OF RIVERSIDE and the STATE OF CALIFORNIA
2. A GRADING PERMIT for this project will be required.
3. A CONDITIONAL USE PERMIT for this project will not be required.
4. There will not be any storage or use of hazardous materials within the project which exceed the quantities listed in Table 414.2.5(1) of the California Building Code.
5. BUILDING CODE DATA LEGEND

OCCUPANCY GROUPS	S–2 PARKING STRUCTURE A–2 ASSEMBLY USES INTENDED FOR FOOD AND/OR DRINK CONSUMPTION S–1 MODERATE HAZARD STORAGE FOR THEATRE SETS ETC.
USE	PARKING OF PRIVATE VEHICLES (THERE SHALL NOT BE PARKING FOR BUSES, TRUCKS AND SIMILAR VEHICLES, VEHICLE REPAIR WORK OR DISPENSING OF FUEL) ASSEMBLY USES (RESTAURANTS) MODERATE HAZARD STORAGE USES
TYPE OF CONSTRUCTION	TYPE IIB
SPRINKLERS	YES
STORIES	3 STORIES AND AN OCCUPIED ROOF
HEIGHT	45'–2" TOP OF SPANDREL 45'–10" TOP FACADE AT HIGHEST POINT 56'–0" TOP OF ELEVATOR HOISTWAY
FLOOR AREA	See Project Data and Area Tabulations

6. Type IIB construction shall be provided throughout the structure. Fire–resistive assemblies shall be based on IBC approved systems per Chapter 7 of the California Building Code. [SEE FIRE RESISTIVE REQUIREMENTS NOTES ON THIS SHEET]
7. The following organizations and professionals provided services for this project:

OWNER:	**CITY OF RIVERSIDE** Robert Wise 3900 Main Street, Suite 200 Riverside, California 92522
DESIGN/BUILD CONTRACTOR:	**BAYLEY CONSTRUCTION** John J. Spath 3730 S. Susan Street, Suite 200 Santa Ana, California 92704 714.540.8863 714.556.8863 fax
PARKING CONSULTANT/ARCHITECT:	**PACIFIC PARKING DESIGN** Scott B. Herman, AIA 6 Venture, Suite 275 Irvine, California 92618 949.341.0066 949.341.0099 fax
EXHIBIT HALL/BLACK BOX ARCHITECT:	**DLR GROUP / WWCOT** Mark Schoeman 4280 Latham Street, Suite H Riverside, California 92501 951.682.0470 951.300.0249 fax
STRUCTURAL ENGINEER:	**PACIFIC PARKING DESIGN** Dennis K. Bashaw, S.E. 6 Venture, Suite 275 Irvine, California 92618 949.341.0066 949.341.0099 fax
MECHANICAL/PLUMBING/ ELECTRICAL ENGINEER:	**GLUMAC** Jonathan Mitsumori 18200 Von Karman Avenue, Suite 100 Irvine, California 92612 949.833.8190 949.833.0252 fax
CIVIL ENGINEER:	**RICK ENGINEERING COMPANY** Marten L. Anderson, RCE 1770 Iorna Street, Suite 100 Riverside, California 92507 951.782.0707 951.782.0723 fax

PROJECT DATA

PROJECT DESCRIPTION

THE FOX ENTERTAINMENT PLAZA consists of a freestanding two–story EXHIBIT HALL / BLACK BOX building and a freestanding four–level OPEN PARKING GARAGE (with ground level storage and restaurant space). The entire project is considered as portions of one building per CBC Sec. 503.1.2 and as such the type of construction for the aggregate building and the area and height allowances are determined under that methodology. [see sheet B–G003 for the allowable building height and area tabulation and the aggregate area totals and building height tabulations for the buildings] the project shall be designed as separated occupancies per CBC Sec. 508.4 and occupancies will be separated per CBC Sec. 508.4.4.

The two freestanding buildings will be permitted separately even though they are considered as portions of one building. See sheets PA–0.0 and PA–0.1 for code specific occupant and exiting information regarding the parking structure building and sheet B–G003 for code specific occupant and exiting information regarding the exhibit hall / black box building.

The PARKING GARAGE PERMIT PACKAGE consists a the free standing three–story building with an occupied roof (four parking levels) 395 car open parking garage with ground level moderate hazard storage and "shell only" restaurant space.

PROJECT ADDRESS

3601 MARKET STREET, RIVERSIDE, CALIFORNIA

OCCUPANCY GROUPS

Occupancy group per the California Building Code are:

"S–2" open parking as defined in Section 311.3 & 406.3.

"S–1" moderate hazard storage as defined in Section 311.2.

"A–2" assembly uses intended for food and/or drink consumption as defined in Section 303.1.

TYPE of CONSTRUCTION

Type of construction for the project is TYPE IIB and the project is designed to comply with the provisions of CBC Section 508.4 separated Occupancies.

AREA of PARKING GARAGE BUILDING

The total parking area of the structure is approximately 143,742.00 square feet.
The total area of the parking garage building is approximately 158,387.00 square feet.

Level P–4	=	40,328.00 square feet
Level P–3	=	40,121.00 square feet
Level P–2	=	40,121.00 square feet
Level P–1 (PARKING)	=	23,172.00 square feet
Level P–1 (ASSEMBLY)	=	11,987.00 square feet
Level P–1 (STORAGE)	=	2,658.00 square feet

DESIGN LOADS

50 PSF reducible LIVE LOAD parking areas.

100 PSF non–reducible LIVE LOAD in stairs, bridges and elevated pedestrian walkways.

STRUCTURAL SYSTEM

The Structural system is to consist of a concrete frame.

Floor framing shall be a cast–in–place post tensioned beams and/or girders with cast–in–place post–tensioned concrete slabs.

Vertical loads shall be carried by concrete columns. Seismic loads shall be resisted by cast–in–place concrete moment frames.

FOUNDATION SYSTEM

The structure will be generally supported on spread or continuous footings

EXITING REQUIREMENTS

SEE SHEET PA–0.1 FOR EXITING REQUIREMENTS

FIRE PROTECTION SYSTEMS

SPRINKLER REQUIREMENTS:	The parking structure shall be provided with a complete supervised automatic fire sprinkler system throughout, installed in accordance with the recommendations of N.F.P.A. 13 and the requirements of the City of Riverside Fire Department.
STANDPIPE REQUIREMENTS:	CLASS I Standpipes [not Class III standpipes] shall be provided where the floor level of the highest story is more than 30 feet in height above the lowest level of fire department access and the entire structure is sprinklered (CBC Sec. 905.3.1 exception 1) and/or is an Open Parking Structure that the highest floor is less than 150' above the lowest level of fire department access. (CBC Sec. 905.3.1 exception 2) Class I standpipes shall be provided at each required stair. Standpipes shall be interconnected at the bottom.
AUDIBLE AND VISUAL SIGNALING DEVICES:	Supervision of the sprinkler system under CBC Sec. 907.13 and alarms under CBC Sec. 907.14 shall be provided when the sprinkler system has more than 100 sprinkler heads. A manual fire alarm system shall be provided throughout the building (CBC 907.2.1)
FIRE EXTINGUISHER REQUIREMENTS:	Permanent type 4A:80B:C fire extinguishers in cabinets shall be provided at all levels and shall be located at stairs and other logical locations for ease of finding. They shall be located within 75 feet travel distance for each 6,000 square feet or portion thereof on each floor. Extinguishers shall be mounted at 5'–0" maximum above finish floor. [as measured to the top of fire extinguisher] Extinguishers shall be mounted no less than 4" from the finish floor. [as measured to the bottom of fire extinguisher]

VENTILATION SYSTEMS

MECHANICAL VENTILATION:	All parking levels will not require mechanical ventilation as they meet the openness requirements of the CBC Sec. 406.3.3.1 natural ventilation for parking structures.

BAYLEY CONSTRUCTION

Bayley Construction
3730 S. Susan St.
Suite 200
Santa Ana, CA, 92704
CA. License 734880
Tel 714-540-8863
Fax 714-556-8863

Bayley Construction
8005 S.E. 28th St.
P.O. Box 9004
Mercer Island, WA, 98040
WA. License BAYLECO34JC
Tel 206-621-8884
Fax 206-343-7728

Pacific Parking DESIGN

6 Venture, Suite 275 949.341.0066 t
Irvine, California 92618 949.341.0099 f

DLR Group WWCOT
Architecture Engineering Planning Interiors

4280 Latham Street, Suite H 951.682.0470 t
Riverside, California 92501 951.682.1801 f

LICENSED ARCHITECT SCOTT BRAYTON NEWLAND C–22700 EXP. 9–30–13 STATE OF CALIFORNIA

Public Agency Submittal: .
Issued for Bidding: .
Issued for Construction: .

Revisions:

A 09.15.2011 PERMIT SET

PHASE II:
FOX
ENTERTAINMENT
PLAZA:
PARKING GARAGE

3601 Market Street,
Riverside, CA 92501

CITY of RIVERSIDE

CITY OF RIVERSIDE

3900 Main Street, Riverside, CA 92522

Phase: .
Revised .
PPD Project № 10-101

CODE SHEET

Issued Date: 05.02.2011
Drawn By: RTR
Checked By: SBH

PA-0.0

Sheet №

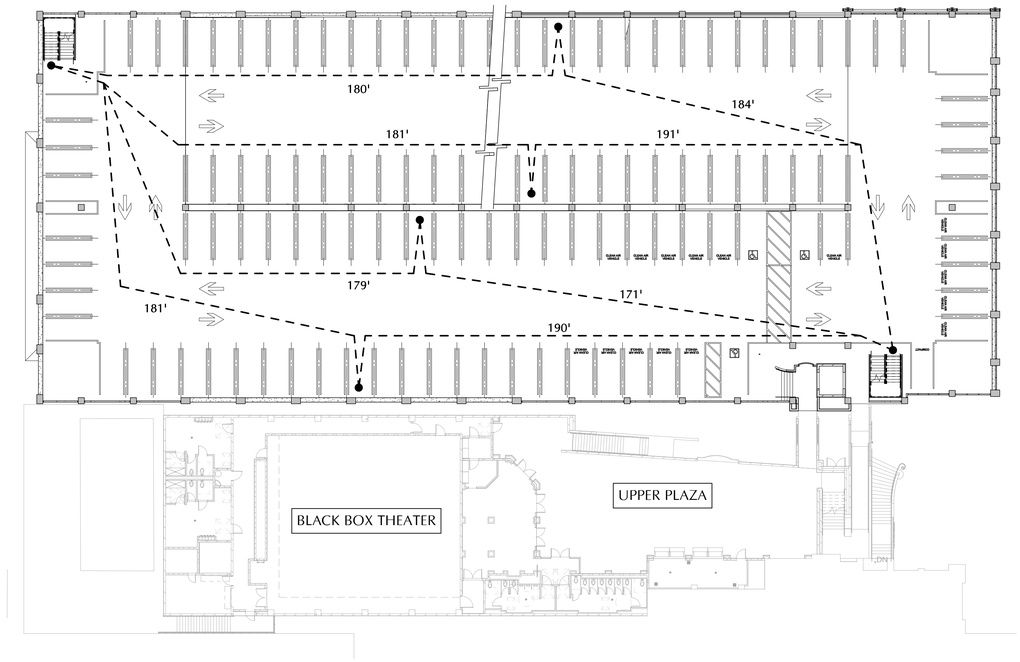

2 PA-0.1 LEVEL P-2 EXITING PLAN

1" = 20'-0"

EXIT at LEVEL P-1
(STAIR #2)

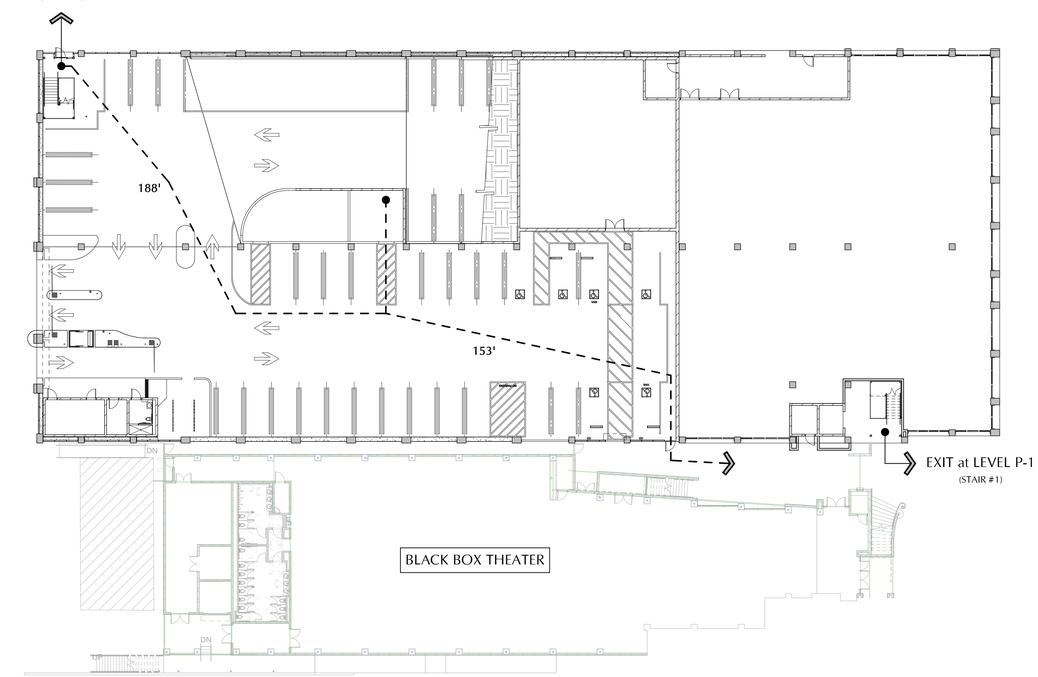

1 PA-0.1 LEVEL P-1 EXITING PLAN

1" = 20'-0"

ALLOWABLE AREA & HEIGHT - TYPE IIB CONSTRUCTION

(CBC TABLE 503)

See sheet B-G003 for aggregate areas of entire building and calculations to determine frontage increase

OCCUPANCY CLASSIFICATION	BASE ALLOWABLE AREA	AUTOMATIC SPRINKLER INCREASE (CBC 506.3)	FRONTAGE INCREASE (CBC 506.2) (.448)	TOTAL ALLOWABLE AREA (per level)	ALLOWABLE HEIGHT (stories) (feet)
S-2	26,000	52,000	11,648	89,648	3+1 55'+20' = 75'
S-1	17,500	35,000	7,840	60,340	2+1 55'+20' = 75'
A-2	9,500	19,000	4,256	32,756	2+1 55'+20' = 75'

REQUIRED NUMBER OF EXITS

FLOOR	FLOOR AREA	OCCUPANT LOAD	REQUIRED NUMBER OF EXITS
LEVEL P-4	40,328.00 SF	202 OCCUPANTS 200 S.F./OCCUPANT	2 EXITS per 1021.1.2 (2 MIN., BUT LESS THAN 500 FOR 3)
LEVEL P-3	40,121.00 SF	201 OCCUPANTS 200 S.F./OCCUPANT	2 EXITS per 1021.1.2 (2 MIN., BUT LESS THAN 500 FOR 3)
LEVEL P-2	40,121.00 SF	201 OCCUPANTS 200 S.F./OCCUPANT	2 EXITS per 1021.1.2 (2 MIN., BUT LESS THAN 500 FOR 3)
LEVEL P-1 PARKING	23,172.00 SF	116 OCCUPANTS 200 S.F./OCCUPANT	2 EXITS per 1021.1.2 (2 MIN., BUT LESS THAN 500 FOR 3)
TOTAL PARKING AREA	143,742.00 SF	2 EXITS PROVIDED	
LEVEL P-1 RESTAURANT AREA	11,987.00 SF	800 MAX. OCCUPANTS 15 S.F./OCCUPANT (based on gross area does not factor in kitchen, storage or service areas)	3 EXITS REQUIRED (MORE THAN 500) EXITS TO BE PROVIDED IN TENANT IMPROVEMENT PERMITS 13'-4" EXIT WIDTH REQUIRED
LEVEL P-1 STORAGE AREA	2,658.00 SF	9 OCCUPANTS 300 S.F./OCCUPANT	SEE BELOW [1]
TOTAL STRUCTURE AREA	158,387.00 SF		

1. For the storage area the space is small enough that the provisions of CBC Section 1019.2 can be utilized and one exit from the space will be required where the occupant load from that space is less than 49. Travel distances inside the space shall be limited to 100 feet. (sprinkler increase)

   The storage space will be able to exit through the adjoining S-2 parking area without a corridor as the S-2 area is of a lesser hazard group to the S-1 per CBC Section 1014.2. The exit way shall provide a discernable path of egress travel to the exit and shall be at least 44" in width.

REQUIRED EXIT WIDTHS (CBC 1005)

MINIMUM STAIR WIDTH = 44" (CBC 1009.1) PARKING LEVELS ONLY

OCCUPANT LOAD:	200 square feet per occupant
AREA PER LEVEL P-4:	40,328.00 gross square feet (TYPICAL LEVEL)
OCCUPANTS PER TYPICAL LEVEL:	$\frac{40,328.00}{200}$ = 201.64 (202)
NUMBER OF EXITS REQUIRED:	TWO exits required per CBC Sec. 1021.1.2 [2 min., but less than 500 occupants so only 2 required]
NUMBER OF EXITS PROVIDED:	TWO exits provided
DISTANCE TO EXITS:	Maximum distance to an exit not to exceed 400' (sprinkler increase) measured to an open stair.
EXIT REQUIREMENTS:	Width = 202 X 0.3 = 60.60 inches Minimum width = $\frac{60.60 \text{ inches}}{2}$ = 30.30" (2'-7")
REQUIRED EXIT WIDTHS:	2'-7" is LESS than the minimum required width of 3'-8" for stairs. Therefore 3'-8" is the required minimum width. (Width of stairs provided, 4'-9" & 4'-9")
WIDTH OF EXITS PROVIDED:	9'-6" actual width provided - is GREATER than the required total width of 7'-4", therefore o.k.

MINIMUM DOOR CLEAR EXIT WAY WIDTH = 32" (CBC 1008.1.1)

WIDTH OF EXITS AT P-1:	P-1 Occupants = 162 + 101 from Stair #2 (Stair #1 does exit through P-1). Required width = 182 X 0.2 = 36.4" 36.4" / 2 = 18.2" for each exit. 5'-4" (two 36" gates [32" clear]) actual width provided - is GREATER than the required total width of 36.4", therefore o.k.

MINIMUM CORRIDOR WIDTH = 44" (CBC SECTION 1017.2)

NO CORRIDORS PROVIDED OR REQUIRED

MAXIMUM ALLOWABLE TRAVEL DISTANCE TO EXIT

(SEE PLANS THIS SHEET FOR EXITING DIAGRAMS)

S-2 OCCUPANCY	
BASE ALLOWABLE	300' ALLOWED PER CBC TABLE 1016.1
INCREASE FOR SPRINKLERS	400' ALLOWED PER CBC TABLE 1016.1
S-1 OCCUPANCY	
BASE ALLOWABLE	200' ALLOWED PER CBC TABLE 1016.1
INCREASE FOR SPRINKLERS	250' ALLOWED PER CBC TABLE 1016.1
A-2 OCCUPANCY	
BASE ALLOWABLE	200' ALLOWED PER CBC TABLE 1016.1
INCREASE FOR SPRINKLERS	250' ALLOWED PER CBC TABLE 1016.1

Bayley Construction
3730 S. Susan St.
Suite 200
Santa Ana, CA. 92704
CA. License 734880
Tel 714-540-8863
Fax 714-556-8863

Bayley Construction
8005 S.E. 28th St.
P.O. Box 9004
Mercer Island, WA. 98040
WA. License BAYLEC0343C
Tel 206-621-8884
Fax 206-343-7728

BAYLEY CONSTRUCTION

Pacific Parking DESIGN

6 Venture, Suite 275 949.341.0066 t
Irvine, California 92618 949.341.0099 f

DLR Group WWCOT
Architecture Engineering Planning Interiors

4280 Latham Street, Suite H 951.682.0470 t
Riverside, California 92501 951.682.1801 f

LICENSED ARCHITECT SCOTT BRAYTON BERMAN C-22700 EXP. 9-30-13 STATE OF CALIFORNIA

Public Agency Submittal:
Issued for Bidding:
Issued for Construction:

Revisions:

A 09.15.2011 PERMIT SET

PHASE II: FOX ENTERTAINMENT PLAZA: PARKING GARAGE

3601 Market Street
Riverside, CA 92501

CITY of RIVERSIDE

CITY OF RIVERSIDE

3900 Main Street, Riverside, CA 92522

Phase:
Revised 04.19.2011
PPD Project № 10-101

EXITING PLANS

Issued Date: 05.02.2011
Drawn By: RTR
Checked By: SBH

PA-0.1

Sheet №

File Path & Name: C:\Dimension Z\PPD Projects\2009 - Fox Plaza Parking Structure (Bayley)\Fox PPD Revit\PPD Fox Theater Parking Garage_Owner.rvt
© WWCOT 2009 -- Plotted 9/13/2011 10:22:25 AM

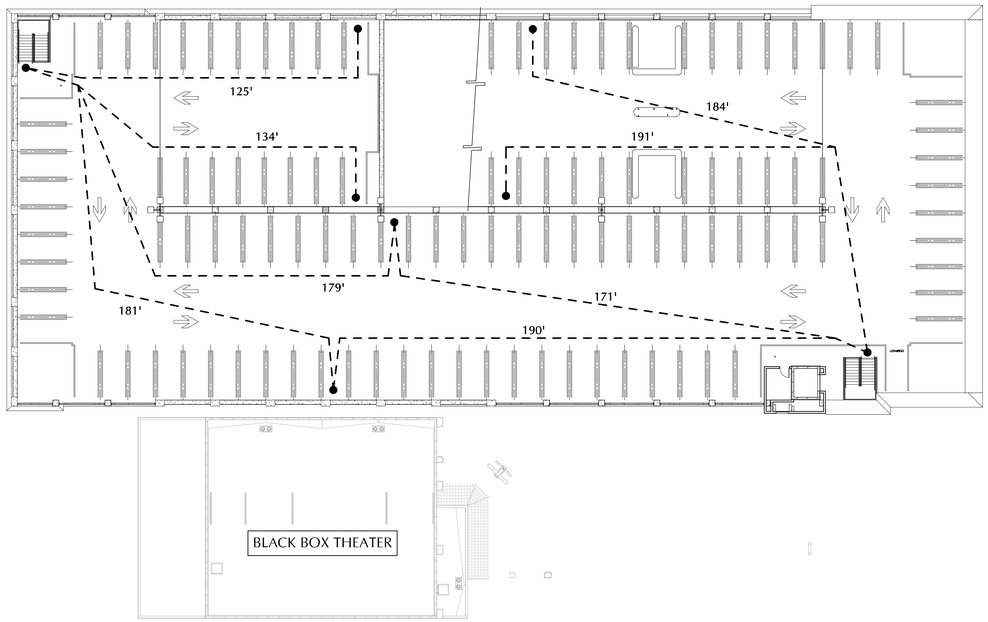

2 PA-0.2 LEVEL P-4 EXITING PLAN

1" = 20'-0"

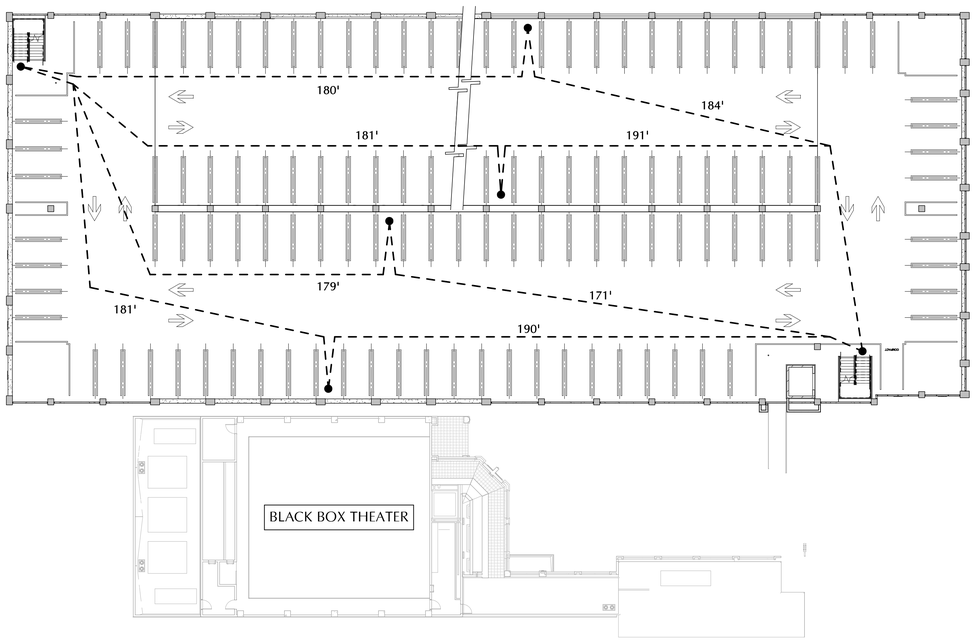

1 PA-0.2 LEVEL P-3 EXITING PLAN

1" = 20'-0"

Bayley Construction
3730 S. Susan St.
Suite 200
Santa Ana, CA. 92704
CA. License 734880
Tel 714-540-8863
Fax 714-556-8863

Bayley Construction
8005 S.E. 28th St.
P.O. Box 9004
Mercer Island, WA. 98040
WA. License BAYLECO343C
Tel 206-621-8884
Fax 206-343-7728

BAYLEY CONSTRUCTION

Pacific Parking DESIGN

6 Venture, Suite 275 949.341.0066 t
Irvine, California 92618 949.341.0099 f

DLR Group WWCOT
Architecture Engineering Planning Interiors

4280 Latham Street, Suite H 951.682.0470 t
Riverside, California 92501 951.682.1801 f

LICENSED ARCHITECT
SCOTT BRAYTON HERMAN
C-22700
EXP. 9-30-13
STATE OF CALIFORNIA

Public Agency Submittal:
Issued for Bidding:
Issued for Construction:

Revisions:

A 09.15.2011 PERMIT SET

PHASE II: FOX ENTERTAINMENT PLAZA: PARKING GARAGE

3601 Market Street
Riverside, CA 92501

CITY of RIVERSIDE

CITY OF RIVERSIDE

3900 Main Street, Riverside, CA 92522

Phase:
Revised 04.19.2011
PPD Project № 10-101

EXITING PLANS

Issued Date: 05.02.2011
Drawn By: RTR
Checked By: SBH

PA-0.2

Sheet №

File Path & Name: C:\Dimension ZUPPD Projects\2009 - Fox Plaza Parking Structure (Bayley)\Fox PPD Revit\PPD Fox Theater Parking Garage_Owner.rvt
© WWCOT 2009 – Plotted 9/13/2011 9:36:22 AM

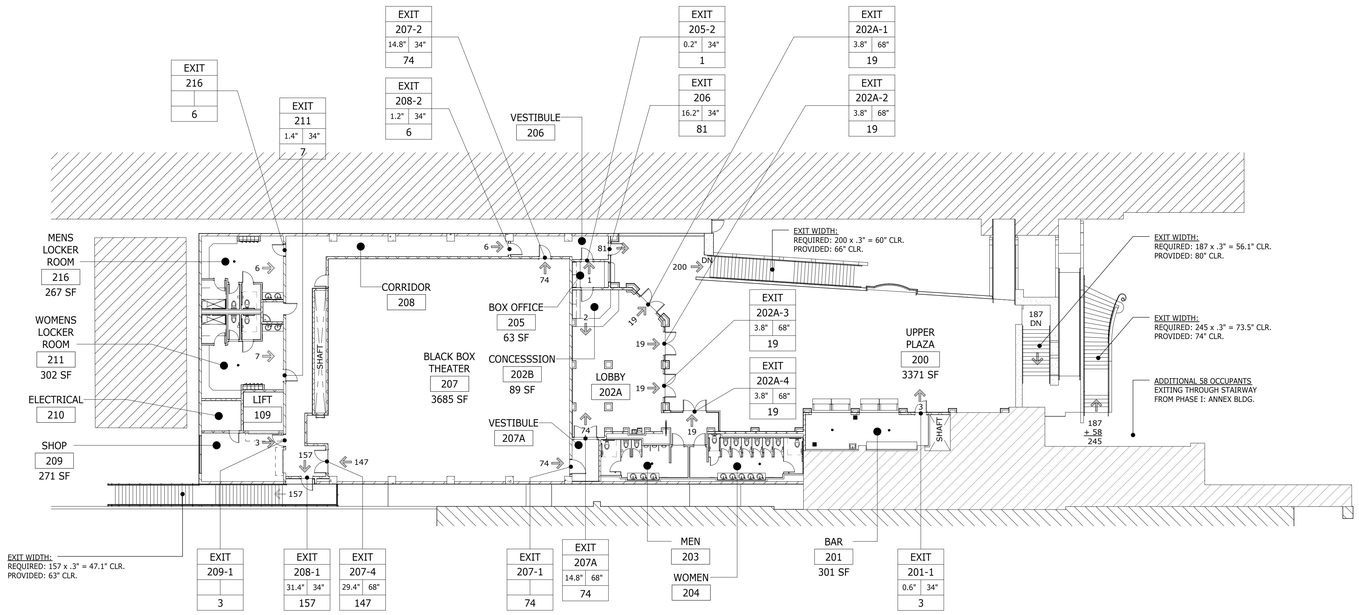

SECOND FLOOR EGRESS PLAN (865.47')

Scale 1/16" = 1'-0" 7

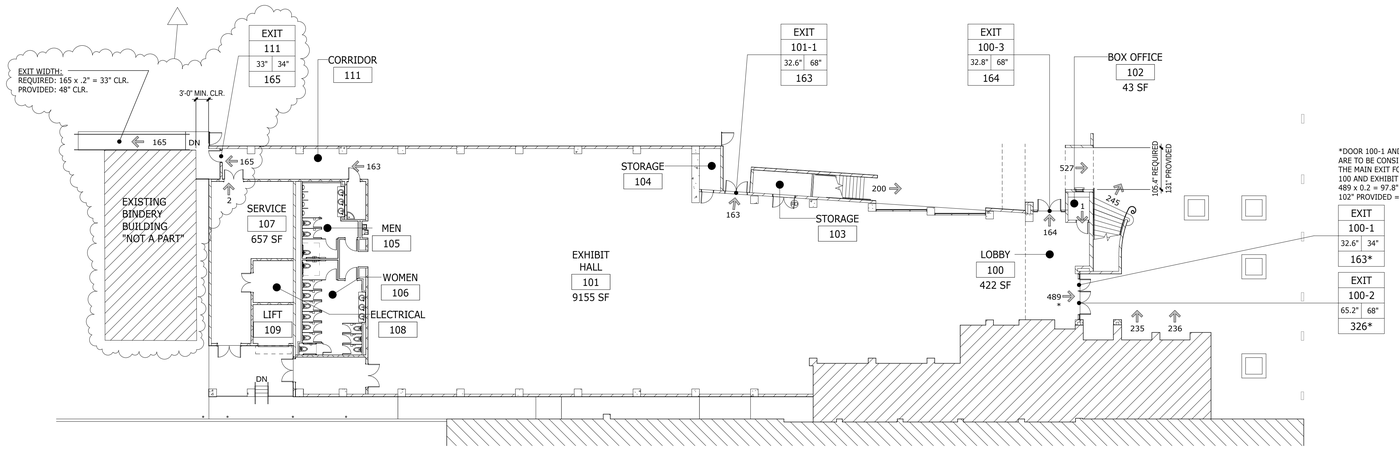

FIRST FLOOR EGRESS PLAN (845.05')

Scale 1/16" = 1'-0" 5

File Path & Name: C:\Dimension Z\PPD\Projects\2009 - Fox Plaza Parking Structure (Bayley)\DLR\110907 progress phase II.rvt
© WWCOT 2009 -- Plotted 9/13/2011 11:59:56 AM

OCCUPANT LOAD & EXITING

RM. NO.	ROOM NAME	ANCILLARY	AREA (S.F.)	OCCUPANCY TYPE	TABLE 1004.1.1 FLOOR AREA ALLOWANCE PER OCCUPANT: FUNCTION OF SPACE	LOAD FACTOR (S.F. PER OCC.)	OCUPANT LOAD	TABLE 1021.1 NO. OF REQUIRED EXITS: REQUIRED	PROVIDED	NOTES
(845.05') F.F.										
100	LOBBY	No	422	A3	ASSEMBLY W/OUT FIXED SEATS	10	42	2	3	1
101	EXHIBIT HALL	No	9155	A3	ASSEMBLY W/OUT FIXED SEATS	10	916	3	5	1
102	BOX OFFICE	No	43	A3	BUSINESS	100	0	1	1	
103	STORAGE	No	91	S2	STORAGE	300	0	0	1	
104	STORAGE	No	60	S2	STORAGE	300	0	0	1	
105	MEN	Yes	220	A3	-	0		0	1	
106	WOMEN	Yes	359	A3	-	0		0	1	
107	SERVICE	No	657	S2	ACCESSORY OCCUPANCY	300	2	1	1	
108	ELECTRICAL	No	113	S2	ACCESSORY OCCUPANCY	300	0	0	1	
109	LIFT	Yes	105	S2	-	0		0	1	
110	JANITOR	No	48	S2	ACCESSORY OCCUPANCY	300	0	0	1	
111	CORRIDOR	Yes	251	A3	EXIT ACCESS	0		0	1	
112	VESTIBULE		171							
SECOND FLOOR F.F. (866.07')										
200	UPPER PLAZA	No	3371	A1	ASSEMBLY, UNCONCENTRATED	15	225	2	2	
201	BAR	No	301	B	BUSINESS	100	3	1	1	
202A	LOBBY	Yes	838	A1	-	0		0	4	
202B	CONCESSSION	No	89	A1	BUSINESS	100	1	1	1	
203	MEN	Yes	203	A1	-	0		0	1	
204	WOMEN	Yes	297	A1	-	0		0	1	
205	BOX OFFICE	No	63	A1	BUSINESS	100	1	1	1	
206	VESTIBULE	Yes	140	A1	EXIT ACCESS	0		0	1	
207	BLACK BOX THEATER	No	3685	A1	ASSEMBLY W/ FIXED SEATS	15	246	2	3	2
207A	VESTIBULE	Yes	75	A1	EXIT ACCESS	0		0	1	
208	CORRIDOR	Yes	738	A1	EXIT ACCESS	0		0	2	
209	SHOP	No	271	S2	STORAGE	300	1	1	1	
210	ELECTRICAL	No	81	S2	ACCESSORY OCCUPANCY	300	0	0	1	
211	WOMENS LOCKER ROOM	No	302	A1	LOCKER ROOM	50	6	1	1	
212	TOILET	Yes	32	A1	-	0		0	1	
213	TOILET	Yes	19	A1	-	0		0	1	
214	SHOWER	Yes	48	A1	-	0		0	1	
215	JANITOR	No	27	S2	ACCESSORY OCCUPANCY	300	0	0	1	
216	MENS LOCKER ROOM	No	267	A1	LOCKER ROOM	50	5	1	1	
217	TOILET	Yes	33	A1	-	0		0	1	
218	TOILET	Yes	20	A1	-	0		0	1	
219	SHOWER	Yes	48	A1	-	0		0	1	
GALLERY LEVEL FLOOR PLAN/ LOWER ROOF PLAN										
301	CAT WALK	Yes	935	A1	ACCESSORY OCCUPANCY	0		0	1	
302	CONTROL BOOTH	Yes	232	A1	ACCESSORY OCCUPANCY	0		0	1	
303	VESTIBULE	Yes	138	A1	ACCESSORY OCCUPANCY	0		0	1	
304	ELECTRICAL	Yes	142	S2	ACCESSORY OCCUPANCY	300	0	0	1	
Grand total			24094				1450			

*** 1,522 TOTAL OCCUPANT LOAD (1472 + 51 = 1,522), ADJUSTED PER NOTE 2 BELOW**

NOTES:

1. LOAD FACTOR REDUCTION PER BLDG OFFICIAL.
2. 246 MAXIMUM MOVABLE SEATS WITH STAGE AT 49 OCC.
   TOTAL PROPOSED OCCUPANT LOAD TO BE 295.

ACCESSORY OCCUPANCY AREA LIMITATIONS:

FIRST FLOOR: AREA CALCULATION
49,573 SF x 10% = 4,957 SF ALLOW > 197 SF : OK

SECOND FLOOR: AREA CALCULATION
52,528 SF x 10% = 5,253 SF ALLOW > 1,844 SF : OK

BUILDING HEIGHT & AREA

TYPE OF CONSTRUCTION : TYPE II - B - SPRINKLERED

GROUP	ALLOWABLE BUILDING HEIGHTS & AREAS (TABLE 503): AREA (PER FLOOR)	HEIGHT	STORIES	AUTOMATIC SPRINKLER SYSTEM INCREASE (SECTIONS 504.2 , 506.1, 506.2, 506.3): AREA INCREASE (PER FLOOR)	HEIGHT (ALLOW + 20')	STORIES (ALLOW +1)
A1	8500 SF	55' - 0"	2	29673 SF	75' - 0"	3
A2	9500 SF	55' - 0"	2	33164 SF	75' - 0"	3
A3	9500 SF	55' - 0"	2	33164 SF	75' - 0"	3
B	23000 SF	55' - 0"	3	80293 SF	75' - 0"	4
S1	17500 SF	55' - 0"	2	61092 SF	75' - 0"	3
S2	26000 SF	55' - 0"	3	90766 SF	75' - 0"	4

AGGREGATE AREA TOTALS & BUILDING HEIGHTS

EXHIBIT HALL / BLACK BOX THEATRE

FIRST FLOOR

GROUP A3	ASSEMBLY	10,663 SF
GROUP S2	STORAGE	1,093 SF
TOTAL		11,756 SF

(ROOM 102, 103, 104 AND 110 ARE ACCESSORY. SEE ACCESSORY AREA LIMITATIONS ABOVE)

SECOND FLOOR

GROUP A1	ASSEMBLY	10,262 SF
GROUP B	BUSINESS	301 SF
GROUP S2	STORAGE	390 SF
GALLERY LEVEL	ACCESSORY	1,454 SF
TOTAL		12,407 SF

(S2 AND GALLERY LEVEL ARE ACCESSORY. SEE ACCESSORY AREA LIMITATIONS ABOVE)

BUILDING HEIGHT: 51'-0"

PARKING GARAGE

LEVEL P1

GROUP A2	KIT./RESTAURANT	11,987 SF
GROUP S1	STORAGE	2,658 SF
GROUP S2	PARKING	23,172 SF
TOTAL		37,817 SF

LEVEL P2

GROUP S2	PARKING	40,121 SF

LEVEL P3

GROUP S2	PARKING	40,121 SF

LEVEL P4

GROUP S2	PARKING	36,872 SF

BUILDING HEIGHT:
45'-10" (56'-0" @ HOIST WAY)

AGGREGATE AREA TOTAL

FIRST FLOOR : LEVEL P1
GROUP A2 = 11,987 SF
GROUP A3 = 10,860 SF
GROUP S1 = 2,658 SF
GROUP S2 = 24,068 SF
TOTAL 49,573 SF

SECOND FLOOR : LEVEL P2
GROUP A1 = 12,106 SF
GROUP B = 301 SF
GROUP S2 = 40,121 SF
TOTAL 52,528 SF

LEVEL P3
GROUP S2 = 40,121 SF

LEVEL P4
GROUP S2 = 36,872 SF

BUILDING AREA MODIFICATIONS

FRONTAGE INCREASE (If)
SECTION 506.1

BLACK BOX/EXHIBIT HALL AND PARKING GARAGE ARE TO BE CONSIDERED ONE BUILDING
F = 54.5+31.5+126.5+314+128+14+20.5+69 = 758'
P = 758+241+7+17= 1023'
W = 30

If = [F/P - 0.25] W/30
If = [758/1023 - 0.25] 30/30
If = .491

AREA INCREASE (Is=2),
AUTOMATIC SPRINKLER SYSTEM
SECTION 506.2

Aa = {At + [At x If] + [At x Is]}

GROUP : A1
Aa = {8,500 + [8,500 x .491] + [8,500 x 2]}
Aa = 29,673 SF

GROUP : A2
Aa = {9,500 + [9,500 x .491] + [9,500 x 2]}
Aa = 33,164 SF

GROUP : A3
Aa = {9,500 + [9,500 x .491] + [9,500 x 2]}
Aa = 33,164 SF

GROUP : B
Aa = {23,000 + [23,000 x .491] + [23,000 x 2]}
Aa = 80,293 SF

GROUP : S1
Aa = {17,500 + [17,500 x .491] + [17,500 x 2]}
Aa = 61,092 SF

GROUP : S2
Aa = {26,000 + [26,000 x .491] + [26,000 x 2]}
Aa = 90,766 SF

ALLOWABLE BUILDING AREA
SECTION 508.4.2

RATIO Aa = ACTUAL BUILDING AREA OF EACH SEPARATED OCCUPANCY DIVIDED BY THE ALLOWABLE BUILDING AREA OF EACH SEPARATED OCCUPANCY = THE RATIO PER EACH STORY

SUM Aa = SUM OF THE RATIOS SHALL NOT EXCEED 1

FIRST FLOOR : LEVEL P1
RATIO Aa OF GROUP A2 = 11,987 / 33,164 = 0.361
RATIO Aa OF GROUP A3 = 10,860 / 33,164 = 0.327
RATIO Aa OF GROUP S1 = 2,658 / 61,092 = 0.044
RATIO Aa OF GROUP S2 = 24,068 / 90,766 = 0.265

SUM OF RATIOS Aa = 0.361 + 0.327 + 0.044 + 0.265 = 0.997 < 1 : OK

SECOND FLOOR : LEVEL P2
RATIO Aa OF GROUP A1 = 12,106 / 29,673 = 0.408
RATIO Aa OF GROUP B = 301 / 80,293 = 0.004
RATIO Aa OF GROUP S2 = 40,121 / 90,766 = 0.442

SUM OF RATIOS Aa = 0.408 + 0.004 + 0.442 = 0.854 < 1 : OK

LEVEL P3
RATIO Aa OF GROUP S2 = 40,121 / 90,766 = 0.442 < 1 : OK

LEVEL P4
RATIO Aa OF GROUP S2 = 40,121 / 90,766 = 0.442 < 1 : OK

If = AREA INCREASE DUE TO FRONTAGE
F = BUILDING PERIMETER THAT FRONTS ON A PUBLIC WAY OR OPEN SPACE HAVING 30 FEET
P = PERIMETER O ENTIRE BUILDING
W = WIDTH OF PUBLIC WAY OR OPEN SPACE (30 FT. MAX)

Aa = ALLOWABLE BUILDING AREA PER STORY
At = TABULAR BUILDING AREA PER STORY IN ACCORDANCE WITH TABLE 503
Is = AREA INCREASE FACTOR DUE TO AUTOMATIC SPRINKLER PROTECTION AS CALCULATED IN ACCORDANCE WITH SECTION 506.3

MIXED USE OCCUPANCY SEPARATIONS

BUILDINGS EQUIPPED WITH AUTOMATIC SPRINKLER SYSTEM:

OCCUPANCY A & B
1 HR. SEPARATION REQ.

INCIDENTAL ACCESSORY OCCUPANCY SEPARATIONS
STORAGE ROOMS OVER 100 SF. = 1 HR. SEPARATION

EXTERIOR WALLS = 1 HOUR FIRE RESISTIVE RATING

PLUMBING FIXTURE COUNT FOR BLACK BOX/EXHIBIT HALL

2010 CPC : TABLE 4-1 & TABLE "A"

OCCUPANCY LOAD FACTOR	WATER CLOSETS REQ.	WATER CLOSETS PROVIDED	LAVATORIES REQ.	LAVATORIES PROVIDED	URINALS REQ.	URINALS PROVIDED	DRINKING FOUNTAINS REQ.	DRINKING FOUNTAINS PROVIDED
A.2	**FIRST FLOOR :** [(10,785/30)/2]= 180 EA.							
180 MEN	2	3	1	3	2	4	2	2
180 WOMEN	8	11	1	3	-	-		
A.2 & B	**SECOND FLOOR :** [(8,612/30)/2)+(301/200)/2)]= 145 EA.							
145 MEN	2	5	1	5	2	1	2	2
145 WOMEN	8	10	1	7	-	-		

NOTE: REFER TO PARKING GARAGE DRAWINGS FOR ALL OTHER CODE ANALYSIS AND COMPLIANCE

CODE ANALYSIS

Scale N/A 1

Bayley Construction
3730 S. Susan St.
Suite 200
Santa Ana, CA. 92704
CA. License 734880
Tel 714-540-8863
Fax 714-556-8863

Bayley Construction
8005 S.E. 28th St.
P.O. Box 9004
Mercer Island, WA. 98040
WA. License BAYLECO343JC
Tel 206-621-8884
Fax 206-343-7728

BAYLEY CONSTRUCTION

DLR Group WWCOT
Architecture Engineering Planning Interiors

4280 Latham Street, Suite H
Riverside, California 92501
T 951.682.0470
F 951.682.1801

wwcot.com
dlrgroup.com

Santa Monica
Sacramento
Riverside
Palm Springs
Modesto
Shanghai, China

Copyright © 2010, DLR Group Inc. of California
DBA DLR Group WWCOT. All Rights Reserved

Public Agency Submittal:
Issued for Bidding:
Issued for Construction:

#	Revisions:
A	09.15.2011 PERMIT SET

PHASE II: FOX ENTERTAINMENT PLAZA: EXHIBIT HALL & BLACK BOX THEATER

3605 Market Street
Riverside, CA 92501

CITY of RIVERSIDE

3900 Main Street , Riverside, CA 92522

Phase:
Revised
DLR Group Project No.75-10603-00

CODE ANALYSIS / EGRESS PLANS

Issued Date: 05.02.2011
Drawn By: Author
Checked By: Checker

B-G003
Sheet №

NATURAL VENTILATION SUMMARY

CALCULATIONS FOR OPENINGS TO PROVIDE NATURAL VENTILATION

C.B.C. Sec. 406.3.3.1

FOR NATURAL VENTILATION PURPOSES, THE EXTERIOR SIDE OF STRUCTURE SHALL HAVE UNIFORMLY DISTRIBUTED OPENINGS ON TWO OR MORE SIDES. THE AREA OF SUCH OPENINGS IN EXTERIOR WALLS ON A TIER MUST BE AT LEAST 20 PERCENT OF THE TOTAL PERIMETER WALL AREA OF EACH TIER. THE AGGREGATE LENGTH OF OPENINGS CONSIDERED TO BE PROVIDING NATURAL VENTILATION SHALL CONSTITUTE A MINIMUM OF 40 PERCENT OF THE PERIMETER OF THE TIER.

TOTAL BUILDING PERIMETER (LEVEL P-1) =	674.83 L.F.
TOTAL BUILDING PERIMETER (LEVELS P-2 to P-4) =	884.00 L.F.
TIER HEIGHT (LEVEL P-1) =	16.00'
TIER HEIGHT (LEVELS P-2 to P-4) =	11.33'
TOTAL PERIMETER WALL AREA (LEVEL P-1) = (674.83 x 16.00) =	10,797.28 sq. ft.
TOTAL PERIMETER WALL AREA (LEVELS P-2 to P-4) = (884.00 x 11.33) =	10,015.72 sq. ft.
TOTAL REQUIRED OPENINGS (LEVEL P-1) = (10,797.28 x .20) =	2,159.46 sq. ft.
TOTAL REQUIRED OPENINGS (LEVELS P-2 to P-4) = (10,015.72 x .20) =	2,003.14 sq. ft.
REQUIRED PERIMETER LENGTH (LEVEL P-1) = (674.83 L.F. x .40) =	269.93 L.F.
REQUIRED PERIMETER LENGTH (LEVELS P-2 to P-4) = (884.00 L.F. x .40) =	353.60 L.F.

OPENINGS PROVIDED (calculated at Level P-1)

NORTH ELEVATION -	1,329.83 sq. ft.	(distributed over 101.00 L.F.)
SOUTH ELEVATION -	865.79 sq. ft.	(distributed over 72.00 L.F.)
EAST ELEVATION -	0.00 sq. ft.	(distributed over 00.00 L.F.)
WEST ELEVATION -	1,395.00 sq. ft.	(distributed over 107.00 L.F.)
TOTAL OPENINGS PROVIDED -	3,590.62 sq. ft.	[33.25% of 10,797.28 sq. ft.]
TOTAL DISTRIBUTED LENGTH -	280.00 L.F.	[41.49% of 674.83 L.F.]

OPENINGS PROVIDED (calculated at Level P-2)

NORTH ELEVATION -	1,920.67 sq. ft.	(distributed over 268.00 L.F.)
SOUTH ELEVATION -	1,092.34 sq. ft.	(distributed over 152.42 L.F.)
EAST ELEVATION -	745.33 sq. ft.	(distributed over 104.00 L.F.)
WEST ELEVATION -	766.83 sq. ft.	(distributed over 107.00 L.F.)
TOTAL OPENINGS PROVIDED -	4,525.17 sq. ft.	[45.18% of 10,015.72 sq. ft.]
TOTAL DISTRIBUTED LENGTH -	631.42 L.F.	[71.43% of 884.00 L.F.]

CAR COUNT and AREA SUMMARY

	AREA	STANDARD 9'-0" x 18'-0"	ACCESSIBLE 9'-0" x 18'-0"	TOTALS
LEVEL P-4	40,328	119	0	119
LEVEL P-3	40,121	123	0	123
LEVEL P-2	40,121	*117	3	120
LEVEL P-1	23,172	27	6	33
TOTALS	143,742	386	9	395

* INCLUDES 16 CLEAN AIR VEHICLE SPACES

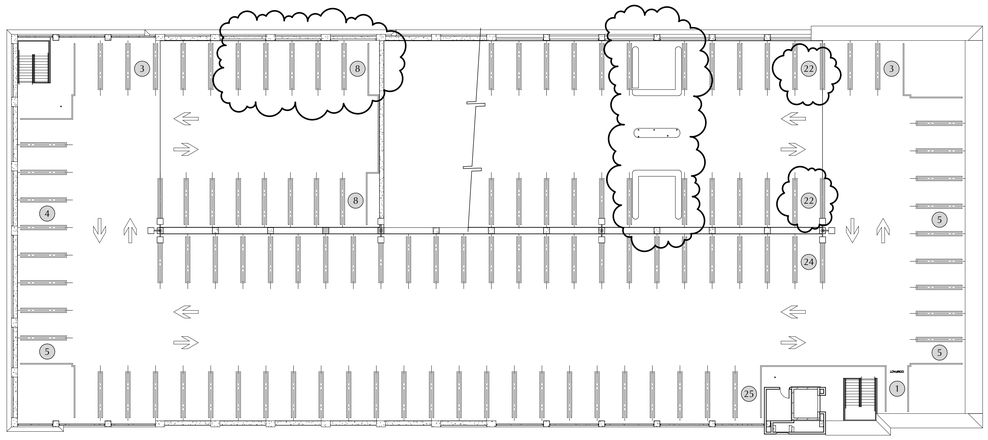

4 PA-0.3 LEVEL P-4 CAR COUNT PLAN
1" = 20'-0"

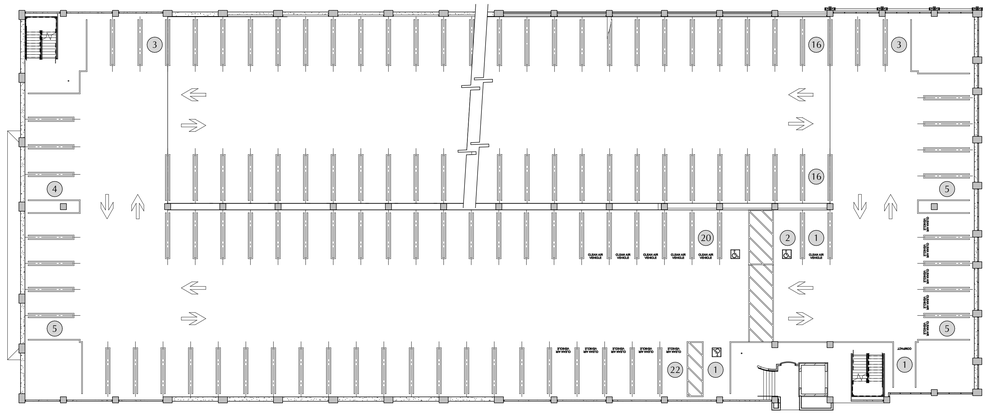

2 PA-0.3 LEVEL P-2 CAR COUNT PLAN
1" = 20'-0"

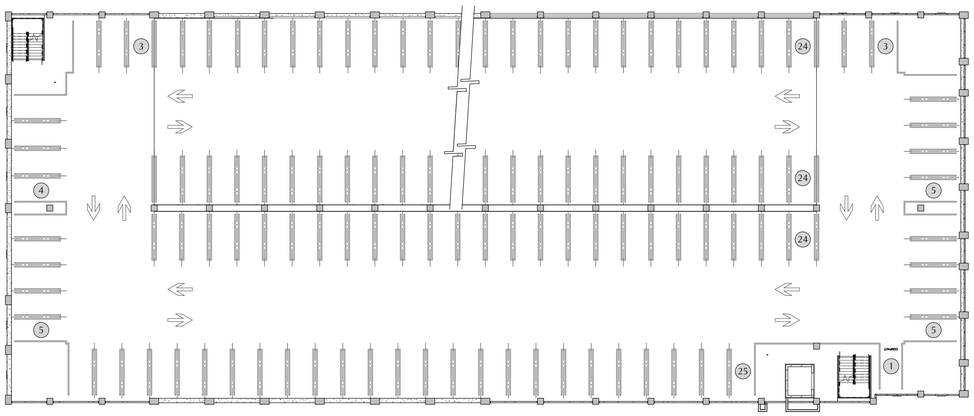

3 PA-0.3 LEVEL P-3 CAR COUNT PLAN
1" = 20'-0"

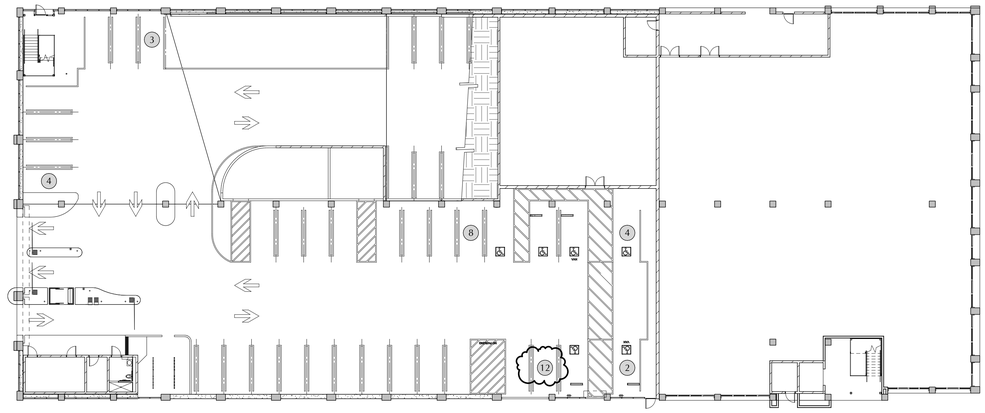

1 PA-0.3 LEVEL P-1 CAR COUNT PLAN
1" = 20'-0"

Bayley Construction
3730 S. Susan St.
Suite 200
Santa Ana, CA. 92704
CA. License 734880
Tel 714-540-8863
Fax 714-556-8863

Bayley Construction
8005 S.E. 28th St.
P.O. Box 9004
Mercer Island, WA. 98040
WA. License BAYLEC034JC
Tel 206-621-8884
Fax 206-343-7728

BAYLEY CONSTRUCTION

Pacific Parking DESIGN
6 Venture, Suite 275 949.341.0066 t
Irvine, California 92618 949.341.0099 f

DLR Group WWCOT
Architecture Engineering Planning Interiors
4280 Latham Street, Suite H 951.682.0470 t
Riverside, California 92501 951.682.1801 f

LICENSED ARCHITECT SCOTT BRAYTON BERMAN C-22700 EXP. 9-30-13 STATE OF CALIFORNIA

Public Agency Submittal:
Issued for Bidding:
Issued for Construction:

Revisions:

A 09.15.2011 PERMIT SET

PHASE II:
FOX
ENTERTAINMENT
PLAZA:
PARKING GARAGE

3601 Market Street
Riverside, CA 92501

CITY of RIVERSIDE

CITY OF RIVERSIDE

3900 Main Street, Riverside, CA 92522

Phase:
Revised 04.19.2011
PPD Project № 10-101

CAR COUNT and AREA SUMMARY and NATURAL VENTILATION SUMMARY

Issued Date: 05.02.2011
Drawn By: RTR
Checked By: SBH

PA-0.3
Sheet №

File Path & Name: C:\Dimension Z\PPD\Projects\2009 - Fox Plaza Parking Structure (Bayley)\Fox PPD Revit\PPD Fox Theater Parking Garage_Owner.rvt
© WWCOT 2009 - Plotted 9/13/2011 10:23:16 AM

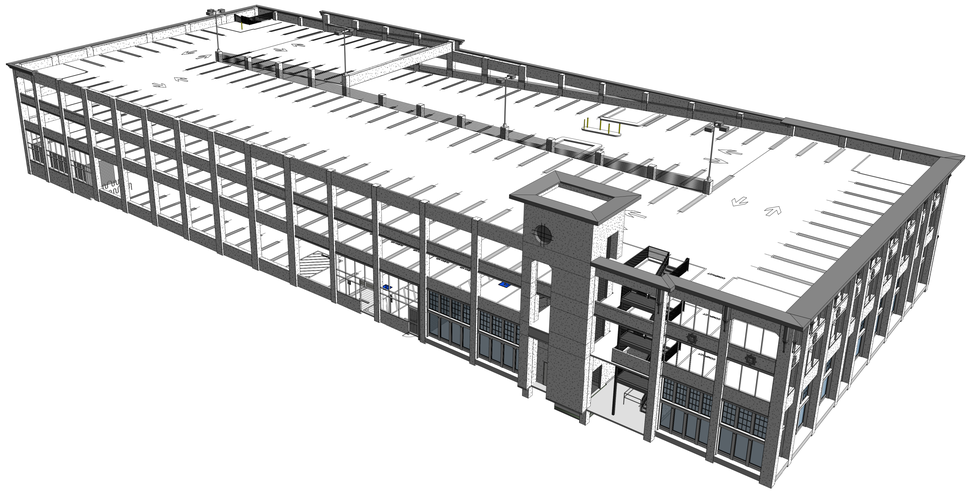

LEVEL P-4 CAR COUNT PERSPECTIVE

119 CARS

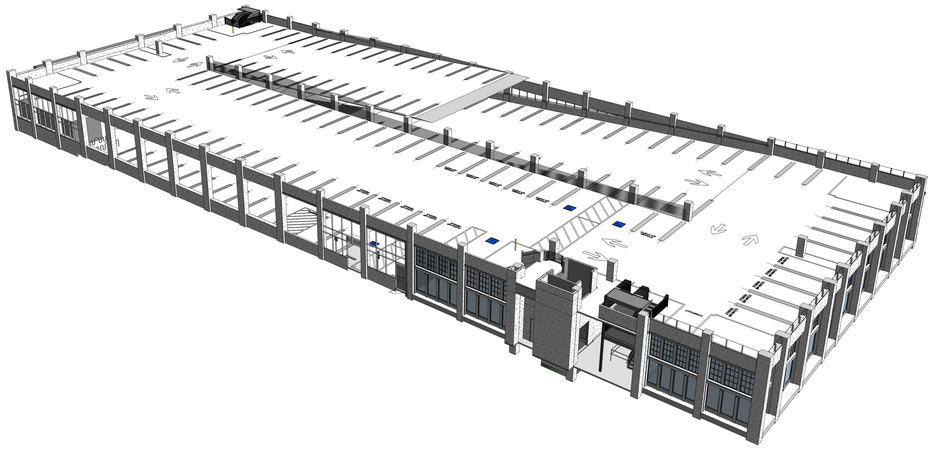

LEVEL P-2 CAR COUNT PERSPECTIVE

120 CARS

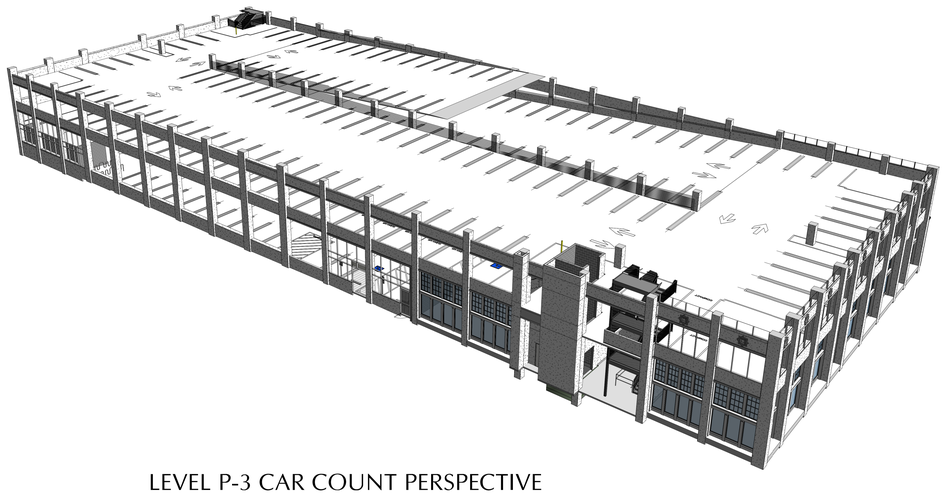

LEVEL P-3 CAR COUNT PERSPECTIVE

123 CARS

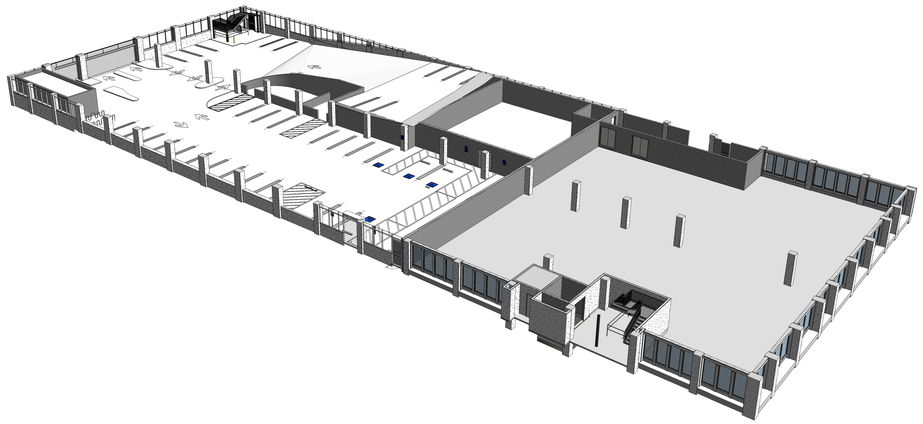

LEVEL P-1 CAR COUNT PERSPECTIVE

33 CARS

Bayley Construction
3730 S. Susan St.
Suite 200
Santa Ana, CA. 92704
CA. License 734880
Tel 714-540-8863
Fax 714-556-8863

Bayley Construction
8005 S.E. 28th St.
P.O. Box 9004
Mercer Island, WA. 98040
WA. License BAYLEC034JC
Tel 206-621-8884
Fax 206-343-7728

Pacific Parking DESIGN

6 Venture, Suite 275 949.341.0066 t
Irvine, California 92618 949.341.0099 f

DLR Group WWCOT
Architecture Engineering Planning Interiors

4280 Latham Street, Suite H 951.682.0470 t
Riverside, California 92501 951.682.1801 f

LICENSED ARCHITECT
SCOTT BRAYTON BERMAN
C-22700
EXP. 9-30-13
STATE OF CALIFORNIA

Public Agency Submittal:
Issued for Bidding:
Issued for Construction:

Revisions:

#		
A	09.15.2011	PERMIT SET

PHASE II: FOX ENTERTAINMENT PLAZA: PARKING GARAGE

3601 Market Street
Riverside, CA 92501

CITY of RIVERSIDE

CITY OF RIVERSIDE

3900 Main Street, Riverside, CA 92522

Phase:
Revised 04.19.2011
PPD Project № 10-101

CAR COUNT PERSPECTIVES

Issued Date: 05.02.2011
Drawn By: RTR
Checked By: SBH

PA-0.4

Sheet №

File Path & Name: C:\Dimension Z\PPD Projects\2009 - Fox Plaza Parking Structure (Bayley)\Fox PPD Revit\PPD Fox Theater Parking Garage_Owner.rvt
© WWCOT 2009 – Plotted 9/13/2011 10:24:15 AM

ABBREVIATIONS

&	And	Jan.	Janitor
L	Angle	Jt.	Joint
@	At	Kit.	Kitchen
℄	Centerline	Lab.	laboratory
ø	Diameter or Round	Lam.	Laminate
#	Pound or Number	Lav.	Lavatory
Acous.	Acoustical	Lkr.	Locker
A.D.	Area Drain	Lt.	Light
Adj.	Adjustable	Max.	Maximum
Aggr.	Aggregate	M.C.	Medicine Cabinet
Al.	Aluminum	Mech.	Mechanical
Approx.	Approximate	Memb.	Membrane
Arch.	Architectural	Met.	Metal
Asb.	Asbestos	Mfr.	Manufacturer
Asph.	Asphalt	Mh.	Manhole
Bd.	Board	Min.	Minimum
Bitum.	Bituminous	Mir.	Mirror
Bldg.	Building	Misc.	Miscellaneous
Blk.	Block	M.O.	Masonry Opening
Blkg.	Blocking	Mtd.	Mounted
Bm.	Beam	Mul.	Mullion
Bot.	Bottom	N.	North
Cab.	Cabinet	N.I.C.	Not In Contract
C.B.	Catch Basin	No. or #	Number
C.D.	Catch Drain	Nom.	Nominal
Cem.	Cement	N.T.S.	Not To Scale
Cer.	Ceramic	O.A.	Overall
C.I.	Cast Iron	Obs.	Obscure
C.G.	Corner Guard	O.C.	On Center
Clg.	Ceiling	O.D.	Outer Diameter (Dim.)
Clkg.	Calking	Off.	Office
Clo.	Closet	Opng.	Opening
Clr.	Clear	Opp.	Opposite
C.O.	Cased Opening	Prcst.	Pre-cast
Col.	Column	Pl.	Plate
Conc.	Conc.	P.Lam.	Plastic Laminate
Conn.	Connection	Plas.	Plaster
Constr.	Construction	Plywd.	Plywood
Cont.	Continuous	Pr.	Pair
Corr.	Corridor	Pt.	Point
Ctsk.	Countersunk	P.T.D.	Paper Towel Dispenser
Cntr.	Counter	P.T.D./r	Combined Paper Towel Dispenser & Receptacle
Ctr.	Center		
Dbl.	Double	Ptn.	Partition
Dept.	Department	P.T.R.	Paper Towel Receptacle
D.F.	Drinking Fountain	Q.T.	Quarry Tile
Det.	Detail	R.	Riser
Dia.	Diameter	Rad.	Radius
Dim.	Dimension	R.D.	Roof Drain
Disp.	Dispenser	Ref.	Reference
Dn.	Down	Refr.	Refrigerator
D.O.	Door Opening	Rgtr.	Register
Dr.	Door	Reinf.	Reinforced
Dwr.	Drawer	Req.	Required
Ds.	Downspout	Resil.	Resilient
D.S.P.	Dry Standpipe	Rm.	Room
Dwg.	Drawing	R.O.	Rough Opening
E.	East	Rwd.	Redwood
Ea.	Each	R.W.L.	Rain Water Leader
E.J.	Expansion Joint	S.	South
E.L.	Elevation	S.C.	Solid Core
Elec.	Electrical	S.C.D.	Seat Cover Dispenser
Elev.	Elevator	Sched.	Schedule
Emer.	Emergency	S.D.	Soap Dispenser
Encl.	Enclosure	Sect.	Section
E.P.	Electrical Panelboard	Sh.	Shelf
Eq	Equal	Shr.	Shower
Eqpt.	Equipment	Sht.	Sheet
E.W.C.	Electric Water Cooler	Sim.	Similar
Exst.	Existing	S.N.D.	Sanitary Napkin Disp.
Expo.	Exposed	S.N.R.	Sanitary Napkin Recept.
Exp.	Expansion	Spec.	Specification
Ext.	Exterior	Sq.	Sqare
F.A.	Fire Alarm	S.St.	Stainless Steel
F.B.	Flat Bar	S.Sk.	Service Sink
F.D.	Floor Drain	Sta.	Station
Fdn.	Foundation	Std.	Standard
F.E.	Fire Extinguisher	Stl.	Steel
F.E.C.	Fire Extinguisher Cab.	Stor.	Storage
F.H.C.	Fire Hose Cabinet	Strl.	Structural
Fin.	Finish	Susp.	Suspended
Fl.	Floor	Sym.	Symmetrical
Flash.	Flashing	Trd.	Tread
Fluor.	Fluorescent	T.B.	Towel Bar
F.O.C.	Face Of Concrete	T.C.	Top Of Curb
F.O.F.	Face Of Finish	Tel.	Telephone
F.O.S.	Face Of Studs	Ter.	Terrazzo
Fprf.	Fireproof	T.&G.	Tongue And Groove
F.S.	Full Size	Thk.	Thick
Ft.	Foot Or Feet	T.P.	Top Of Pavement
Ftg.	Footing	T.P.D.	Toilet Paper Dispenser
Furr.	Furring	T.V.	Television
Fut.	Future	T.W.	Top Of Wall
Ga.	Gauge	Typ.	Typical
Galv.	Galvanized	Unf.	Unfinished
G.B.	Grab Bar	U.O.N.	Unless Otherwise Noted
Gl.	Glass	Ur.	Urinal
Gnd.	Ground	Vert.	Vertical
Gr.	Grade	Vest.	Vestibule
Gyp.	Gypsum	W.	West
H.B.	Hose Bibb	W/	With
H.C.	Hollow Core	W.C.	Water Closet
Hdwd.	Hardwood	Wd.	Wood
Hdwe.	Hardware	W/O	Without
H.M.	Hollow Metal	Wp.	Waterproof
Horiz.	Horizontal	Wsct.	Wainscot
Hr.	Hour	Wt.	Weight
Hgt.	Height		
I.D.	Inside Diameter (Dim.)		
Insul.	Insulation		
Int.	Interior		

SYMBOLS KEY

DETAIL SYMBOL
DETAIL NUMBER
DRAWING NUMBER

SECTION/ELEVATION SYMBOL

INTERIOR ELEVATIONS
(SHADED ARROWS INDICATE SHOWN ELEVATIONS)

COLUMN LINES
(LETTERS IN LONGITUDINAL DIRECTION)
(NUMBERS IN TRANSVERSE DIRECTION)

DOOR NUMBER

WORK POINT, CONTROL POINT, DATUM POINT, FLOOR ELEVATION POINT

EQUIPMENT TYPE

MILLWORK ITEM

KEYNOTE SYMBOL

DISABLED FACILITIES SYMBOL

MATERIAL/COLOR SYMBOL

WINDOW TYPE

LOUVER TYPE

ROOM IDENTIFICATION
ROOM NAME
ROOM NUMBER

PARTITION TYPE NUMBER

MATCH LINE

CENTER LINE

PLAN BLOW-UP SYMBOL & DETAIL SYMBOL

REVISION (CLOUD AROUND REVISION OPTIONAL)

FD FLOOR DRAIN

BOLLARD

RD ROOF DRAIN

295.88 FINISH FLOOR ELEVATION (ARCH'L)

CD CATCH DRAIN

295.88 FINISH GRADE/SURFACE ELEVATION (PROVIDED BY CIVIL)

OH OVERFLOW HOLE

FE FIRE EXTINGUISHERS

DSP DRY STANDPIPE

HOSE BIBB

CONTRACT LIMIT LINE

MATERIALS KEY

EARTH/COMPACT FILL

POROUS FILL/GRAVEL

CONCRETE MASONRY UNIT

FACE/COMMON BRICK

CONCRETE

SAND/MORTAR PLASTER

STONE

WATERPROOF MEMBRANE

PLYWOOD

METALS

FINISHED WOOD

BLOCKING/ROUGH WOOD

RIGID INSULATION

BATT INSULATION

BRICK ELEVATION

STONE

GYPSUM BOARD

GLASS

BAYLEY CONSTRUCTION

Bayley Construction
3730 S. Susan St.
Suite 200
Santa Ana, CA, 92704
CA. License 734880
Tel 714-540-8863
Fax 714-556-8863

Bayley Construction
8005 S.E. 28th St.
P.O. Box 9004
Mercer Island, WA. 98040
WA. License BAYLECO34JC
Tel 206-621-8884
Fax 206-343-7728

Pacific Parking DESIGN

6 Venture, Suite 275 949.341.0066 t
Irvine, California 92618 949.341.0099 f

DLR Group WWCOT
Architecture Engineering Planning Interiors

4280 Latham Street, Suite H 951.682.0470 t
Riverside, California 92501 951.682.1801 f

LICENSED ARCHITECT SCOTT BRAYTON HERMAN C-22700 EXP. 9-30-13 STATE OF CALIFORNIA

Public Agency Submittal:
Issued for Bidding:
Issued for Construction:

Revisions:

09.15.2011 PERMIT SET

PHASE II:
FOX
ENTERTAINMENT
PLAZA:
PARKING GARAGE

3601 Market Street,
Riverside, CA 92501

CITY of RIVERSIDE

CITY OF RIVERSIDE

3900 Main Street, Riverside, CA 92522

Phase:
Revised
PPD Project № 10-101

SYMBOLS KEY,
MATERIALS KEY &
ABBREVIATIONS

Issued Date: 05.02.2011
Drawn By: RTR
Checked By: SBH

PA-0.5

Sheet №

A. Site Development & Accessible Route of Travel

1. Accessible Route of Travel is defined as "a continuous unobstructed path connecting all accessible elements and spaces in an accessible building or facility that can be negotiated by a person with a disability using a wheelchair and that is also safe for and usable by persons with other disabilities, and that is consistent with the definition of "Path of travel". (1102B)
2. Site development and grading shall be designed to provide access to all entrances and exterior ground floor exits, and access to normal paths of travel, and where necessary to provide access, shall incorporate pedestrian ramps, curb ramps, etc. (1127B.1)
3. At least one accessible route within the boundary of the site shall be provided from public transportation stops, accessible parking and accessible passenger loading zones and public streets or sidewalks to the accessible building entrance they serve. The accessible route shall, to the maximum extent feasible, coincide with the route for the general public. (1114B.1.2)
4. The accessible route of travel shall be the most practical direct route between accessible building entrances, accessible site facilities, and the accessible entrance to the site. If access is provided for pedestrians from a pedestrian tunnel or elevated walkway, entrances to the building from each tunnel or walkway must be accessible. (1127B.1)
5. When more than one building or facility is located on a site, accessible routes of travel complying with Section 1114B.1.2 shall be provided between buildings and accessible site facilities, accessible elements, and accessible spaces that are on the same site. (1127B.1)
6. When a building or portion of a building is required to be accessible or adaptable, an accessible route of travel complying with Sections 1102B, 1114B, 1124B, 1133B.3, 1133B.5, 1133B.7 and 1133B.8.6 shall be provided to all portions of the building, to accessible building entrances, and between the building and the public way. (1114B.1.2)
7. Except within an individual dwelling unit, an accessible route of travel shall not pass through kitchens, storage rooms, restrooms, closets or other spaces used for similar purposes. (1114B.1.2)
8. At least one accessible route shall connect the following: (1114B.1.2)
   a) Accessible buildings, facilities, elements and spaces that are on the same site.
   b) Accessible building or facility entrances with all accessible spaces and elements and with all accessible dwelling units within the building or facility.
   c) The accessible route shall, to the maximum extent feasible coincide with the route for the general public.
   d) Accessible entrance of each accessible dwelling unit with those exterior and interior spaces and facilities that serve the accessible dwelling unit.
9. Where more than one route of travel is provided, all routes shall be accessible. (1114B.1.2)

B. Accessible Parking

See sheet PA-9.1 for accessible parking notes and details.

C. Passenger Drop-Off and Loading Zones

1. When provided, passenger drop-off and loading zones shall be located on an accessible route of travel. (1131B.1)
2. Where provided, one passenger drop-off and loading zone shall provide an access aisle at least 60 inches wide and 20 feet long adjacent and parallel to the vehicle pull-up space. Vehicle standing spaces and access aisles shall be level with surface slopes not exceeding 1:50 (2 percent) in all directions. If there are curbs between the access aisle and the vehicle pull-up space, then a curb ramp shall be provided. (1131B.2.1, Fig 11B-24)
3. Provide minimum vertical clearance of 114 inches at accessible passenger loading zones and along at least one vehicle access route to such areas from site entrances and exits. (1131B.2.2)
4. Valet parking facilities shall provide a passenger loading zone complying with Section 1131B.2 and shall be located on an accessible route of travel to the entrance of the facility. The parking space requirements of Section 1129B through 1130B apply to facilities with valet parking. (1131B.3)
5. Where provided, bus stop pads shall have a firm, stable surface with a minimum clear length of 96 inches (measured from the curb or roadway edge) and a minimum clear width of 60 inches (measured parallel to the vehicle roadway) to the maximum extent allowed by legal or site constraints. Bus stop pads shall connect to streets, sidewalks or pedestrian paths as part of an accessible route. Newly constructed bus stop pads must provide a square curb surface between the pad and the road or other detectable warning approved by Department of State Architect in accordance with Section 1133B.8.5. Bus stop pads shall be at the same slope as the roadway in the direction parallel to the roadway and a maximum 2% slope perpendicular to the roadway. (1121B.2.1)
6. Where provided, bus stop shelters shall be installed so as to permit a wheelchair user to enter the shelter from the public way and access a clear floor area of 30 inches by 48 inches, completely within the shelter. Such shelters shall be connected by an accessible route to the boarding area. (1121B.2.1)

D. Walks & Sidewalks

1. Walks and sidewalks subject to these regulations shall have a continuous common surface, not interrupted by steps or by abrupt changes in level exceeding ½". (1133B.7.1)
2. Walks and sidewalks shall be 48" minimum in width. (1133B.7.1, Fig 11B-27(a))
3. When changes in level not exceeding 1/2" occur, they shall be beveled with a slope no greater than one unit vertical to 2 units horizontal (50 percent), except that level changes not exceeding 1/4" may be vertical. (1133B.7.4, Fig 11B-5E(c) & (d))
4. When abrupt changes in level greater than ½" are necessary; they shall comply with the requirements for curb ramps. (1133B.7.4)
5. Walk and sidewalk surfaces shall be slip-resistant as follows: (1133B.7.1)
   a) Surfaces with a slope of less than 6% gradient shall be at least a slip -resistant as that described as a medium salted finish. (1133B.7.1.1)
   b) Surfaces with a slope of 6% or greater gradient shall be slip-resistant. (1133B.7.1.2)
6. When the slope in the direction of travel of any walk exceeds one vertical to 20 units horizontal (5 percent gradient), it shall comply with the provisions of Section 1133B.5. (1133B.7.3)
7. Walk and sidewalk surface cross slopes shall not exceed 1/4" per foot. (1133B.7.1.3)
8. All walks with continuous gradients shall have level areas at least 5 feet in length at intervals of at least every 400 feet. (1133B.7.6)
9. Walks shall be provided with a level area not less than 60 inches by 60 inches at a door or gate that swings toward the walk, and not less than 48 inches wide by 44 inches deep at a door or gate that swings away from the walk. (1133B7.5, Fig 11B-26A & 26B)
10. Level area of walks shall extend 24 inches to the side of the strike edge of a door or gate that swings toward the walk. (1133B.7.5, Fig 11B-26B)
11. Walks, sidewalks, and pedestrian ways shall be free of gratings whenever possible. For gratings located in the surface of any of these areas, grid openings in gratings shall be limited to ½" in the direction of traffic flow. If gratings have elongated openings, they shall be placed so that the long dimension is perpendicular to the dominant direction of travel. (1133B7.2, Fig 11B-7E(a))

E. Curb Ramps

Curb Ramp is defined as "a sloping pedestrian way, intended for pedestrian traffic, which provides access between a walk or sidewalk to a surface located above or below an adjacent curb face". (1102B)

1. Curb Ramps shall be constructed at each corner of street intersections where a pedestrian way crosses a curb. The preferred and recommended location for curb ramps is in the center of the crosswalk or each street corner. Where it is necessary to locate a curb ramp in the center of the curb return and the street surfaces are marked to identify pedestrian crosswalks, the lower end of the curb ramp shall terminate within such crosswalk areas. (Sec 1127B.5.1, Fig 11B-20C and 11B-22.)
2. Provide a curb ramp at (1127B.5.1)
3. Curb ramps shall be a minimum of 4 feet in width and shall lie, generally, in a single sloped plane, with a minimum of surface warping and cross slope. (1127B.5.2)
4. The slope of curb ramps shall not exceed one unit vertical to 12 units horizontal (8.33 percent slope). (1127B.5.3)
5. Transitions from ramps to walks, gutters, or streets shall be flush and free of abrupt changes. (1127B.5.3)
6. Maximum slopes of adjoining gutters, road surface immediately adjacent to the curb ramp or accessible route, shall not exceed one unit vertical to 20 units horizontal (5 percent slope) within 4 feet of the top and bottom of the curb ramp. The slope of the fanned or flared sides of curb ramps shall not exceed one unit vertical to 10 horizontal (10 percent slope). (1127B.5.3)
7. A level landing 4 feet deep shall be provided at the upper end of each curb ramp over its full width to permit safe egress from the ramp surface, or the slope of the fanned or flared sides of the curb ramp shall not exceed one unit vertical to 12 units horizontal (8.33 percent slope). (1127B.5.4)
8. The surface of each curb ramp and its flared sides shall comply with Section 1124B, Ground and Floor Surfaces, and shall be of contrasting finish from that of the adjacent sidewalk. (1127B.5.5)
9. All curb ramps shall have a grooved border 12 inches wide at the level surface of the sidewalk along the top and each side approximately 3/4" on center. All curb ramps constructed between the face of the curb and the street shall have a grooved border at the level surface of the sidewalk. (1127B.5.6, Fig. 11B-19A & 19B)
10. Curb ramps shall have a detectable warning that extends the full width and depth of the curb ramp, excluding the flared sides, inside the grooved border. Detectable warnings shall consist of raised truncated domes with a diameter of nominal 0.9 inch at the base tapering to 0.45 inch at the top, a height of nominal 0.2 inch, and a center-to-center spacing of nominal 2.35 inches, in compliance with Figure 11B-23A. "Nominal" here shall be in accordance with Section 12-11A and B-102, State Referenced Standards Code. The detectable warning shall contrast visually with adjoining surfaces, either light-on-dark or dark-on-light. The material used to provide contrast shall be an integral part of the walking surface. The domes may be constructed in a variety of methods, including cast-in-place or stamped, or may be part of a prefabricated surface treatment. Only approved DSA-AC detectable warning products and directional surfaces shall be installed as provided in the California Code of Regulations (CCR), Title 24, Part 1, Articles 2, 3, and 4. (1127B.5.7)
11. Curb ramps shall be located or protected to prevent their obstruction by parked vehicles. (1127B.5.8)

F. Pedestrian Grade Separations (Overpasses & Underpasses)

1. Pedestrian ramps on pedestrian grade separations shall comply with the requirements of Section 1133B.5 for ramps. (1128B)
2. Cross slopes of walking surfaces shall be the minimum possible and shall not exceed ¼ inch per foot. The slope of any appreciably warped walking surface shall not exceed 1 unit vertical in 12 units horizontal in any direction. (1128B)
3. Where pedestrian grade separations cross streets or other vehicular traffic ways, and where a street level crossing can reasonably and safely be used by persons with disabilities, there shall be provided conforming curb ramps and a usable pathway. (1128B)

G. Ramps (Exterior or Interior)

1. Any path of travel shall be considered a ramp if its slope is greater than 1" rise in 20' of horizontal run. (1133B.5.1)
2. The maximum slope of a ramp that serves any exit way, provides access for persons with physical disabilities, or is in the accessible route of travel shall be 1 foot rise in 12 feet of horizontal run (8.3 percent gradient). The least possible slope shall be used for any ramp. (1133B.5.3)
3. The cross slope of ramp surfaces shall be no greater than 1:50. (1133B.5.3.1)
4. Pedestrian ramps shall have a minimum clear width of 48 inches, unless required to be wider by some other provision of this code. (1133B.5.2)(1133B.5.2)
5. Where a pedestrian ramp is the only exit discharge path serving entrances to buildings or when it serves an occupant load of 300 or more, the ramp shall have a minimum clear width of 60 inches. (1133B.5.2)
6. Level landings shall be provided at the top and bottom of each ramp. (1133B.5.4.1, Fig 11B-38 & 39)
7. Intermediate landings shall be provided at intervals not exceeding 30 inches of vertical rise and at each change of direction. (1133B.5.4.1, Fig 11B-38 & 39)
8. Top landings shall be not less than 60 inches wide and shall have a length of not less than 60 inches in the direction of ramp run. Landings at the bottom of ramps shall have a dimension in the direction of ramp run of not less than 72 inches. (1133B.5.4.2, Fig 11B-38 & 39)
9. Doors in any position shall not reduce the minimum dimension of the landing to less than 42 inches and shall not reduce the required width by more than 3 inches when fully open. (1133B.5.4.3, Fig 11B-39(b))
10. The width of the landing shall extend 24 inches past the strike edge of any door or gate for exterior ramps and 18 inches past the strike edge for interior ramps.(1133B.5.4.4, Fig 11B-39)
11. All ramp landings shall be level with maximum slope in any direction not to exceed ¼ inch per foot (2.083 percent slope). (1133B.5.4.1, 1102B)
12. At bottom and intermediate landings, the width shall be at least the same as required for the ramp. (1133B.5.4.5, Fig 11B-38 & 39)
13. Intermediate and bottom landings at a change of direction in excess of 30 degrees shall have a dimension in the direction of ramp run of not less than 72 inches to accommodate the handrail extension. (1133B.5.4.6, Fig 11B-38)
14. Other intermediate landings shall have a dimension in the direction of ramp run of not less than 60 inches. (1133B.5.4.7, Fig 11B-38)
15. Handrails are required on ramps that provide access if the ramp slope exceeds 1 foot rise in 20 feet of horizontal run (5 percent gradient), except that at exterior door landings, handrails are not required on ramps less than 6 inches rise or 72 inches in length. (1133B.5.5.1)
16. Handrails shall be placed on each side of each ramp, shall be continuous the full length of the ramp, shall be 34 to 38 inches above the ramp surface to the top of the handrails, shall extend a minimum of 1 foot beyond the top and bottom of the ramp, and shall parallel the floor or ground surface. Handrails shall always be continuous and the ends of handrails shall be either rounded or returned smoothly to the floor, wall or post. (1133B.5.5.1, Fig 11B-27(b) & (c))
17. The grip portion of handrails shall be not less than 1 1/4 inches nor more than 1-1/2 inches in cross sectional nominal dimension, or the shape shall provide an equivalent gripping surface, and all surfaces shall be smooth with no sharp corners. Handrails shall not rotate within their fittings. (1133B.5.5.1, Fig 11B-36)
18. Handrail projecting from a wall shall have a space of 1 1/2 inches between the wall and the handrail.(1133B.5.5.1, Fig 11B-36)
    a) Handrails may be located in a recess if the recess is a maximum of 3 inches deep and extends at least 18 inches above the top of the rail. (1133B.5.5.1, Fig 11B-36)
    b) Any wall or other surface adjacent to handrails shall be free of sharp or abrasive elements. Edges shall have a minimum radius of 1/8 inch. (1133B.5.5.1, Fig 11B-36)
19. Where the ramp surface is not bounded by a wall, the ramp shall comply with one of the following requirements. (1133B.5.6, Fig 11B-27(b) & (c))
    a) A guide curb a minimum of 2 inches in height shall be provided at each side of the ramp; (1133B.5.6.1) OR
    b) A wheel guide rail shall be provided, centered 3 inches, plus or minus 1 inch above the surface of the ramp. (1133B.5.6.2)
20. In existing buildings or facilities where the extension of the handrail in the direction of the ramp run would create a hazard, the extension may be turned 90 degrees to the run of the ramp. (1133B.5.5.1.1, 1133B.4.2.4)
21. Ramps more than 30" above the adjacent ground shall be provided with guards that comply with Section 1013. Such guards shall be continuous from the top of the ramp to the bottom of the ramp. (1133B.5.7)

H. Entrances & Exits

Exit as defined is "that portion of a means of egress system which is separated from other interior spaces of a building or structure by fire-resistance-rated construction and opening protectives as required to provide a protected path of egress travel between the exit access and the exit discharge. Exits include exterior exit doors at ground level, exit enclosures, exit passageways, exterior exit stairs, exterior exit ramps and horizontal exits." (1002.1)

Public Way as defined is "a street, alley or other parcel of land open to the outside air leading to a street, that has been deeded, dedicated or otherwise permanently appropriated to the public for public use and which has a clear width and height of not less than 10 feet." (1002.1)

1. All entrances and exterior ground floor exit doors to buildings and facilities shall be made accessible to persons with disabilities. (1133B.1.1.1.1)
2. Revolving doors shall not be used as a required entrance for persons with disabilities. (1133B.2.3.3)
3. During periods of partial or restricted use of a building or facility, the entrances used for primary access shall be accessible to and usable by persons with disabilities. (1133B.1.1.1.2)
4. Recessed doormats shall be adequately anchored to prevent interference with wheelchair traffic. (1133B.1.1.1.3, Fig 11B-25)
5. All gates, including ticket gates, shall meet all applicable accessibility specifications of doors. (1133B.1.1.1.4)
6. Every required exit doorway shall be capable of opening at least 90 degrees, shall have a minimum clear opening of 32 inches, and shall be of a size as to permit the installation of a door not less than 3 feet in width and not less than 6'-8" in height. (1133B.2.2)
7. The space between two consecutive door openings in a vestibule, serving other than a required exit stairway, shall provide a minimum of 48 inches of clear space from any door opening into such vestibule when the door is positioned at an angle of 90 degrees from its closed position. Doors in a series shall swing either in the same direction or away from the space between the doors. See Figures 11B-30 & 11B-31. (1133B.2.4.4)

I. Doors

1. Door handles, pulls, latches, locks and other operating devices on doors required to be accessible shall not require tight grasping, tight pinching or twisting of the wrist to operate. Manually operated bolts or surface bolts are not permitted. The unlatching of any door or leaf shall not require more than one operation. (1008.1.8)
2. Latching and locking doors that are hand activated and which are in a path of travel shall be operable with a single effort by lever type hardware, by panic bars, push-pull activating bars, or other hardware designed to provide passage without requiring the ability to grasp the opening hardware. (1133B.2.5.2)
3. Hand-activated door opening hardware shall be centered between 30" and 44" above the floor. (1133B.2.5.2)
4. When installed, doorways shall have a minimum clear opening of 32 inches with the door open 90 degrees. (1133B.1.1.1.1, Fig 11B -5B & 11B-33)
5. For hinged doors, the opening width shall be measured with the door positioned at an angle of 90 degrees from its closed position. (1133B.2.3, Fig 11B-5B)
6. Where a pair of doors is utilized, at least one of the doors shall provide a clear, unobstructed opening width of 32 inches with the leaf positioned at an angle of 90 degrees from its closed position. (1133B.2.3.1)
7. When an automatic or power assisted door operator is utilized to operate a pair of doors, at least one of the doors shall provide a clear, unobstructed opening width of 32" with the door positioned at an angle of 90 degrees from its closed position. Automatic doors shall comply with BHMA A156.10 or BHMA A156.19. (1133B.2.3.2)
8. Minimum maneuvering clearances at doors shall be as shown in Figure 11B-26A & 11B-26B. The floor or ground area within the required clearances shall be level and clear. (1133B.2.4.2)
9. There shall be a level and clear floor or landing on each side of a door. The level area shall have a length in the direction of door swing of at least 60" and the length opposite the direction of door swing of 48" as measured at right angles to the plane of the door in the closed position. Where the plane of the doorway is offset or located in an alcove a distance more than 8 inches measured from the plane of the doorway to the face of the wall, the door shall be provided with 60" maneuvering clearance for front approach. (1133B.2.4.2, 1133B.2.5.3, Fig 11B-26, Fig 11B-33a)
10. The width of the level area on the side to which the door swings shall extend 24 inches past the strike edge of the door for exterior doors and 18 inches past the strike edge for interior doors. Where the plane of the doorway is offset 8 or more inches from any obstruction within 18 inches measured laterally on the latch side, the door shall be provided with maneuvering clearance for front approach. (1133B.2.4.3, 1133B.2.4.5, 1133B.2.5.3, Fig 11B-33(a))
11. Provide clear space of 12" past strike edge of the door on the opposite side to which the door swings if the door is equipped with both a latch and a closer. (Fig 11B-26(a))
12. The floor or landing shall be not more than ½ inch lower than the threshold of the doorway. (1133B.2.4.1)
13. The bottom 10" of all doors except automatic and sliding shall have a smooth, uninterrupted surface to allow the door to be opened by a wheelchair footrest without creating a trap or hazardous condition. Where narrow frame doors are used, a 10" high smooth panel shall be installed on the push side of the door, which will allow the door to be opened by a wheelchair footrest without creating a trap or hazardous condition. (1133B.2.6, Fig 11B-29)
14. Maximum effort to operate exterior and interior doors shall not exceed 5 pounds, with such pull or push effort being applied at right angles to hinged doors and at the center plane of sliding or folding doors. Compensating devices or automatic door operators may be utilized to meet the above standards. When fire doors are required, the maximum effort to operate the door may be increased to the minimum allowable by the appropriate administrative authority, not to exceed 15 lbf. (1133B.2.5)
15. When the door has a closer, then the sweep period of the closer shall be adjusted so that from an open position of 70 degrees, the door will take at least 3 seconds to move to a point 3 inches from the latch, measured to the landing edge of the door. (1133B.2.5.1)
16. Where turnstiles and crowd control barriers are utilized in a facility for the purpose of providing fully controlled access, such as where an admission price is charged, a door or gate that is accessible to persons with disabilities shall be provided adjacent to each turnstile exit or entrance. This alternate passageway shall be maintained in an unlocked condition during business hours and the door or gate shall not activate a publicly audible alarm system. The door or gate may be latched where all gates are restricted and controlled by an attendant and a sign is posted stating, "All gates are restricted and controlled by an attendant." The accessible door or gate shall provide the same use pattern. Where posts, rails, or other pedestrian controls are utilized to create crowd control aisles or lanes, a minimum aisle width not less than indicated in Figure 11B-5E (a) and (b) with 32 inches of clear opening. (1133B.2.3.4)

J. Floors & Levels

Level area is defined as "a specified surface that does not have a slope in any direction exceeding 1/4 inch in one foot from the horizontal (2.083% gradient)." (1102B)

1. In buildings and facilities, floors of a given story shall be a common level throughout, or shall be connected by pedestrian ramps, passenger elevators, or special access lifts. (1120B.1)
2. Ground and floor surfaces along accessible routes and in accessible rooms and spaces, including floors, walks, ramps, stairs, and curb ramps, shall be stable, firm, and slip-resistant. (1120B.2 & 1124B.1)
3. Changes in level up to ¼ inch may be vertical and without edge treatment. (1124B.2, Fig 11B-5E(c))
4. Changes in level between ¼ inch and ½ inch shall be beveled with a slope no steeper that 1:2. (1124B.2, Fig 11B-5E(d))
5. If carpet or carpet tile is used on a ground or floor surface, it shall be securely attached; have a firm cushion, pad or backing or no cushion or pad; and have a level loop, textured loop, level cut pile, or level cut/uncut pile texture. The maximum pile height shall be ½ inch. Exposed edges of carpet shall be fastened to floor surfaces and have trim along the entire length of the exposed edge. Carpet edge trim shall comply with Section 1124B.2. (1124B.3, Fig 11B-7E)
6. If gratings are located on floors, then they shall have spaces no greater than ½ inch wide in one direction. If gratings have elongated openings, they shall be placed so that the long dimension is perpendicular to the dominant direction of travel. (1124B.4, Fig 11B-7E)

K. Corridors & Aisles

1. Every corridor and hallway serving an occupant load of 10 or more shall not be less than 44 inches in width. (1133B.3.1)
2. Corridors and hallways serving an occupant load of less than 10 shall not be less than 36 inches in width. (1133B.3.1)
3. Corridors which are located on accessible route and exceed 200 feet in length shall:(1133B.3.2, Fig 11B-34)
   a) Have a minimum clear width of 60"; OR
   b) Have, at reasonable intervals, a 60 inches by 60 inches minimum wheelchair turning space or passing alcove; not to exceed 200 feet; OR
   c) Have, at a central location, an intervening crossing or tee corridor, a minimum of 44 inches in width
4. Circulation aisles and pedestrian ways shall be sized according to functional requirements and in no case shall be less than 36 inches in clear width. (1105B.3.6)
5. Every portion of every building in which are installed seats, tables, merchandise, equipment, or similar materials shall be provided with aisles leading to an exit. (1133B.6.1)
6. Every aisle shall be not less than 36 inches wide if serving only one side, and not less than 44 inches wide if serving both sides. (1133B.6.2)

L. Hazards & Protruding Objects

1. Abrupt changes in level, except between a walk or sidewalk and an adjacent street or driveway, exceeding 4 inches in a vertical dimension, such as at planters or fountains located in or adjacent to walks, sidewalks, or other pedestrian ways, shall be identified by warning curbs projecting at least 6 inches in height above the walk or sidewalk surface to warn the blind of a potential drop off. (1133B.8.1)
2. When a guard or handrail is provided, no curb is required when a guide rail is provided centered 3 inches plus or minus 1 inch above the surface of the walk or sidewalk, the walk is 5 percent or less gradient or no adjacent hazard exists. (1133B.8.1, Fig 11B-27(c)
3. Objects projecting from walls with their leading edges between 27 inches and 80 inches above the finished floor shall protrude no more than 4 inches into walks, halls, corridors, passageways, or aisles. (1133B.8.6.1, Fig 11B-7A)
4. Objects mounted with their leading edges at or below 27 inches above the finished floor may protrude any amount into walks, halls, corridors, passageways, or aisles. (1133B.8.6.1, Fig 11B-7A)
5. Free-standing objects mounted on posts or pylons may overhang 12inches maximum from 27 inches to 80 inches above the ground or finished floor. (1133B.8.6.1, Fig 11B-7B)
6. Protruding objects shall not reduce the clear width of an accessible route or maneuvering space. (1133B.8.6.1, FIG 11B-7D)
7. Walks, halls, corridors, passageways, aisles, or other circulation spaces shall have 80 inches minimum clear head room. (1133B.8.6.2, Fig 11B-7A & 7C)
8. Any obstruction that overhangs a pedestrian way shall be a minimum of 80 inches above the walking surface as measured from the bottom of the obstruction. (1133B.8.2, Fig 11B-28)
9. Where a guy support is used parallel to a path of travel, including, but not limited to sidewalks, a guy brace, sidewalk guy or similar device shall be used to prevent an overhanging obstruction as defined. (1133B.8.2)
10. If a walk crosses or adjoins a vehicular way, and the walking surfaces are not separated by curbs, railings, or other elements between the pedestrian areas and vehicular areas, the boundary between the areas shall be defined by a continuous detectable warning which is 36 inches wide, complying with Section 1121B.3.1, Item 8(a). (1133B.8.5)
11. Transit boarding platforms shall conform to the requirements of Section 1121B.3.1, Item 8(b). Only approved DSA/AC detectable warning products and directional surfaces shall be installed as provided in the California Code of Regulations, Title 24, Part 1, Articles 2, 3, and 4. (1133B.8.4 &1133B.8.5)

M. Stairways

1. Stairways shall have handrails on each side, and every stairway required to be more than 88 inches in width shall be provided with not less than one intermediate handrail for each 88 inches of required width. Intermediate handrails shall be spaced approximately equally across the entire width of the stairway. Handrails shall be continuous along both sides of the stairway. (1133B.4.1.1)
2. The top of handrail gripping surface shall be mounted 34 to 38 inches above the nosing of the treads. (1133B.4.2.1, Fig 11B-35)
3. Handrails shall extend a minimum of 12 inches beyond the top nosing and 12 inches plus the tread width beyond the bottom nosing and ends shall be returned or terminate in newel posts or safety terminals. (1133B.4.2.2, 1133B4.2.3, Fig 11B-35, 37)
4. The handgrip portion of handrails shall be not less than 1-1/4 inches or more than 1-1/2 inches in cross-sectional nominal dimension or the shape shall provide an equivalent gripping surface. The handgrip portion of handrails shall have a smooth surface with no sharp corners. Gripping surfaces (top or sides) shall be uninterrupted by newel posts, other construction elements, or obstructions. Any wall or other surface adjacent to the handrail shall be free of sharp or abrasive elements. Edges shall have a minimum radius of 1/8 inch.(1133B.4.2.6, Fig 11B-36)
5. The orientation of at least one handrail shall be in the direction of the run of the stair and perpendicular to the direction of the stair nosing, and shall not reduce the minimum required width of stairs. (1133B.4.2.4)
6. Handrails projecting from a wall shall have a space of 1-1/2 inches between the wall and the handrail. Handrails may be located in a recess if the recess is a maximum of 3 inch deep and extends at least 18 inches above the top of the rail. Handrails shall not rotate within their fitting. (1133B.4.2.5, Fig 11B-36)
7. The upper approach and the lower tread of each stair shall be marked by a strip of clearly contrasting color at least 2 inches wide placed parallel to and not more than one inch from the nose of the step or landing to alert the visually impaired. The strip shall be of material that is at least as slip resistant as the other treads of the stair. (1133B.4.4, Fig 11B-35)
8. Where stairways occur outside a building, the upper approach and all treads shall be marked by a strip of clearly contrasting color at least 2 inches wide and placed parallel to and not more than 1" from the nose of the step or landing to alert the visually impaired. The strip shall be of a material that is at least as slip-resistant as the other treads of the stair. A painted strip shall be acceptable. (1133B.4.4, Fig 11B-35)
9. All tread surfaces shall be slip-resistant. Weather exposed stairs and their approaches shall be designed so that water will not accumulate on walking surfaces. Treads shall have smooth, rounded, or chamfered exposed edges, and no abrupt edges at the nosing (lower front edge). (1133B.4.5.1, Fig 11B-35)
10. The nosing shall not project more than 1-1/2 inches past the face of the riser below. (1133B.4.5.2, Fig 11B-35)
11. Open risers are not permitted. On any given flight of stairs, all steps shall have uniform riser height and uniform tread widths consistent with 1133B.4. Stair treads shall be no less than 11 inches deep, measured from riser to riser. Risers shall be sloped or the underside of the nosing shall have an angle not less than 60 degrees from the horizontal. (1133B.4.5.3, Fig 11B-35)
12. Tactile floor designation signs that comply with Section 1117B.5.1 shall be located at each floor level landing in all enclosed stairways in buildings two or more stories in height to identify the floor level. At exit discharge level, the sign shall include a raised five-pointed star located to the left of the identifying floor level. The outside diameter of the star shall be the same as the height of the raised characters. (1133B.4.3)

N. Controls & Operating Mechanisms

1. Controls and operating mechanisms in accessible spaces, along accessible routes or as part of accessible elements and those in Section 109.1 are required to be accessible. (1117B.6.1)
2. Clear floor space complying with Section 1118B.4 that allows a forward or parallel approach by a person using a wheelchair shall be provided at controls, dispensers, receptacles, and other operable equipment. (1117B.6.2)
3. The highest and lowest operable part of all controls, dispensers, receptacles, and other operable equipment shall be placed within one of the reach ranges specified in Sections 1118B.5 and 1118B.6. Electrical and communication system receptacles on walls shall be mounted no less than 15 inches above the floor. (1117B.6.3)
4. Controls and operating mechanisms shall be operable with one hand and shall not require tight grasping, punching, or twisting of the wrist. To force required to activate controls shall be no greater than 5 pounds of force. (1117B.6.4)
5. For accessible lavatories, faucet controls and operating mechanisms shall be operable with one hand and shall not require grasping, pinching, or twisting of the wrist. The force required to active faucet controls and operating mechanisms shall be no greater than 5 lbf. Lever-operated, push-type, and electronically controlled mechanisms are examples of acceptable designs. Self-closing valves are allowed if the faucet remains open for at least 10 seconds. (1115B.4.3)

O. Space Allowance & Reach Ranges

1. The minimum clear floor or ground space required to accommodate a single, stationary wheelchair and occupant is 30 inches by 48 inches. The minimum clear floor or ground space for wheelchairs may be positioned for forward or parallel approach to an object. Clear floor or ground space for wheelchairs may be a part of the knee space required under some objects. (1117B.2.3, 1118B..4.1, Fig 11-B-5A)
2. One full unobstructed side of the clear floor or ground space for a wheelchair shall adjoin or overlap an accessible route or adjoin another wheelchair clear floor space. If a clear floor or ground space is located in an alcove or otherwise confined on all or part of three sides, additional maneuvering clearances shall be provided. (1117B.2.4, 1118B.4.2, Fig 11-B-5A)
3. The space required for a wheelchair to make a 180 degree turn is a clear space of 60" diameter or a T-shaped space.(1118B.3, Fig 11B-12(a) & (b))
4. The minimum clear width required for a wheelchair to turn around an obstruction shall be 36 inches where the obstruction is 48 inches or more in length and 42 inches and 48 inches where the obstruction is less than 48 inches in length. (Fig 11B-5E)
5. The minimum clear width for single wheelchair passage shall be 32 inches at a point and 36 inches continuously. (1118B.1, Fig 11B-10)
6. The minimum width for two wheelchairs to pass is 60 inches. (1118B.2, Fig 11B-11)
7. If the clear floor space only allows forward approach to an object, the maximum high forward reach allowed shall be 48 inches. See Figure 11B-~5C(a). The minimum low forward reach is 15 inches. If the high forward reach is over an obstruction, reach and clearances shall be as shown in Figure 11B-5C(b). (1118B.5)
8. If the clear floor space allows parallel approach by a person in a wheelchair, the maximum high side reach allowed shall be 54 inches and the low side reach shall be no less than 9 inches above the floor as shown in Figures I 1 B-5D(a) & (b). If the side reach is over and obstruction, the reach and clearances shall be as shown in Figure 11B-5D(c). (1118B.6)

BAYLEY CONSTRUCTION

Bayley Construction
3730 S. Susan St.
Suite 200
Santa Ana, CA, 92704
CA. License 734880
Tel 714-540-8863
Fax 714-556-8863

Bayley Construction
8005 S.E. 28th St.
P.O. Box 9004
Mercer Island, WA. 98040
WA. License BAYLECO034JC
Tel 206-621-8884
Fax 206-343-7728

Pacific Parking DESIGN

6 Venture, Suite 275 949.341.0066 t
Irvine, California 92618 949.341.0099 f

DLR Group WWCOT
Architecture Engineering Planning Interiors

4280 Latham Street, Suite H 951.682.0470 t
Riverside, California 92501 951.682.1801 f

LICENSED ARCHITECT SCOTT BRAYTON NEWMAN C-22700 EXP. 9-30-13 STATE OF CALIFORNIA

Public Agency Submittal: .
Issued for Bidding: .
Issued for Construction: .

Revisions:

A 09.15.2011 PERMIT SET

PHASE II:
FOX ENTERTAINMENT PLAZA:
PARKING GARAGE

3601 Market Street,
Riverside, CA 92501

CITY of RIVERSIDE

CITY OF RIVERSIDE

3900 Main Street, Riverside, CA 92522

Phase: .
Revised .
PPD Project № 10-101

DISABLED ACCESS NOTES

Issued Date: 05.02.2011
Drawn By: RTR
Checked By: SBH

PA-0.6

Sheet №

R. Signs & Identification

California's standards for signage are more stringent and are significantly larger and wider than Federal law, Americans with Disabilities Act (ADA) Section 4.30. (1117B.5)
The International Symbol of Accessibility shall be the standard used to identify facilities that are accessible to and usable by physically disabled persons as set forth in Title 24 and as specifically required in this Section. (1117B.5.8.1, Fig 11B-6)

1. The International Symbol of Accessibility shall consist of a white figure on a blue background. The blue shall be equal to Color No. 15090 in Federal Standard 595B. (1117B5.8.1.1)

2. All building and facility entrances that are accessible to and usable by persons with disabilities and at every major junction along or leading to an accessible route of travel shall be identified with a sign displaying the International Symbol of Accessibility and with additional directional signs, as required, to be visible to persons along approaching circulation paths. (1117B.5.8.1.2. & 1127B.3)

3. When permanent identification is provided for rooms and spaces of a building or site, raised letters shall be provided and shall be accompanied by Braille in conformance with Section 1117B.5.2 through 1117B.5.7. Signs shall be installed on the wall adjacent to the latch outside of the door. Where there is no wall space on the latch side, including at double leaf doors, signs shall be placed on the nearest adjacent wall, preferably on the right. Mounting height shall be 60 inches above the finished floor to the centerline of the sign. Mounting location shall be determined so that a person may approach within 3inches of signage without encountering protruding objects or standing within the swing of a door. (1117B.5.1, 1117B.5.7)

4. When signs direct to or give information about permanent rooms and functional spaces of a building or site, they shall comply with Sections 1117B.5.2, 1117B.5.3, 1117B.5.4. Means of egress signs and identification for visual exit signs, graphics, illumination, power source, tactile exit signage, tactile stair level identification and special egress control devices shall comply with Sections 1003.2.8.1, 1003.2.8.5, 1003.2.9, 1003.2.10 and 1003.3.1.10. (1117B.5.1.2)

5. When raised characters or when pictogram symbols are used, they shall conform to the following: (1117B.5.5)
   a) Characters on signs shall be raised or recessed 1/32 inch minimum and shall be sans - serif uppercase characters accompanied by Grade 2 Braille complying with section 1117B.5.6. (1117B.5.5.1)
   b) Raised characters or symbols shall be a minimum of 5/8 inch high and a maximum of 2 inches high. (1117B.5.5.2)
   c) Pictorial symbol signs (pictograms) shall be accompanied by the verbal description placed directly below the pictogram. The outside dimension of the pictogram field shall be a minimum of 6 inches in height. (1117B.5.5.3)
   d) Characters and Braille shall be in a horizontal format. Braille should be placed a minimum of 3/8-inch and a maximum of ½-inch directly below the tactile characters; flush left or centered. When tactile sign is multi-lined, all Braille shall be placed together below all lines of tactile text. (1117B.5.5.4)

6. Characters on signs shall have a width-to-height ratio of between 3:5 and 1:1 and a stroke width-to-height ratio between 1:5 and 1:10. (1117B.5.3)

7. Characters, symbols and their background shall have a non-glare finish. Characters and symbols shall contrast with their background, either light characters on a dark background or dark characters on a light background. (1117B.5.2)

8. Characters and numbers on signs shall be sized according to the viewing distance from which they are to be read. The minimum height is measured using an upper case "X". Lower case characters are permitted. For signs suspended or projected above the finish floor in compliance with Section 1133B.6.6, the minimum character height shall be 3 inches. (1117B.5.4)

9. Contracted Grade 2 Braille shall be used wherever Braille is required in other portions of these Standards. Dots shall be 1/10 inch on centers in each cell with 2/10-inch space between cells. Dots shall be raised a minimum of 1/40 inch above the background. (1117B.5.6)

10. Pole supported pedestrian traffic control buttons shall be identified with color coding consisting of a textured horizontal yellow band 2 inches in width encircling the pole, and a 1 inch wide dark border band above and below this yellow band. Color-coding should be placed immediately above the control button. Control buttons shall be located no higher than 48 inches above the surface adjacent to the pole. (1117B.5.9)

S. Electrical

1. The highest operable part of all controls, dispensers, receptacles and other operable equipment shall be shall be installed at an accessible location meeting the clearances and reach range requirements of Section 1118B.5 and 1118B.6 and not less than 15" above the floor or working platforms. (1117B.6.3)

2. The center of the grip of the operating handle of controls or switches intended to be used by the occupant of the room or area to control lighting and receptacle outlets, appliances, or cooling, heating, and ventilating equipment shall be 48" above the floor or working platform. (1117B.6, 5.1)

3. The center of electrical receptacle outlets on branch circuits of 30 amperes or less shall be installed not more than 48 inches nor less than 14 inches above the floor or working platform. (1117B.6.5.2)

T. Notification Appliances for the Hearing Impaired

NOTE: If emergency warning systems are provided, they shall include both audible alarms and visual alarms complying with NFPA 72 and Chapter 9, Sections 907.9.1 and 907.9.2. (1114B.2)

1. Approved notification appliances for the hearing and visually impaired shall be installed in accordance with the provisions of NFPA 72 in the following areas:
   a) Restrooms
   b) Corridors
   c) Music practice rooms
   d) Band rooms
   e) Gymnasiums
   f) Multipurpose rooms
   g) Occupational shops
   h) Occupied rooms where ambient noise impairs hearing of the fire alarm
   i) Lobbies
   j) Meeting rooms
   k) Any other area for common use

2. Strobe signaling devices required for the hearing impaired shall be State Fire Marshall approved and listed.

3. Notification appliances for the hearing impaired shall also be provided with the following:

   a) Audible signals intended for operation in the public mode should have a sound level of not less than 75dba at 10' of more than 110dba at the minimum hearing distance from the audible appliance.
   b) Audible signals intended for operation in the private mode should have a sound level of not less than 45dba at 10' of more than 110dba at the minimum hearing distance from the audible appliance.
   c) A specification value not to exceed 3 flashes per second and not slower than 1 flash per second.
   d) A clear nominal white colored light source.
   e) Placement as low as possible, but no lower than a minimum of 80" (2 meters) above the floor and a minimum of 6" (0.15 meter) below the ceiling.
   f) Notification appliances for occupancies required to comply with the Americans with Disabilities Act (ADA) shall comply with the following:
      1) A pulsing light source of not less than 75 candelas shall be provided.
      2) No place in any room or space required to have a visual signal appliance shall be more than 50' (15 meters) from the signal (in the horizontal plane). In large rooms and spaces exceeding 100' (30 meters) across, without obstructions 6' (2 meters) above the finished floor, such as auditoriums, devices nay be placed around the perimeter, spaced a maximum 100' (30 meters) apart, in lieu of suspending appliances from the ceiling.
      3) No place in common corridors or hallways in which visual alarm signaling appliances are required shall be more than 50' (15 meters) from the signal.

V. Cleaner Air Symbol

1. Strictly for publicly funded facilities or any facilities leased or rented by State of California, not concessionaries. This symbol shall be the standard used to identify a room, facility and paths of travel that are accessible to and usable by people who are adversely impacted by airborne chemicals or particulate(s) and/or the use of electrical fixtures and/or devices. When used, the symbol shall comply Sections 1117B.5.11.1, 1117B.5.11.2, and 1117B.5.11.3 (1117B.5.11, Fig 11B-40)

W. Elevators

NOTE: In buildings two or more stories in height, served by an elevator, or a building served by an elevator required by Chapter 11A or 11B or a building served by an elevator required for accessibility by Section 101.17, all elevators provided shall accommodate a wheelchair. (1116B.1.1)

1. In buildings two or more stories in height, served by an elevator, or a building served by an elevator required by chapter 11B, or a building served by an elevator required for accessibility by Section 109.1, if more than one passenger elevator is required, each full passenger elevator shall comply with this chapter. The following exceptions may be exercised if applicable to your project.

   a) In existing buildings, when the enforcing agency determines that compliance with any regulation under this section would create an unreasonable hardship, an exception to such regulation shall be granted when equivalent facilitation is provided.

   b) In existing buildings, where existing shaft configuration or technical infeasibility prohibits strict compliance with Section 1116B.1.8, the minimum car plan dimensions may be reduced by the minimum amount necessary, but in no case shall the inside car area be smaller than 48 inches by 48 inches.

   c) In existing buildings, equivalent facilitation may be provided with an elevator car of different dimensions where it can be demonstrated that a person using a wheelchair can enter and operate the elevator and when all other elements required to be accessible comply with the applicable provisions of Section 1116B.

   d) These provisions shall not apply to existing buildings when legal or physical constraints will not allow compliance with these regulations or equivalent facilitation without creating an unreasonable hardship. See section 109.1

2. Passenger elevators shall be located on a major accessible route and provisions shall be made to assure that they remain accessible and usable at all times the building is occupied. (1124A.2, 1116B.1.15).

3. The car inside shall allow for the turning of a wheelchair. The minimum clear distance between walls or between wall and door, excluding return panels, shall be not less than 80" by 54" for center-opening doors, and 68" by 54" for side-slide opening doors. Minimum distance from wall to return panel shall be not less than 51". (1124A.3.2, 1116B.1.8, Fig 11-7A & Fig 11B-40A)

4. Minimum clear width for elevator doors shall be 36". (1124A.3.2.1, 1116 B.1.4, Fig 11A-7A & Fig 11B-40A).

5. Provide the following note(s) or detail(s) on the plans:

   a) A handrail shall be provided on one wall of the car, preferably the rear. The rails shall be smooth and the inside surface at least 1-1/2" clear of the walls at a nominal height between 31" and 33" above the floor. 32" is required to reduce interference with car controls where the lowest button is centered at 35" from floor. (1116B.1.11, Fig 11A-7B & Fig 11B-40B)

   b) The centerline of elevator floor buttons shall be no higher than 54" above the finish floor for side approach and 48' for front approach. Where possible a 48 inch maximum height for elevator floor buttons is preferred. (1124A.3.3.1, 1116B.1.8, Fig. 11A-7B & Fig 11B-40B).

   c) Floor buttons shall be provided with visual indications to show when each call is registered. The visual indicators shall be extinguished when each call is answered. (1124A.3.3.1, 1116B.1.8, Fig 11A-7B & Fig 11B-40B).

   d) Except for photo electric tube by-pass switches, emergency controls, including the emergency stop and alarm, shall be grouped in or adjacent to the bottom of the panel and shall be no lower than 2'-11" from the floor. For multiple controls only, one set must comply with these height requirements. (1124A.3.3.1, 1116B.1.8, Fig 11A-7B & Fig 11B-40B)

   e) The centerline of the hall call buttons shall be no higher than 3'-6" of the floor. The buttons shall be a minimum of 3/4" in size and shall be raised 1/8" + 1/32" above the surrounding surface. Visual indication shall be provided to show each call registered and extinguished when answered. Objects adjacent to and below hall call buttons shall not project more than 4" from the wall. (1124A.4, 1116B.1.10, Fig 11A-7C & Fig 11B-40C).

   f) The emergency telephone handset shall be positioned no higher than 4' above the floor, and the handset cord shall be a minimum of 2'-5" in length. (1124A.3.4, 1116B.1.8)

6. Provide the following note(s) on the plans:

7. If the telephone system is located in a closed compartment, the compartment door hardware shall be of the lever type, conforming to the provisions of Section 1008.1.8, type of lock or latch. Emergency intercommunication shall not require voice communication. (1124A.3.4, 1116B.1.8)

8. A car position indicator shall be provided above the car control panel or over the door to show the position of the elevator in the hoist way. As the car passes or stops at a floor served by the elevators, the corresponding numerals shall illuminate, and an audible signal shall sound. (1116B.1.9)

9. Numerals shall be a minimum of 1/2" in height. (1116B.1.9).

10. An audible verbal announcement or signal shall sound to tell passengers that the car is stopping or passing a floor served by the elevator. The audible signal shall be no less than 20 decibels with a frequency no higher than 1500 Hz. (1116B.1.9).

11. The minimum illumination at the car controls, threshold, and the landing when the car and landing doors are open shall not be less than 5 foot-candles. (1124A.5, 1116B.1.12).

12. Identification for the visually impaired shall be as follows: (1124A.3.3.2, 1116B.1.9, Fig 11A-7B & Fig 11B-40B).

   a) Passenger elevator car controls shall have a minimum dimension of 3/4" and shall be raised 1/8" + 1/32" above the surrounding surface.

   b) Control buttons shall be illuminated, shall have square shoulders, and shall be activated by a mechanical motion that is detectable.

   c) All control buttons shall be designated by a 5/8" minimum, Arabic numeral, standard alphabet character, or standard symbol immediately to the left of the control button.

   d) A Braille symbol shall be located immediately below the numeral, character, or symbol.

   e) A minimum clear space of 3/8" or other suitable means of separation shall be provided between rows of control buttons.

   f) The raised character shall be white on a black background.

   g) Controls and emergency equipment identified by raised symbols shall include, but not be limited to, "door open"," door close", "alarm bell", "emergency stop", and" telephone".

   h) The call button for the main entry floor shall be designated by a raised star at the left of the floor designation.

   i) A visual and audible signal shall be provided at each hoist way entrance indicating to the prospective passenger the car answering the call and its direction of travel as follows: (1124A.6, 1116B.1.13)

   i) The visual signal for each direction shall be a minimum of 2-1/2" high by 2-1/2" wide, and visible from the proximity of the hall call button.

      ii) The audible signal shall sound once for the "up" direction and twice for the "down" direction or of a configuration which distinguishes between up and down elevator travel.

      iii) The center line of the fixture shall be located a minimum of 6' in height from the lobby floor.

      iv) The use of in-car lanterns, located in or on the car door jambs, visible from the proximity of the hall call button and conforming to Sections. 1124A.6 or 1116B.1.13 will be acceptable. (1110A.6, 1116B.1.13).

   j) The use of arrow shapes is preferred for visible signals. (1124A.6, 1116B.1.13).

   k) Passenger elevator landing jambs on all elevator floors shall have the number of the floor on which the jamb is located designated by raised characters that are a minimum of 2" in height and conform to section 1117B.5.5 and grade 2 Braille that conforms to section 1117.5.6, located 60" on center' above the floor on the jamb panels on both sides of the door so that they are visible from within the elevator. On the grade level, a raised five-pointed star shall be placed to the left of the raised character. The outside diameter of the star shall be 2 inches. Braille shall be placed below the corresponding raised characters. (1124A.8, 1116B.1.14)

   l) Power-operated horizontally sliding car and hoist way doors opened and closed by automatic means shall be provided. (1116B.1.3)

   m) Doors closed by automatic means shall be provided with a door reopening device which will function to stop and reopen a car door and adjacent hoist way door in case the car door is obstructed while closing. This reopening device shall also be capable of sensing an object or person in the path of the closing door without requiring contact for activation at a normal 5" and 29" above the floor. Door reopening devices shall remain effective for a period of not less than 20 seconds. After such an interval the doors may close in accordance with the requirements of ANSI 17.1-86 of the American Society of Mechanical Engineers. (ASME) document ASME 17.1-1990. (1124A.9, 1116B.1.5, Fig 11A-7B & Fig. 11B-40B).

   n) The minimum acceptable time from notification that a car is answering a call (lantern and audible signal) until the doors of the car start to close shall be calculated in accordance with Sections 1124A.7.1 and 1116B.1.6. (1124A.7.1, 1116B.1.6. Fig 11A-7C & Fig 11B-40C).

   o) For cars with in-car lanterns, the total time, T, as calculated in accordance with Section 1116B.1.6, begins when the lantern is visible from the vicinity of hall call buttons and an audible signal is sounded. (1124A.7.1, 1116B.1.6, Fig. 11A-7C & Fig. 11B-40C).

   p) The minimum acceptable time for doors to remain fully open shall not be less than 5 seconds. (1124A.7.2, 1116B.1.7).

   q) The elevator shall be automatic and be provided with a self-leveling feature that will automatically bring the car to the floor landings with a tolerance of + 1/2" under normal loading and unloading conditions. This self-leveling shall, within its zone, be entirely automatic and independent of the operating device and shall correct the over-travel or under-travel. The car shall also be maintained approximately level with the landing irrespective of load. The clearance between the car platform sill and the edge of the hoist way landing shall be no greater than 1-1/4". (1124A.10, 1116B.1.2)

Z. Sanitary Facilities

1. Doorways leading to men's sanitary facilities shall be identified by an equilateral triangle 1/4" thick with edges 12" long and a vertex pointing upward. Women's sanitary facilities shall be identified by a circle 1/4" thick and 12" in diameter.

2. Unisex sanitary facilities shall be identified by a circle 1/4" thick, 12" in diameter, with a triangle superimposed on the circle and within the 12" diameter.

3. Geometric (circle & triangle) symbols on sanitary facility doors shall be centered on the door at a height of 60" and their color and contrast shall be distinctly different from the color and contrast of the door.

4. There shall be sufficient space in the toilet room for a wheelchair measuring 30" wide by 48" long to enter the room and permit the door to close.

5. There shall be in the room a clear floor space of at least 60" in diameter, or a t-shaped space complying with figures 11B-12(A) of (B). No door shall encroach into this space.

6. The water closet shall be located in a space, which provides a minimum 28" wide clear space from a wall at one side. The other side shall provide 18" from the centerline of the water closet to the wall. A minimum 48" clear space shall be provided in front of the water closet.

7. The height of accessible water closets shall be a minimum of 17" and a maximum of 19" measured to the top of a maximum 2" high toilet seat, except that 3" seats shall be permitted only in alterations where the existing fixture is less than 15" high.

8. A clear floor space 30" x 48" shall be provided in front of a lavatory to allow a forward approach. Such clear floor space shall adjoin or overlap an accessible route and shall extend into knee and toe space underneath the lavatory.

9. Lavatories when located adjacent to a sidewall or partition shall be mounted a minimum of 18" to the centerline of the fixture. All lavatories that are designated to be accessible shall be mounted with the rim or counter edge

10. No higher than 34" above the finished floor and with a vertical clearance measured from the bottom of the apron or outside bottom edge of the lavatory of 29", reducing to 27" at a point located 8" back from the front edge. Knee clearance below the lavatory shall extend a minimum of 30" in width by 17" in depth. Toe clearance shall be the same width and shall be a minimum of 9" high from the floor and a minimum of 17" deep from the front of the lavatory.

11. Hot water and drainpipes accessible under lavatories shall be insulated or otherwise covered. There shall be no sharp or abrasive surfaces under lavatories.

12. Controls for water closet flush valves shall be mounted on the wide side of toilet areas.

13. Water closet flush valve controls, and faucet and operating mechanism controls, shall be operable with one hand, shall not require tight grasping, pinching, or twisting of the wrist, and shall be mounted no more than 44" above the floor.

14. The force required to activate water closet flush valve controls, and faucet and operating mechanism controls, shall be no greater than 5 lbf. Electronic or automatic flushing controls are acceptable and preferable.

15. Self-closing faucet control valves are allowed if the faucet remains open for at least 10 seconds.

16. Mirrors shall be mounted with the bottom edge no higher than 40" from the floor.

17. Where towel, sanitary napkins, water receptacles, and other similar dispensing and disposal fixtures are provided, at least one of each type shall be located with all operable parts, including coin slots, within 40" from the finished floor.

18. Toilet tissue dispensers shall be located on the wall within 12" of the front edge of the toilet seat and no lower than 19" from the floor. Dispensers that control delivery or that do not permit continuous paper flow shall not be used.

19. Toilet room floors shall have a smooth, hard, non-absorbent surface such as portland cement, concrete, ceramic tile or other approved material which extends upward onto the walls at least 5". Walls within water closet compartments and walls within 24" of the front and sides of urinals shall be similarly finished to a height of 48" and, except for structural elements; the materials used in such walls shall be a type which is not adversely affected by moisture.

20. Grab bars at the side shall be at least 42" long with the front end positioned 24" in front of the water closet stool and with the back end positioned no more than 12" from the rear wall. Grab bars at the back shall be not less than 36" long.

21. Grab bars shall be securely attached 33" above and parallel to the floor, except that where a tank type toilet is used which obstructs placement at 33", the grab bar may be as high as 36".

22. The diameter or width of the gripping surfaces of a grab bar shall be 1-1/4" to 1-1/2" or the shape shall provide an equivalent gripping surface. If grab bars are mounted adjacent to a wall, the space between the wall and the grab bars shall be 1-1/2".

23. The structural strength of grab bars, tub and shower seats, fasteners, and mounting devices shall meet the following specifications.

   a) Bending stress in a grab bar or seat induced by the maximum bending moment from the application of a 250-lb point load shall be less than the allowable stress for the material of the grab bar or seat.
   b) Shear stress induced in a grab bar or seat by the application of a 250-lb point load shall be less than the allowable shear stress for the material of the grab bar or seat, and its mounting bracket or other support is considered to be fully restrained, then direct and torsional shear stresses shall not exceed the allowable shear stress.
   c) Shear force induced in fastener or mounting devices from the application of a 250-lb point load shall be less than the allowable lateral load of either the fastener or mounting device or the supporting structure, whichever has the smaller allowable load.
   d) Tensile force induced in a fastener by a direct tension force of a 250-lb point load, plus the maximum moment from the application of a 250-lb point load, shall be less than the allowable withdrawal load between the fastener and supporting structure.
   e) Grab bars shall not rotate within their fittings.

24. A grab bar and any wall or other surface adjacent to it shall be free of any sharp or abrasive elements. Edges shall have a minimum radius of 1/8".

25. All doors, fixtures and controls shall be on an accessible route with a minimum clear width of 36" except at doors. If a person in a wheelchair must make a turn around an obstruction, the minimum clear width of the accessible route shall be as shown in figure 11B-5E.

Bayley Construction
3730 S. Susan St.
Suite 200
Santa Ana, CA, 92704
CA. License 734880
Tel 714-540-8863
Fax 714-556-8863

Bayley Construction
8005 S.E. 28th St.
P.O. Box 9004
Mercer Island, WA. 98040
WA. License BAYLECO334JC
Tel 206-621-8884
Fax 206-343-7728

BAYLEY CONSTRUCTION

Pacific Parking DESIGN

6 Venture, Suite 275 949.341.0066 t
Irvine, California 92618 949.341.0099 f

DLR Group WWCOT
Architecture Engineering Planning Interiors

4280 Latham Street, Suite H 951.682.0470 t
Riverside, California 92501 951.682.1801 f

LICENSED ARCHITECT SCOTT BRAYTON NEWMAN C-22700 EXP. 9-30-13 STATE OF CALIFORNIA

Public Agency Submittal: .
Issued for Bidding: .
Issued for Construction: .

Revisions:

A 09.15.2011 PERMIT SET

PHASE II:
FOX
ENTERTAINMENT
PLAZA:
PARKING GARAGE

3601 Market Street,
Riverside, CA 92501

CITY of RIVERSIDE

CITY OF RIVERSIDE

3900 Main Street, Riverside, CA 92522

Phase: .
Revised .
PPD Project № 10-101

DISABLED ACCESS NOTES

Issued Date: 05.02.2011
Drawn By: RTR
Checked By: SBH

PA-0.7

Sheet №

1 PA-1.1 COMPOSITE SITE PLAN (FOR REFERENCE)

1" = 20'-0"

NARRATIVE SCOPE OF WORK

PARKING GARAGE PERMIT PACKAGE

INCLUDING GROUND LEVEL STORAGE AND RESTAURANT SPACE

PROJECT DESCRIPTION

THE FOX ENTERTAINMENT PLAZA consists of a freestanding two-story EXHIBIT HALL / BLACK BOX building and a freestanding four-level OPEN PARKING GARAGE (with ground level storage and restaurant space). The entire project is considered as portions of one building per CBC Sec. 503.1.2 and as such the type of construction for the aggregate building and the area and height allowances are determined under that methodology. [see sheet B-G003 for the allowable building height and area tabulation and the aggregate area totals and building height tabulations for the buildings] the project shall be designed as separated occupancies per CBC Sec. 508.4 and occupancies will be separated per CBC Sec. 508.4.4.

The two freestanding buildings will be permitted separately even though they are considered as portions of one building. See sheets PA-0.0 and PA-0.1 for code specific occupant and exiting information regarding the parking structure building and sheet B-G003 for code specific occupant and exiting information regarding the exhibit hall / black box building.

The PARKING GARAGE PERMIT PACKAGE consists a the free standing three-story building with an occupied roof (four parking levels) 395 car open parking garage with ground level moderate hazard storage and "shell only" restaurant space.

The project is designed as a cast-in-place long span concrete-framed structure.

Floor framing consists of cast-in-place post-tensioned beams and/or girders and cast-in-place post-tensioned concrete slabs.

Gravity loads are carried by cast-in-place concrete columns.

Seismic loads are resisted by concrete moment frames.

The structure will be generally supported on spread or continuous footings.

OCCUPANCY GROUPS

Occupancy group per the California Building Code are:

"S-2" open parking as defined in Section 311.3 & 406.3.

"S-1" moderate hazard storage as defined in Section 311.2.

"A-2" assembly uses intended for food and/or drink consumption as defined in Section 303.1.

OCCUPANCY LOAD

Total Occupant Load for Parking Areas: 720 occupants

Maximum Design Occupant Load at Level P-4 is: 202 occupants

Total Occupant Load for Storage Area: 9 occupants

Total Occupant Load for Restaurant Area: 800 occupants *

* Based on gross area at 15 sq.ft. per occupant and does not factor in kitchen, storage or service areas. Actual occupant load will be less.

USES of BUILDING

"S-2" - Parking of private vehicles

"S-1" - Moderate Hazard Storage Area [Completed theatre sets, furniture, lumber, building materials for set construction etc. (excluding paints, solvents or similar products)]

"A-2" - Future Restaurant Space

TYPE of CONSTRUCTION

The Construction is to be Type IIB - Sprinklered

AREA of BUILDING

The total area of the parking garage building (including ground level storage and restaurant spaces): 158,387 sq.ft.

HEIGHT of BUILDING

The Height of the Parking Garage Building is:

45'-2" measured to the top of concrete spandrel at Level P-4.

45'-10" measured to the top of the facade.

56'-0" measured to the top of the elevator hoistway roof.

CODE REQUIREMENTS

This parking garage shall comply with the:

- California Administrative Code (CAC) Title 24
- 2010 California Building Code (2009 IBC)
- 2010 California Mechanical Code (2009 UMC)
- 2010 California Plumbing Code (2009 UPC)
- 2010 California Electrical Code (2008 NEC)
- 2010 California Fire Code (2009 IFC)
- 2010 California Green Building Standards Code (CALGREEN)
- Americans with Disabilities Act Accessibility Guidelines for Buildings and Facilities 2004 (ADAAG)
- Ordinances, requirements, and building codes as amended by the City of Riverside, the County of Riverside, and the State of California.

SITE BACKGROUND INFORMATION IS FOR REFERENCE ONLY

SEE RICK ENGINEERING DRAWINGS FOR ACCURATE & CURRENT SITE INFORMATION

PROJECT NORTH

Bayley Construction
3730 S. Susan St.
Suite 200
Santa Ana, CA. 92704
CA. License 734880
Tel 714-540-8863
Fax 714-556-8863

Bayley Construction
8005 S.E. 28th St.
P.O. Box 9004
Mercer Island, WA. 98040
WA. License BAYLEC0343JC
Tel 206-621-8884
Fax 206-343-7728

BAYLEY CONSTRUCTION

Pacific Parking DESIGN
6 Venture, Suite 275 949.341.0066 t
Irvine, California 92618 949.341.0099 f

DLR Group WWCOT
Architecture Engineering Planning Interiors
4280 Latham Street, Suite H 951.682.0470 t
Riverside, California 92501 951.682.1801 f

LICENSED ARCHITECT SCOTT BRAYTON BERMAN C-22700 EXP. 9-30-13 STATE OF CALIFORNIA

Public Agency Submittal:
Issued for Bidding:
Issued for Construction:

Revisions:

A 09.15.2011 PERMIT SET

PHASE II: FOX ENTERTAINMENT PLAZA: PARKING GARAGE

3601 Market Street
Riverside, CA 92501

CITY of RIVERSIDE

CITY OF RIVERSIDE

3900 Main Street, Riverside, CA 92522

Phase:
Revised 04.19.2011
PPD Project № 10-101

COMPOSITE SITE PLAN (FOR REFERENCE)

Issued Date: 05.02.2011
Drawn By: RTR
Checked By: SBH

PA-1.1

Sheet №

File Path & Name: C:\Dimension Z\PPD\Projects\2009 - Fox Plaza Parking Structure (Bayley)\Fox PPD Revit\PPD Fox Theater Parking Garage_Owner.rvt
© WWCOT 2009 -- Plotted 9/13/2011 9:38:44 AM

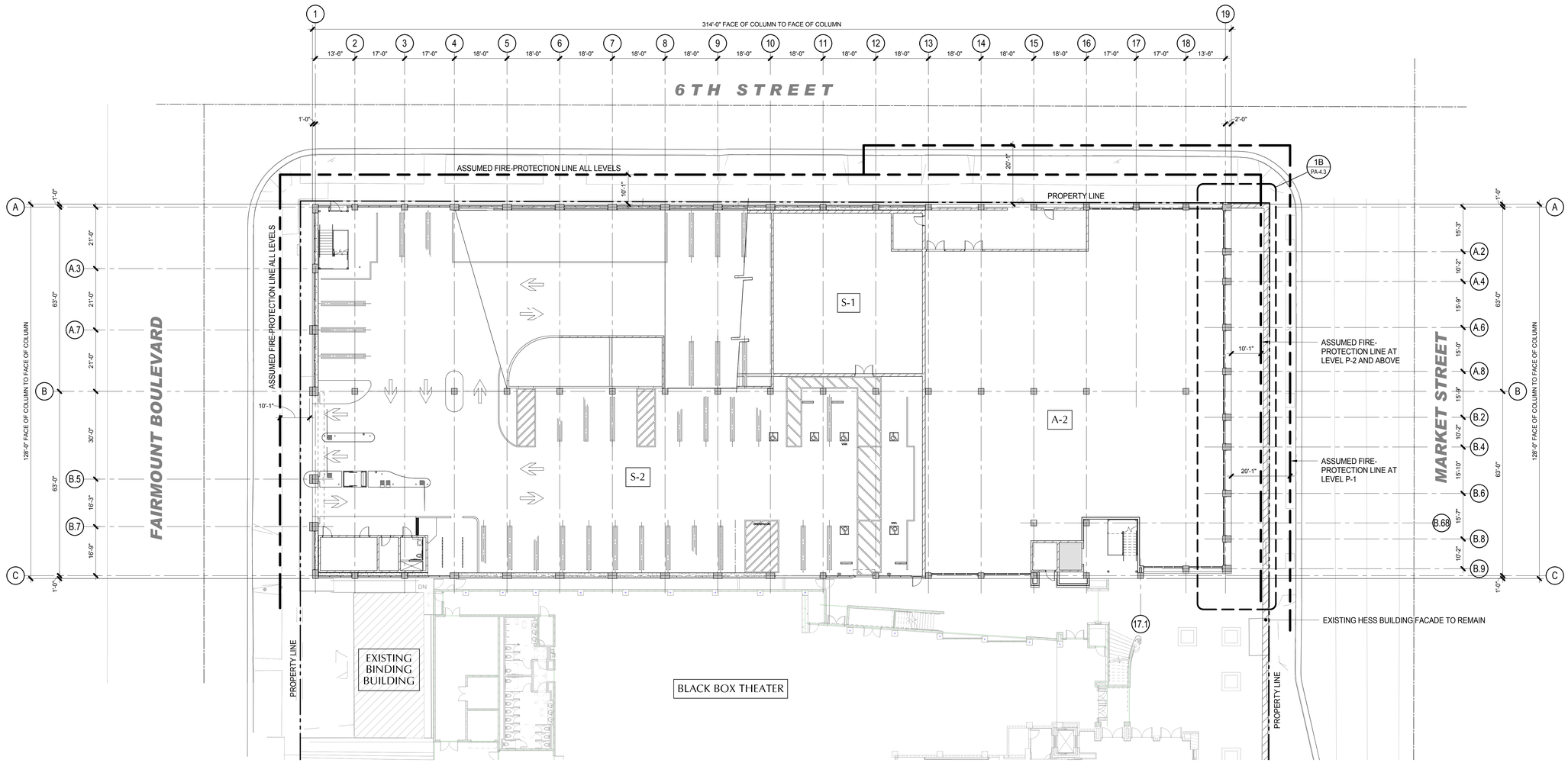

VERTICAL CLEARANCE

THE VERTICAL DIMENSION FROM THE FINISH FLOOR TO THE UNDERSIDE OF ANY STRUCTURAL ELEMENT, PIPING, ELECTRICAL FIXTURE ETC. SHALL BE:

8'-2" MINIMUM IN PARKING STALL AREAS AND 8'-2" MINIMUM AT DRIVE AISLES - ALL LEVELS

AT EACH VEHICULAR ENTRANCE: PROVIDE DISABLED ACCESS AUTHORIZATION SIGNS.

SITE BACKGROUND INFORMATION IS FOR REFERENCE ONLY

SEE RICK ENGINEERING DRAWINGS FOR ACCURATE & CURRENT SITE INFORMATION

WHERE THE PATH OF TRAVEL CROSSES THE VEHICULAR WAY AND WHERE THE WALKING SURFACES ARE NOT SEPARATED BY CURBS, RAILINGS OR OTHER ELEMENTS BETWEEN PEDESTRIAN AREAS AND VEHICULAR AREAS, THE BOUNDARY BETWEEN THE AREAS SHALL BE DEFINED BY A CONTINUOUS STATE OF CALIFORNIA APPROVED DETECTABLE WARNING.

SIDEWALKS ARE TO BE ACCESSIBLE ROUTES OF TRAVEL THAT ARE CONTINUOUSLY ACCESSIBLE. THE SIDEWALKS SHALL COMPLY WITH THE REQUIREMENTS OF C.B.C. SECT. 1133B.7

THE SIDEWALKS SHALL BE SET LEVEL WITH THE PARKING STRUCTURE FLOOR SLAB AND SHALL HAVE A MAXIMUM SLOPE IN THE DIRECTION OF TRAVEL OF 5%, WITH A MAXIMUM SURFACE CROSS SLOPE OF 1/4" PER FOOT. THE MAXIMUM CHANGE IN ELEVATION ALONG THE SIDEWALK AND FROM THE PARKING STRUCTURE SHALL BE 1/2".

PROVIDE A 5" X 5" SYMBOL OF ACCESSIBILITY AT ALL PRIMARY BUILDING ENTRANCES, PER C.B.C. 1117B.

FIRE RESISTIVE RATING REQUIREMENTS FOR EXTERIOR WALLS

BASED ON FIRE SEPARATION DISTANCE

S-2 OPEN PARKING GARAGE OCCUPANCY

TABLE 602 FOOTNOTE (d) STIPULATES THAT WHEN THE SEPARATION DISTANCE IS BETWEEN 10 FEET AND 30 FEET "OPEN PARKING GARAGES COMPLYING WITH SECTION 406 SHALL NOT BE REQUIRED TO HAVE A FIRE RESISTIVE RATING".

TABLE 705.8 FOOTNOTE (g) PROVIDES THAT "THE AREA OF OPENINGS IN AN OPEN PARKING STRUCTURE WITH A FIRE SEPARATION DISTANCE OF GREATER THAN 10 FEET SHALL NOT BE LIMITED".

THEREFORE THE IMAGINARY LINE (FIRE SEPARATION LINE) IS SET AT 10'-1" AROUND THE THREE SIDES OF THE PARKING GARAGE FRONTING THE PUBLIC RIGHT OF WAY BECAUSE AT THIS DISTANCE THE CODE ALLOWS FOR UNLIMITED UNPROTECTED OPENINGS AND EXTERIOR WALLS ARE NOT REQUIRED TO BE FIRE RATED.

NOTE: THIS ALSO APPLIES TO THE UPPER LEVELS OF THE PARKING GARAGE OVER THE ASSEMBLY OCCUPANCY ON THE GROUND FLOOR

THE EXTERIOR WALLS OF THE PARKING GARAGE THAT ARE LOCATED ADJACENT TO THE EXHIBIT HALL / BLACK BOX ARE NOT REQUIRED TO BE RATED AS FOR SPRINKLERED BUILDINGS THERE IS NO OCCUPANCY SEPARATION REQUIRED BETWEEN THE S-2 AND A-2 OCCUPANCIES [CBC Sec. Table 508.4] ANY B OCCUPANCIES IN THE EXHIBIT HALL / BLACK BOX ARE PROTECTED WITH A 1 HOUR RATED WALL WHICH PROVIDES THE OCCUPANCY SEPARATION BETWEEN THE S-2 AND B OCCUPANCIES.

A-2 ASSEMBLY OCCUPANCY

TABLE 602 PROVIDES THAT WHEN THE SEPARATION DISTANCE IS BETWEEN 10 FEET AND 30 FEET FOR A-2 OCCUPANCIES THAT ARE OF TYPE IIB A FIRE RESISTIVE RATING IS NOT REQUIRED.

TABLE 705.8 PROVIDES THAT WHEN THE SEPARATION DISTANCE IS GREATER THAN 20 FEET THE AREA OF UNPROTECTED OPENINGS SHALL NOT BE LIMITED FOR SPRINKLERED BUILDINGS.

THEREFORE THE IMAGINARY LINE (FIRE SEPARATION LINE) IS SET AT 20'-1" AROUND THE TWO SIDES OF THE A-2 ASSEMBLY OCCUPANCY FRONTING THE PUBLIC RIGHT OF WAY BECAUSE AT THIS DISTANCE THE CODE ALLOWS FOR UNLIMITED UNPROTECTED OPENINGS AND EXTERIOR WALLS ARE NOT REQUIRED TO BE FIRE RATED.

THE EXTERIOR WALLS OF THE A-2 OCCUPANCY IN THE PARKING BUILDING THAT ARE LOCATED ADJACENT TO THE EXHIBIT HALL / BLACK BOX ARE NOT REQUIRED TO BE RATED AS FOR SPRINKLERED BUILDINGS THERE IS NO OCCUPANCY SEPARATION REQUIRED BETWEEN A OCCUPANCIES [CBC Sec. Table 508.4] ANY B OCCUPANCIES IN THE EXHIBIT HALL / BLACK BOX ARE PROTECTED WITH A 1 HOUR RATED WALL WHICH PROVIDES THE OCCUPANCY SEPARATION BETWEEN THE S-2 AND B OCCUPANCIES.

S-1 STORAGE OCCUPANCY

TABLE 602 PROVIDES THAT WHEN THE SEPARATION DISTANCE IS BETWEEN 10 FEET AND 30 FEET FOR S-1 OCCUPANCIES THAT ARE OF TYPE IIB A FIRE RESISTIVE RATING IS NOT REQUIRED.

TABLE 705.8 PROVIDES THAT WHEN THE SEPARATION DISTANCE IS GREATER THAN 20 FEET THE AREA OF UNPROTECTED OPENINGS SHALL NOT BE LIMITED FOR SPRINKLERED BUILDINGS.

THEREFORE THE IMAGINARY LINE (FIRE SEPARATION LINE) IS SET AT 10'-1" AROUND THE TWO SIDES OF THE A-2 ASSEMBLY OCCUPANCY FRONTING THE PUBLIC RIGHT OF WAY BECAUSE AT THIS DISTANCE THE CODE ALLOWS THAT EXTERIOR WALLS ARE NOT REQUIRED TO BE FIRE RATED. THERE ARE NO OPENINGS IN THE EXTERIOR WALL OF THE GROUND LEVEL STORAGE SO THE LOCATION OF THE FIRE SEPARATION LINE IS NOT DEPENDANT ON OPENING PROTECTION.

SITE ACCESSIBLE PATH OF TRAVEL NOTES

1. PROVIDE A CONTINUOUS UNOBSTRUCTED ACCESSIBLE ROUTE OF TRAVEL CONNECTING ALL ACCESSIBLE ELEMENTS AND SPACES IN AN ACCESSIBLE BUILDING OR FACILITY THAT CAN BE NEGOTIATED BY A PERSON WITH A SEVERE DISABILITY USING A WHEELCHAIR, AND THAT IS ALSO SAFE FOR AND USABLE BY PERSONS WITH OTHER DISABILITIES, AND THAT ALSO IS CONSISTENT WITH THE DEFINITION OF "PATH OF TRAVEL" IN SECTIONS 217-P AND 1102B.

2. SITE DEVELOPMENT AND GRADING SHALL BE DESIGNED TO PROVIDE ACCESS TO ALL ENTRANCES AND EXTERIOR GROUND FLOOR EXITS, AND ACCESS TO NORMAL PATHS OF TRAVEL, AND WHERE NECESSARY TO PROVIDE ACCESS, SHALL INCORPORATE PEDESTRIAN RAMPS, CURB RAMPS, ETC. (SECTION 1127B.1)

3. ALL ROUTES AND AT LEAST ONE ACCESSIBLE ROUTE WITHIN THE BOUNDARY OF THE SITE SHALL BE PROVIDED FROM PUBLIC TRANSPORTATION STOPS, ACCESSIBLE PARKING, ACCESSIBLE PASSENGER LOADING ZONES, AND PUBLID STREETS OR SIDEWALKS TO THE ACCESSIBLE BUILDING ENTRANCE THEY SERVE. (SEC. 1114B.1.2)

4. WHEN MORE THAN ONE BUILDING OR FACILITY IS LOCATED ON A SITE, ACCESSIBLE ROUTES OF TRAVEL SHALL BE PROVIDED BETWEEN BUILDINGS AND ACCESSIBLE SITE FACILITIES. (SEC. 1114B.1.2 & 1127B.1)

5. THE ACCESSIBLE ROUTE OF TRAVEL SHALL "BE THE MOST PRACTICAL DIRECT ROUTE BETWEEN ACCESSIBLE BUILDING ENTRANCES, ACCESSIBLE SITE FACILITIES, AND THE ACCESSIBLE ENTRANCE TO THE SITE TO THE MAXIMUM EXTENT FEASIBLE, COINICIDING WITH THE ROUTE FOR THE GENERAL PUBLIC. (SEC. 1114B.1.2 & 1127B.1)

6. PROVIDE SIGNS DISPLAYING THE INTERNATIONAL SYMBOL OF ACCESSIBILITY AT EVERY PRIMARY PUBLIC ENTRANCE AND AT EVERY MAJOR JUNCTION ALONG OR LEADING TO AN ACCESSIBLE ROUTE OF TRAVEL. SIGNS SHALL INDICATE THE DIRECTION TO ACCESSIBLE BUILDING ENTRANCES AND SHALL COMPLY WITH SECTION 1117B.E. (SEC. 1127B.3)

7. WALKS AND SIDEWALKS SHALL HAVE A CONTINUOUS COMMON SURFACE, NOT INTERRUPTED BY STEPS OR BY ABRUPT CHANGES IN LEVEL EXCEEDING 1/2 INCH, AND SHALL BE A MINIMUM OF 48 INCHES WIDE. (SEC 1137B.7.1)

8. WHEN ABRUPT CHANGES IN LEVEL NOT EXCEEDING 1/2 INCH OCCUR, THEY SHALL BE BEVELED WITH A SLOPE NO GREATER THAN 1 UNIT VERTICAL TO 2 UNITS HORIZONTAL, EXCEPT THAT LEVEL CHANGES NOT EXCEEDING 1/4 INCH MAY BE VERTICAL. (SEC. 1138.7.4 & FIGURES 11B-5E(c) and (d))

9. ABRUPT CHANGES IN LEVEL ALONG ANY ACCESSIBLE ROUTE EXCEEDING 1/2 INCH SHALL COMPLY WITH THE REQUIREMENTS FOR CURB RAMPS. (SEC. 1133B.7.4)

10. WHEN SLOPE IN THE DIRECTION OF TRAVEL OF ANY WALK EXCEEDS 1:20 (5 % GRADIENT) IT SHALL COMPLY WITH THE PROVISIONS OF SECTION 1133B.5 AS A PEDESTRIAN RAMP. (SEC. 1133B.7.3)

11. WALK AND SIDEWALK SURFACE CROSS SLOPES SHALL NOT EXCEED 1/4 INCH PER FOOT. (SEC. 1133B.7.1.3)

12. WALKS SHALL BE PROVIDED WITH A LEVEL AREA NOT LESS THAN 60 INCHES x 60 INCHES AT A DOOR OR GATE THAT SWINGS TOWARD THE WALK, AND NOT LESS THAN 48 INCHES WIDE x 44 INCHES DEEP AT A DOOR OR GATE THAT SWINGS AWAY FROM THE WALK. (SEC. 1133B.7.5)

13. WALKS SHALL BE PROVIDED WITH A LEVEL AREA NOT LESS THAN 60 INCHES x 60 INCHES AT A DOOR OR GATE THAT SWINGS TOWARD THE WALK, AND NOT LESS THAN 48 INCHES WIDE x 44 INCHES DEEP AT A DOOR OR GATE THAT SWINGS AWAY FROM THE WALK. (SEC. 1133B.7.5)

14. WALKS, SIDEWALKS, AND PEDESTRIAN WAYS SHALL BE FREE OF GRATINGS WHENEVER POSSIBLE. GRID OPENINGS IN GRATINGS SHALL BE 1/2 INCH WIDE MAX. IN THE DIRECTION OF TRAFFIC FLOW. ELONGATED OPENINGS, IF PROVIDED SHALL BE PLACES SO THAT THE LONG DIMENSION IS PERPENDICULAR TO THE DOMINANT DIRECTION OF TRAVEL. (SEC. 1023.2 & FIG. 11B-7B(a))

15. SURFACES OF WALK AND SIDEWALKS WITH A SLOPE OF 6 PERCENT OR MORE GRADIENT SHALL BE SLIP RESISTANT. (SEC 1133B.7.2)

16. ABRUPT CHANGES IN LEVEL 4 INCHES OR MORE EXCEPT BETWEEN A WALK OR A SIDEWALK AND ADJACENT STREETS OR DRIVEWAYS SHALL BE IDENTIFIED BY 6 INCH HIGH CURBS ABOVE THE WALK SURFACE. (SEC 1133B.8.1)

17. ACCESSIBLE PATH OF TRAVEL SHALL BE MAINTAINED FREE OF OVERHANGING OBSTRUCTIONS TO 84" MINIMUM AND PROTRUDING OBJECTS GREATER THAN 4" PROJECTION FROM WALL AND ABOVE 27" AND LESS THAN 84".

PROJECT NORTH

1 / PA-1.2 PARKING GARAGE SITE PLAN

1/16" = 1'-0"

Bayley Construction
3730 S. Susan St.
Suite 200
Santa Ana, CA. 92704
CA. License 734880
Tel 714-540-8863
Fax 714-556-8863

Bayley Construction
8005 S.E. 28th St.
P.O. Box 9004
Mercer Island, WA. 98040
WA. License BAYLEC034JC
Tel 206-621-8884
Fax 206-343-7728

Pacific Parking DESIGN
6 Venture, Suite 275 949.341.0066 t
Irvine, California 92618 949.341.0099 f

DLR Group WWCOT
Architecture Engineering Planning Interiors
4280 Latham Street, Suite H 951.682.0470 t
Riverside, California 92501 951.682.1801 f

LICENSED ARCHITECT SCOTT BRAYTON BERMAN C-22700 EXP. 9-30-13 STATE OF CALIFORNIA

Public Agency Submittal:
Issued for Bidding:
Issued for Construction:

Revisions:

A 09.15.2011 PERMIT SET

PHASE II: FOX ENTERTAINMENT PLAZA: PARKING GARAGE

3601 Market Street
Riverside, CA 92501

CITY of RIVERSIDE

3900 Main Street, Riverside, CA 92522

Phase:
Revised 04.19.2011
PPD Project № 10-101

PARKING GARAGE SITE PLAN

Issued Date: 05.02.2011
Drawn By: RTR
Checked By: SBH

PA-1.2
Sheet №

File Path & Name: C:\Dimension Z\PPD\Projects\2009 - Fox Plaza Parking Structure (Bayley)\Fox PPD Revit\PPD Fox Theater Parking Garage_Owner.rvt
© WWCOT 2009 - Plotted 9/13/2011 10:24:41 AM

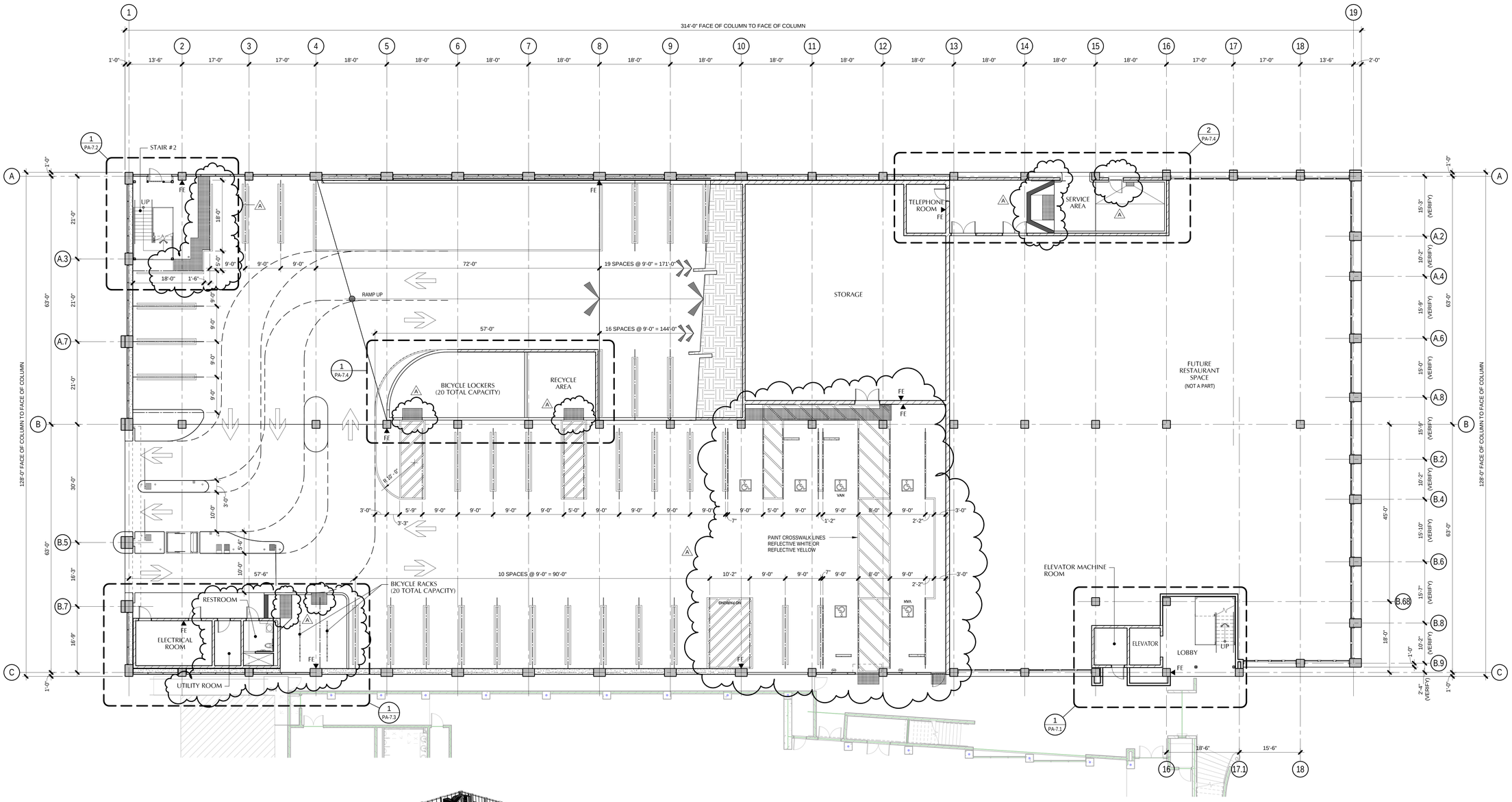

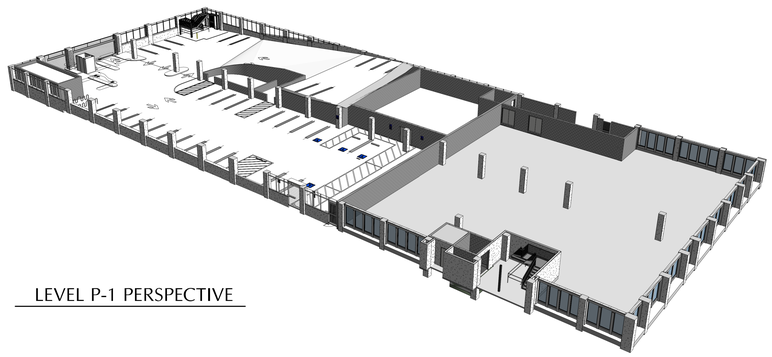

LEVEL P-1 PERSPECTIVE

THESE PLANS ARE FOR THE 'SHELL ONLY' PERMIT OF THE OCCUPANCY OF NON-PARKING AREAS (i.e. RESTAURANT AREA LOCATED ON LEVEL P-1). THE OCCUPANCY OF THE NON-PARKING AREAS WILL NOT OCCUR UNTIL AFTER THE COMPLETION OF TENANT IMPROVEMENTS, WHICH WILL BE THE SUBJECT OF FUTURE SEPARATE SUBMITTALS UNDER SEPARATE PERMITS.

STRIPING NOTES

1. 90 DEGREE STANDARD STALLS ARE 9'-0" IN WIDTH AND ARE 18'-0" LONG, TYPICAL U.N.O.
2. All DRIVE AISLES ARE 25'-0" WIDE (MINIMUM).
3. ALL 90 DEGREE DISABLED SPACES ARE 9'-0" WIDE X 18'-0" LONG (MIN.), WITH A 5'-0" WIDE LOADING AISLE (MIN.), & 8'-0" WIDE LOADING AISLE AT VAN ACCESSIBLE SPACES.
4. SEE DETAILS 2 & 5/PA-9.1 FOR TYPICAL DISABLED STRIPING AND SYMBOLS.
5. SEE SHEET PA-9.1 FOR TYPICAL STRIPING DETAILS.
6. SEE DETAIL 3/PA-9.1 FOR TRAFFIC ARROWS.
7. SEE DETAIL 4/PA-9.1 FOR CONCRETE WHEELSTOPS.
8. SEE DETAIL 7/PA-9.1 FOR PAINTED STOP SIGNS.
9. ▶ INDICATES FIRE EXTINGUISHERS W/CABINETS.

PROVIDE SIGNAGE AT EACH FIRE EXTINGUISHER LOCATION PER THE LOCAL FIRE AUTHORITY.

FIRE EXTINGUISHERS SHALL BE RATED MINIMUM 4A:80B:C

PROJECT NORTH

1 / PA-2.1 LEVEL P-1 STRIPING PLAN

3/32" = 1'-0"

Bayley Construction
3730 S. Susan St.
Suite 200
Santa Ana, CA. 92704
CA. License 734880
Tel 714-540-8863
Fax 714-556-8863

Bayley Construction
8005 S.E. 28th St.
P.O. Box 9004
Mercer Island, WA. 98040
WA. License BAYLECO343JC
Tel 206-621-8884
Fax 206-343-7728

BAYLEY CONSTRUCTION

Pacific Parking DESIGN
6 Venture, Suite 275 949.341.0066 t
Irvine, California 92618 949.341.0099 f

DLR Group WWCOT
Architecture Engineering Planning Interiors
4280 Latham Street, Suite H 951.682.0470 t
Riverside, California 92501 951.682.1801 f

LICENSED ARCHITECT SCOTT BRAYTON BERMAN C-22700 EXP. 9-30-13 STATE OF CALIFORNIA

Public Agency Submittal:
Issued for Bidding:
Issued for Construction:

Revisions:

A 09.15.2011 PERMIT SET

PHASE II: FOX ENTERTAINMENT PLAZA: PARKING GARAGE

3601 Market Street
Riverside, CA 92501

CITY of RIVERSIDE

CITY OF RIVERSIDE

3900 Main Street, Riverside, CA 92522

Phase:
Revised 04.19.2011
PPD Project № 10-101

LEVEL P-1 STRIPING PLAN

Issued Date: 05.02.2011
Drawn By: RTR
Checked By: SBH

PA-2.1

Sheet №

File Path & Name: C:\Dimension Z\PPD Projects\2009 - Fox Plaza Parking Structure (Bayley)\Fox PPD Revit\PPD Fox Theater Parking Garage_Owner.rvt
© WWCOT 2009 -- Plotted: 9/13/2011 10:25:31 AM

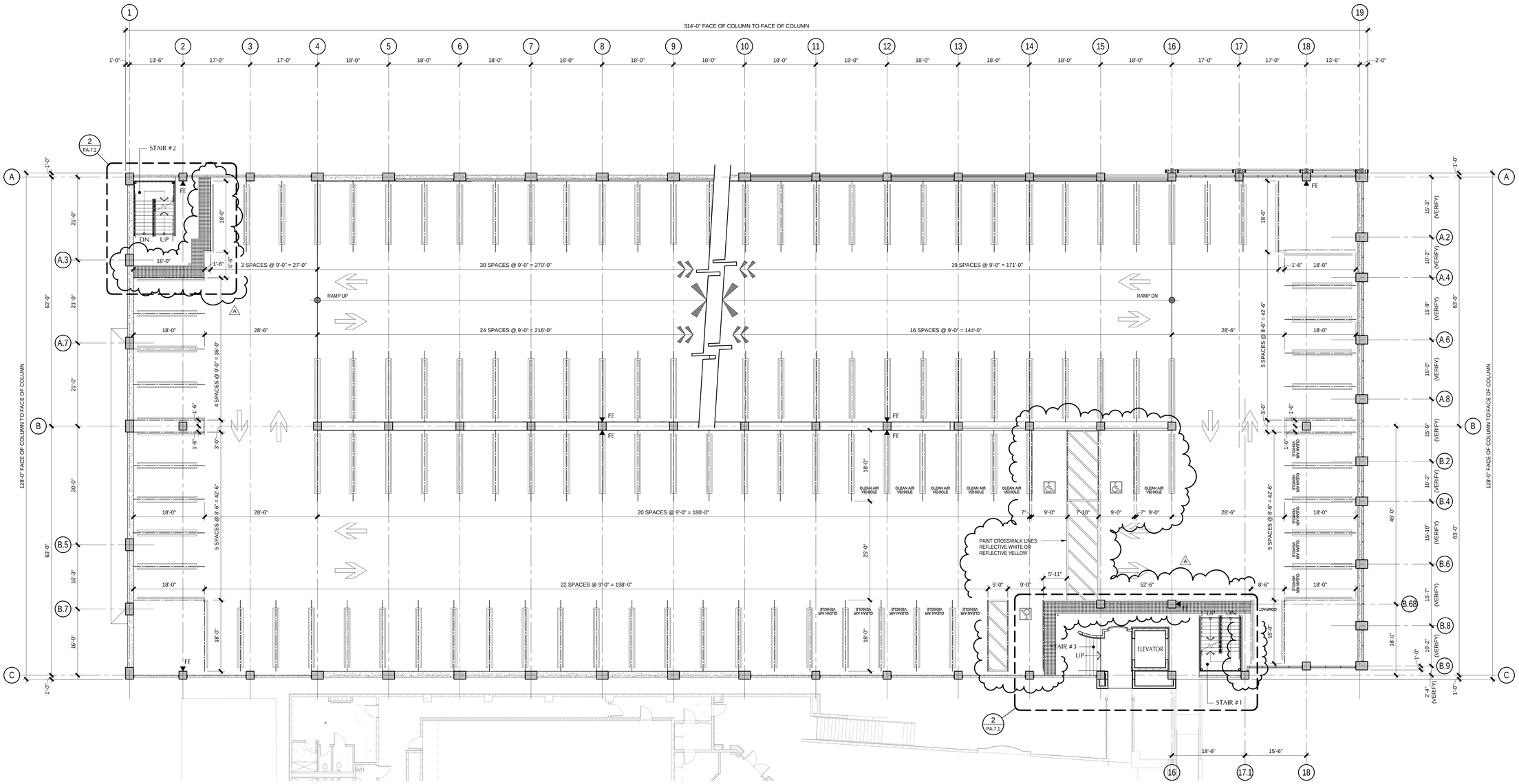

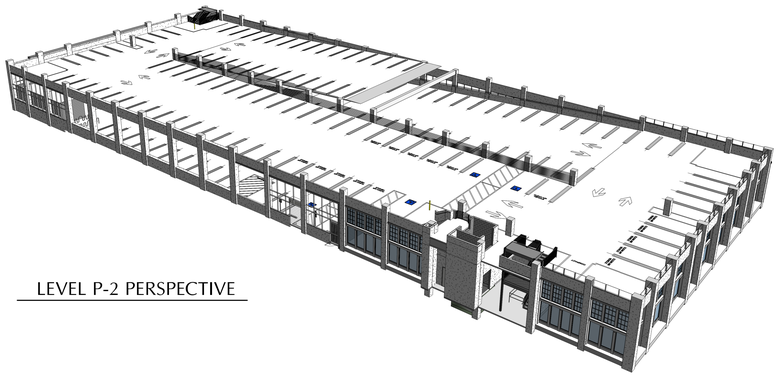

LEVEL P-2 PERSPECTIVE

STRIPING NOTES

1. 90 DEGREE STANDARD STALLS ARE 9'-0" IN WIDTH AND ARE 18'-0" LONG, TYPICAL U.N.O.
2. All DRIVE AISLES ARE 25'-0" WIDE (MINIMUM).
3. ALL 90 DEGREE DISABLED SPACES ARE 9'-0" WIDE X 18'-0" LONG (MIN.), WITH A 5'-0" WIDE LOADING AISLE (MIN.), & 8'-0" WIDE LOADING AISLE AT VAN ACCESSIBLE SPACES.
4. SEE DETAILS 2 & 5/PA-9.1 FOR TYPICAL DISABLED STRIPING AND SYMBOLS.
5. SEE SHEET PA-9.1 FOR TYPICAL STRIPING DETAILS.
6. SEE DETAIL 3/PA-9.1 FOR TRAFFIC ARROWS.
7. SEE DETAIL 4/PA-9.1 FOR CONCRETE WHEELSTOPS.
8. SEE DETAIL 7/PA-9.1 FOR PAINTED STOP SIGNS.
9. ▶ INDICATES FIRE EXTINGUISHERS W/CABINETS.

PROVIDE SIGNAGE AT EACH FIRE EXTINGUISHER LOCATION PER THE LOCAL FIRE AUTHORITY.

FIRE EXTINGUISHERS SHALL BE RATED MINIMUM 4A:80B:C

PROJECT NORTH

1 / PA-2.2 LEVEL P-2 STRIPING PLAN
3/32" = 1'-0"

Bayley Construction
3730 S. Susan St.
Suite 200
Santa Ana, CA. 92704
CA. License 734880
Tel 714-540-8863
Fax 714-556-8863

Bayley Construction
8005 S.E. 28th St.
P.O. Box 9004
Mercer Island, WA. 98040
WA. License BAYLECO343JC
Tel 206-621-8884
Fax 206-343-7728

BAYLEY CONSTRUCTION

Pacific Parking DESIGN
6 Venture, Suite 275 949.341.0066 t
Irvine, California 92618 949.341.0099 f

DLR Group WWCOT
Architecture Engineering Planning Interiors
4280 Latham Street, Suite H 951.682.0470 t
Riverside, California 92501 951.682.1801 f

LICENSED ARCHITECT SCOTT BRAYTON/BERMAN C-22700 EXP. 9-30-13 STATE OF CALIFORNIA

Public Agency Submittal:
Issued for Bidding:
Issued for Construction:

Revisions:

A 09.15.2011 PERMIT SET

PHASE II: FOX ENTERTAINMENT PLAZA: PARKING GARAGE

3601 Market Street
Riverside, CA 92501

CITY of RIVERSIDE

CITY OF RIVERSIDE

3900 Main Street, Riverside, CA 92522

Phase:
Revised 04.19.2011
PPD Project № 10-101

LEVEL P-2 STRIPING PLAN

Issued Date: 05.02.2011
Drawn By: RTR
Checked By: SBH

PA-2.2
Sheet №

File Path & Name: C:\Dimension Z\PPD\Projects\2009 - Fox Plaza Parking Structure (Bayley)\Fox PPD Revit\PPD Fox Theater Parking Garage_Owner.rvt
© WWCOT 2009 - Plotted 9/13/2011 9:40:54 AM

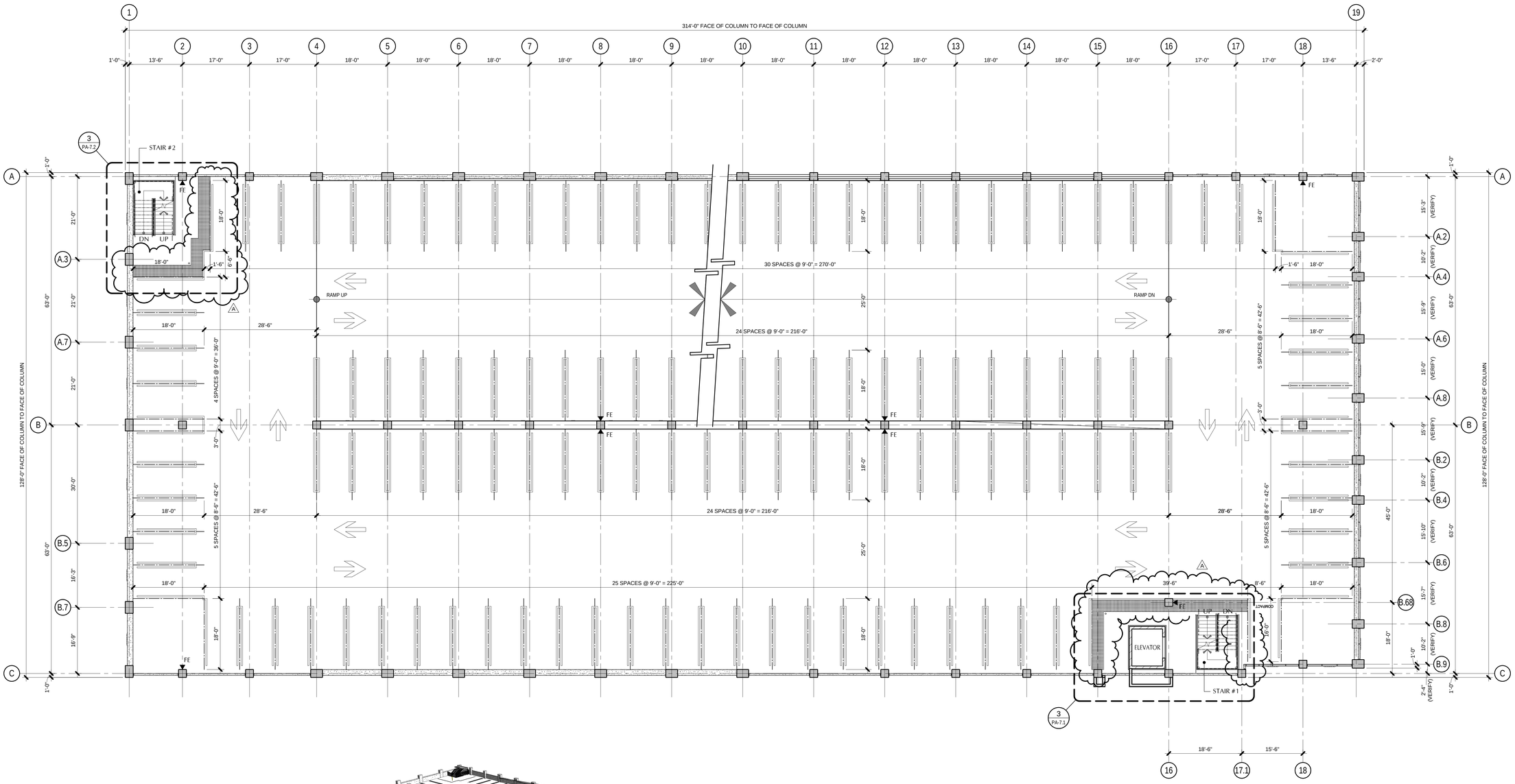

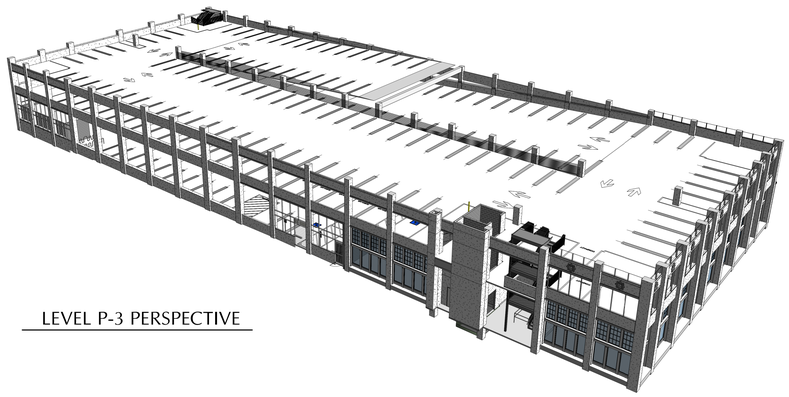

LEVEL P-3 PERSPECTIVE

STRIPING NOTES

1. 90 DEGREE STANDARD STALLS ARE 9'-0" IN WIDTH AND ARE 18'-0" LONG, TYPICAL U.N.O.
2. All DRIVE AISLES ARE 25'-0" WIDE (MINIMUM).
3. ALL 90 DEGREE DISABLED SPACES ARE 9'-0" WIDE X 18'-0" LONG (MIN.), WITH A 5'-0" WIDE LOADING AISLE (MIN.), & 8'-0" WIDE LOADING AISLE AT VAN ACCESSIBLE SPACES.
4. SEE DETAILS 2 & 5/PA-9.1 FOR TYPICAL DISABLED STRIPING AND SYMBOLS.
5. SEE SHEET PA-9.1 FOR TYPICAL STRIPING DETAILS.
6. SEE DETAIL 3/PA-9.1 FOR TRAFFIC ARROWS.
7. SEE DETAIL 4/PA-9.1 FOR CONCRETE WHEELSTOPS.
8. SEE DETAIL 7/PA-9.1 FOR PAINTED STOP SIGNS.
9. ▶ INDICATES FIRE EXTINGUISHERS W/CABINETS.

PROVIDE SIGNAGE AT EACH FIRE EXTINGUISHER LOCATION PER THE LOCAL FIRE AUTHORITY.

FIRE EXTINGUISHERS SHALL BE RATED MINIMUM 4A:80B:C

PROJECT NORTH

1 / PA-2.3 LEVEL P-3 STRIPING PLAN

3/32" = 1'-0"

Bayley Construction
3730 S. Susan St.
Suite 200
Santa Ana, CA. 92704
CA. License 734880
Tel 714-540-8863
Fax 714-556-8863

Bayley Construction
8005 S.E. 28th St.
P.O. Box 9004
Mercer Island, WA. 98040
WA. License BAYLECO343JC
Tel 206-621-8884
Fax 206-343-7728

BAYLEY CONSTRUCTION

Pacific Parking DESIGN
6 Venture, Suite 275 949.341.0066 t
Irvine, California 92618 949.341.0099 f

DLR Group WWCOT
Architecture Engineering Planning Interiors
4280 Latham Street, Suite H 951.682.0470 t
Riverside, California 92501 951.682.1801 f

LICENSED ARCHITECT SCOTT BRAYTON BERMAN C-22700 EXP. 9-30-13 STATE OF CALIFORNIA

Public Agency Submittal:
Issued for Bidding:
Issued for Construction:

Revisions:

A 09.15.2011 PERMIT SET

PHASE II: FOX ENTERTAINMENT PLAZA: PARKING GARAGE

3601 Market Street
Riverside, CA 92501

CITY of RIVERSIDE

CITY OF RIVERSIDE

3900 Main Street, Riverside, CA 92522

Phase:
Revised 04.19.2011
PPD Project № 10-101

LEVEL P-3 STRIPING PLAN

Issued Date: 05.02.2011
Drawn By: RTR
Checked By: SBH

PA-2.3

Sheet №

File Path & Name: C:\Dimension Z\PPD\Projects\2009 - Fox Plaza Parking Structure (Bayley)\Fox PPD Revit\PPD Fox Theater Parking Garage_Owner.rvt
© WWCOT 2009 -- Plotted: 9/13/2011 10:27:10 AM

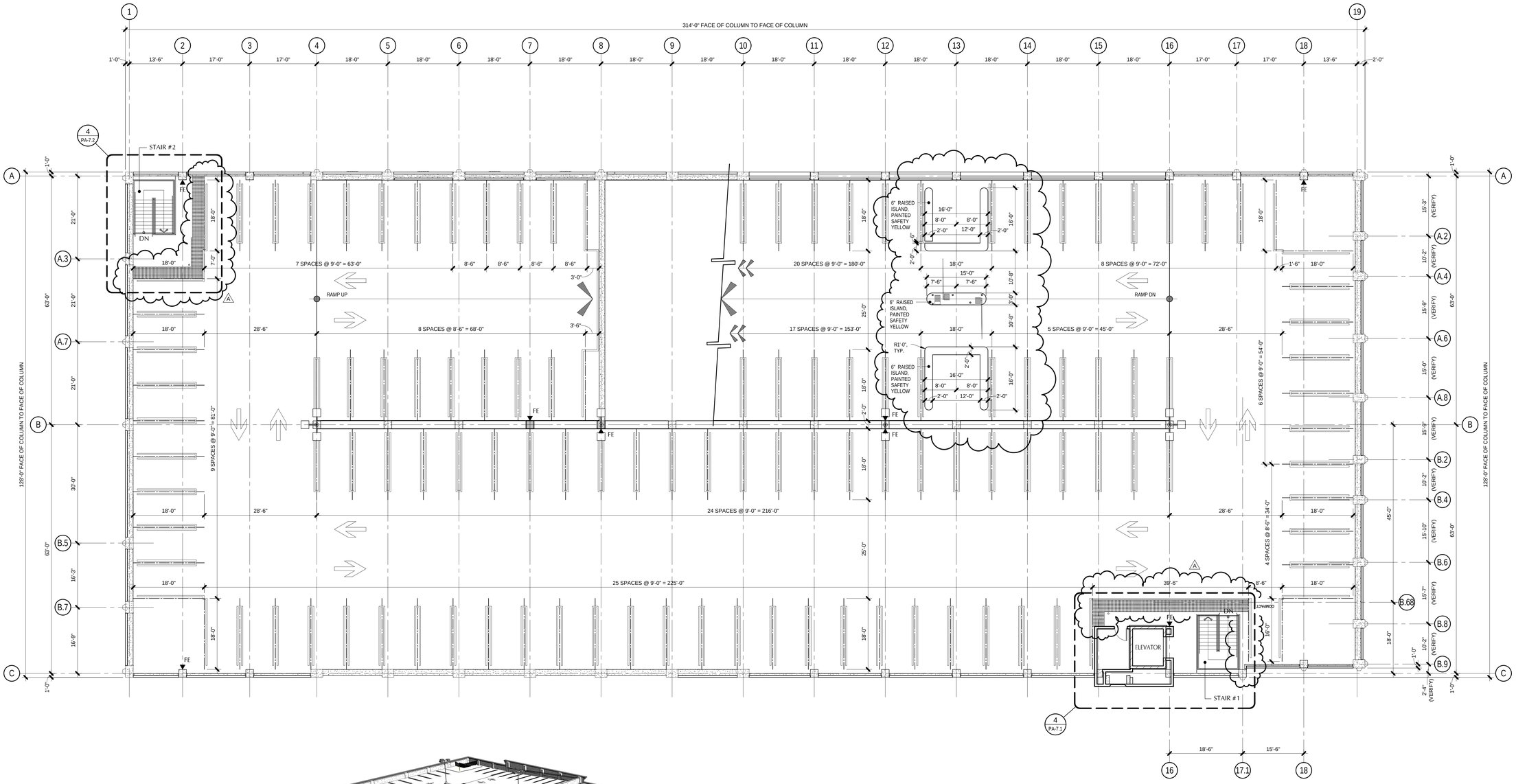

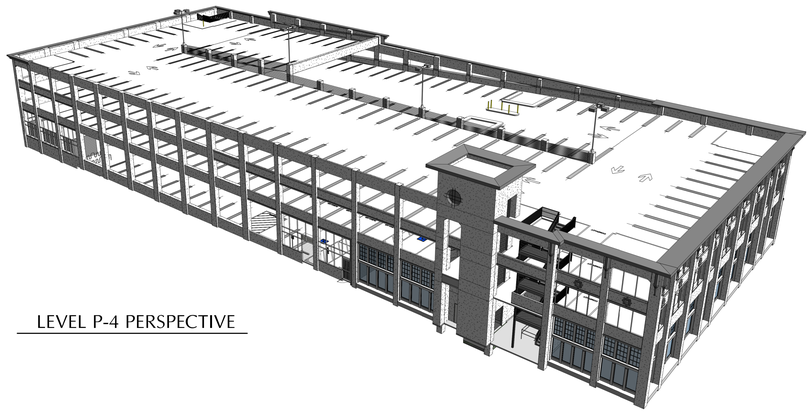

LEVEL P-4 PERSPECTIVE

STRIPING NOTES

1. 90 DEGREE STANDARD STALLS ARE 9'-0" IN WIDTH AND ARE 18'-0" LONG, TYPICAL U.N.O.
2. All DRIVE AISLES ARE 25'-0" WIDE (MINIMUM).
3. ALL 90 DEGREE DISABLED SPACES ARE 9'-0" WIDE X 18'-0" LONG (MIN.), WITH A 5'-0" WIDE LOADING AISLE (MIN.), & 8'-0" WIDE LOADING AISLE AT VAN ACCESSIBLE SPACES.
4. SEE DETAILS 2 & 5/PA-9.1 FOR TYPICAL DISABLED STRIPING AND SYMBOLS.
5. SEE SHEET PA-9.1 FOR TYPICAL STRIPING DETAILS.
6. SEE DETAIL 3/PA-9.1 FOR TRAFFIC ARROWS.
7. SEE DETAIL 4/PA-9.1 FOR CONCRETE WHEELSTOPS.
8. SEE DETAIL 7/PA-9.1 FOR PAINTED STOP SIGNS.
9. ▶ INDICATES FIRE EXTINGUISHERS W/CABINETS.

PROVIDE SIGNAGE AT EACH FIRE EXTINGUISHER LOCATION PER THE LOCAL FIRE AUTHORITY.

FIRE EXTINGUISHERS SHALL BE RATED MINIMUM 4A:80B:C

PROJECT NORTH

1 / PA-2.4 LEVEL P-4 STRIPING PLAN

3/32" = 1'-0"

Bayley Construction
3730 S. Susan St.
Suite 200
Santa Ana, CA. 92704
CA. License 734880
Tel 714-540-8863
Fax 714-556-8863

Bayley Construction
8005 S.E. 28th St.
P.O. Box 9004
Mercer Island, WA. 98040
WA. License BAYLECO343JC
Tel 206-621-8884
Fax 206-343-7728

Pacific Parking DESIGN
6 Venture, Suite 275 949.341.0066 t
Irvine, California 92618 949.341.0099 f

DLR Group WWCOT
Architecture Engineering Planning Interiors
4280 Latham Street, Suite H 951.682.0470 t
Riverside, California 92501 951.682.1801 f

LICENSED ARCHITECT SCOTT BRAYTON/BERMAN C-22700 EXP. 9-30-13 STATE OF CALIFORNIA

Public Agency Submittal:
Issued for Bidding:
Issued for Construction:

Revisions:

A 09.15.2011 PERMIT SET

PHASE II: FOX ENTERTAINMENT PLAZA: PARKING GARAGE

3601 Market Street
Riverside, CA 92501

CITY of RIVERSIDE

CITY OF RIVERSIDE

3900 Main Street, Riverside, CA 92522

Phase:
Revised 04.19.2011
PPD Project № 10-101

LEVEL P-4 STRIPING PLAN

Issued Date: 05.02.2011
Drawn By: RTR
Checked By: SBH

PA-2.4

Sheet №

File Path & Name: C:\Dimension Z\PPD\Projects\2009 - Fox Plaza Parking Structure (Bayley)\Fox PPD Revit\PPD Fox Theater Parking Garage_Owner.rvt
© WWCOT 2009 - Plotted 9/13/2011 10:27:53 AM

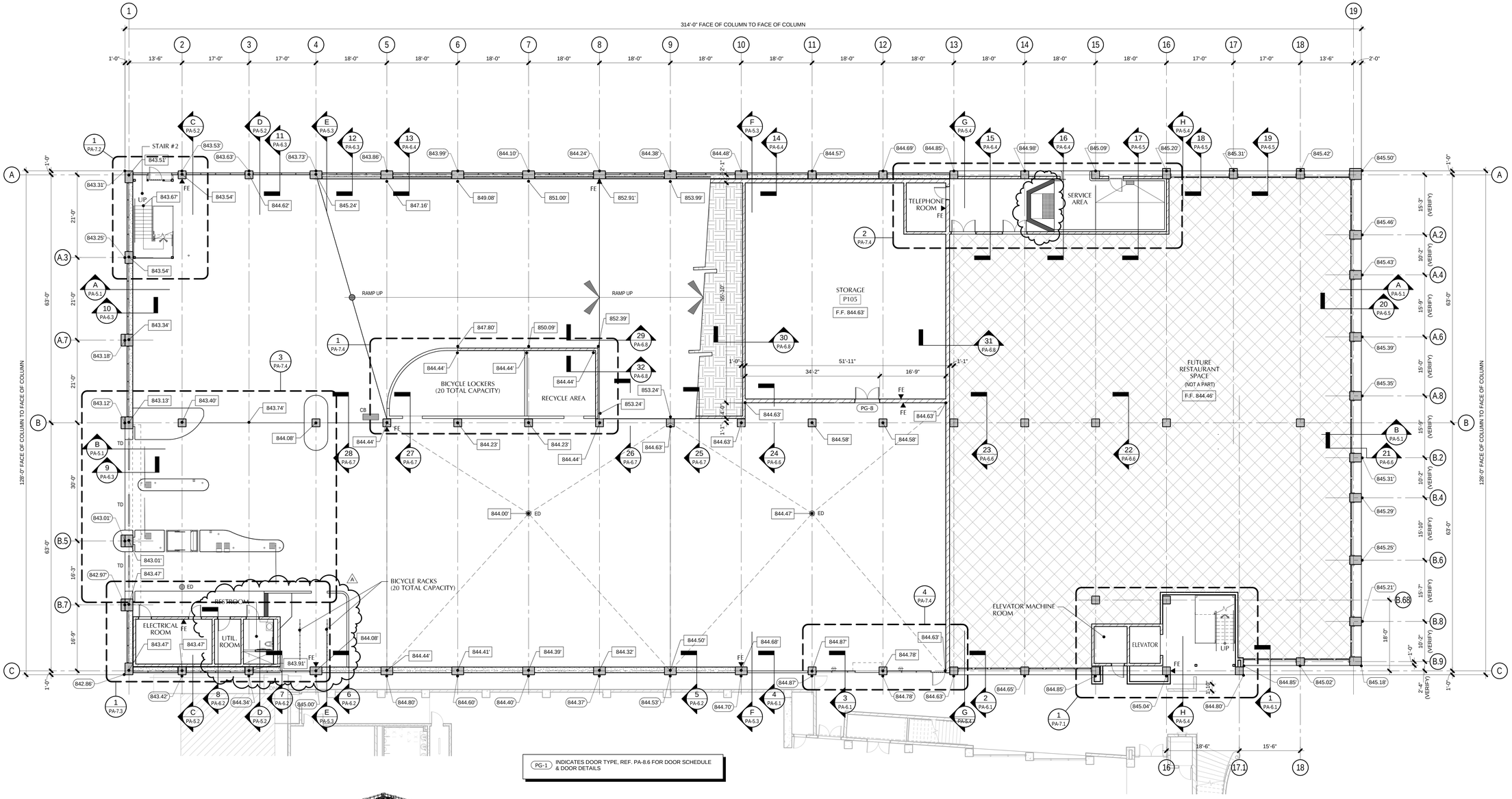

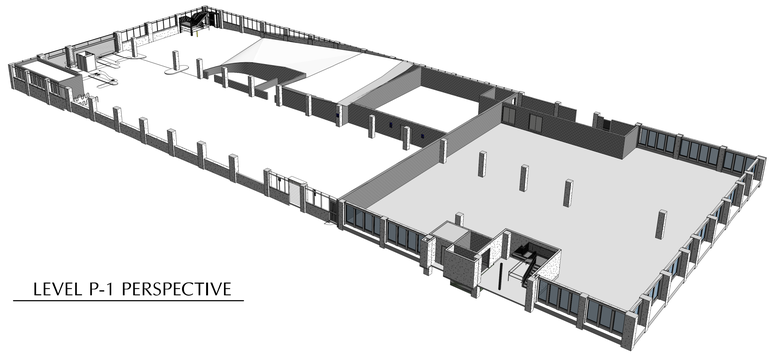

LEVEL P-1 PERSPECTIVE

THESE PLANS ARE FOR THE 'SHELL ONLY' PERMIT OF THE OCCUPANCY OF NON-PARKING AREAS (i.e. RESTAURANT AREA LOCATED ON LEVEL P-1). THE OCCUPANCY OF THE NON-PARKING AREAS WILL NOT OCCUR UNTIL AFTER THE COMPLETION OF TENANT IMPROVEMENTS, WHICH WILL BE THE SUBJECT OF FUTURE SEPARATE SUBMITTALS UNDER SEPARATE PERMITS.

PLAN NOTES

1. ALL ELEVATIONS ARE SHOWN TO THE TOP OF NOMINAL STRUCTURAL SLAB AND DO NOT ACCOUNT FOR THICKENED EDGES, TYP. U.N.O.
2. ALL EXPOSED EDGES OF PRECAST CONCRETE COLUMNS, BEAMS, GIRDERS, ETC., ARE TO RECEIVE A 3/4" CHAMFER, TYPICAL. ALL EXPOSED EDGES OF CONCRETE SPANDRELS TO RECEIVE AN EASED RADIUS EDGE.
3. E.D./R.D./T.D. INDICATES DRAINS, SEE DETAILS ON PA-8.3 AND PLUMBING DRAWINGS.
4. DSP INDICATES DRY STANDPIPE, SEE FIRE PROTECTION DRAWINGS.
5. ▶ INDICATES FIRE EXTINGUISHERS W/ CABINETS.
6. FIRE EXTINGUISHERS SHALL BE RATED MINIMUM 4A:80B:C
7. PROVIDE SIGNAGE AT EACH FIRE EXTINGUISHER LOCATION PER THE LOCAL FIRE AUTHORITY.
8. IT IS THE CONTRACTOR'S RESPONSIBILITY TO MAINTAIN THE REQUIRED CLEARANCES BELOW THE BOTTOM OF STRUCT'L, ARCH'L, MECH'L & ELECT'L ELEMENTS TO THE TOP OF THE SLAB BELOW.
9. CLEARANCES SHALL BE 8'-2" (MINIMUM) BELOW THE SLAB SOFFITS AND FIXTURES IN THE DRIVE AISLES LEADING TO DISABLED PARKING SPACES AND AT ALL DISABLED PARKING SPACES. CLEARANCES SHALL BE 8'-2" (MINIMUM) BELOW THE SLAB SOFFITS AND FIXTURES AT ALL OTHER DRIVE AISLES AND PARKING SPACES.
10. VERIFY ALL SLAB AND WALL OPENINGS WITH THE PLUMBING, FIRE PROTECTION AND ELECTRICAL DRAWINGS.
11. VERIFY ALL PIPE SLEEVES W/ THE PLUMBING OR FIRE PROTECTION SUBCONTRACTORS PRIOR TO POURING OF BEAMS OR GIRDERS.
12. SEE THE ENLARGED STAIR PLANS & DETAILS FOR ADDITIONAL INFORMATION REGARDING HANDRAILS, BOLLARDS, EMBEDS, ETC.
13. (XXX.XX) INDICATES GRADE/SURFACE ELEVATION PROVIDED BY CIVIL ENGINEER.
14. XXX.XX INDICATES FLOOR ELEVATION.

PROJECT NORTH

1 / PA-3.1 LEVEL P-1 FLOOR PLAN
3/32" = 1'-0"

Bayley Construction
3730 S. Susan St.
Suite 200
Santa Ana, CA. 92704
CA. License 734880
Tel 714-540-8863
Fax 714-556-8863

Bayley Construction
8005 S.E. 28th St.
P.O. Box 9004
Mercer Island, WA. 98040
WA. License BAYLECO343JC
Tel 206-621-8884
Fax 206-343-7728

Pacific Parking DESIGN
6 Venture, Suite 275 949.341.0066 t
Irvine, California 92618 949.341.0099 f

DLR Group WWCOT
Architecture Engineering Planning Interiors
4280 Latham Street, Suite H 951.682.0470 t
Riverside, California 92501 951.682.1801 f

LICENSED ARCHITECT SCOTT BRAYTON HERMAN C-22700 EXP. 9-30-13 STATE OF CALIFORNIA

Public Agency Submittal:
Issued for Bidding:
Issued for Construction:

Revisions:

A 09.15.2011 PERMIT SET

PHASE II: FOX ENTERTAINMENT PLAZA: PARKING GARAGE

3601 Market Street
Riverside, CA 92501

CITY of RIVERSIDE

CITY OF RIVERSIDE
3900 Main Street, Riverside, CA 92522

Phase:
Revised 04.19.2011
PPD Project № 10-101

LEVEL P-1 FLOOR PLAN

Issued Date: 05.02.2011
Drawn By: RTR
Checked By: SBH

PA-3.1
Sheet №

File Path & Name: C:\Dimension Z\PPD\Projects\2009 - Fox Plaza Parking Structure (Bayley)\Fox PPD Revit\PPD Fox Theater Parking Garage_Owner.rvt
Plotted 9/13/2011 10:28:32 AM

© WWCOT 2009

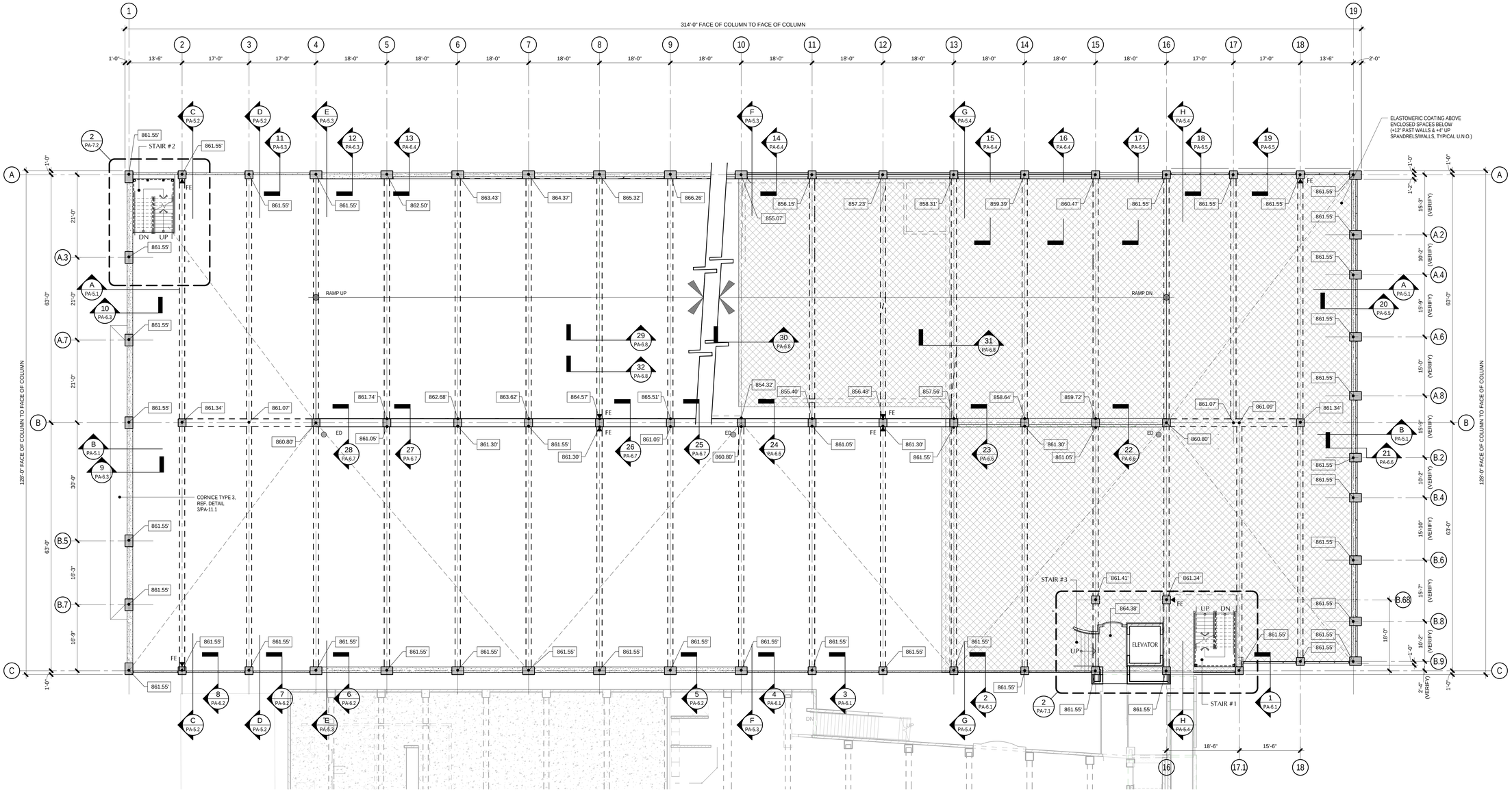

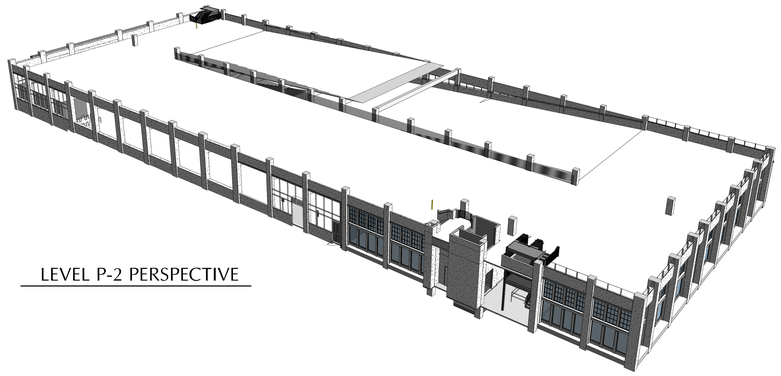

LEVEL P-2 PERSPECTIVE

PLAN NOTES

1. ALL ELEVATIONS ARE SHOWN TO THE TOP OF NOMINAL STRUCTURAL SLAB AND DO NOT ACCOUNT FOR THICKENED EDGES, TYP. U.N.O.
2. ALL EXPOSED EDGES OF PRECAST CONCRETE COLUMNS, BEAMS, GIRDERS, ETC., ARE TO RECEIVE A 3/4" CHAMFER, TYPICAL. ALL EXPOSED EDGES OF CONCRETE SPANDRELS TO RECEIVE AN EASED RADIUS EDGE.
3. E.D./R.D./T.D. INDICATES DRAINS, SEE DETAILS ON PA-8.3 AND PLUMBING DRAWINGS.
4. DSP INDICATES DRY STANDPIPE, SEE FIRE PROTECTION DRAWINGS.
5. ▶ INDICATES FIRE EXTINGUISHERS W/ CABINETS.
6. FIRE EXTINGUISHERS SHALL BE RATED MINIMUM 4A:80B:C
7. PROVIDE SIGNAGE AT EACH FIRE EXTINGUISHER LOCATION PER THE LOCAL FIRE AUTHORITY.
8. IT IS THE CONTRACTOR'S RESPONSIBILITY TO MAINTAIN THE REQUIRED CLEARANCES BELOW THE BOTTOM OF STRUCT'L, ARCH'L, MECH'L & ELECT'L ELEMENTS TO THE TOP OF THE SLAB BELOW.
9. CLEARANCES SHALL BE 8'-2" (MINIMUM) BELOW THE SLAB SOFFITS AND FIXTURES IN THE DRIVE AISLES LEADING TO DISABLED PARKING SPACES AND AT ALL DISABLED PARKING SPACES. CLEARANCES SHALL BE 8'-2" (MINIMUM) BELOW THE SLAB SOFFITS AND FIXTURES AT ALL OTHER DRIVE AISLES AND PARKING SPACES.
10. VERIFY ALL SLAB AND WALL OPENINGS WITH THE PLUMBING, FIRE PROTECTION AND ELECTRICAL DRAWINGS.
11. VERIFY ALL PIPE SLEEVES W/ THE PLUMBING OR FIRE PROTECTION SUBCONTRACTORS PRIOR TO POURING OF BEAMS OR GIRDERS.
12. SEE THE ENLARGED STAIR PLANS & DETAILS FOR ADDITIONAL INFORMATION REGARDING HANDRAILS, BOLLARDS, EMBEDS, ETC.
13. (XXX.XX) INDICATES GRADE/SURFACE ELEVATION PROVIDED BY CIVIL ENGINEER.
14. [XXX.XX] INDICATES FLOOR ELEVATION.

PROJECT NORTH

1 / PA-3.2 LEVEL P-2 FLOOR PLAN
3/32" = 1'-0"

Bayley Construction
3730 S. Susan St.
Suite 200
Santa Ana, CA. 92704
CA. License 734880
Tel 714-540-8863
Fax 714-556-8863

Bayley Construction
8005 S.E. 28th St.
P.O. Box 9004
Mercer Island, WA. 98040
WA. License BAYLECO343C
Tel 206-621-8884
Fax 206-343-7728

Pacific Parking DESIGN
6 Venture, Suite 275 949.341.0066 t
Irvine, California 92618 949.341.0099 f

DLR Group WWCOT
Architecture Engineering Planning Interiors
4280 Latham Street, Suite H 951.682.0470 t
Riverside, California 92501 951.682.1801 f

LICENSED ARCHITECT SCOTT BRAYTON/BERMAN C-22700 EXP. 9-30-13 STATE OF CALIFORNIA

Public Agency Submittal:
Issued for Bidding:
Issued for Construction:

Revisions:
A 09.15.2011 PERMIT SET

PHASE II: FOX ENTERTAINMENT PLAZA: PARKING GARAGE

3601 Market Street
Riverside, CA 92501

CITY of RIVERSIDE

CITY OF RIVERSIDE
3900 Main Street, Riverside, CA 92522

Phase:
Revised 04.19.2011
PPD Project № 10-101

LEVEL P-2 FLOOR PLAN

Issued Date: 05.02.2011
Drawn By: RTR
Checked By: SBH

PA-3.2
Sheet №

File Path & Name: C:\Dimension Z\PPD\Projects\2009 - Fox Plaza Parking Structure (Bayley)\Fox PPD Revit\PPD Fox Theater Parking Garage_Owner.rvt
© WWCOT 2009 – Plotted 9/13/2011 10:29:36 AM

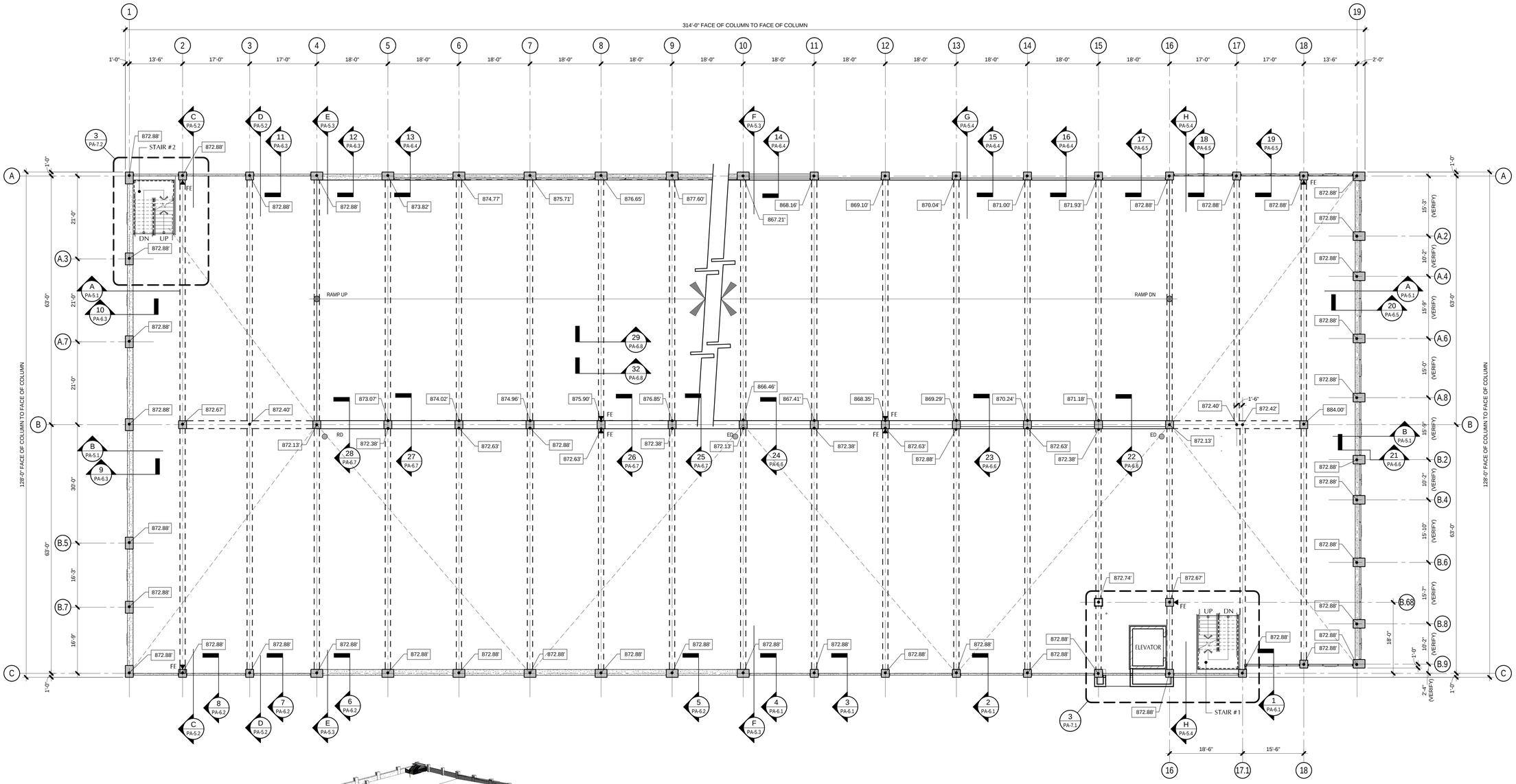

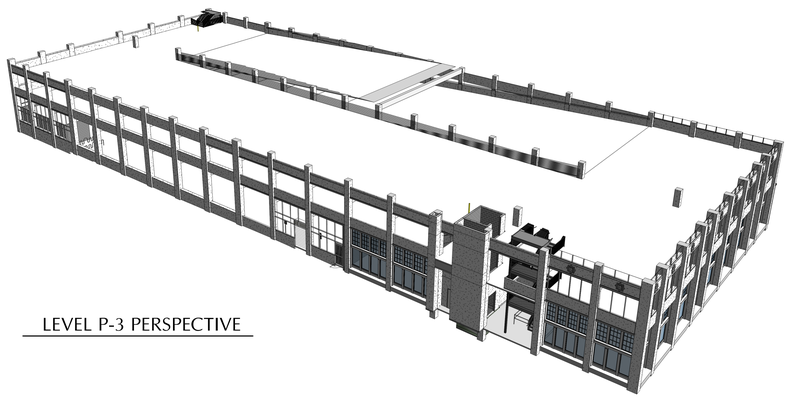

LEVEL P-3 PERSPECTIVE

PLAN NOTES

1. ALL ELEVATIONS ARE SHOWN TO THE TOP OF NOMINAL STRUCTURAL SLAB AND DO NOT ACCOUNT FOR THICKENED EDGES, TYP. U.N.O.
2. ALL EXPOSED EDGES OF PRECAST CONCRETE COLUMNS, BEAMS, GIRDERS, ETC., ARE TO RECEIVE A 3/4" CHAMFER, TYPICAL. ALL EXPOSED EDGES OF CONCRETE SPANDRELS TO RECEIVE AN EASED RADIUS EDGE.
3. E.D./R.D./T.D. INDICATES DRAINS, SEE DETAILS ON PA-8.3 AND PLUMBING DRAWINGS.
4. DSP INDICATES DRY STANDPIPE, SEE FIRE PROTECTION DRAWINGS.
5. ▶ INDICATES FIRE EXTINGUISHERS W/ CABINETS.
6. FIRE EXTINGUISHERS SHALL BE RATED MINIMUM 4A:80B:C
7. PROVIDE SIGNAGE AT EACH FIRE EXTINGUISHER LOCATION PER THE LOCAL FIRE AUTHORITY.
8. IT IS THE CONTRACTOR'S RESPONSIBILITY TO MAINTAIN THE REQUIRED CLEARANCES BELOW THE BOTTOM OF STRUCT'L, ARCH'L, MECH'L & ELECT'L ELEMENTS TO THE TOP OF THE SLAB BELOW.
9. CLEARANCES SHALL BE 8'-2" (MINIMUM) BELOW THE SLAB SOFFITS AND FIXTURES IN THE DRIVE AISLES LEADING TO DISABLED PARKING SPACES AND AT ALL DISABLED PARKING SPACES. CLEARANCES SHALL BE 8'-2" (MINIMUM) BELOW THE SLAB SOFFITS AND FIXTURES AT ALL OTHER DRIVE AISLES AND PARKING SPACES.
10. VERIFY ALL SLAB AND WALL OPENINGS WITH THE PLUMBING, FIRE PROTECTION AND ELECTRICAL DRAWINGS.
11. VERIFY ALL PIPE SLEEVES W/ THE PLUMBING OR FIRE PROTECTION SUBCONTRACTORS PRIOR TO POURING OF BEAMS OR GIRDERS.
12. SEE THE ENLARGED STAIR PLANS & DETAILS FOR ADDITIONAL INFORMATION REGARDING HANDRAILS, BOLLARDS, EMBEDS, ETC.
13. (XXX.XX) INDICATES GRADE/SURFACE ELEVATION PROVIDED BY CIVIL ENGINEER.
14. [XXX.XX] INDICATES FLOOR ELEVATION.

PROJECT NORTH

1 / PA-3.3 LEVEL P-3 FLOOR PLAN
3/32" = 1'-0"

Bayley Construction
3730 S. Susan St.
Suite 200
Santa Ana, CA. 92704
CA. License 734880
Tel 714-540-8863
Fax 714-556-8863

Bayley Construction
8005 S.E. 28th St.
P.O. Box 9004
Mercer Island, WA. 98040
WA. License BAYLECO343C
Tel 206-621-8884
Fax 206-343-7728

BAYLEY CONSTRUCTION

Pacific Parking DESIGN
6 Venture, Suite 275 949.341.0066 t
Irvine, California 92618 949.341.0099 f

DLR Group WWCOT
Architecture Engineering Planning Interiors
4280 Latham Street, Suite H 951.682.0470 t
Riverside, California 92501 951.682.1801 f

LICENSED ARCHITECT SCOTT BRAYTON BERMAN C-22700 EXP. 9-30-13 STATE OF CALIFORNIA

Public Agency Submittal:
Issued for Bidding:
Issued for Construction:

#	Revisions:
A	09.15.2011 PERMIT SET

PHASE II: FOX ENTERTAINMENT PLAZA: PARKING GARAGE

3601 Market Street
Riverside, CA 92501

CITY of RIVERSIDE

CITY OF RIVERSIDE

3900 Main Street, Riverside, CA 92522

Phase:
Revised 04.19.2011
PPD Project № 10-101

LEVEL P-3 FLOOR PLAN

Issued Date: 05.02.2011
Drawn By: RTR
Checked By: SBH

PA-3.3
Sheet №

File Path & Name: C:\Dimension Z\PPD\Projects\2009 - Fox Plaza Parking Structure (Bayley)\Fox PPD Revit\PPD Fox Theater Parking Garage_Owner.rvt
© WWCOT 2009 – Plotted 9/13/2011 10:30:18 AM

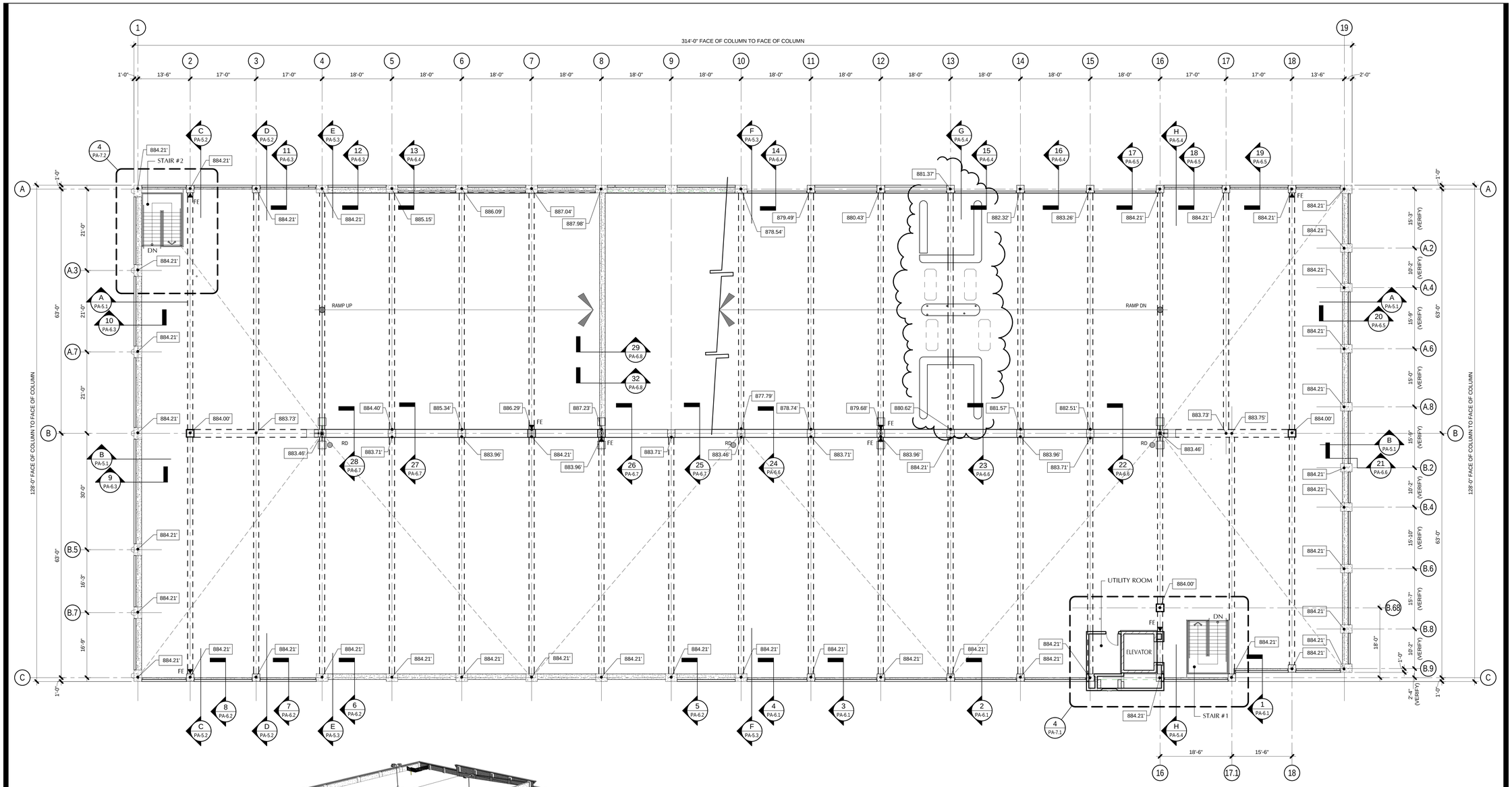

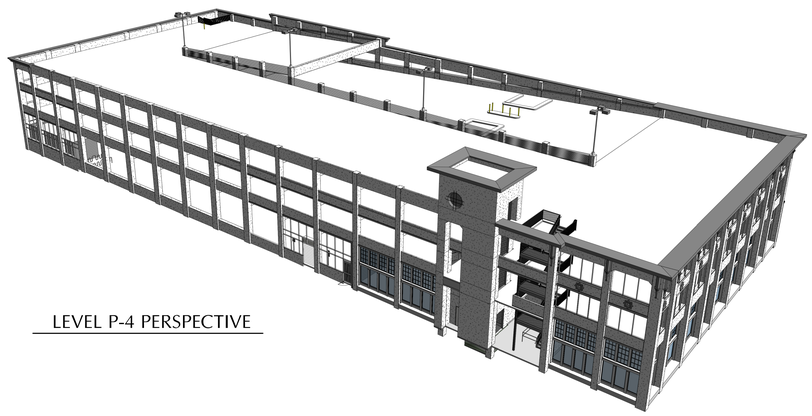

LEVEL P-4 PERSPECTIVE

PLAN NOTES

1. ALL ELEVATIONS ARE SHOWN TO THE TOP OF NOMINAL STRUCTURAL SLAB AND DO NOT ACCOUNT FOR THICKENED EDGES, TYP. U.N.O.
2. ALL EXPOSED EDGES OF PRECAST CONCRETE COLUMNS, BEAMS, GIRDERS, ETC., ARE TO RECEIVE A 3/4" CHAMFER, TYPICAL. ALL EXPOSED EDGES OF CONCRETE SPANDRELS TO RECEIVE AN EASED RADIUS EDGE.
3. E.D./R.D./T.D. INDICATES DRAINS, SEE DETAILS ON PA-8.3 AND PLUMBING DRAWINGS.
4. DSP INDICATES DRY STANDPIPE, SEE FIRE PROTECTION DRAWINGS.
5. ▶ INDICATES FIRE EXTINGUISHERS W/ CABINETS.
6. FIRE EXTINGUISHERS SHALL BE RATED MINIMUM 4A:80B:C
7. PROVIDE SIGNAGE AT EACH FIRE EXTINGUISHER LOCATION PER THE LOCAL FIRE AUTHORITY.
8. IT IS THE CONTRACTOR'S RESPONSIBILITY TO MAINTAIN THE REQUIRED CLEARANCES BELOW THE BOTTOM OF STRUCT'L, ARCH'L, MECH'L & ELECT'L ELEMENTS TO THE TOP OF THE SLAB BELOW.
9. CLEARANCES SHALL BE 8'-2" (MINIMUM) BELOW THE SLAB SOFFITS AND FIXTURES IN THE DRIVE AISLES LEADING TO DISABLED PARKING SPACES AND AT ALL DISABLED PARKING SPACES. CLEARANCES SHALL BE 8'-2" (MINIMUM) BELOW THE SLAB SOFFITS AND FIXTURES AT ALL OTHER DRIVE AISLES AND PARKING SPACES.
10. VERIFY ALL SLAB AND WALL OPENINGS WITH THE PLUMBING, FIRE PROTECTION AND ELECTRICAL DRAWINGS.
11. VERIFY ALL PIPE SLEEVES W/ THE PLUMBING OR FIRE PROTECTION SUBCONTRACTORS PRIOR TO POURING OF BEAMS OR GIRDERS.
12. SEE THE ENLARGED STAIR PLANS & DETAILS FOR ADDITIONAL INFORMATION REGARDING HANDRAILS, BOLLARDS, EMBEDS, ETC.
13. (XXX.XX) INDICATES GRADE/SURFACE ELEVATION PROVIDED BY CIVIL ENGINEER.
14. [XXX.XX] INDICATES FLOOR ELEVATION.

PROJECT NORTH

1 / PA-3.4 LEVEL P-4 FLOOR PLAN

3/32" = 1'-0"

Bayley Construction
3730 S. Susan St.
Suite 200
Santa Ana, CA. 92704
CA. License 734880
Tel 714-540-8863
Fax 714-556-8863

Bayley Construction
8005 S.E. 28th St.
P.O. Box 9004
Mercer Island, WA. 98040
WA. License BAYLECO343C
Tel 206-621-8884
Fax 206-343-7728

Pacific Parking DESIGN
6 Venture, Suite 275 949.341.0066 t
Irvine, California 92618 949.341.0099 f

DLR Group WWCOT
Architecture Engineering Planning Interiors
4280 Latham Street, Suite H 951.682.0470 t
Riverside, California 92501 951.682.1801 f

LICENSED ARCHITECT SCOTT BRAYTON BERMAN C-22700 EXP. 9-30-13 STATE OF CALIFORNIA

Public Agency Submittal:
Issued for Bidding:
Issued for Construction:

#	Revisions:
A	09.15.2011 PERMIT SET

PHASE II: FOX ENTERTAINMENT PLAZA: PARKING GARAGE

3601 Market Street
Riverside, CA 92501

CITY of RIVERSIDE

3900 Main Street, Riverside, CA 92522

Phase:
Revised 04.19.2011
PPD Project № 10-101

LEVEL P-4 FLOOR PLAN

Issued Date: 05.02.2011
Drawn By: RTR
Checked By: SBH

PA-3.4
Sheet №

File Path & Name: C:\Dimension Z\PPD\Projects\2009 - Fox Plaza Parking Structure (Bayley)\Fox PPD Revit\PPD Fox Theater Parking Garage_Owner.rvt
© WWCOT 2009 – Plotted 9/13/2011 10:31:00 AM

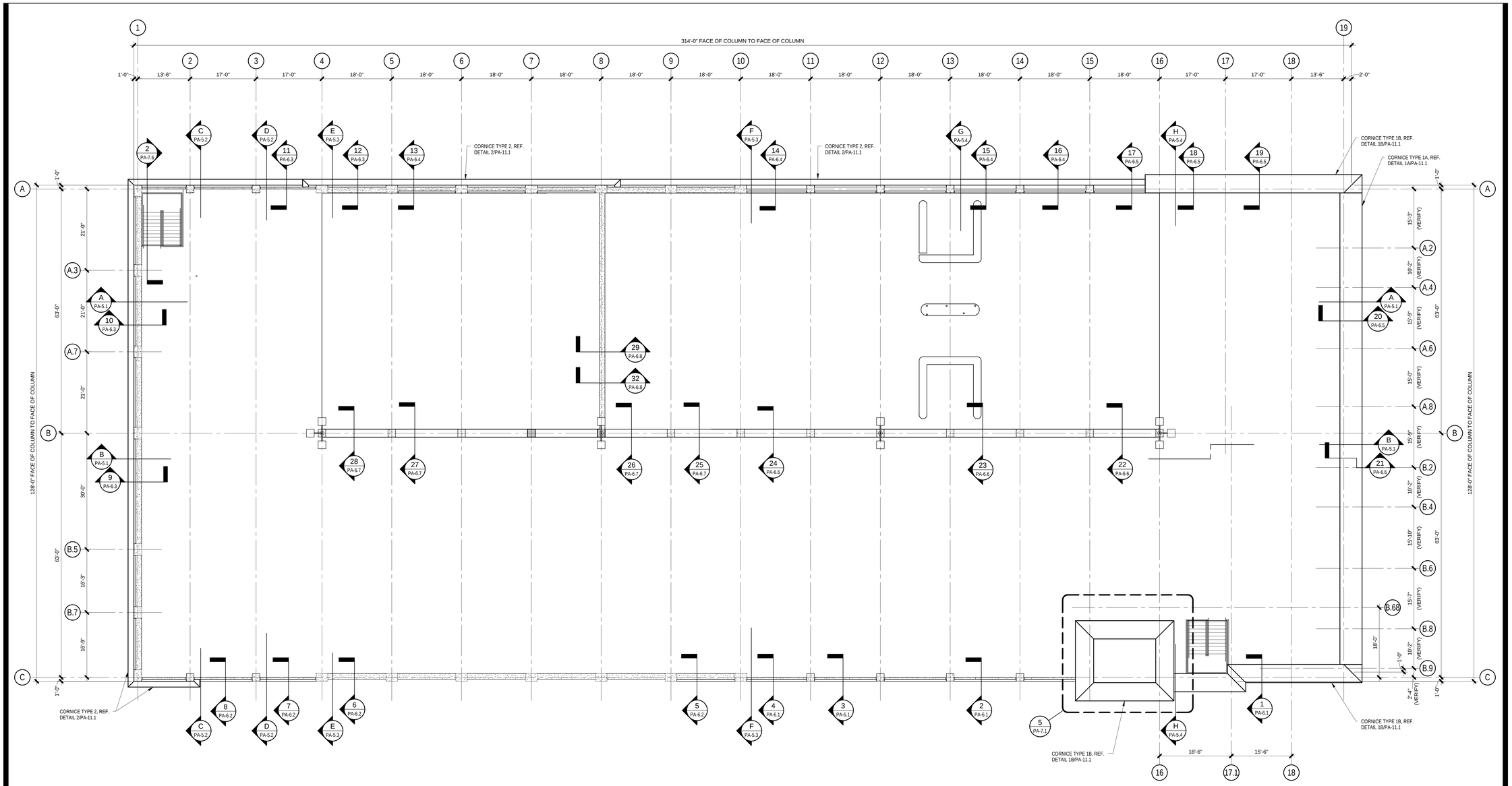

1 PA-3.5 LEVEL P-4 CORNICE & HOISTWAY ROOF PLAN

3/32" = 1'-0"

PROJECT NORTH

Bayley Construction
3730 S. Susan St.
Suite 200
Santa Ana, CA. 92704
CA. License 734880
Tel 714-540-8863
Fax 714-556-8863

Bayley Construction
8005 S.E. 28th St.
P.O. Box 9004
Mercer Island, WA. 98040
WA. License BAYLECO343JC
Tel 206-621-8884
Fax 206-343-7728

Pacific Parking DESIGN
6 Venture, Suite 275 949.341.0066 t
Irvine, California 92618 949.341.0099 f

DLR Group WWCOT
Architecture Engineering Planning Interiors
4280 Latham Street, Suite H 951.682.0470 t
Riverside, California 92501 951.682.1801 f

LICENSED ARCHITECT SCOTT BRAYTON BERMAN C-22700 EXP. 9-30-13 STATE OF CALIFORNIA

Public Agency Submittal:
Issued for Bidding:
Issued for Construction:

Revisions:

A 09.15.2011 PERMIT SET

PHASE II: FOX ENTERTAINMENT PLAZA: PARKING GARAGE

3601 Market Street
Riverside, CA 92501

CITY of RIVERSIDE

CITY OF RIVERSIDE

3900 Main Street, Riverside, CA 92522

Phase:
Revised 04.19.2011
PPD Project № 10-101

LEVEL P-4 CORNICE and HOISTWAY ROOF PLAN

Issued Date: 05.02.2011
Drawn By: RTR
Checked By: SBH

PA-3.5

Sheet №

File Path & Name: C:\Dimension Z\PPD\Projects\2009 - Fox Plaza Parking Structure (Bayley)\Fox PPD Revit\PPD Fox Theater Parking Garage_Owner.rvt
© WWCOT 2009 – Plotted 9/13/2011 10:31:34 AM

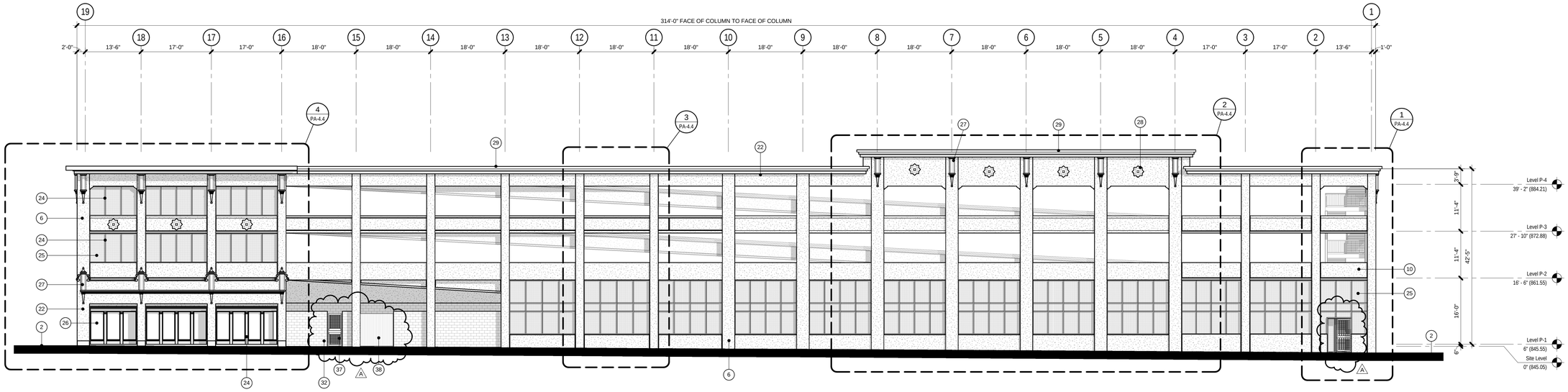

1A PA-4.1 NORTH BUILDING ELEVATION (FINISH)

3/32" = 1'-0"

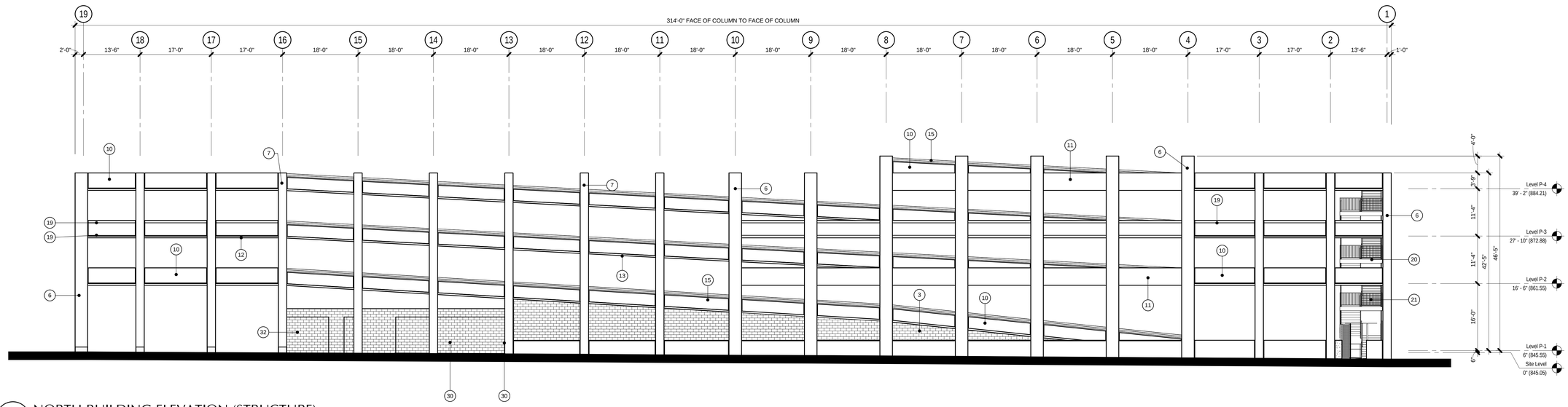

1 PA-4.1 NORTH BUILDING ELEVATION (STRUCTURE)

3/32" = 1'-0"

PAINT SCHEDULE

THE FOLLOWING SURFACES ARE TO RECEIVE PAINT - COLORS TO BE VERIFIED/COORDINATED WITH DLR/WWCOT

1. EXTERIOR CONCRETE SPANDRELS and BEAMS ..... (TOP & EXTERIOR SURFACE, BOTTOM SURFACE OF DOWNTURNED BEAMS)
2. EXTERIOR CONCRETE COLUMNS ..... (ALL INTERIOR & EXTERIOR SURFACES EXPOSED TO VIEW)
3. EXTERIOR CONCRETE SLAB EDGES ..... (TOP EDGE TO FACE OF SPANDREL, FACE OF SLAB AND SLAB SOFFIT TO DRIP REVEAL)
4. INTERIOR CONCRETE COLUMNS ..... (NOT SCHEDULED TO BE PAINTED)
5. INTERIOR CONCRETE BEAMS AND SLAB SOFFITS ..... (NOT SCHEDULED TO BE PAINTED)
6. METAL STAIRS ..... (ALL SURFACES EXPOSED TO VIEW)
7. METAL HANDRAILS & GUARDRAILS ..... (ALL SURFACES EXPOSED TO VIEW)
8. HOLLOW METAL DOORS AND FRAMES ..... (ALL SURFACES EXPOSED TO VIEW - INCLUDING LOUVERS)
9. MISCELLANEOUS METALS ..... (ALL SURFACES EXPOSED TO VIEW - EXCLUDING GALVANIZED BARRIER CABLES)
10. CMU WALLS (EXTERIOR AND ADJACENT TO EXTERIOR) ..... (ALL SURFACES EXPOSED TO VIEW)
11. CMU WALLS (INTERIOR) ..... (NOT SCHEDULED TO BE PAINTED)
12. CMU ELEVATOR HOISTWAY WALLS ..... (ALL SURFACES EXPOSED TO VIEW)
13. CAST-IN-PLACE WALLS (INTERIOR) ..... (NOT SCHEDULED TO BE PAINTED)
14. EXTERIOR CEMENT PLASTER WALLS ..... (ALL SURFACES EXPOSED TO VIEW)

MARK	KEYNOTE DESCRIPTION
1	CONCRETE FOOTING (REF. STRUCT'L. DRAWINGS)
2	GRADE/FINISHED EXTERIOR SURFACE (REF. CIVIL DRAWINGS)
3	CMU RETAINING WALL (REF. STRUCT'L DRAWINGS)
4	CONCRETE FLOOR SLAB ON GRADE
5	CONCRETE RAMP SLAB ON GRADE
6	CAST-IN-PLACE CONCRETE MOMENT FRAME COLUMN
7	CAST-IN-PLACE CONCRETE GRAVITY COLUMN
8	CAST-IN-PLACE CONCRETE GIRDER
9	CAST-IN-PLACE CONCRETE BEAM
10	CAST-IN-PLACE CONCRETE SPANDREL
11	CAST-IN-PLACE CONCRETE MOMENT FRAME BEAM
12	ELEVATED CONCRETE FLOOR SLAB
13	ELEVATED CONCRETE RAMP SLAB
14	CMU HOISTWAY
15	GALVANIZED BARRIER CABLES
16	BARRIER BEAM ASSEMBLY (REF. A-10 SHEETS)
17	SIGNAGE (REF. A-10 SHEETS)
19	REVEAL
20	CONCRETE FILLED, METAL PAN STAIRS (PAINTED)
21	METAL GUARDRAIL (PAINTED)

MARK	KEYNOTE DESCRIPTION
22	METAL STUD & PLASTER WALL
24	METAL FRAMED FACADE
25	METAL SCREENED FACADE
26	STOREFRONT FRAMING with GLAZING (MATCH EXISTING THEATRE)
27	DECORATIVE LANTERN - FOAM (MATCH EXISTING THEATRE)
28	MEDALLION - FOAM (MATCH EXISTING THEATRE)
29	METAL STUD and EIFS CORNICE
30	METAL DOOR (PAINTED)
31	ADJACENT STRUCTURE
32	CMU WALL (REF. STRUCT'L DRAWINGS)
33	CONCRETE-FILLED STEEL PIPE BOLLARD
34	DECORATIVE METAL
35	UPTURNED CAST-IN-PLACE CONCRETE SPANDREL BEAM
36	STAIR COLUMN
37	PEDESTRIAN GATE WITH PANIC HARDWARE (PAINTED)
38	METAL SLIDING TRASH ENCLOSURE GATE (PAINTED)
39	CONCRETE-FILLED METAL DECK
40	METAL HANDRAIL (PAINTED)
41	CONCRETE STAIRS OVER FOAM (REF. STRUCT'L DRAWINGS)

A

VERTICAL CLEARANCE

THE VERTICAL DIMENSION FROM THE FINISH FLOOR TO THE UNDERSIDE OF ANY STRUCTURAL ELEMENT, PIPING, ELECTRICAL FIXTURE ETC. SHALL BE:

8'-2" MINIMUM IN PARKING STALL AREAS AND 8'-2" MINIMUM AT DRIVE AISLES - ALL LEVELS

AT EACH VEHICULAR ENTRANCE: PROVIDE DISABLED ACCESS AUTHORIZATION SIGNS.

Bayley Construction
3730 S. Susan St.
Suite 200
Santa Ana, CA. 92704
CA. License 734880
Tel 714-540-8863
Fax 714-556-8863

Bayley Construction
8005 S.E. 28th St.
P.O. Box 9004
Mercer Island, WA. 98040
WA. License BAYLECO343JC
Tel 206-621-8884
Fax 206-343-7728

Pacific Parking DESIGN
6 Venture, Suite 275 949.341.0066 t
Irvine, California 92618 949.341.0099 f

DLR Group WWCOT
Architecture Engineering Planning Interiors
4280 Latham Street, Suite H 951.682.0470 t
Riverside, California 92501 951.682.1801 f

LICENSED ARCHITECT SCOTT BRAYTON BERMAN C-22700 EXP. 9-30-13 STATE OF CALIFORNIA

Public Agency Submittal:
Issued for Bidding:
Issued for Construction:

Revisions:

A 09.15.2011 PERMIT SET

PHASE II: FOX ENTERTAINMENT PLAZA: PARKING GARAGE

3601 Market Street
Riverside, CA 92501

CITY of RIVERSIDE

CITY OF RIVERSIDE

3900 Main Street, Riverside, CA 92522

Phase:
Revised 04.19.2011
PPD Project № 10-101

NORTH BUILDING ELEVATIONS

Issued Date: 05.02.2011
Drawn By: RTR
Checked By: SBH

PA-4.1

Sheet №

File Path & Name: C:\Dimension Z\PPD\Projects\2009 - Fox Plaza Parking Structure (Bayley)\Fox PPD Revit\PPD Fox Theater Parking Garage_Owner.rvt
© WWCOT 2009 -- Plotted: 9/13/2011 10:32:16 AM

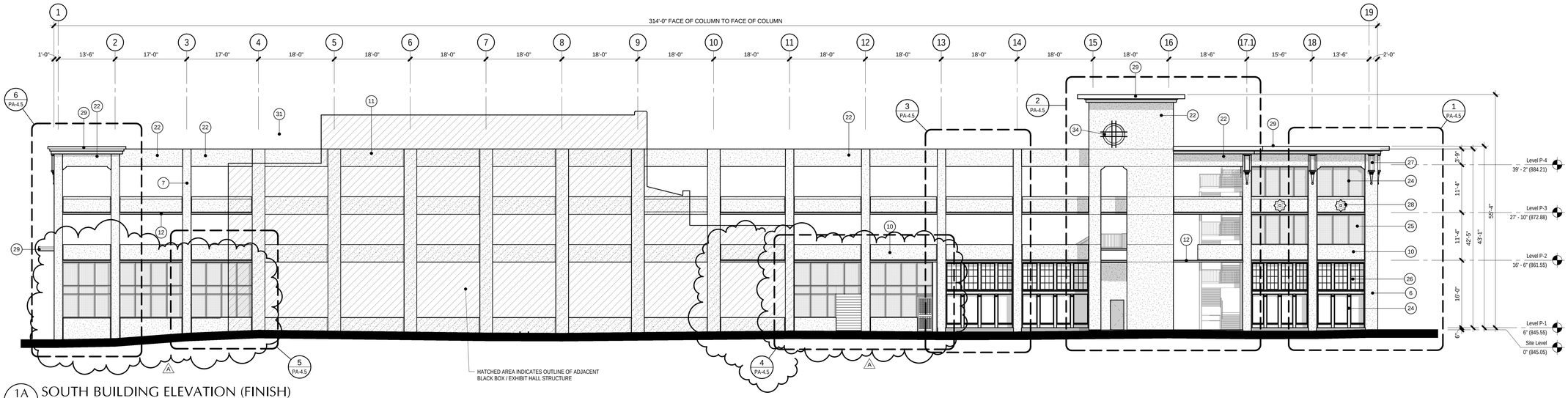

1A PA-4.2 SOUTH BUILDING ELEVATION (FINISH)

3/32" = 1'-0"

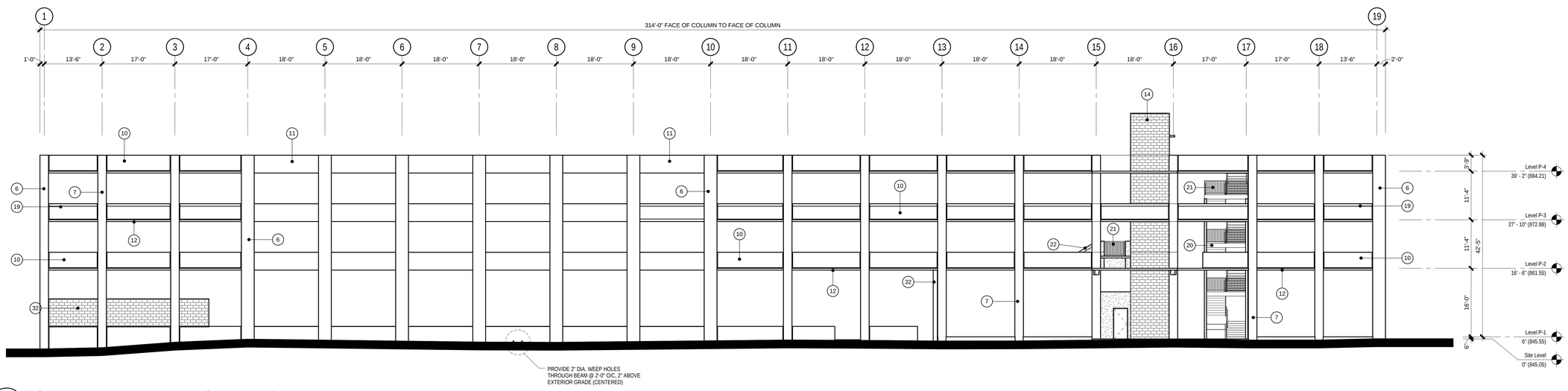

1 PA-4.2 SOUTH BUILDING ELEVATION (STRUCTURE)

3/32" = 1'-0"

PAINT SCHEDULE

THE FOLLOWING SURFACES ARE TO RECEIVE PAINT - COLORS TO BE VERIFIED/COORDINATED WITH DLR/WWCOT

1. EXTERIOR CONCRETE SPANDRELS and BEAMS . . . . . (TOP & EXTERIOR SURFACE, BOTTOM SURFACE OF DOWNTURNED BEAMS)
2. EXTERIOR CONCRETE COLUMNS . . . . . (ALL INTERIOR & EXTERIOR SURFACES EXPOSED TO VIEW)
3. EXTERIOR CONCRETE SLAB EDGES . . . . . (TOP EDGE TO FACE OF SPANDREL, FACE OF SLAB AND SLAB SOFFIT TO DRIP REVEAL)
4. INTERIOR CONCRETE COLUMNS . . . . . (NOT SCHEDULED TO BE PAINTED)
5. INTERIOR CONCRETE BEAMS AND SLAB SOFFITS . . . . . (NOT SCHEDULED TO BE PAINTED)
6. METAL STAIRS . . . . . (ALL SURFACES EXPOSED TO VIEW)
7. METAL HANDRAILS & GUARDRAILS . . . . . (ALL SURFACES EXPOSED TO VIEW)
8. HOLLOW METAL DOORS AND FRAMES . . . . . (ALL SURFACES EXPOSED TO VIEW - INCLUDING LOUVERS)
9. MISCELLANEOUS METALS . . . . . (ALL SURFACES EXPOSED TO VIEW - EXCLUDING GALVANIZED BARRIER CABLES)
10. CMU WALLS (EXTERIOR AND ADJACENT TO EXTERIOR) . . . . (ALL SURFACES EXPOSED TO VIEW)
11. CMU WALLS (INTERIOR) . . . . . (NOT SCHEDULED TO BE PAINTED)
12. CMU ELEVATOR HOISTWAY WALLS . . . . . (ALL SURFACES EXPOSED TO VIEW)
13. CAST-IN-PLACE WALLS (INTERIOR) . . . . . (NOT SCHEDULED TO BE PAINTED)
14. EXTERIOR CEMENT PLASTER WALLS . . . . . (ALL SURFACES EXPOSED TO VIEW)

MARK	KEYNOTE DESCRIPTION
1	CONCRETE FOOTING (REF. STRUCT'L. DRAWINGS)
2	GRADE/FINISHED EXTERIOR SURFACE (REF. CIVIL DRAWINGS)
3	CMU RETAINING WALL (REF. STRUCT'L DRAWINGS)
4	CONCRETE FLOOR SLAB ON GRADE
5	CONCRETE RAMP SLAB ON GRADE
6	CAST-IN-PLACE CONCRETE MOMENT FRAME COLUMN
7	CAST-IN-PLACE CONCRETE GRAVITY COLUMN
8	CAST-IN-PLACE CONCRETE GIRDER
9	CAST-IN-PLACE CONCRETE BEAM
10	CAST-IN-PLACE CONCRETE SPANDREL
11	CAST-IN-PLACE CONCRETE MOMENT FRAME BEAM
12	ELEVATED CONCRETE FLOOR SLAB
13	ELEVATED CONCRETE RAMP SLAB
14	CMU HOISTWAY
15	GALVANIZED BARRIER CABLES
16	BARRIER BEAM ASSEMBLY (REF. A-10 SHEETS)
17	SIGNAGE (REF. A-10 SHEETS)
19	REVEAL
20	CONCRETE FILLED, METAL PAN STAIRS (PAINTED)
21	METAL GUARDRAIL (PAINTED)

MARK	KEYNOTE DESCRIPTION
22	METAL STUD & PLASTER WALL
24	METAL FRAMED FACADE
25	METAL SCREENED FACADE
26	STOREFRONT FRAMING with GLAZING (MATCH EXISTING THEATRE)
27	DECORATIVE LANTERN - FOAM (MATCH EXISTING THEATRE)
28	MEDALLION - FOAM (MATCH EXISTING THEATRE)
29	METAL STUD and EIFS CORNICE
30	METAL DOOR (PAINTED)
31	ADJACENT STRUCTURE
32	CMU WALL (REF. STRUCT'L DRAWINGS)
33	CONCRETE-FILLED STEEL PIPE BOLLARD
34	DECORATIVE METAL
35	UPTURNED CAST-IN-PLACE CONCRETE SPANDREL BEAM
36	STAIR COLUMN
37	PEDESTRIAN GATE WITH PANIC HARDWARE (PAINTED)
38	METAL SLIDING TRASH ENCLOSURE GATE (PAINTED)
39	CONCRETE-FILLED METAL DECK
40	METAL HANDRAIL (PAINTED)
41	CONCRETE STAIRS OVER FOAM (REF. STRUCT'L DRAWINGS)

A

VERTICAL CLEARANCE

THE VERTICAL DIMENSION FROM THE FINISH FLOOR TO THE UNDERSIDE OF ANY STRUCTURAL ELEMENT, PIPING, ELECTRICAL FIXTURE ETC. SHALL BE:

8'-2" MINIMUM IN PARKING STALL AREAS AND 8'-2" MINIMUM AT DRIVE AISLES - ALL LEVELS

AT EACH VEHICULAR ENTRANCE: PROVIDE DISABLED ACCESS AUTHORIZATION SIGNS.

Bayley Construction
3730 S. Susan St.
Suite 200
Santa Ana, CA. 92704
CA. License 734880
Tel 714-540-8863
Fax 714-556-8863

Bayley Construction
8005 S.E. 28th St.
P.O. Box 9004
Mercer Island, WA. 98040
WA. License BAYLECO343JC
Tel 206-621-8884
Fax 206-343-7728

Pacific Parking DESIGN
6 Venture, Suite 275 949.341.0066 t
Irvine, California 92618 949.341.0099 f

DLR Group WWCOT
Architecture Engineering Planning Interiors
4280 Latham Street, Suite H 951.682.0470 t
Riverside, California 92501 951.682.1801 f

LICENSED ARCHITECT SCOTT BRAYTON BERMAN C-22700 EXP. 9-30-13 STATE OF CALIFORNIA

Public Agency Submittal:
Issued for Bidding:
Issued for Construction:

Revisions:

A 09.15.2011 PERMIT SET

PHASE II: FOX ENTERTAINMENT PLAZA: PARKING GARAGE

3601 Market Street
Riverside, CA 92501

CITY of RIVERSIDE

3900 Main Street, Riverside, CA 92522

Phase:
Revised 04.19.2011
PPD Project № 10-101

SOUTH BUILDING ELEVATIONS

Issued Date: 05.02.2011
Drawn By: RTR
Checked By: SBH

PA-4.2
Sheet №

File Path & Name: C:\Dimension Z\PPD\Projects\2009 - Fox Plaza Parking Structure (Bayley)\Fox PPD Revit\PPD Fox Theater Parking Garage_Owner.rvt
© WWCOT 2009 - Plotted 9/13/2011 10:33:00 AM

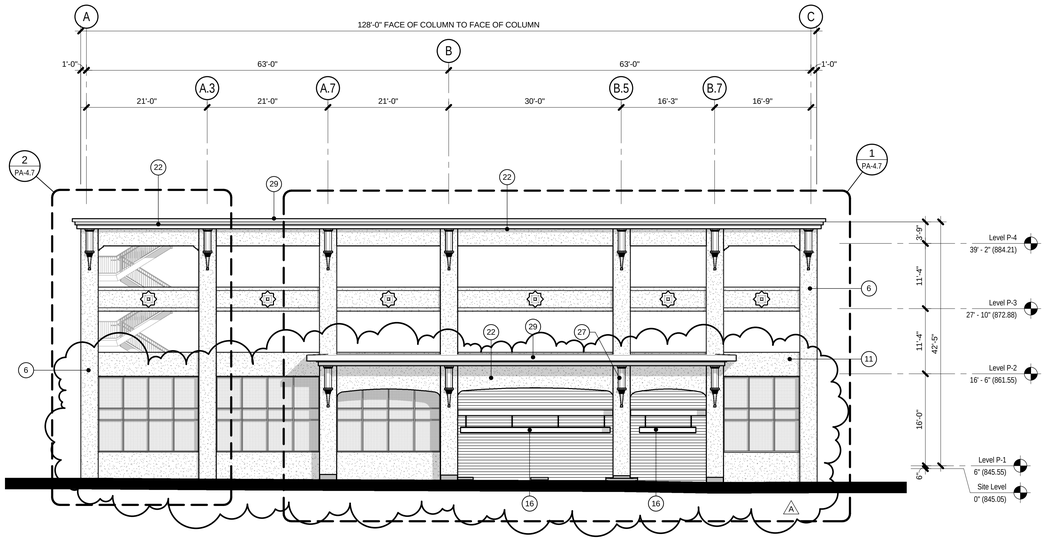

2A PA-4.3 WEST BUILDING ELEVATION (FINISH)

3/32" = 1'-0"

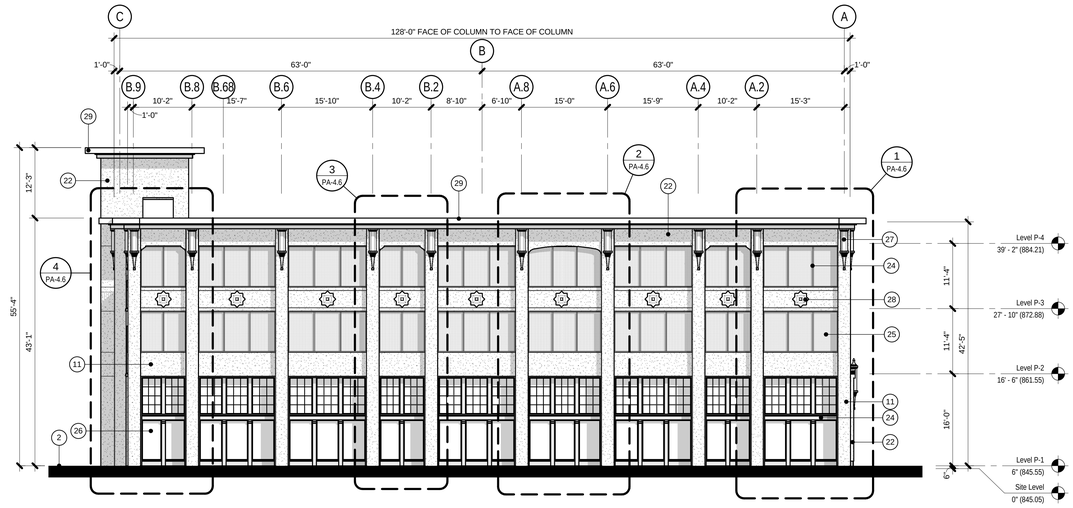

1A PA-4.3 EAST BUILDING ELEVATION (FINISH)

3/32" = 1'-0"

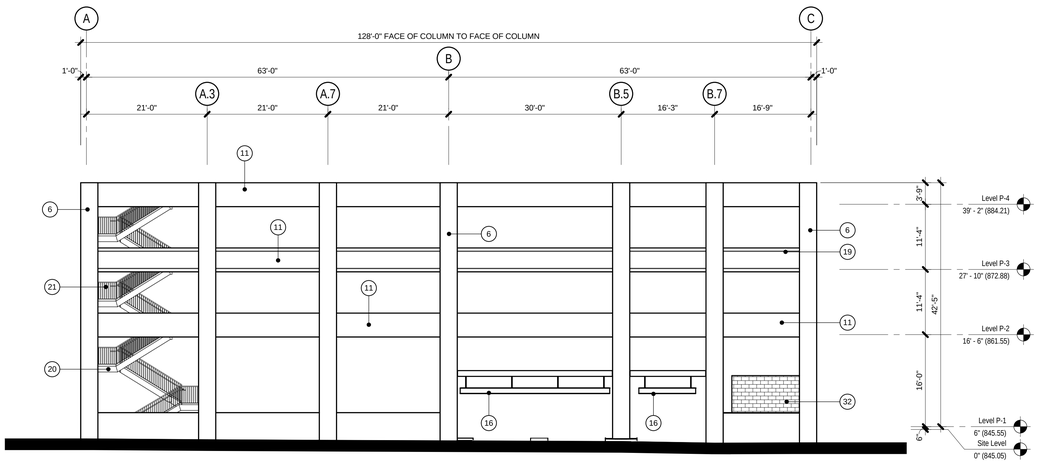

2 PA-4.3 WEST BUILDING ELEVATION (STRUCTURE)

3/32" = 1'-0"

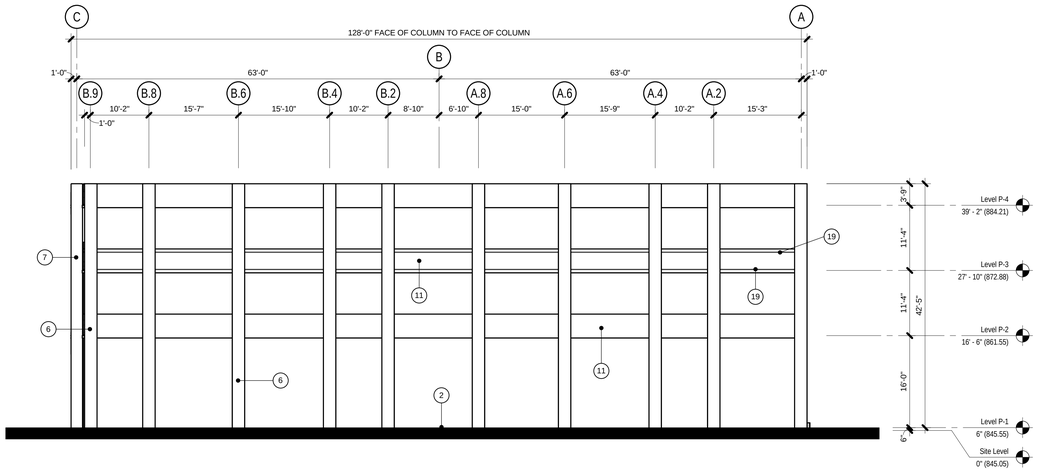

1 PA-4.3 EAST BUILDING ELEVATION (STRUCTURE)

3/32" = 1'-0"

VERTICAL CLEARANCE

THE VERTICAL DIMENSION FROM THE FINISH FLOOR TO THE UNDERSIDE OF ANY STRUCTURAL ELEMENT, PIPING, ELECTRICAL FIXTURE ETC. SHALL BE:

8'-2" MINIMUM IN PARKING STALL AREAS AND 8'-2" MINIMUM AT DRIVE AISLES - ALL LEVELS

AT EACH VEHICULAR ENTRANCE: PROVIDE DISABLED ACCESS AUTHORIZATION SIGNS.

PAINT SCHEDULE

THE FOLLOWING SURFACES ARE TO RECEIVE PAINT - COLORS TO BE VERIFIED/COORDINATED WITH DLR/WWCOT

1. EXTERIOR CONCRETE SPANDRELS and BEAMS . . . . . (TOP & EXTERIOR SURFACE, BOTTOM SURFACE OF DOWNTURNED BEAMS)
2. EXTERIOR CONCRETE COLUMNS . . . . . (ALL INTERIOR & EXTERIOR SURFACES EXPOSED TO VIEW)
3. EXTERIOR CONCRETE SLAB EDGES . . . . . (TOP EDGE TO FACE OF SPANDREL, FACE OF SLAB AND SLAB SOFFIT TO DRIP REVEAL)
4. INTERIOR CONCRETE COLUMNS . . . . . (NOT SCHEDULED TO BE PAINTED)
5. INTERIOR CONCRETE BEAMS AND SLAB SOFFITS . . . . . (NOT SCHEDULED TO BE PAINTED)
6. METAL STAIRS . . . . . (ALL SURFACES EXPOSED TO VIEW)
7. METAL HANDRAILS & GUARDRAILS . . . . . (ALL SURFACES EXPOSED TO VIEW)
8. HOLLOW METAL DOORS AND FRAMES . . . . . (ALL SURFACES EXPOSED TO VIEW - INCLUDING LOUVERS)
9. MISCELLANEOUS METALS . . . . . (ALL SURFACES EXPOSED TO VIEW - EXCLUDING GALVANIZED BARRIER CABLES)
10. CMU WALLS (EXTERIOR AND ADJACENT TO EXTERIOR) . . . . . (ALL SURFACES EXPOSED TO VIEW)
11. CMU WALLS (INTERIOR) . . . . . (NOT SCHEDULED TO BE PAINTED)
12. CMU ELEVATOR HOISTWAY WALLS . . . . . (ALL SURFACES EXPOSED TO VIEW)
13. CAST-IN-PLACE WALLS (INTERIOR) . . . . . (NOT SCHEDULED TO BE PAINTED)
14. EXTERIOR CEMENT PLASTER WALLS . . . . . (ALL SURFACES EXPOSED TO VIEW)

MARK	KEYNOTE DESCRIPTION
1	CONCRETE FOOTING (REF. STRUCT'L. DRAWINGS)
2	GRADE/FINISHED EXTERIOR SURFACE (REF. CIVIL DRAWINGS)
3	CMU RETAINING WALL (REF. STRUCT'L DRAWINGS)
4	CONCRETE FLOOR SLAB ON GRADE
5	CONCRETE RAMP SLAB ON GRADE
6	CAST-IN-PLACE CONCRETE MOMENT FRAME COLUMN
7	CAST-IN-PLACE CONCRETE GRAVITY COLUMN
8	CAST-IN-PLACE CONCRETE GIRDER
9	CAST-IN-PLACE CONCRETE BEAM
10	CAST-IN-PLACE CONCRETE SPANDREL
11	CAST-IN-PLACE CONCRETE MOMENT FRAME BEAM
12	ELEVATED CONCRETE FLOOR SLAB
13	ELEVATED CONCRETE RAMP SLAB
14	CMU HOISTWAY
15	GALVANIZED BARRIER CABLES
16	BARRIER BEAM ASSEMBLY (REF. A-10 SHEETS)
17	SIGNAGE (REF. A-10 SHEETS)
19	REVEAL
20	CONCRETE FILLED, METAL PAN STAIRS (PAINTED)
21	METAL GUARDRAIL (PAINTED)
22	METAL STUD & PLASTER WALL
24	METAL FRAMED FACADE
25	METAL SCREENED FACADE
26	STOREFRONT FRAMING with GLAZING (MATCH EXISTING THEATRE)
27	DECORATIVE LANTERN - FOAM (MATCH EXISTING THEATRE)
28	MEDALLION - FOAM (MATCH EXISTING THEATRE)
29	METAL STUD and EIFS CORNICE
30	METAL DOOR (PAINTED)
31	ADJACENT STRUCTURE
32	CMU WALL (REF. STRUCT'L DRAWINGS)
33	CONCRETE-FILLED STEEL PIPE BOLLARD
34	DECORATIVE METAL
35	UPTURNED CAST-IN-PLACE CONCRETE SPANDREL BEAM
36	STAIR COLUMN
37	PEDESTRIAN GATE WITH PANIC HARDWARE (PAINTED)
38	METAL SLIDING TRASH ENCLOSURE GATE (PAINTED)
39	CONCRETE-FILLED METAL DECK
40	METAL HANDRAIL (PAINTED)
41	CONCRETE STAIRS OVER FOAM (REF. STRUCT'L DRAWINGS)

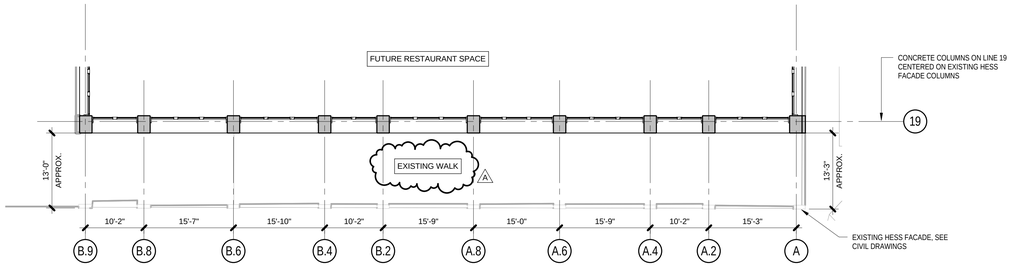

1B PA-4.3 PARTIAL P-1 LEVEL FLOOR PLAN at FUTURE RESTAURANT SPACE / EXISTING HESS FACADE

3/32" = 1'-0"

Bayley Construction
3730 S. Susan St.
Suite 200
Santa Ana, CA. 92704
CA. License 734880
Tel 714-540-8863
Fax 714-556-8863

Bayley Construction
8005 S.E. 28th St.
P.O. Box 9004
Mercer Island, WA. 98040
WA. License BAYLECO343JC
Tel 206-621-8884
Fax 206-343-7728

Pacific Parking DESIGN
6 Venture, Suite 275 949.341.0066 t
Irvine, California 92618 949.341.0099 f

DLR Group WWCOT
Architecture Engineering Planning Interiors
4280 Latham Street, Suite H 951.682.0470 t
Riverside, California 92501 951.682.1801 f

LICENSED ARCHITECT
SCOTT BRAYTON BERMAN
C-22700
EXP. 9-30-13
STATE OF CALIFORNIA

Public Agency Submittal:
Issued for Bidding:
Issued for Construction:

Revisions:

A 09.15.2011 PERMIT SET

PHASE II: FOX ENTERTAINMENT PLAZA: PARKING GARAGE

3601 Market Street
Riverside, CA 92501

CITY of RIVERSIDE

CITY OF RIVERSIDE
3900 Main Street, Riverside, CA 92522

Phase:
Revised 04.19.2011
PPD Project № 10-101

EAST and WEST BUILDING ELEVATIONS

Issued Date: 05.02.2011
Drawn By: RTR
Checked By: SBH

PA-4.3

Sheet №

File Path & Name: C:\Dimension Z\PPD\Projects\2009 - Fox Plaza Parking Structure (Bayley)\Fox PPD Revit\PPD Fox Theater Parking Garage_Owner.rvt
© WWCOT 2009 - Plotted 9/13/2011 10:33:41 AM

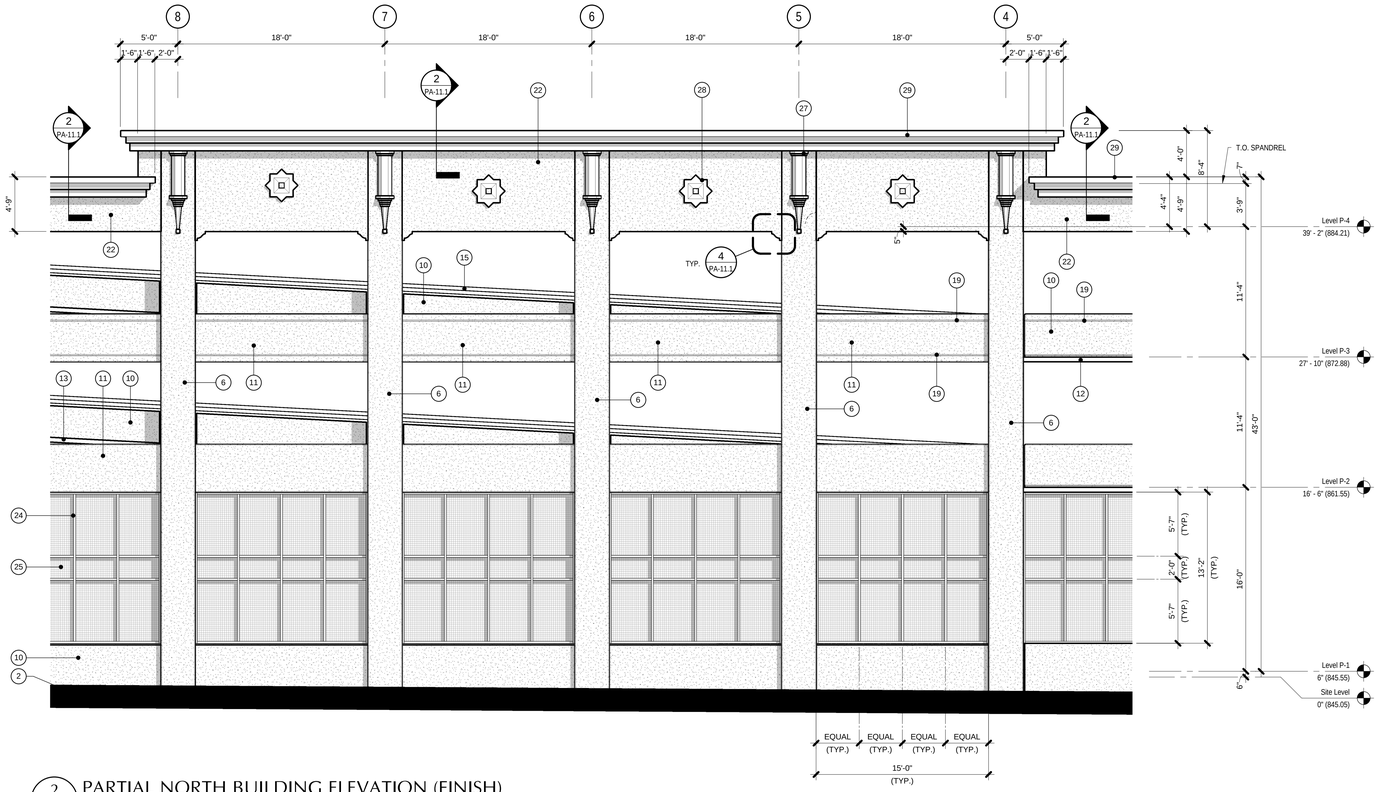

2 PA-4.4 PARTIAL NORTH BUILDING ELEVATION (FINISH)
3/16" = 1'-0"

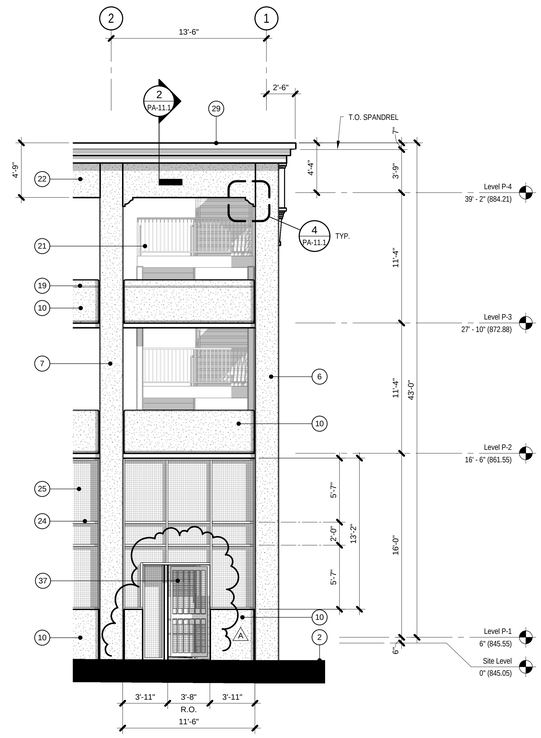

1 PA-4.4 PARTIAL NORTH BUILDING ELEVATION (FINISH)
3/16" = 1'-0"

4 PA-4.4 PARTIAL NORTH BUILDING ELEVATION (FINISH)
3/16" = 1'-0"

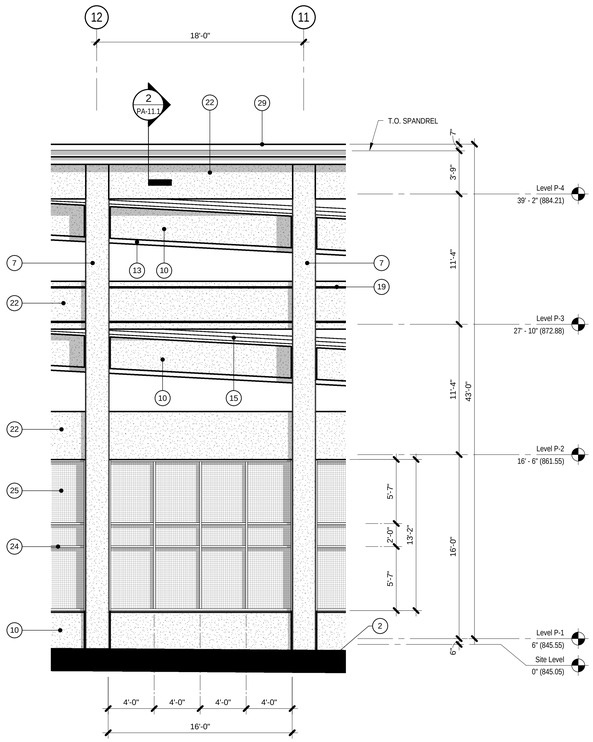

3 PA-4.4 PARTIAL NORTH BUILDING ELEVATION (FINISH)
3/16" = 1'-0"

MARK	KEYNOTE DESCRIPTION
1	CONCRETE FOOTING (REF. STRUCT'L. DRAWINGS)
2	GRADE/FINISHED EXTERIOR SURFACE (REF. CIVIL DRAWINGS)
3	CMU RETAINING WALL (REF. STRUCT'L DRAWINGS)
4	CONCRETE FLOOR SLAB ON GRADE
5	CONCRETE RAMP SLAB ON GRADE
6	CAST-IN-PLACE CONCRETE MOMENT FRAME COLUMN
7	CAST-IN-PLACE CONCRETE GRAVITY COLUMN
8	CAST-IN-PLACE CONCRETE GIRDER
9	CAST-IN-PLACE CONCRETE BEAM
10	CAST-IN-PLACE CONCRETE SPANDREL
11	CAST-IN-PLACE CONCRETE MOMENT FRAME BEAM
12	ELEVATED CONCRETE FLOOR SLAB
13	ELEVATED CONCRETE RAMP SLAB
14	CMU HOISTWAY
15	GALVANIZED BARRIER CABLES
16	BARRIER BEAM ASSEMBLY (REF. A-10 SHEETS)
17	SIGNAGE (REF. A-10 SHEETS)
19	REVEAL
20	CONCRETE FILLED, METAL PAN STAIRS (PAINTED)
21	METAL GUARDRAIL (PAINTED)
22	METAL STUD & PLASTER WALL
24	METAL FRAMED FACADE
25	METAL SCREENED FACADE
26	STOREFRONT FRAMING with GLAZING (MATCH EXISTING THEATRE)
27	DECORATIVE LANTERN - FOAM (MATCH EXISTING THEATRE)
28	MEDALLION - FOAM (MATCH EXISTING THEATRE)
29	METAL STUD and EIFS CORNICE A
30	METAL DOOR (PAINTED)
31	ADJACENT STRUCTURE
32	CMU WALL (REF. STRUCT'L DRAWINGS)
33	CONCRETE-FILLED STEEL PIPE BOLLARD
34	DECORATIVE METAL
35	UPTURNED CAST-IN-PLACE CONCRETE SPANDREL BEAM
36	STAIR COLUMN
37	PEDESTRIAN GATE WITH PANIC HARDWARE (PAINTED)
38	METAL SLIDING TRASH ENCLOSURE GATE (PAINTED)
39	CONCRETE-FILLED METAL DECK
40	METAL HANDRAIL (PAINTED)
41	CONCRETE STAIRS OVER FOAM (REF. STRUCT'L DRAWINGS)

Bayley Construction
3730 S. Susan St.
Suite 200
Santa Ana, CA. 92704
CA. License 734880
Tel 714-540-8863
Fax 714-556-8863

Bayley Construction
8005 S.E. 28th St.
P.O. Box 9004
Mercer Island, WA. 98040
WA. License BAYLECO343JC
Tel 206-621-8884
Fax 206-343-7728

Pacific Parking DESIGN
6 Venture, Suite 275 949.341.0066 t
Irvine, California 92618 949.341.0099 f

DLR Group WWCOT
Architecture Engineering Planning Interiors
4280 Latham Street, Suite H 951.682.0470 t
Riverside, California 92501 951.682.1801 f

LICENSED ARCHITECT SCOTT BRAYTON BERMAN C-22700 EXP. 9-30-13 STATE OF CALIFORNIA

Public Agency Submittal:
Issued for Bidding:
Issued for Construction:

Revisions:

A 09.15.2011 PERMIT SET

PHASE II: FOX ENTERTAINMENT PLAZA: PARKING GARAGE

3601 Market Street
Riverside, CA 92501

CITY of RIVERSIDE

3900 Main Street, Riverside, CA 92522

Phase:
Revised 04.19.2011
PPD Project № 10-101

ENLARGED BUILDING ELEVATIONS (NORTH)

Issued Date: 05.02.2011
Drawn By: RTR
Checked By: SBH

PA-4.4

Sheet №

File Path & Name: C:\Dimension Z\PPD\Projects\2009 - Fox Plaza Parking Structure (Bayley)\Fox PPD Revit\PPD Fox Theater Parking Garage_Owner.rvt
© WWCOT 2009 – Plotted 9/13/2011 10:36:15 AM

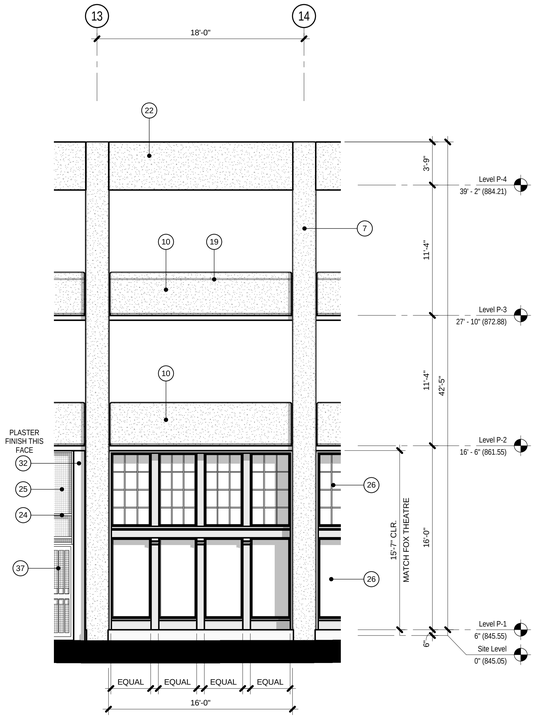

3 PA-4.5 PARTIAL SOUTH BUILDING ELEVATION (FINISH)
3/16" = 1'-0"

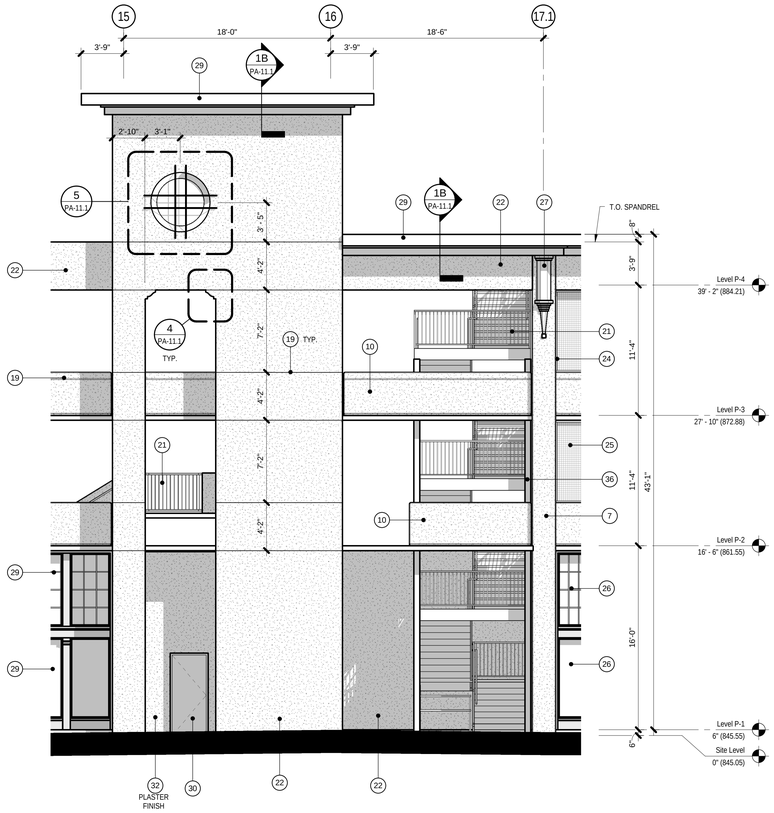

2 PA-4.5 PARTIAL SOUTH BUILDING ELEVATION (FINISH)
3/16" = 1'-0"

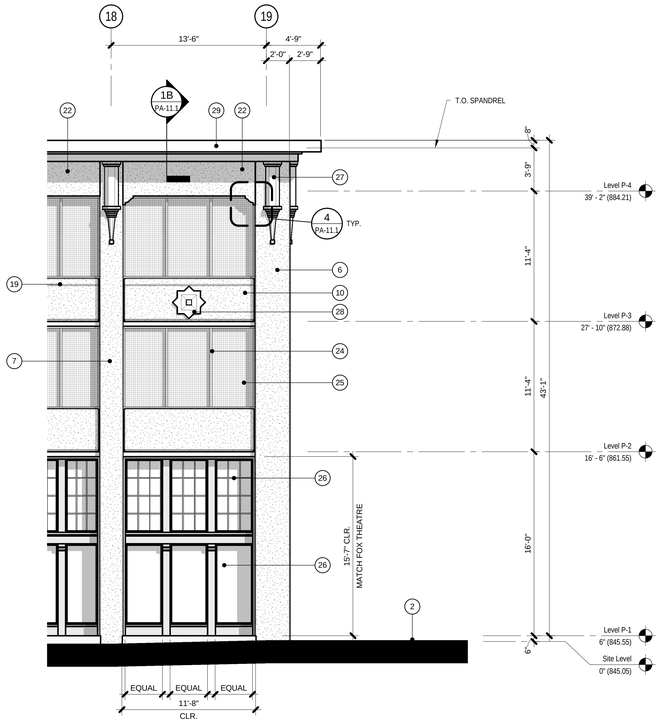

1 PA-4.5 PARTIAL SOUTH BUILDING ELEVATION (FINISH)
3/16" = 1'-0"

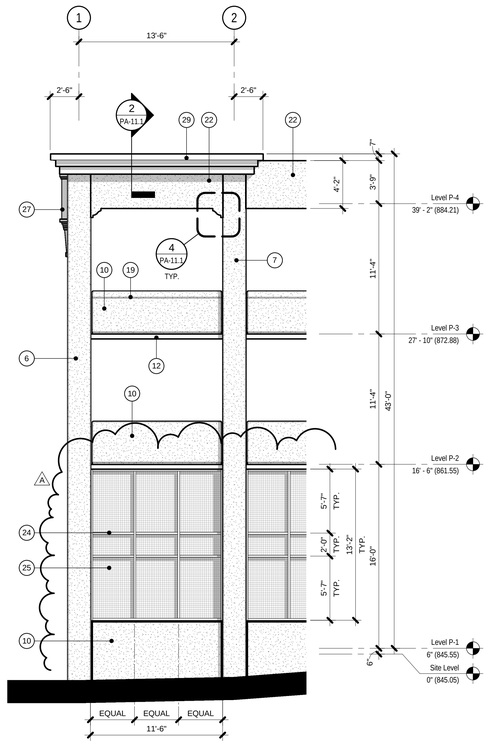

6 PA-4.5 PARTIAL SOUTH BUILDING ELEVATION (FINISH)
3/16" = 1'-0"

MARK	KEYNOTE DESCRIPTION
1	CONCRETE FOOTING (REF. STRUCT'L. DRAWINGS)
2	GRADE/FINISHED EXTERIOR SURFACE (REF. CIVIL DRAWINGS)
3	CMU RETAINING WALL (REF. STRUCT'L DRAWINGS)
4	CONCRETE FLOOR SLAB ON GRADE
5	CONCRETE RAMP SLAB ON GRADE
6	CAST-IN-PLACE CONCRETE MOMENT FRAME COLUMN
7	CAST-IN-PLACE CONCRETE GRAVITY COLUMN
8	CAST-IN-PLACE CONCRETE GIRDER
9	CAST-IN-PLACE CONCRETE BEAM
10	CAST-IN-PLACE CONCRETE SPANDREL
11	CAST-IN-PLACE CONCRETE MOMENT FRAME BEAM
12	ELEVATED CONCRETE FLOOR SLAB
13	ELEVATED CONCRETE RAMP SLAB
14	CMU HOISTWAY
15	GALVANIZED BARRIER CABLES
16	BARRIER BEAM ASSEMBLY (REF. A-10 SHEETS)
17	SIGNAGE (REF. A-10 SHEETS)
19	REVEAL
20	CONCRETE FILLED, METAL PAN STAIRS (PAINTED)
21	METAL GUARDRAIL (PAINTED)
22	METAL STUD & PLASTER WALL
24	METAL FRAMED FACADE
25	METAL SCREENED FACADE
26	STOREFRONT FRAMING with GLAZING (MATCH EXISTING THEATRE)
27	DECORATIVE LANTERN - FOAM (MATCH EXISTING THEATRE)
28	MEDALLION - FOAM (MATCH EXISTING THEATRE)
29	METAL STUD and EIFS CORNICE
30	METAL DOOR (PAINTED)
31	ADJACENT STRUCTURE
32	CMU WALL (REF. STRUCT'L DRAWINGS)
33	CONCRETE-FILLED STEEL PIPE BOLLARD
34	DECORATIVE METAL
35	UPTURNED CAST-IN-PLACE CONCRETE SPANDREL BEAM
36	STAIR COLUMN
37	PEDESTRIAN GATE WITH PANIC HARDWARE (PAINTED)
38	METAL SLIDING TRASH ENCLOSURE GATE (PAINTED)
39	CONCRETE-FILLED METAL DECK
40	METAL HANDRAIL (PAINTED)
41	CONCRETE STAIRS OVER FOAM (REF. STRUCT'L DRAWINGS)

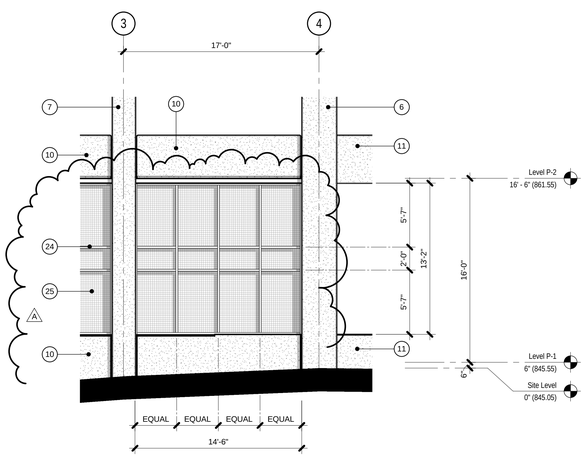

5 PA-4.5 PARTIAL SOUTH BUILDING ELEVATION (FINISH)
3/16" = 1'-0"

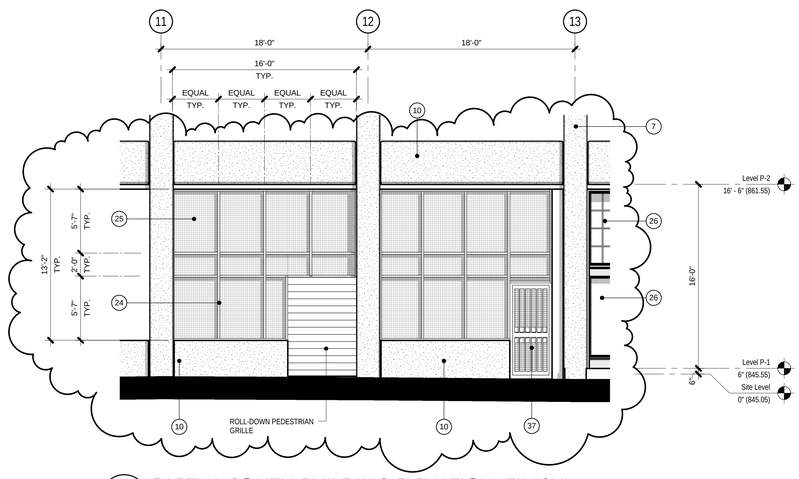

4 PA-4.5 PARTIAL SOUTH BUILDING ELEVATION (FINISH)
3/16" = 1'-0"

Bayley Construction
3730 S. Susan St.
Suite 200
Santa Ana, CA. 92704
CA. License 734880
Tel 714-540-8863
Fax 714-556-8863

Bayley Construction
8005 S.E. 28th St.
P.O. Box 9004
Mercer Island, WA. 98040
WA. License BAYLEC0343JC
Tel 206-621-8884
Fax 206-343-7728

BAYLEY CONSTRUCTION

Pacific Parking DESIGN
6 Venture, Suite 275 949.341.0066 t
Irvine, California 92618 949.341.0099 f

DLR Group WWCOT
Architecture Engineering Planning Interiors
4280 Latham Street, Suite H 951.682.0470 t
Riverside, California 92501 951.682.1801 f

LICENSED ARCHITECT SCOTT BRAYTON BERMAN C-22700 EXP. 9-30-13 STATE OF CALIFORNIA

Public Agency Submittal:
Issued for Bidding:
Issued for Construction:

Revisions:

A 09.15.2011 PERMIT SET

PHASE II:
FOX
ENTERTAINMENT
PLAZA:
PARKING GARAGE

3601 Market Street
Riverside, CA 92501

CITY of RIVERSIDE

CITY OF RIVERSIDE

3900 Main Street, Riverside, CA 92522

Phase:
Revised 04.19.2011
PPD Project № 10-101

ENLARGED BUILDING ELEVATIONS (SOUTH)

Issued Date: 05.02.2011
Drawn By: RTR
Checked By: SBH

PA-4.5
Sheet №

File Path & Name: C:\Dimension Z\PPD Projects\2009 - Fox Plaza Parking Structure (Bayley)\Fox PPD Revit\PPD Fox Theater Parking Garage_Owner.rvt
© WWCOT 2009 -- Plotted: 9/13/2011 10:36:53 AM

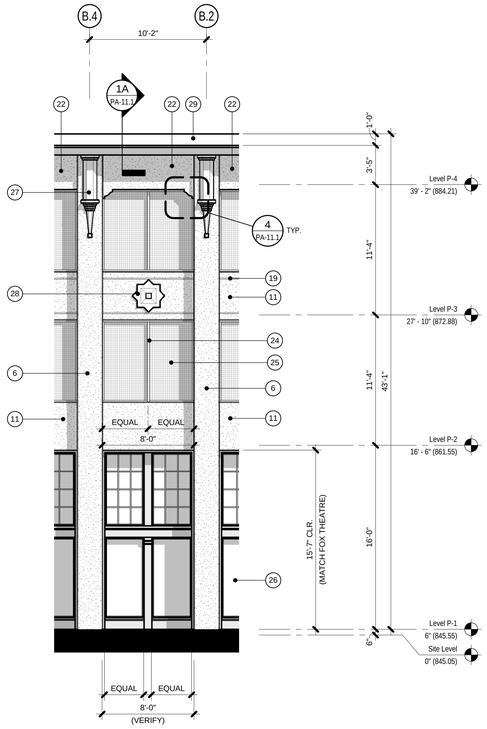

3 PA-4.6 PARTIAL EAST BUILDING ELEVATION (FINISH)
3/16" = 1'-0"

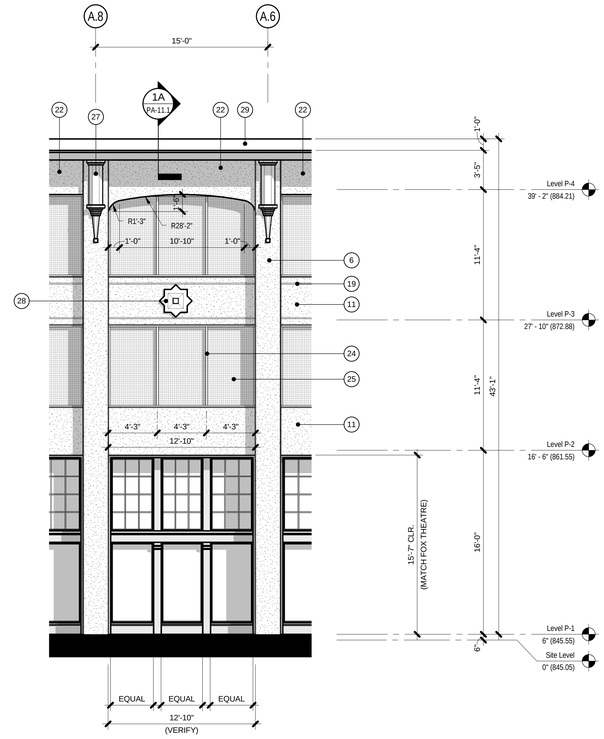

2 PA-4.6 PARTIAL EAST BUILDING ELEVATION (FINISH)
3/16" = 1'-0"

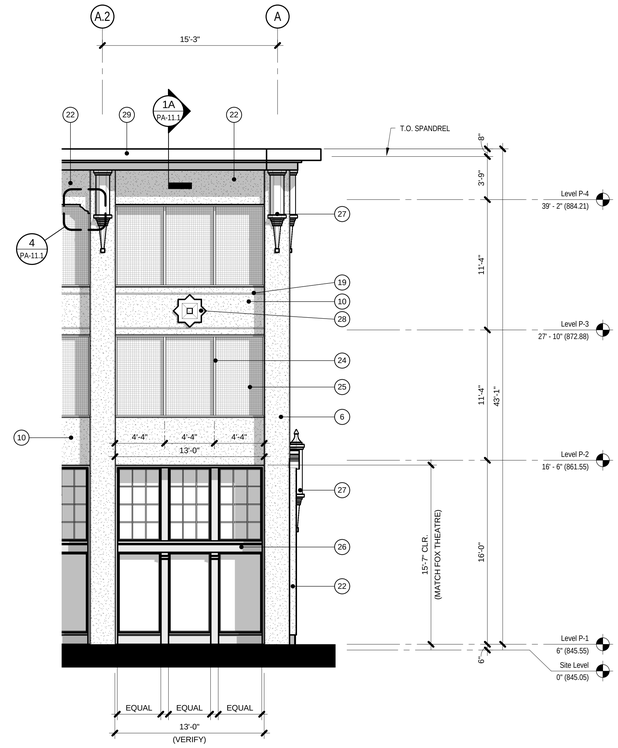

1 PA-4.6 PARTIAL EAST BUILDING ELEVATION (FINISH)
3/16" = 1'-0"

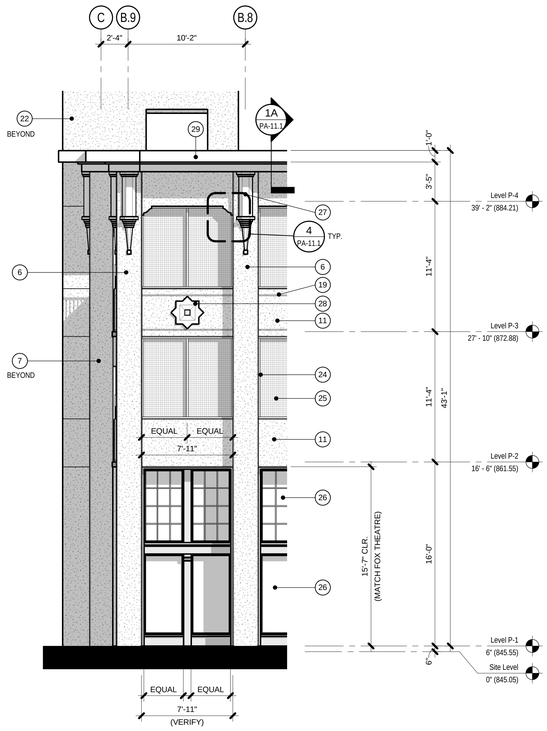

4 PA-4.6 PARTIAL EAST BUILDING ELEVATION (FINISH)
3/16" = 1'-0"

MARK	KEYNOTE DESCRIPTION
1	CONCRETE FOOTING (REF. STRUCT'L. DRAWINGS)
2	GRADE/FINISHED EXTERIOR SURFACE (REF. CIVIL DRAWINGS)
3	CMU RETAINING WALL (REF. STRUCT'L DRAWINGS)
4	CONCRETE FLOOR SLAB ON GRADE
5	CONCRETE RAMP SLAB ON GRADE
6	CAST-IN-PLACE CONCRETE MOMENT FRAME COLUMN
7	CAST-IN-PLACE CONCRETE GRAVITY COLUMN
8	CAST-IN-PLACE CONCRETE GIRDER
9	CAST-IN-PLACE CONCRETE BEAM
10	CAST-IN-PLACE CONCRETE SPANDREL
11	CAST-IN-PLACE CONCRETE MOMENT FRAME BEAM
12	ELEVATED CONCRETE FLOOR SLAB
13	ELEVATED CONCRETE RAMP SLAB
14	CMU HOISTWAY
15	GALVANIZED BARRIER CABLES
16	BARRIER BEAM ASSEMBLY (REF. A-10 SHEETS)
17	SIGNAGE (REF. A-10 SHEETS)
19	REVEAL
20	CONCRETE FILLED, METAL PAN STAIRS (PAINTED)
21	METAL GUARDRAIL (PAINTED)
22	METAL STUD & PLASTER WALL
24	METAL FRAMED FACADE
25	METAL SCREENED FACADE
26	STOREFRONT FRAMING with GLAZING (MATCH EXISTING THEATRE)
27	DECORATIVE LANTERN - FOAM (MATCH EXISTING THEATRE)
28	MEDALLION - FOAM (MATCH EXISTING THEATRE)
29	METAL STUD and EIFS CORNICE
30	METAL DOOR (PAINTED)
31	ADJACENT STRUCTURE
32	CMU WALL (REF. STRUCT'L DRAWINGS)
33	CONCRETE-FILLED STEEL PIPE BOLLARD
34	DECORATIVE METAL
35	UPTURNED CAST-IN-PLACE CONCRETE SPANDREL BEAM
36	STAIR COLUMN
37	PEDESTRIAN GATE WITH PANIC HARDWARE (PAINTED)
38	METAL SLIDING TRASH ENCLOSURE GATE (PAINTED)
39	CONCRETE-FILLED METAL DECK
40	METAL HANDRAIL (PAINTED)
41	CONCRETE STAIRS OVER FOAM (REF. STRUCT'L DRAWINGS)

Bayley Construction
3730 S. Susan St.
Suite 200
Santa Ana, CA. 92704
CA. License 734880
Tel 714-540-8863
Fax 714-556-8863

Bayley Construction
8005 S.E. 28th St.
P.O. Box 9004
Mercer Island, WA. 98040
WA. License BAYLECO343JC
Tel 206-621-8884
Fax 206-343-7728

BAYLEY CONSTRUCTION

Pacific Parking DESIGN
6 Venture, Suite 275 949.341.0066 t
Irvine, California 92618 949.341.0099 f

DLR Group WWCOT
Architecture Engineering Planning Interiors
4280 Latham Street, Suite H 951.682.0470 t
Riverside, California 92501 951.682.1801 f

LICENSED ARCHITECT
SCOTT BRAYTON BERMAN
C-22700
EXP. 9-30-13
STATE OF CALIFORNIA

Public Agency Submittal:
Issued for Bidding:
Issued for Construction:

Revisions:

A 09.15.2011 PERMIT SET

PHASE II: FOX ENTERTAINMENT PLAZA: PARKING GARAGE

3601 Market Street
Riverside, CA 92501

CITY of RIVERSIDE

CITY OF RIVERSIDE

3900 Main Street, Riverside, CA 92522

Phase:
Revised 04.19.2011
PPD Project № 10-101

ENLARGED BUILDING ELEVATIONS (EAST)

Issued Date: 05.02.2011
Drawn By: RTR
Checked By: SBH

PA-4.6
Sheet №

File Path & Name: C:\Dimension Z\PPD\Projects\2009 - Fox Plaza Parking Structure (Bayley)\Fox PPD Revit\PPD Fox Theater Parking Garage_Owner.rvt
© WWCOT 2009 - Plotted 9/13/2011 10:37:35 AM

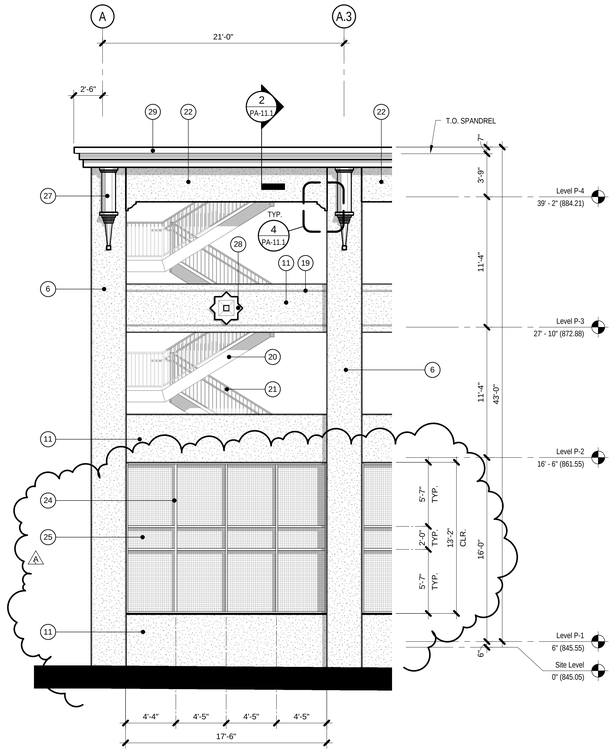

2 PA-4.7 PARTIAL WEST BUILDING ELEVATION (FINISH)
3/16" = 1'-0"

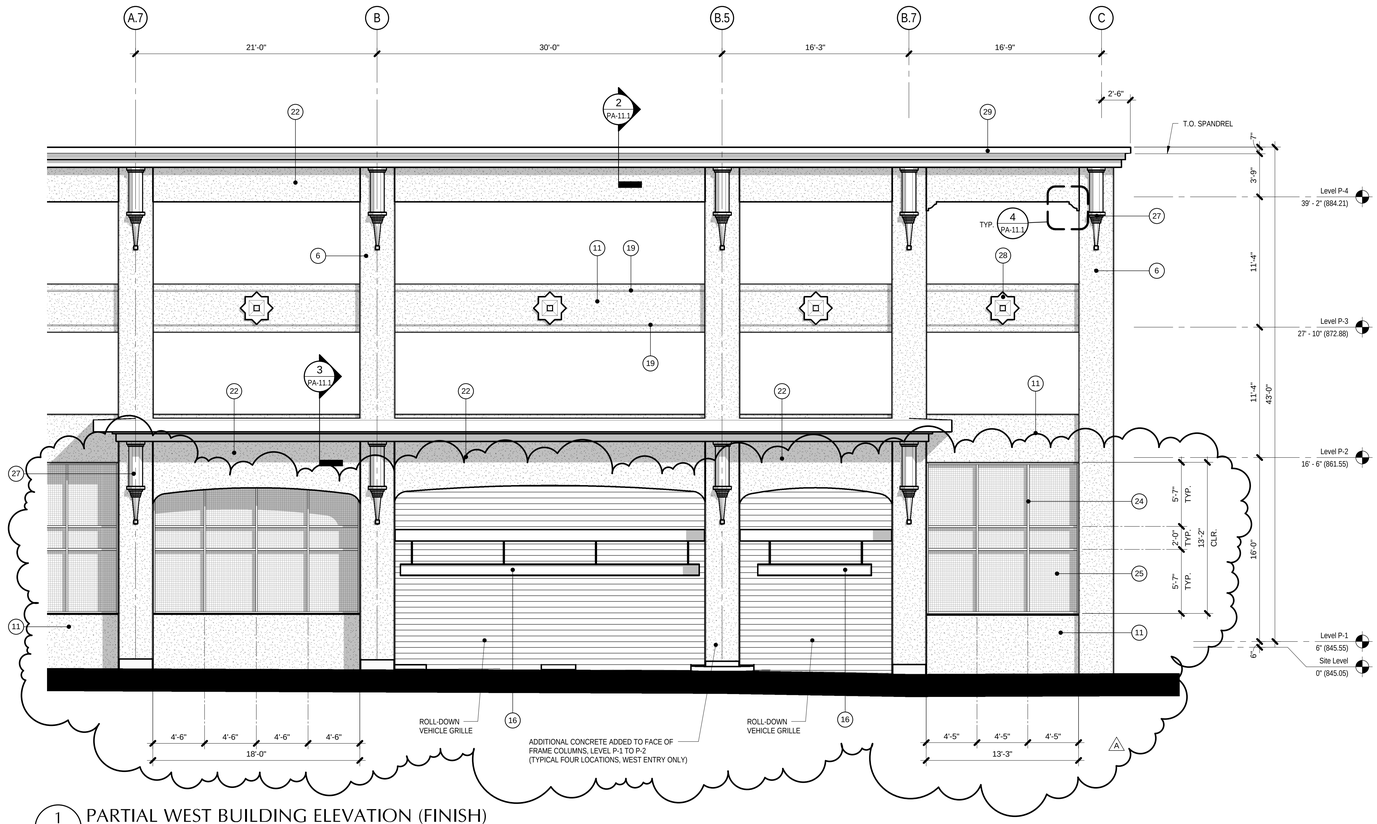

1 PA-4.7 PARTIAL WEST BUILDING ELEVATION (FINISH)
3/16" = 1'-0"

MARK	KEYNOTE DESCRIPTION
1	CONCRETE FOOTING (REF. STRUCT'L. DRAWINGS)
2	GRADE/FINISHED EXTERIOR SURFACE (REF. CIVIL DRAWINGS)
3	CMU RETAINING WALL (REF. STRUCT'L DRAWINGS)
4	CONCRETE FLOOR SLAB ON GRADE
5	CONCRETE RAMP SLAB ON GRADE
6	CAST-IN-PLACE CONCRETE MOMENT FRAME COLUMN
7	CAST-IN-PLACE CONCRETE GRAVITY COLUMN
8	CAST-IN-PLACE CONCRETE GIRDER
9	CAST-IN-PLACE CONCRETE BEAM
10	CAST-IN-PLACE CONCRETE SPANDREL
11	CAST-IN-PLACE CONCRETE MOMENT FRAME BEAM
12	ELEVATED CONCRETE FLOOR SLAB
13	ELEVATED CONCRETE RAMP SLAB
14	CMU HOISTWAY
15	GALVANIZED BARRIER CABLES
16	BARRIER BEAM ASSEMBLY (REF. A-10 SHEETS)
17	SIGNAGE (REF. A-10 SHEETS)
19	REVEAL
20	CONCRETE FILLED, METAL PAN STAIRS (PAINTED)
21	METAL GUARDRAIL (PAINTED)
22	METAL STUD & PLASTER WALL
24	METAL FRAMED FACADE
25	METAL SCREENED FACADE
26	STOREFRONT FRAMING with GLAZING (MATCH EXISTING THEATRE)
27	DECORATIVE LANTERN - FOAM (MATCH EXISTING THEATRE)
28	MEDALLION - FOAM (MATCH EXISTING THEATRE)
29	METAL STUD and EIFS CORNICE
30	METAL DOOR (PAINTED)
31	ADJACENT STRUCTURE
32	CMU WALL (REF. STRUCT'L DRAWINGS)
33	CONCRETE-FILLED STEEL PIPE BOLLARD
34	DECORATIVE METAL
35	UPTURNED CAST-IN-PLACE CONCRETE SPANDREL BEAM
36	STAIR COLUMN
37	PEDESTRIAN GATE WITH PANIC HARDWARE (PAINTED)
38	METAL SLIDING TRASH ENCLOSURE GATE (PAINTED)
39	CONCRETE-FILLED METAL DECK
40	METAL HANDRAIL (PAINTED)
41	CONCRETE STAIRS OVER FOAM (REF. STRUCT'L DRAWINGS)

Bayley Construction
3730 S. Susan St.
Suite 200
Santa Ana, CA. 92704
CA. License 734880
Tel 714-540-8863
Fax 714-556-8863

Bayley Construction
8005 S.E. 28th St.
P.O. Box 9004
Mercer Island, WA. 98040
WA. License BAYLECO343JC
Tel 206-621-8884
Fax 206-343-7728

BAYLEY CONSTRUCTION

Pacific Parking DESIGN
6 Venture, Suite 275 949.341.0066 t
Irvine, California 92618 949.341.0099 f

DLR Group WWCOT
Architecture Engineering Planning Interiors
4280 Latham Street, Suite H 951.682.0470 t
Riverside, California 92501 951.682.1801 f

LICENSED ARCHITECT
SCOTT BRAYTON BERMAN
C-22700
EXP. 9-30-13
STATE OF CALIFORNIA

Public Agency Submittal:
Issued for Bidding:
Issued for Construction:

Revisions:

A 09.15.2011 PERMIT SET

PHASE II: FOX ENTERTAINMENT PLAZA: PARKING GARAGE

3601 Market Street
Riverside, CA 92501

CITY of RIVERSIDE

CITY OF RIVERSIDE

3900 Main Street, Riverside, CA 92522

Phase:
Revised 04.19.2011
PPD Project № 10-101

ENLARGED BUILDING ELEVATIONS (WEST)

Issued Date: 05.02.2011
Drawn By: RTR
Checked By: SBH

PA-4.7
Sheet №

File Path & Name: C:\Dimension Z\PPD Projects\2009 - Fox Plaza Parking Structure (Bayley)\Fox PPD Revit\PPD Fox Theater Parking Garage_Owner.rvt
© WWCOT 2009 – Plotted 9/13/2011 10:38:12 AM

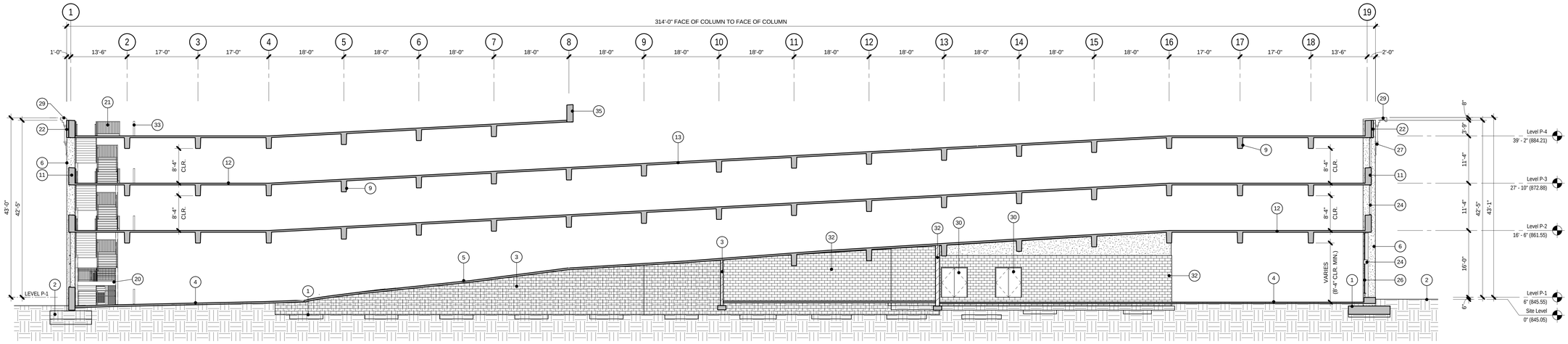

A PA-5.1 LONGITUDINAL BUILDING SECTION at LINE A.3

3/32" = 1'-0"

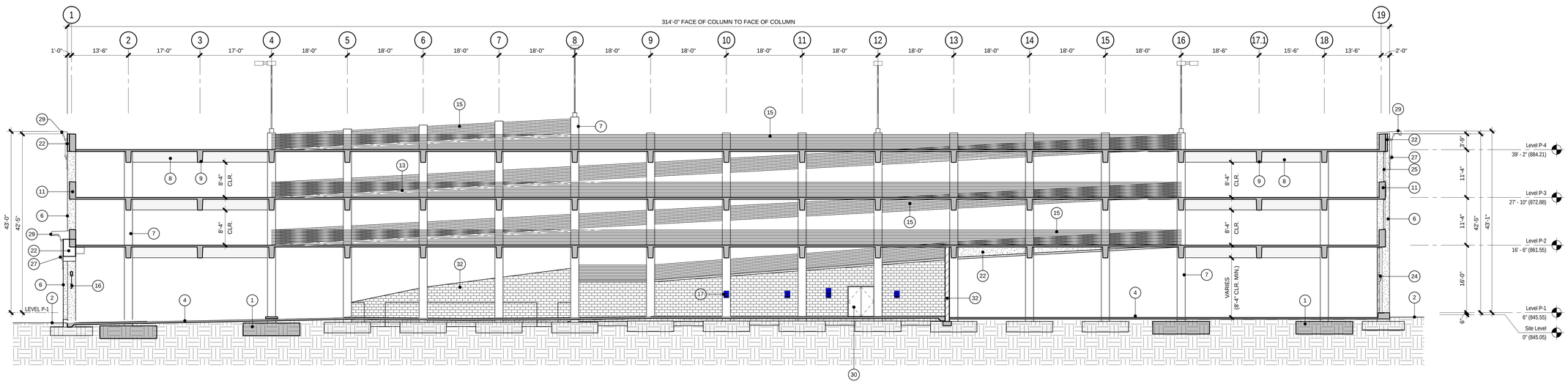

B PA-5.1 LONGITUDINAL BUILDING SECTION at LINE B

3/32" = 1'-0"

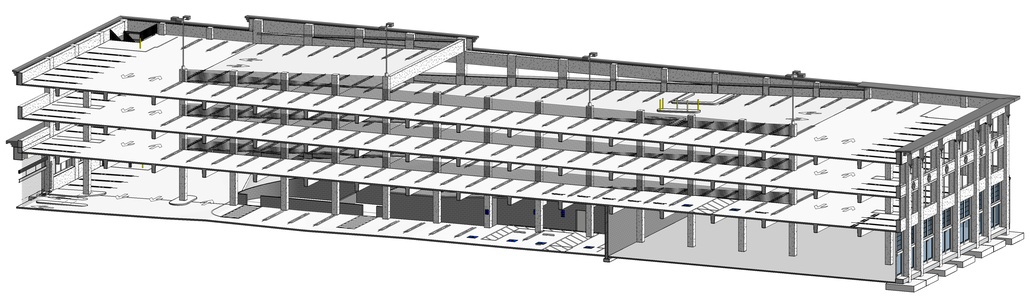

1 PA-5.1 LONGITUDINAL PERSPECTIVE SECTION at LINE B.2

MARK	KEYNOTE DESCRIPTION
1	CONCRETE FOOTING (REF. STRUCT'L. DRAWINGS)
2	GRADE/FINISHED EXTERIOR SURFACE (REF. CIVIL DRAWINGS)
3	CMU RETAINING WALL (REF. STRUCT'L DRAWINGS)
4	CONCRETE FLOOR SLAB ON GRADE
5	CONCRETE RAMP SLAB ON GRADE
6	CAST-IN-PLACE CONCRETE MOMENT FRAME COLUMN
7	CAST-IN-PLACE CONCRETE GRAVITY COLUMN
8	CAST-IN-PLACE CONCRETE GIRDER
9	CAST-IN-PLACE CONCRETE BEAM
10	CAST-IN-PLACE CONCRETE SPANDREL
11	CAST-IN-PLACE CONCRETE MOMENT FRAME BEAM
12	ELEVATED CONCRETE FLOOR SLAB
13	ELEVATED CONCRETE RAMP SLAB
14	CMU HOISTWAY
15	GALVANIZED BARRIER CABLES
16	BARRIER BEAM ASSEMBLY (REF. A-10 SHEETS)
17	SIGNAGE (REF. A-10 SHEETS)
19	REVEAL
20	CONCRETE FILLED, METAL PAN STAIRS (PAINTED)
21	METAL GUARDRAIL (PAINTED)
22	METAL STUD & PLASTER WALL
24	METAL FRAMED FACADE
25	METAL SCREENED FACADE
26	STOREFRONT FRAMING with GLAZING (MATCH EXISTING THEATRE)
27	DECORATIVE LANTERN - FOAM (MATCH EXISTING THEATRE)
28	MEDALLION - FOAM (MATCH EXISTING THEATRE)
29	METAL STUD and EIFS CORNICE
30	METAL DOOR (PAINTED)
31	ADJACENT STRUCTURE
32	CMU WALL (REF. STRUCT'L DRAWINGS)
33	CONCRETE-FILLED STEEL PIPE BOLLARD
34	DECORATIVE METAL
35	UPTURNED CAST-IN-PLACE CONCRETE SPANDREL BEAM
36	STAIR COLUMN
37	PEDESTRIAN GATE WITH PANIC HARDWARE (PAINTED)
38	METAL SLIDING TRASH ENCLOSURE GATE (PAINTED)
39	CONCRETE-FILLED METAL DECK
40	METAL HANDRAIL (PAINTED)
41	CONCRETE STAIRS OVER FOAM (REF. STRUCT'L DRAWINGS)

VERTICAL CLEARANCE

THE VERTICAL DIMENSION FROM THE FINISH FLOOR TO THE UNDERSIDE OF ANY STRUCTURAL ELEMENT, PIPING, ELECTRICAL FIXTURE ETC. SHALL BE:

8'-2" MINIMUM IN PARKING STALL AREAS AND 8'-2" MINIMUM AT DRIVE AISLES - ALL LEVELS

AT EACH VEHICULAR ENTRANCE: PROVIDE DISABLED ACCESS AUTHORIZATION SIGNS.

Bayley Construction
3730 S. Susan St.
Suite 200
Santa Ana, CA. 92704
CA. License 734880
Tel 714-540-8863
Fax 714-556-8863

Bayley Construction
8005 S.E. 28th St.
P.O. Box 9004
Mercer Island, WA. 98040
WA. License BAYLECO343JC
Tel 206-621-8884
Fax 206-343-7728

BAYLEY CONSTRUCTION

Pacific Parking DESIGN
6 Venture, Suite 275 949.341.0066 t
Irvine, California 92618 949.341.0099 f

DLR Group WWCOT
Architecture Engineering Planning Interiors
4280 Latham Street, Suite H 951.682.0470 t
Riverside, California 92501 951.682.1801 f

LICENSED ARCHITECT SCOTT BRAYTON BERMAN C-22700 EXP. 9-30-13 STATE OF CALIFORNIA

Public Agency Submittal:
Issued for Bidding:
Issued for Construction:

Revisions:

A 09.15.2011 PERMIT SET

PHASE II: FOX ENTERTAINMENT PLAZA: PARKING GARAGE

3601 Market Street
Riverside, CA 92501

CITY of RIVERSIDE

CITY OF RIVERSIDE

3900 Main Street, Riverside, CA 92522

Phase:
Revised 04.19.2011
PPD Project № 10-101

LONGITUDINAL BUILDING SECTIONS

Issued Date: 05.02.2011
Drawn By: RTR
Checked By: SBH

PA-5.1
Sheet №

File Path & Name: C:\Dimension Z\PPD Projects\2009 - Fox Plaza Parking Structure (Bayley)\Fox PPD Revit\PPD Fox Theater Parking Garage_Owner.rvt
© WWCOT 2009 -- Plotted: 9/13/2011 10:38:57 AM

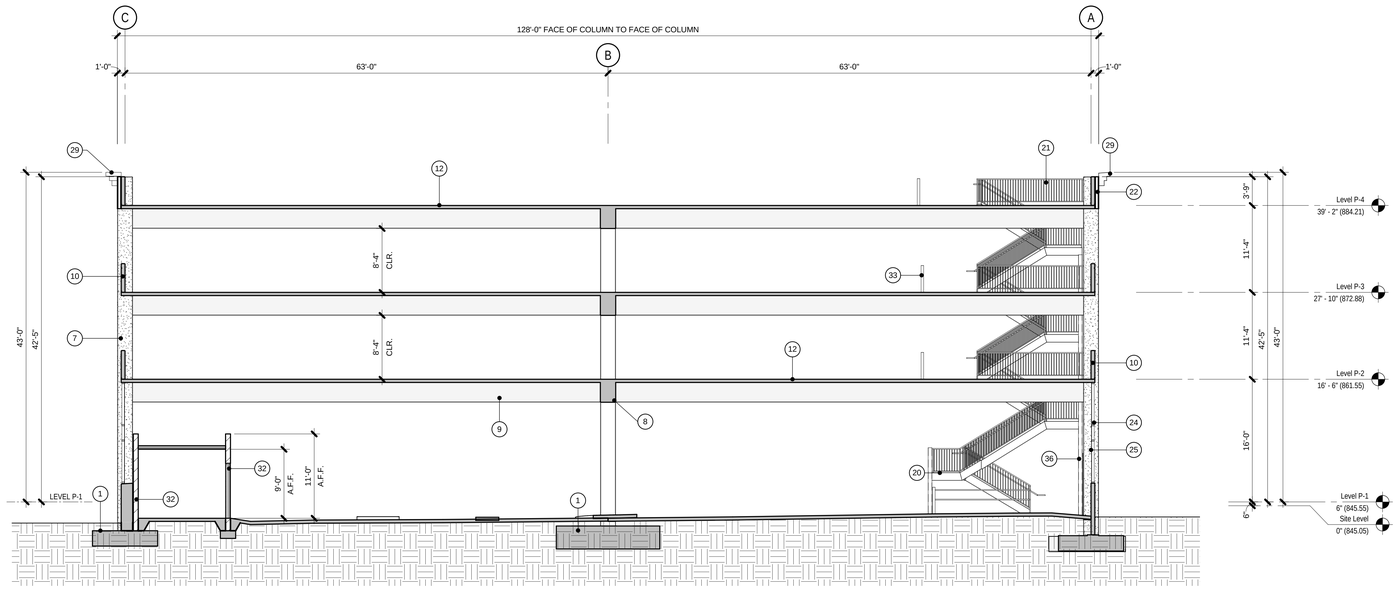

C
PA-5.2
TRANSVERSE BUILDING SECTION at LINE 2
1/8" = 1'-0"

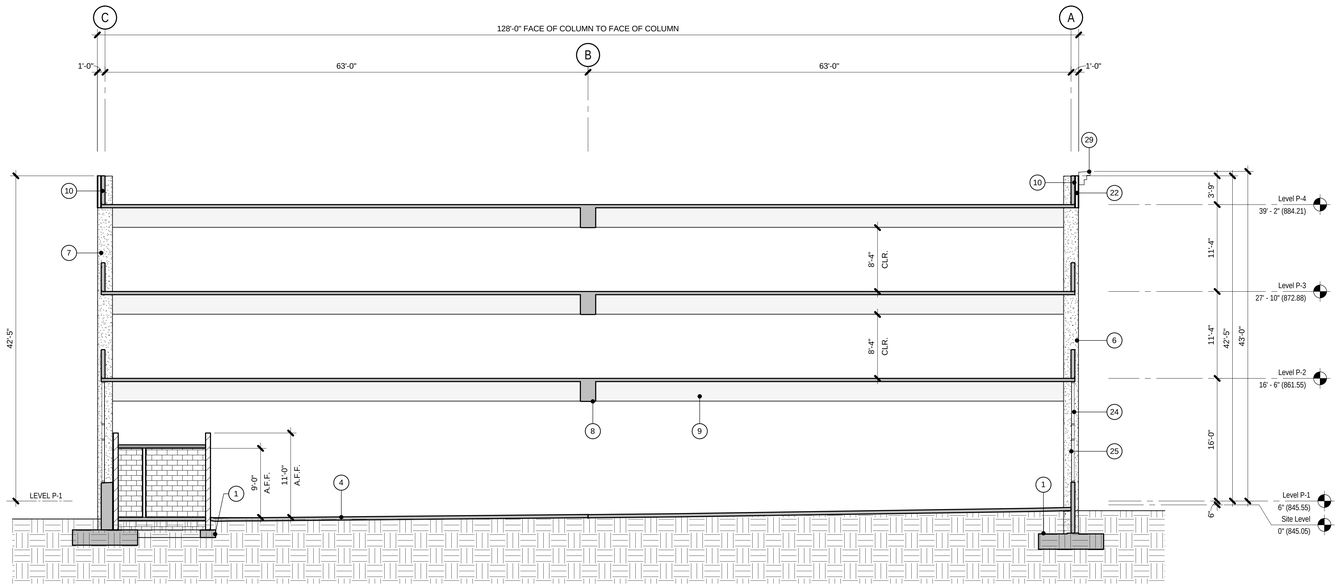

D
PA-5.2
TRANSVERSE BUILDING SECTION at LINE 3
1/8" = 1'-0"

MARK	KEYNOTE DESCRIPTION
1	CONCRETE FOOTING (REF. STRUCT'L. DRAWINGS)
2	GRADE/FINISHED EXTERIOR SURFACE (REF. CIVIL DRAWINGS)
3	CMU RETAINING WALL (REF. STRUCT'L DRAWINGS)
4	CONCRETE FLOOR SLAB ON GRADE
5	CONCRETE RAMP SLAB ON GRADE
6	CAST-IN-PLACE CONCRETE MOMENT FRAME COLUMN
7	CAST-IN-PLACE CONCRETE GRAVITY COLUMN
8	CAST-IN-PLACE CONCRETE GIRDER
9	CAST-IN-PLACE CONCRETE BEAM
10	CAST-IN-PLACE CONCRETE SPANDREL
11	CAST-IN-PLACE CONCRETE MOMENT FRAME BEAM
12	ELEVATED CONCRETE FLOOR SLAB
13	ELEVATED CONCRETE RAMP SLAB
14	CMU HOISTWAY
15	GALVANIZED BARRIER CABLES
16	BARRIER BEAM ASSEMBLY (REF. A-10 SHEETS)
17	SIGNAGE (REF. A-10 SHEETS)
19	REVEAL
20	CONCRETE FILLED, METAL PAN STAIRS (PAINTED)
21	METAL GUARDRAIL (PAINTED)
22	METAL STUD & PLASTER WALL
24	METAL FRAMED FACADE
25	METAL SCREENED FACADE
26	STOREFRONT FRAMING with GLAZING (MATCH EXISTING THEATRE)
27	DECORATIVE LANTERN - FOAM (MATCH EXISTING THEATRE)
28	MEDALLION - FOAM (MATCH EXISTING THEATRE)
29	METAL STUD and EIFS CORNICE
30	METAL DOOR (PAINTED)
31	ADJACENT STRUCTURE
32	CMU WALL (REF. STRUCT'L DRAWINGS)
33	CONCRETE-FILLED STEEL PIPE BOLLARD
34	DECORATIVE METAL
35	UPTURNED CAST-IN-PLACE CONCRETE SPANDREL BEAM
36	STAIR COLUMN
37	PEDESTRIAN GATE WITH PANIC HARDWARE (PAINTED)
38	METAL SLIDING TRASH ENCLOSURE GATE (PAINTED)
39	CONCRETE-FILLED METAL DECK
40	METAL HANDRAIL (PAINTED)
41	CONCRETE STAIRS OVER FOAM (REF. STRUCT'L DRAWINGS)

VERTICAL CLEARANCE

THE VERTICAL DIMENSION FROM THE FINISH FLOOR TO THE UNDERSIDE OF ANY STRUCTURAL ELEMENT, PIPING, ELECTRICAL FIXTURE ETC. SHALL BE:

8'-2" MINIMUM IN PARKING STALL AREAS AND 8'-2" MINIMUM AT DRIVE AISLES - ALL LEVELS

AT EACH VEHICULAR ENTRANCE: PROVIDE DISABLED ACCESS AUTHORIZATION SIGNS.

Bayley Construction
3730 S. Susan St.
Suite 200
Santa Ana, CA. 92704
CA. License 734880
Tel 714-540-8863
Fax 714-556-8863

Bayley Construction
8005 S.E. 28th St.
P.O. Box 9004
Mercer Island, WA. 98040
WA. License BAYLEC0343JC
Tel 206-621-8884
Fax 206-343-7728

Pacific Parking DESIGN
6 Venture, Suite 275 949.341.0066 t
Irvine, California 92618 949.341.0099 f

DLR Group WWCOT
Architecture Engineering Planning Interiors
4280 Latham Street, Suite H 951.682.0470 t
Riverside, California 92501 951.682.1801 f

LICENSED ARCHITECT
SCOTT BRAYTON BERMAN
C-22700
EXP. 9-30-13
STATE OF CALIFORNIA

Public Agency Submittal:
Issued for Bidding:
Issued for Construction:

Revisions:

A 09.15.2011 PERMIT SET

PHASE II: FOX ENTERTAINMENT PLAZA: PARKING GARAGE

3601 Market Street
Riverside, CA 92501

CITY of RIVERSIDE

CITY OF RIVERSIDE
3900 Main Street, Riverside, CA 92522

Phase:
Revised 04.19.2011
PPD Project № 10-101

TRANSVERSE BUILDING SECTIONS

Issued Date: 05.02.2011
Drawn By: RTR
Checked By: SBH

PA-5.2

Sheet №

File Path & Name: C:\Dimension Z\PPD Projects\2009 - Fox Plaza Parking Structure (Bayley)\Fox PPD Revit\PPD Fox Theater Parking Garage_Owner.rvt
© WWCOT 2009 – Plotted 9/13/2011 10:42:38 AM

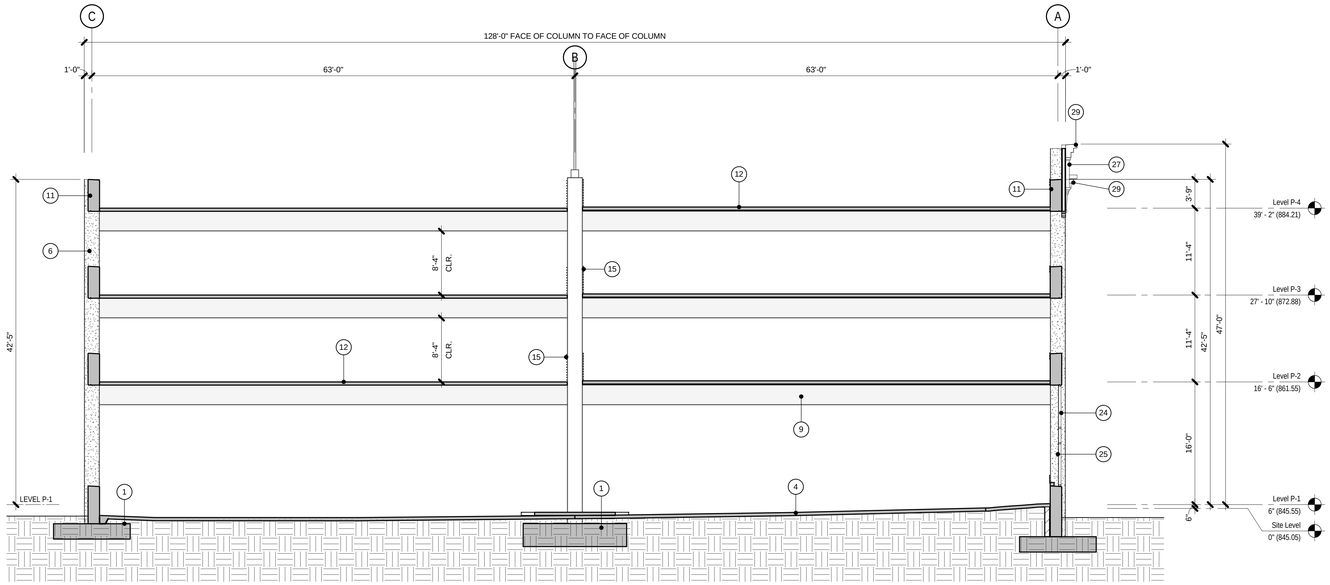

E
PA-5.3

TRANSVERSE BUILDING SECTION at LINE 4

1/8" = 1'-0"

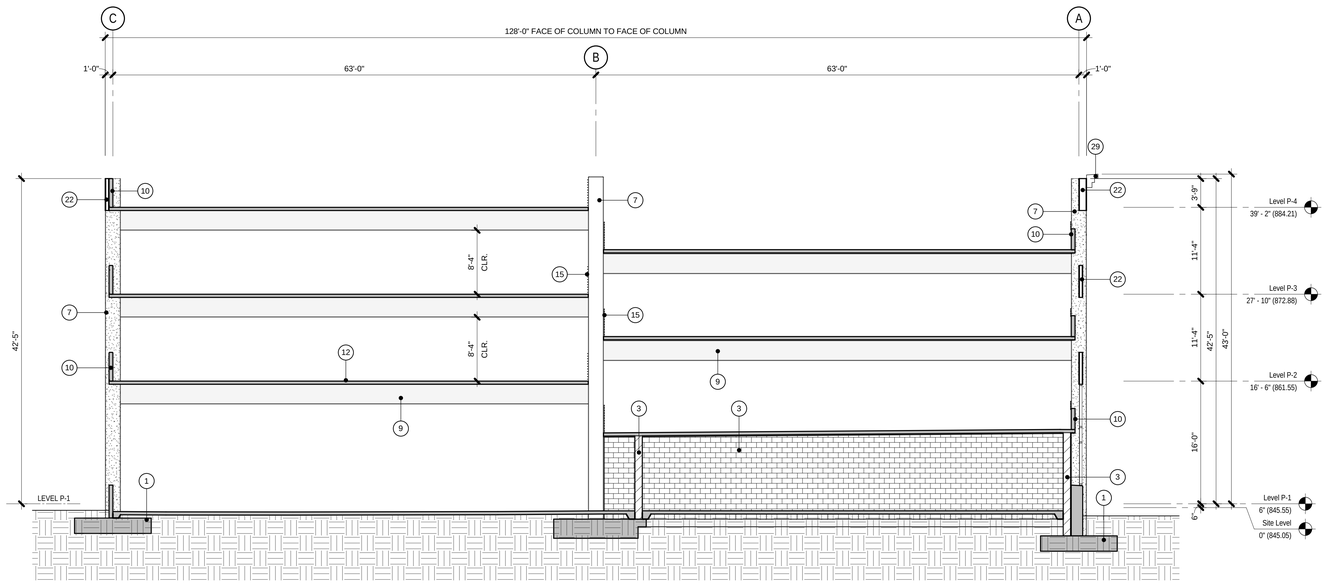

F
PA-5.3

TRANSVERSE BUILDING SECTION at LINE 10

1/8" = 1'-0"

MARK	KEYNOTE DESCRIPTION
1	CONCRETE FOOTING (REF. STRUCT'L. DRAWINGS)
2	GRADE/FINISHED EXTERIOR SURFACE (REF. CIVIL DRAWINGS)
3	CMU RETAINING WALL (REF. STRUCT'L DRAWINGS)
4	CONCRETE FLOOR SLAB ON GRADE
5	CONCRETE RAMP SLAB ON GRADE
6	CAST-IN-PLACE CONCRETE MOMENT FRAME COLUMN
7	CAST-IN-PLACE CONCRETE GRAVITY COLUMN
8	CAST-IN-PLACE CONCRETE GIRDER
9	CAST-IN-PLACE CONCRETE BEAM
10	CAST-IN-PLACE CONCRETE SPANDREL
11	CAST-IN-PLACE CONCRETE MOMENT FRAME BEAM
12	ELEVATED CONCRETE FLOOR SLAB
13	ELEVATED CONCRETE RAMP SLAB
14	CMU HOISTWAY
15	GALVANIZED BARRIER CABLES
16	BARRIER BEAM ASSEMBLY (REF. A-10 SHEETS)
17	SIGNAGE (REF. A-10 SHEETS)
19	REVEAL
20	CONCRETE FILLED, METAL PAN STAIRS (PAINTED)
21	METAL GUARDRAIL (PAINTED)
22	METAL STUD & PLASTER WALL
24	METAL FRAMED FACADE
25	METAL SCREENED FACADE
26	STOREFRONT FRAMING with GLAZING (MATCH EXISTING THEATRE)
27	DECORATIVE LANTERN - FOAM (MATCH EXISTING THEATRE)
28	MEDALLION - FOAM (MATCH EXISTING THEATRE)
29	METAL STUD and EIFS CORNICE
30	METAL DOOR (PAINTED)
31	ADJACENT STRUCTURE
32	CMU WALL (REF. STRUCT'L DRAWINGS)
33	CONCRETE-FILLED STEEL PIPE BOLLARD
34	DECORATIVE METAL
35	UPTURNED CAST-IN-PLACE CONCRETE SPANDREL BEAM
36	STAIR COLUMN
37	PEDESTRIAN GATE WITH PANIC HARDWARE (PAINTED)
38	METAL SLIDING TRASH ENCLOSURE GATE (PAINTED)
39	CONCRETE-FILLED METAL DECK
40	METAL HANDRAIL (PAINTED)
41	CONCRETE STAIRS OVER FOAM (REF. STRUCT'L DRAWINGS)

VERTICAL CLEARANCE

THE VERTICAL DIMENSION FROM THE FINISH FLOOR TO THE UNDERSIDE OF ANY STRUCTURAL ELEMENT, PIPING, ELECTRICAL FIXTURE ETC. SHALL BE:

8'-2" MINIMUM IN PARKING STALL AREAS AND 8'-2" MINIMUM AT DRIVE AISLES - ALL LEVELS

AT EACH VEHICULAR ENTRANCE: PROVIDE DISABLED ACCESS AUTHORIZATION SIGNS.

Bayley Construction
3730 S. Susan St.
Suite 200
Santa Ana, CA. 92704
CA. License 734880
Tel 714-540-8863
Fax 714-556-8863

Bayley Construction
8005 S.E. 28th St.
P.O. Box 9004
Mercer Island, WA. 98040
WA. License BAYLEC0343C
Tel 206-621-8884
Fax 206-343-7728

Pacific Parking DESIGN
6 Venture, Suite 275 949.341.0066 t
Irvine, California 92618 949.341.0099 f

DLR Group WWCOT
Architecture Engineering Planning Interiors
4280 Latham Street, Suite H 951.682.0470 t
Riverside, California 92501 951.682.1801 f

LICENSED ARCHITECT
SCOTT BRAYTON BERMAN
C-22700
EXP. 9-30-13
STATE OF CALIFORNIA

Public Agency Submittal:
Issued for Bidding:
Issued for Construction:

Revisions:

A 09.15.2011 PERMIT SET

PHASE II: FOX ENTERTAINMENT PLAZA: PARKING GARAGE

3601 Market Street
Riverside, CA 92501

CITY of RIVERSIDE

CITY OF RIVERSIDE

3900 Main Street, Riverside, CA 92522

Phase:
Revised 04.19.2011
PPD Project № 10-101

TRANSVERSE BUILDING SECTIONS

Issued Date: 05.02.2011
Drawn By: RTR
Checked By: SBH

PA-5.3

Sheet №

File Path & Name: C:\Dimension Z\PPD Projects\2009 - Fox Plaza Parking Structure (Bayley)\Fox PPD Revit\PPD Fox Theater Parking Garage_Owner.rvt
© WWCOT 2009 – Plotted 9/13/2011 10:43:00 AM

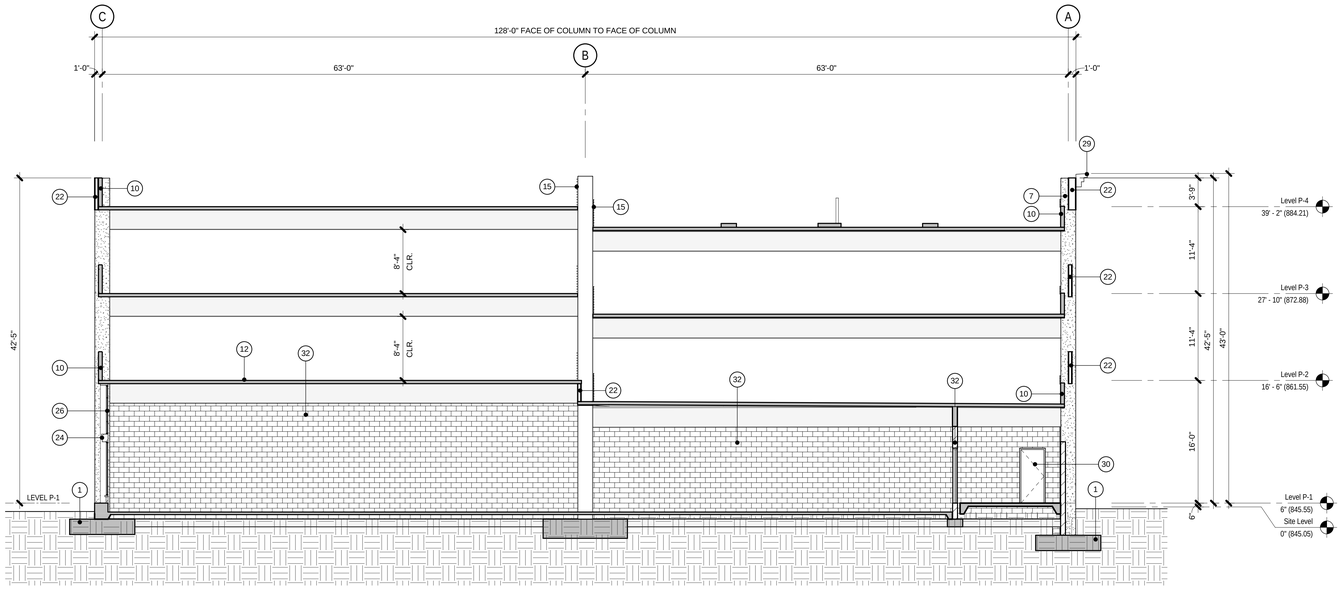

G
PA-5.4

TRANSVERSE BUILDING SECTION at LINE 13

1/8" = 1'-0"

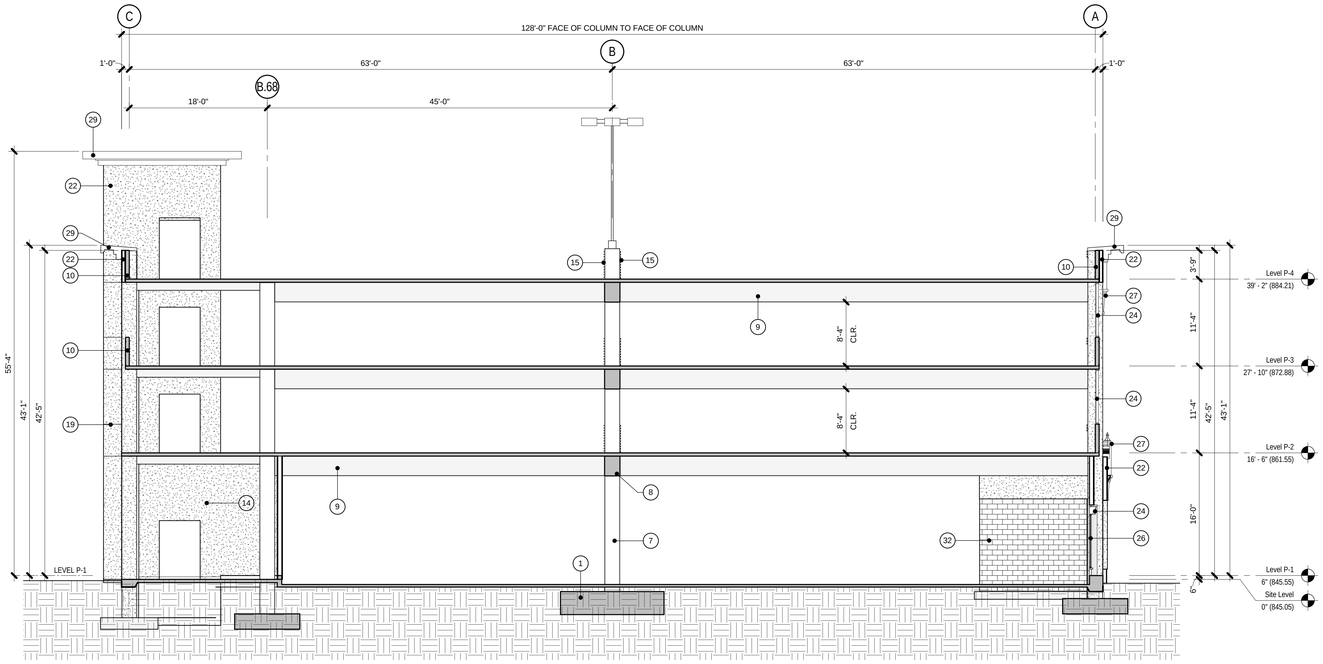

H
PA-5.4

TRANSVERSE BUILDING SECTION at LINE 16

1/8" = 1'-0"

MARK	KEYNOTE DESCRIPTION
1	CONCRETE FOOTING (REF. STRUCT'L. DRAWINGS)
2	GRADE/FINISHED EXTERIOR SURFACE (REF. CIVIL DRAWINGS)
3	CMU RETAINING WALL (REF. STRUCT'L DRAWINGS)
4	CONCRETE FLOOR SLAB ON GRADE
5	CONCRETE RAMP SLAB ON GRADE
6	CAST-IN-PLACE CONCRETE MOMENT FRAME COLUMN
7	CAST-IN-PLACE CONCRETE GRAVITY COLUMN
8	CAST-IN-PLACE CONCRETE GIRDER
9	CAST-IN-PLACE CONCRETE BEAM
10	CAST-IN-PLACE CONCRETE SPANDREL
11	CAST-IN-PLACE CONCRETE MOMENT FRAME BEAM
12	ELEVATED CONCRETE FLOOR SLAB
13	ELEVATED CONCRETE RAMP SLAB
14	CMU HOISTWAY
15	GALVANIZED BARRIER CABLES
16	BARRIER BEAM ASSEMBLY (REF. A-10 SHEETS)
17	SIGNAGE (REF. A-10 SHEETS)
19	REVEAL
20	CONCRETE FILLED, METAL PAN STAIRS (PAINTED)
21	METAL GUARDRAIL (PAINTED)
22	METAL STUD & PLASTER WALL
24	METAL FRAMED FACADE
25	METAL SCREENED FACADE
26	STOREFRONT FRAMING with GLAZING (MATCH EXISTING THEATRE)
27	DECORATIVE LANTERN - FOAM (MATCH EXISTING THEATRE)
28	MEDALLION - FOAM (MATCH EXISTING THEATRE)
29	METAL STUD and EIFS CORNICE
30	METAL DOOR (PAINTED)
31	ADJACENT STRUCTURE
32	CMU WALL (REF. STRUCT'L DRAWINGS)
33	CONCRETE-FILLED STEEL PIPE BOLLARD
34	DECORATIVE METAL
35	UPTURNED CAST-IN-PLACE CONCRETE SPANDREL BEAM
36	STAIR COLUMN
37	PEDESTRIAN GATE WITH PANIC HARDWARE (PAINTED)
38	METAL SLIDING TRASH ENCLOSURE GATE (PAINTED)
39	CONCRETE-FILLED METAL DECK
40	METAL HANDRAIL (PAINTED)
41	CONCRETE STAIRS OVER FOAM (REF. STRUCT'L DRAWINGS)

VERTICAL CLEARANCE

THE VERTICAL DIMENSION FROM THE FINISH FLOOR TO THE UNDERSIDE OF ANY STRUCTURAL ELEMENT, PIPING, ELECTRICAL FIXTURE ETC. SHALL BE:

8'-2" MINIMUM IN PARKING STALL AREAS AND 8'-2" MINIMUM AT DRIVE AISLES - ALL LEVELS

AT EACH VEHICULAR ENTRANCE: PROVIDE DISABLED ACCESS AUTHORIZATION SIGNS.

Bayley Construction
3730 S. Susan St.
Suite 200
Santa Ana, CA. 92704
CA. License 734880
Tel 714-540-8863
Fax 714-556-8863

Bayley Construction
8005 S.E. 28th St.
P.O. Box 9004
Mercer Island, WA. 98040
WA. License BAYLEC0343JC
Tel 206-621-8884
Fax 206-343-7728

Pacific Parking DESIGN
6 Venture, Suite 275 949.341.0066 t
Irvine, California 92618 949.341.0099 f

DLR Group WWCOT
Architecture Engineering Planning Interiors
4280 Latham Street, Suite H 951.682.0470 t
Riverside, California 92501 951.682.1801 f

LICENSED ARCHITECT
SCOTT BRAYTON BERMAN
C-22700
EXP. 9-30-13
STATE OF CALIFORNIA

Public Agency Submittal:
Issued for Bidding:
Issued for Construction:

Revisions:

A 09.15.2011 PERMIT SET

PHASE II: FOX ENTERTAINMENT PLAZA: PARKING GARAGE

3601 Market Street
Riverside, CA 92501

CITY of RIVERSIDE

CITY OF RIVERSIDE

3900 Main Street, Riverside, CA 92522

Phase:
Revised 04.19.2011
PPD Project № 10-101

TRANSVERSE BUILDING SECTIONS

Issued Date: 05.02.2011
Drawn By: RTR
Checked By: SBH

PA-5.4

Sheet №

File Path & Name: C:\Dimension Z\PPD Projects\2009 - Fox Plaza Parking Structure (Bayley)\Fox PPD Revit\PPD Fox Theater Parking Garage_Owner.rvt
© WWCOT 2009 – Plotted 9/13/2011 10:44:49 AM

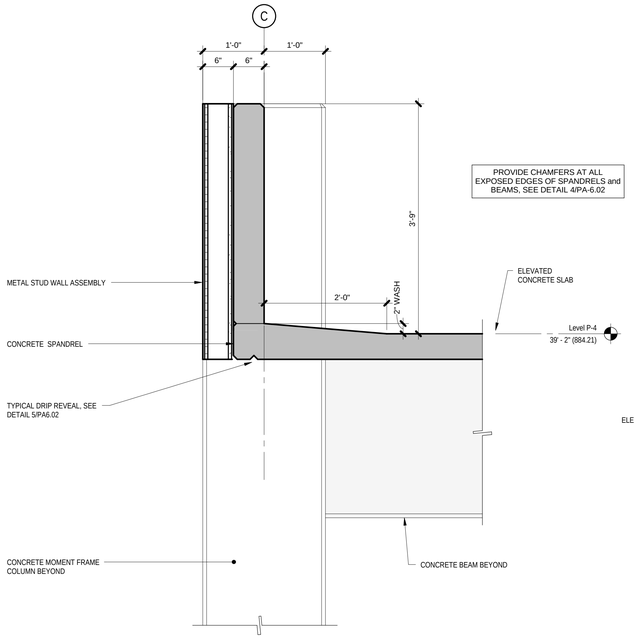

8 PA-6.01 TYPICAL SPANDREL DETAIL - TOP LEVEL

1" = 1'-0"

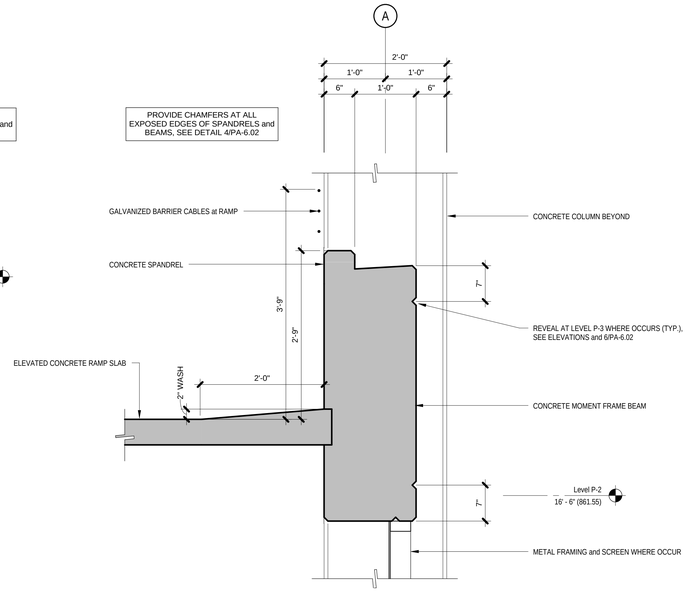

5 PA-6.01 TYPICAL MOMENT FRAME DETAIL - INTERMEDIATE LEVEL RAMP

1" = 1'-0"

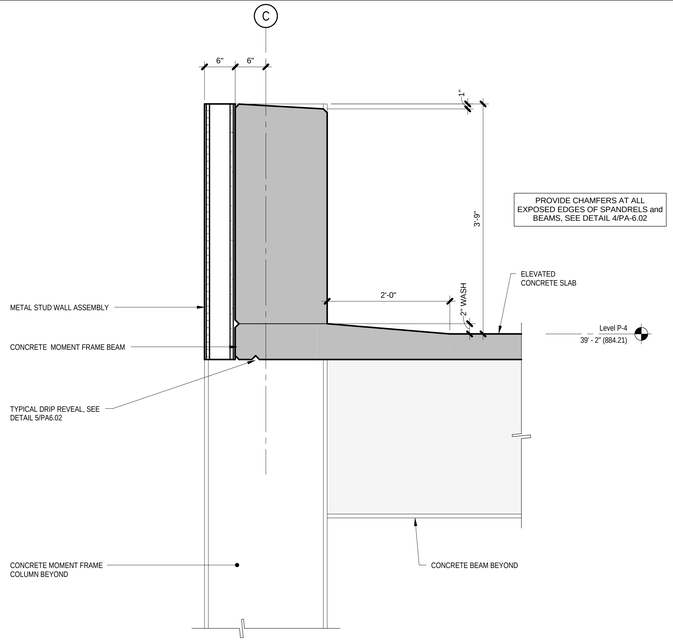

3 PA-6.01 TYPICAL MOMENT FRAME DETAIL - TOP LEVEL

1" = 1'-0"

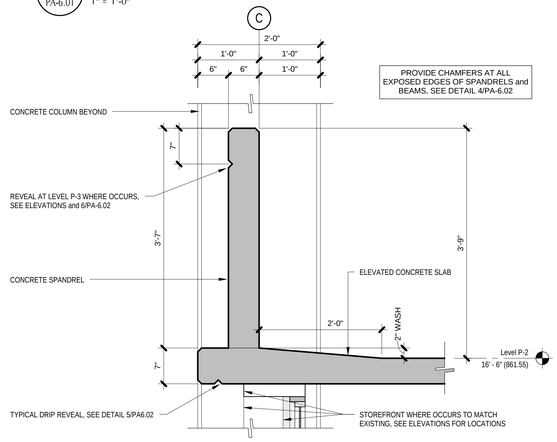

7 PA-6.01 TYPICAL SPANDREL DETAIL - INTERMEDIATE LEVEL

1" = 1'-0"

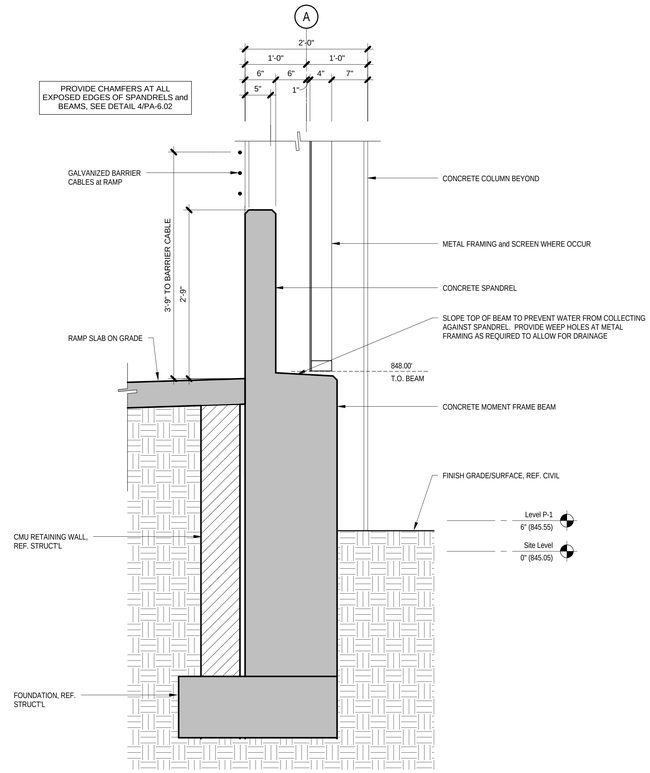

4 PA-6.01 TYPICAL MOMENT FRAME DETAIL - LEVEL P-1 RAMP

1" = 1'-0"

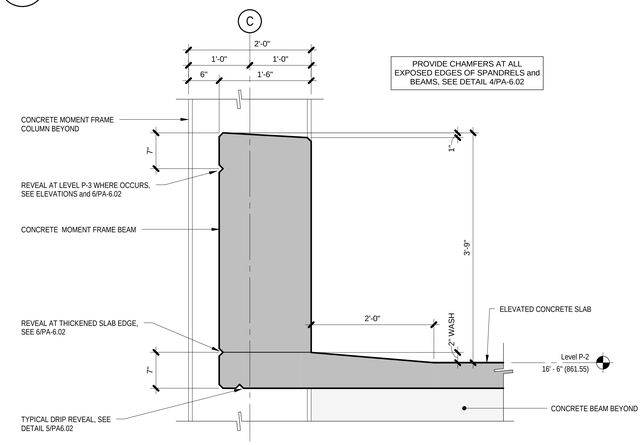

2 PA-6.01 TYPICAL MOMENT FRAME DETAIL - INTERMEDIATE LEVEL

1" = 1'-0"

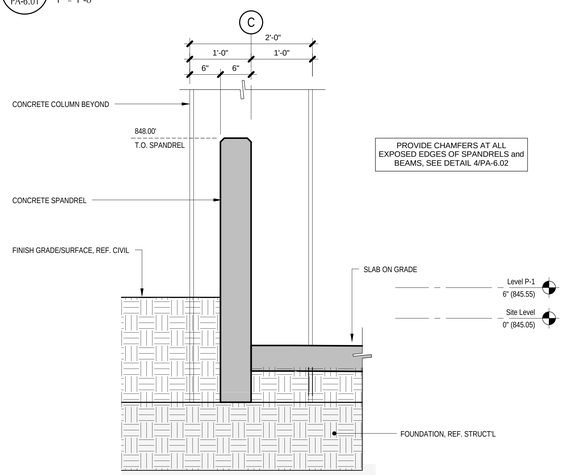

6 PA-6.01 TYPICAL SPANDREL DETAIL - LEVEL P-1

1" = 1'-0"

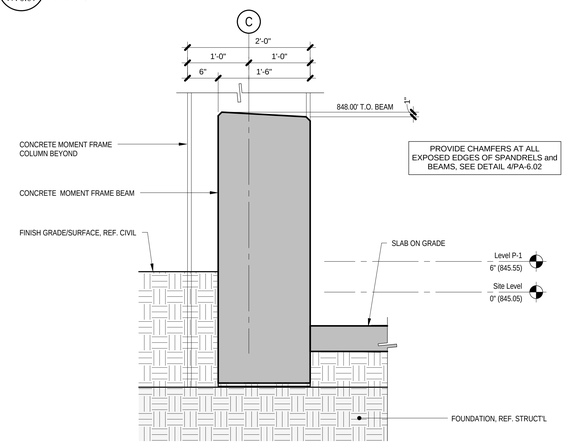

1 PA-6.01 TYPICAL MOMENT FRAME DETAIL - LEVEL P-1

1" = 1'-0"

Bayley Construction
3730 S. Susan St.
Suite 200
Santa Ana, CA. 92704
CA. License 734880
Tel 714-540-8863
Fax 714-556-8863

Bayley Construction
8005 S.E. 28th St.
P.O. Box 9004
Mercer Island, WA. 98040
WA. License BAYLECO343JC
Tel 206-621-8884
Fax 206-343-7728

BAYLEY CONSTRUCTION

Pacific Parking DESIGN

6 Venture, Suite 275 949.341.0066 t
Irvine, California 92618 949.341.0099 f

DLR Group WWCOT
Architecture Engineering Planning Interiors

4280 Latham Street, Suite H 951.682.0470 t
Riverside, California 92501 951.682.1801 f

LICENSED ARCHITECT SCOTT BRAYTON BERMAN C-22700 EXP. 9-30-13 STATE OF CALIFORNIA

Public Agency Submittal:
Issued for Bidding:
Issued for Construction:

Revisions:

A 09.15.2011 PERMIT SET

PHASE II:
FOX ENTERTAINMENT PLAZA:
PARKING GARAGE

3601 Market Street
Riverside, CA 92501

CITY of RIVERSIDE

CITY OF RIVERSIDE

3900 Main Street, Riverside, CA 92522

Phase:
Revised 04.19.2011
PPD Project № 10-101

TYPICAL SECTION DETAILS

Issued Date: 05.02.2011
Drawn By: RTR
Checked By: SBH

PA-6.01
Sheet №

File Path & Name: C:\Dimension Z\PPD\Projects\2009 - Fox Plaza Parking Structure (Bayley)\Fox PPD Revit\PPD Fox Theater Parking Garage_Owner.rvt
© WWCOT 2009 – Plotted 9/13/2011 10:45:43 AM

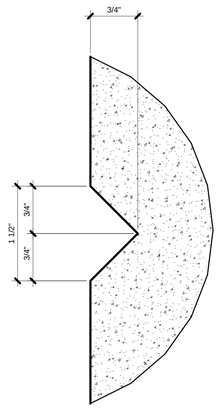

6 PA-6.02 TYPICAL REVEAL DETAIL
12" = 1'-0"

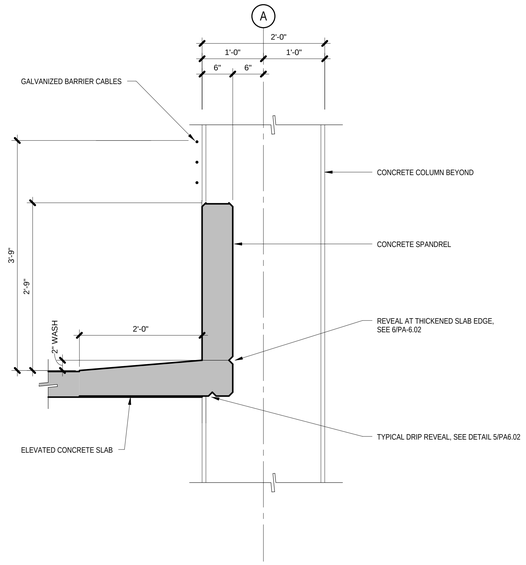

2 PA-6.02 TYPICAL SPANDREL DETAIL - INTERMEDIATE LEVEL RAMP
1" = 1'-0"

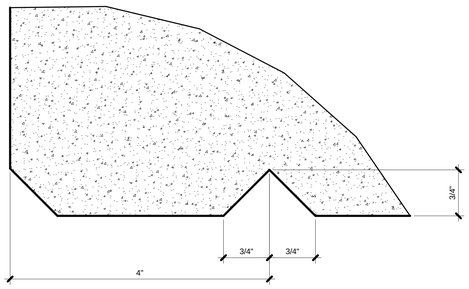

5 PA-6.02 TYPICAL DRIP REVEAL DETAIL
12" = 1'-0"

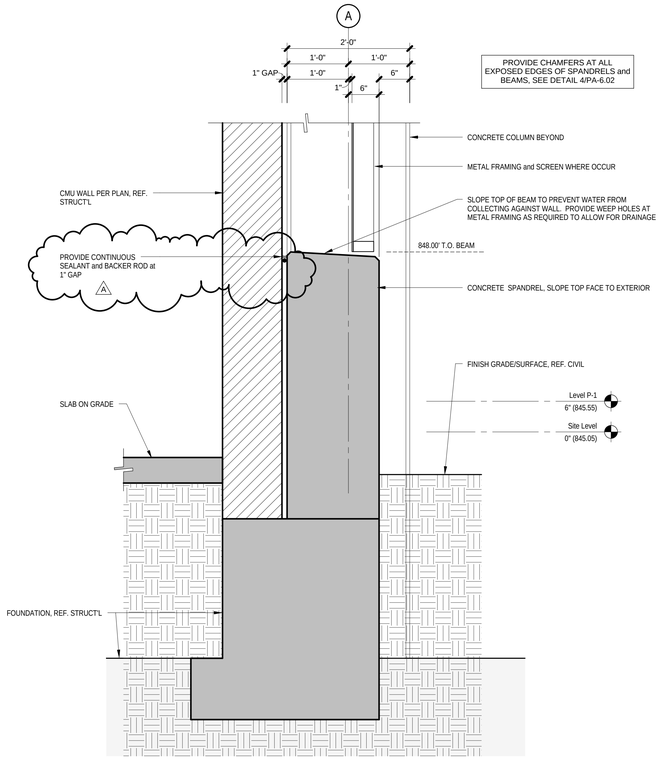

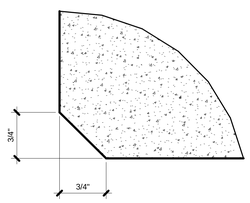

4 PA-6.02 TYPICAL CHAMFER DETAIL
12" = 1'-0"

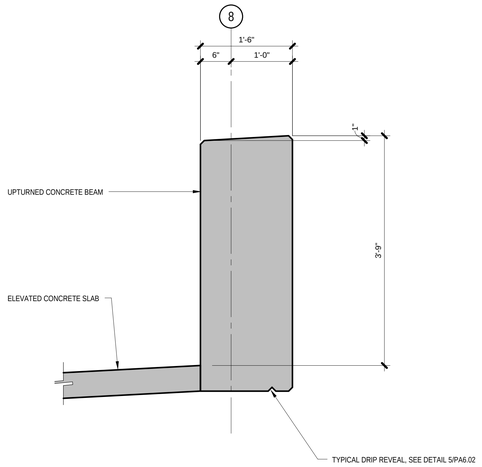

3 PA-6.02 TYPICAL UPTURNED BEAM DETAIL
1" = 1'-0"

1 PA-6.02 TYPICAL WIDE SPANDREL DETAIL - LEVEL P-1
1" = 1'-0"

Bayley Construction
3730 S. Susan St.
Suite 200
Santa Ana, CA. 92704
CA. License 734880
Tel 714-540-8863
Fax 714-556-8863

Bayley Construction
8005 S.E. 28th St.
P.O. Box 9004
Mercer Island, WA. 98040
WA. License BAYLECO343JC
Tel 206-621-8884
Fax 206-343-7728

Pacific Parking DESIGN
6 Venture, Suite 275 949.341.0066 t
Irvine, California 92618 949.341.0099 f

DLR Group WWCOT
Architecture Engineering Planning Interiors
4280 Latham Street, Suite H 951.682.0470 t
Riverside, California 92501 951.682.1801 f

LICENSED ARCHITECT
SCOTT BRAYTON BERMAN
C-22700
EXP. 9-30-13
STATE OF CALIFORNIA

Public Agency Submittal:
Issued for Bidding:
Issued for Construction:

Revisions:

A 09.15.2011 PERMIT SET

PHASE II:
FOX
ENTERTAINMENT
PLAZA:
PARKING GARAGE

3601 Market Street
Riverside, CA 92501

CITY of RIVERSIDE

CITY OF RIVERSIDE

3900 Main Street, Riverside, CA 92522

Phase:
Revised 04.19.2011
PPD Project № 10-101

TYPICAL SECTION DETAILS

Issued Date: 05.02.2011
Drawn By: RTR
Checked By: SBH

PA-6.02
Sheet №

File Path & Name: C:\Dimension Z\PPD\Projects\2009 - Fox Plaza Parking Structure (Bayley)\Fox PPD Revit\PPD Fox Theater Parking Garage_Owner.rvt
© WWCOT 2009 - Plotted 9/13/2011 10:46:11 AM

MARK	KEYNOTE DESCRIPTION
1	CONCRETE FOOTING (REF. STRUCT'L. DRAWINGS)
2	GRADE/FINISHED EXTERIOR SURFACE (REF. CIVIL DRAWINGS)
3	CMU RETAINING WALL (REF. STRUCT'L DRAWINGS)
4	CONCRETE FLOOR SLAB ON GRADE
5	CONCRETE RAMP SLAB ON GRADE
6	CAST-IN-PLACE CONCRETE MOMENT FRAME COLUMN
7	CAST-IN-PLACE CONCRETE GRAVITY COLUMN
8	CAST-IN-PLACE CONCRETE GIRDER
9	CAST-IN-PLACE CONCRETE BEAM
10	CAST-IN-PLACE CONCRETE SPANDREL
11	CAST-IN-PLACE CONCRETE MOMENT FRAME BEAM
12	ELEVATED CONCRETE FLOOR SLAB
13	ELEVATED CONCRETE RAMP SLAB
14	CMU HOISTWAY
15	GALVANIZED BARRIER CABLES
16	BARRIER BEAM ASSEMBLY (REF. A-10 SHEETS)
17	SIGNAGE (REF. A-10 SHEETS)
19	REVEAL
20	CONCRETE FILLED, METAL PAN STAIRS (PAINTED)
21	METAL GUARDRAIL (PAINTED)

MARK	KEYNOTE DESCRIPTION
22	METAL STUD & PLASTER WALL
24	METAL FRAMED FACADE
25	METAL SCREENED FACADE
26	STOREFRONT FRAMING with GLAZING (MATCH EXISTING THEATRE)
27	DECORATIVE LANTERN - FOAM (MATCH EXISTING THEATRE)
28	MEDALLION - FOAM (MATCH EXISTING THEATRE)
29	METAL STUD and EIFS CORNICE
30	METAL DOOR (PAINTED)
31	ADJACENT STRUCTURE
32	CMU WALL (REF. STRUCT'L DRAWINGS)
33	CONCRETE-FILLED STEEL PIPE BOLLARD
34	DECORATIVE METAL
35	UPTURNED CAST-IN-PLACE CONCRETE SPANDREL BEAM
36	STAIR COLUMN
37	PEDESTRIAN GATE WITH PANIC HARDWARE (PAINTED)
38	METAL SLIDING TRASH ENCLOSURE GATE (PAINTED)
39	CONCRETE-FILLED METAL DECK
40	METAL HANDRAIL (PAINTED)
41	CONCRETE STAIRS OVER FOAM (REF. STRUCT'L DRAWINGS)

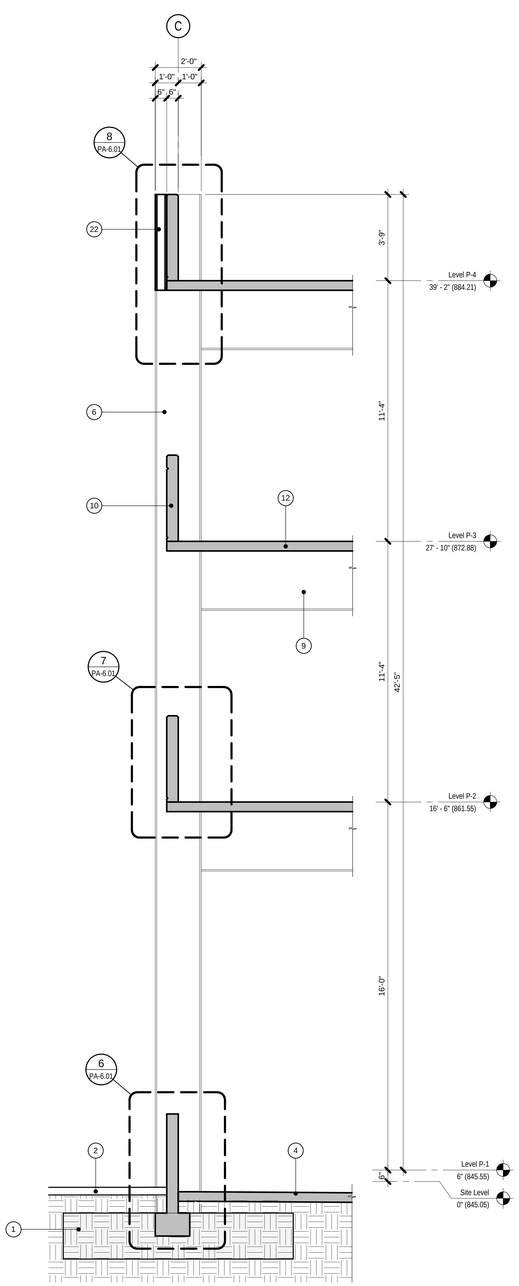

4 PA-6.1 4 - WALL SECTION at LINE C/10
3/8" = 1'-0"

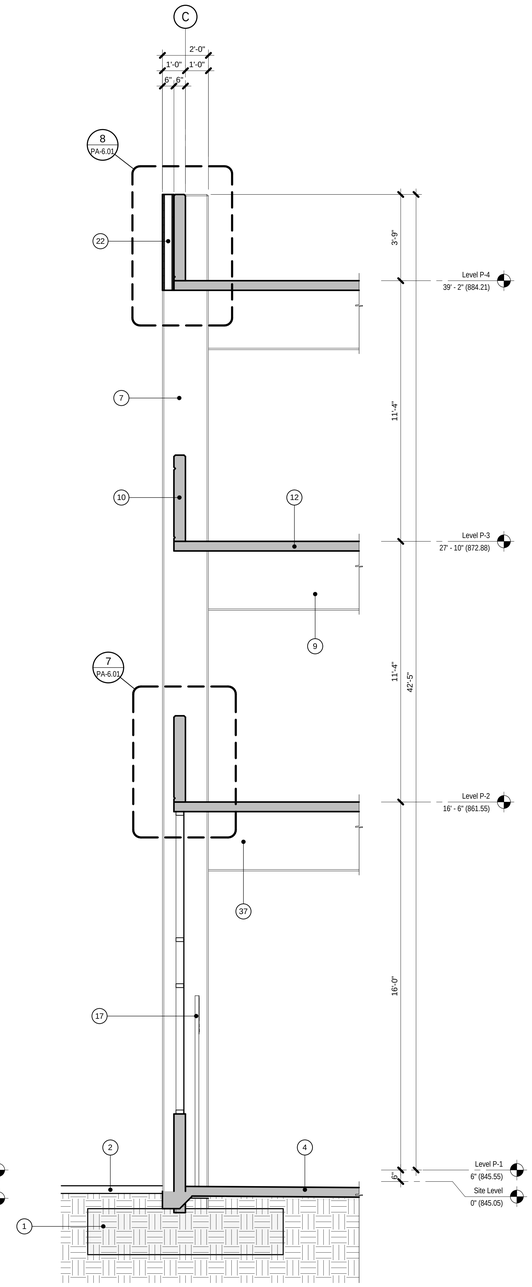

3 PA-6.1 3 - WALL SECTION at LINE C/11
3/8" = 1'-0"

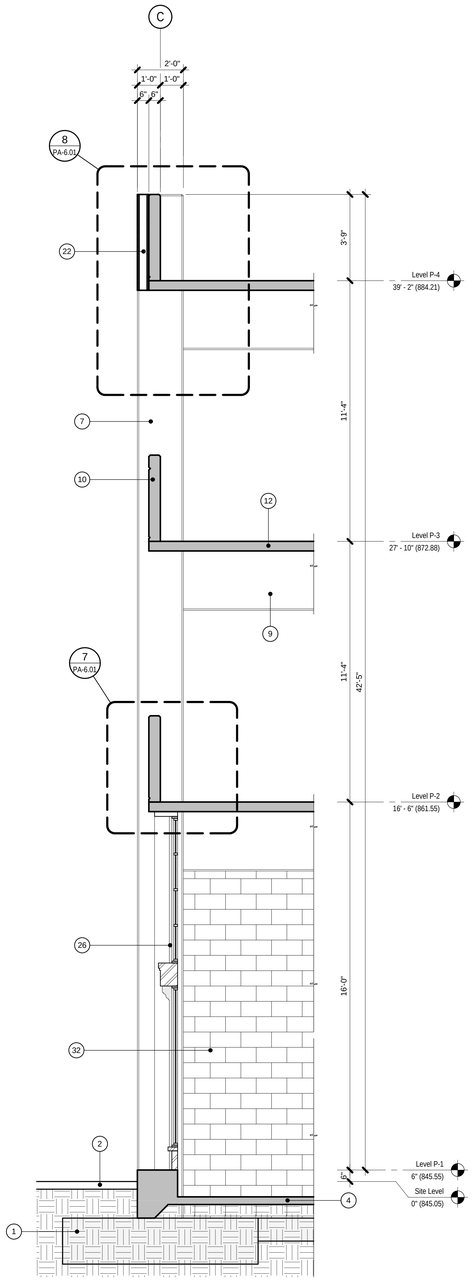

2 PA-6.1 2 - WALL SECTION at LINE C/13
3/8" = 1'-0"

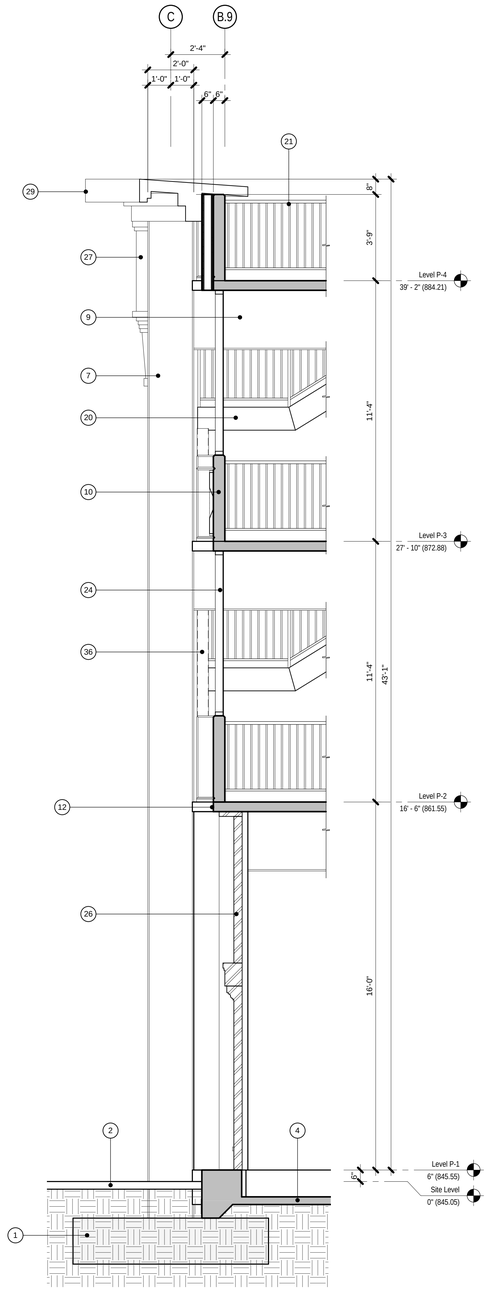

1 PA-6.1 1 - WALL SECTION at LINE C/17
3/8" = 1'-0"

Bayley Construction
3730 S. Susan St.
Suite 200
Santa Ana, CA. 92704
CA. License 734880
Tel 714-540-8863
Fax 714-556-8863

Bayley Construction
8005 S.E. 28th St.
P.O. Box 9004
Mercer Island, WA. 98040
WA. License BAYLECO343C
Tel 206-621-8884
Fax 206-343-7728

Pacific Parking DESIGN
6 Venture, Suite 275 949.341.0066 t
Irvine, California 92618 949.341.0099 f

DLR Group WWCOT
Architecture Engineering Planning Interiors
4280 Latham Street, Suite H 951.682.0470 t
Riverside, California 92501 951.682.1801 f

LICENSED ARCHITECT
SCOTT BRAYTON BERMAN
C-22700
EXP. 9-30-13
STATE OF CALIFORNIA

Public Agency Submittal:
Issued for Bidding:
Issued for Construction:

Revisions:

A 09.15.2011 PERMIT SET

PHASE II: FOX ENTERTAINMENT PLAZA: PARKING GARAGE

3601 Market Street
Riverside, CA 92501

CITY of RIVERSIDE

CITY OF RIVERSIDE

3900 Main Street, Riverside, CA 92522

Phase:
Revised 04.19.2011
PPD Project № 10-101

WALL SECTIONS

Issued Date: 05.02.2011
Drawn By: RTR
Checked By: SBH

PA-6.1

Sheet №

File Path & Name: C:\Dimension Z\PPD\Projects\2009 - Fox Plaza Parking Structure (Bayley)\Fox PPD Revit\PPD Fox Theater Parking Garage_Owner.rvt
© WWCOT 2009 – Plotted 9/13/2011 10:52:04 AM

MARK	KEYNOTE DESCRIPTION
1	CONCRETE FOOTING (REF. STRUCT'L. DRAWINGS)
2	GRADE/FINISHED EXTERIOR SURFACE (REF. CIVIL DRAWINGS)
3	CMU RETAINING WALL (REF. STRUCT'L DRAWINGS)
4	CONCRETE FLOOR SLAB ON GRADE
5	CONCRETE RAMP SLAB ON GRADE
6	CAST-IN-PLACE CONCRETE MOMENT FRAME COLUMN
7	CAST-IN-PLACE CONCRETE GRAVITY COLUMN
8	CAST-IN-PLACE CONCRETE GIRDER
9	CAST-IN-PLACE CONCRETE BEAM
10	CAST-IN-PLACE CONCRETE SPANDREL
11	CAST-IN-PLACE CONCRETE MOMENT FRAME BEAM
12	ELEVATED CONCRETE FLOOR SLAB
13	ELEVATED CONCRETE RAMP SLAB
14	CMU HOISTWAY
15	GALVANIZED BARRIER CABLES
16	BARRIER BEAM ASSEMBLY (REF. A-10 SHEETS)
17	SIGNAGE (REF. A-10 SHEETS)
19	REVEAL
20	CONCRETE FILLED, METAL PAN STAIRS (PAINTED)
21	METAL GUARDRAIL (PAINTED)

MARK	KEYNOTE DESCRIPTION
22	METAL STUD & PLASTER WALL
24	METAL FRAMED FACADE
25	METAL SCREENED FACADE
26	STOREFRONT FRAMING with GLAZING (MATCH EXISTING THEATRE)
27	DECORATIVE LANTERN - FOAM (MATCH EXISTING THEATRE)
28	MEDALLION - FOAM (MATCH EXISTING THEATRE)
29	METAL STUD and EIFS CORNICE
30	METAL DOOR (PAINTED)
31	ADJACENT STRUCTURE
32	CMU WALL (REF. STRUCT'L DRAWINGS)
33	CONCRETE-FILLED STEEL PIPE BOLLARD
34	DECORATIVE METAL
35	UPTURNED CAST-IN-PLACE CONCRETE SPANDREL BEAM
36	STAIR COLUMN
37	PEDESTRIAN GATE WITH PANIC HARDWARE (PAINTED)
38	METAL SLIDING TRASH ENCLOSURE GATE (PAINTED)
39	CONCRETE-FILLED METAL DECK
40	METAL HANDRAIL (PAINTED)
41	CONCRETE STAIRS OVER FOAM (REF. STRUCT'L DRAWINGS)

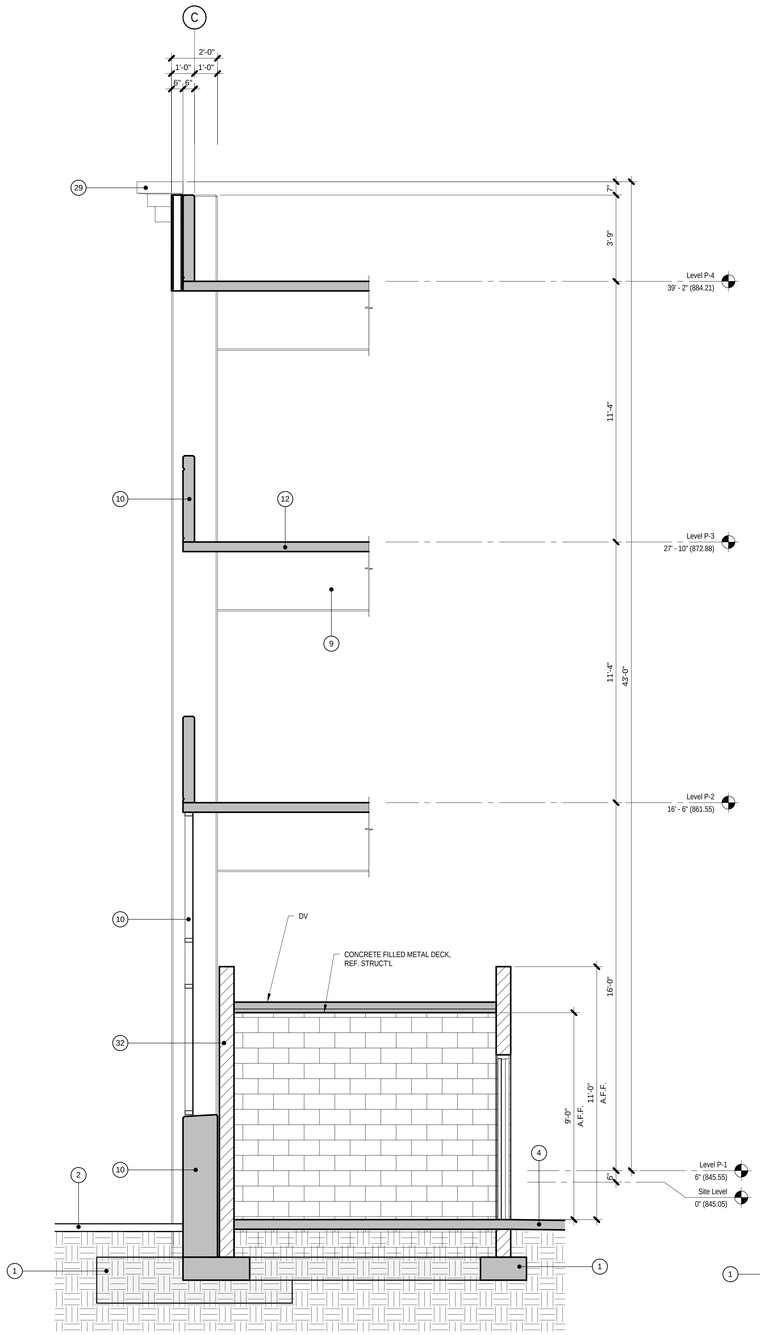

8 PA-6.2 — 8 - WALL SECTION at LINE C/2
3/8" = 1'-0"

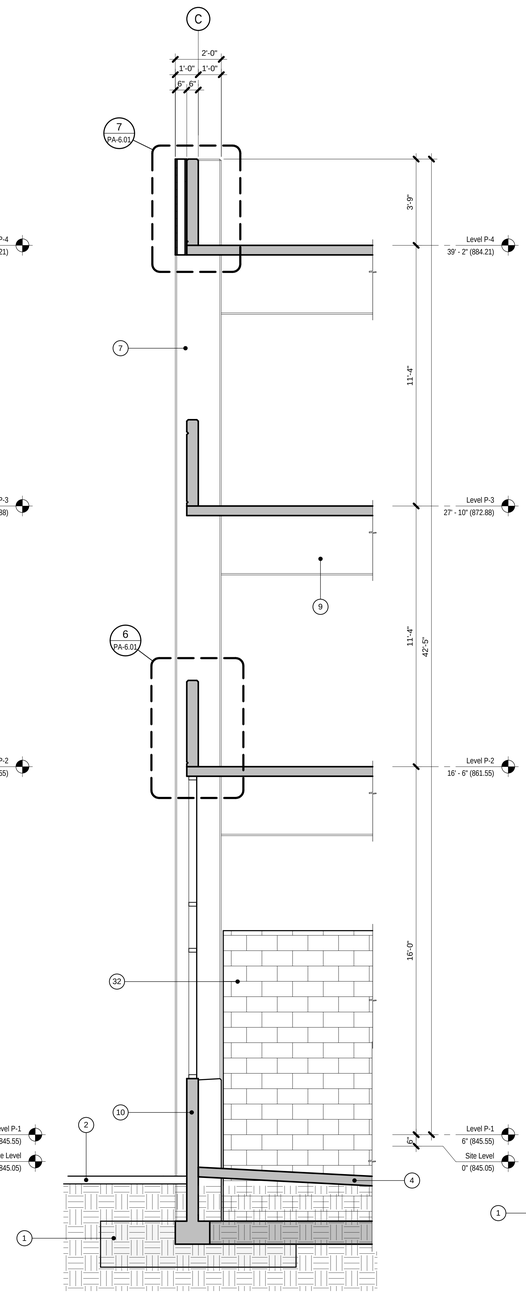

7 PA-6.2 — 7 - WALL SECTION at LINE C/3
3/8" = 1'-0"

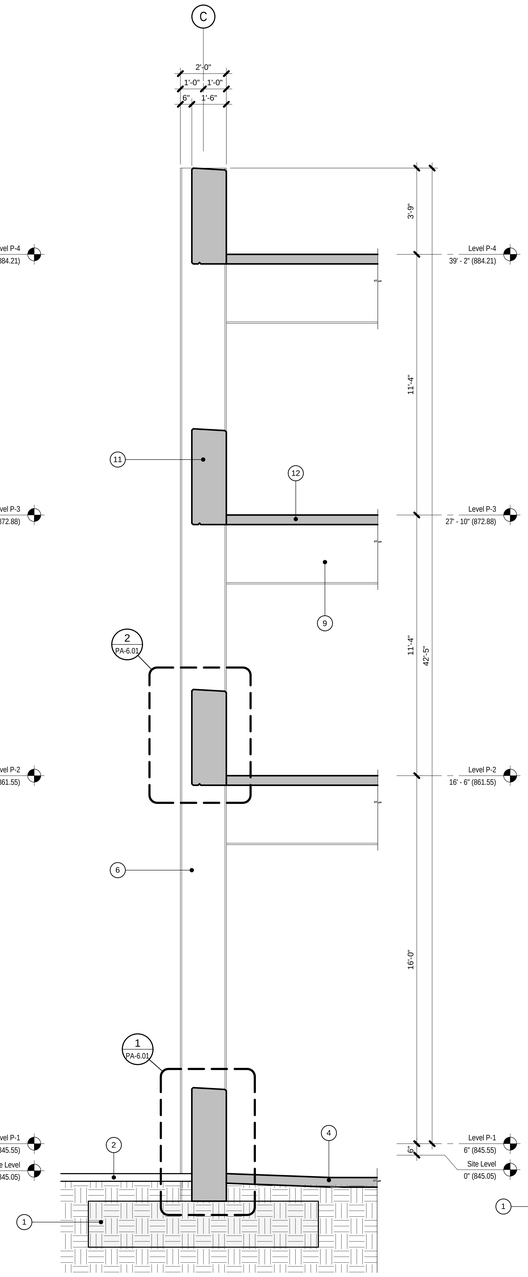

6 PA-6.2 — 6 - WALL SECTION at LINE C/4
3/8" = 1'-0"

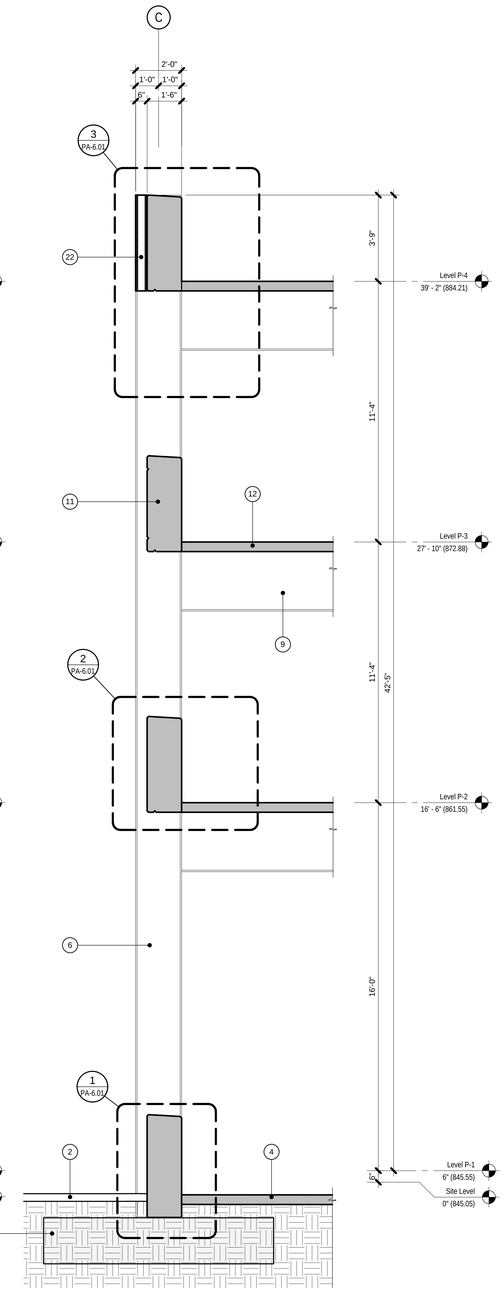

5 PA-6.2 — 5 - WALL SECTION at LINE C/9
3/8" = 1'-0"

Bayley Construction
3730 S. Susan St.
Suite 200
Santa Ana, CA. 92704
CA. License 734880
Tel 714-540-8863
Fax 714-556-8863

Bayley Construction
8005 S.E. 28th St.
P.O. Box 9004
Mercer Island, WA. 98040
WA. License BAYLECO343JC
Tel 206-621-8884
Fax 206-343-7728

Pacific Parking DESIGN
6 Venture, Suite 275 949.341.0066 t
Irvine, California 92618 949.341.0099 f

DLR Group WWCOT
Architecture Engineering Planning Interiors
4280 Latham Street, Suite H 951.682.0470 t
Riverside, California 92501 951.682.1801 f

LICENSED ARCHITECT
SCOTT BRAYTON BERMAN
C-22700
EXP. 9-30-13
STATE OF CALIFORNIA

Public Agency Submittal:
Issued for Bidding:
Issued for Construction:

Revisions:

A 09.15.2011 PERMIT SET

PHASE II: FOX ENTERTAINMENT PLAZA: PARKING GARAGE

3601 Market Street
Riverside, CA 92501

CITY of RIVERSIDE

CITY OF RIVERSIDE

3900 Main Street, Riverside, CA 92522

Phase:
Revised 04.19.2011
PPD Project № 10-101

WALL SECTIONS

Issued Date: 05.02.2011
Drawn By: RTR
Checked By: SBH

PA-6.2

Sheet №

File Path & Name: C:\Dimension Z\PPD\Projects\2009 - Fox Plaza Parking Structure (Bayley)\Fox PPD Revit\PPD Fox Theater Parking Garage_Owner.rvt
© WWCOT 2009 – Plotted 9/13/2011 10:52:26 AM

MARK	KEYNOTE DESCRIPTION
1	CONCRETE FOOTING (REF. STRUCT'L. DRAWINGS)
2	GRADE/FINISHED EXTERIOR SURFACE (REF. CIVIL DRAWINGS)
3	CMU RETAINING WALL (REF. STRUCT'L DRAWINGS)
4	CONCRETE FLOOR SLAB ON GRADE
5	CONCRETE RAMP SLAB ON GRADE
6	CAST-IN-PLACE CONCRETE MOMENT FRAME COLUMN
7	CAST-IN-PLACE CONCRETE GRAVITY COLUMN
8	CAST-IN-PLACE CONCRETE GIRDER
9	CAST-IN-PLACE CONCRETE BEAM
10	CAST-IN-PLACE CONCRETE SPANDREL
11	CAST-IN-PLACE CONCRETE MOMENT FRAME BEAM
12	ELEVATED CONCRETE FLOOR SLAB
13	ELEVATED CONCRETE RAMP SLAB
14	CMU HOISTWAY
15	GALVANIZED BARRIER CABLES
16	BARRIER BEAM ASSEMBLY (REF. A-10 SHEETS)
17	SIGNAGE (REF. A-10 SHEETS)
19	REVEAL
20	CONCRETE FILLED, METAL PAN STAIRS (PAINTED)
21	METAL GUARDRAIL (PAINTED)

MARK	KEYNOTE DESCRIPTION
22	METAL STUD & PLASTER WALL
24	METAL FRAMED FACADE
25	METAL SCREENED FACADE
26	STOREFRONT FRAMING with GLAZING (MATCH EXISTING THEATRE)
27	DECORATIVE LANTERN - FOAM (MATCH EXISTING THEATRE)
28	MEDALLION - FOAM (MATCH EXISTING THEATRE)
29	METAL STUD and EIFS CORNICE
30	METAL DOOR (PAINTED)
31	ADJACENT STRUCTURE
32	CMU WALL (REF. STRUCT'L DRAWINGS)
33	CONCRETE-FILLED STEEL PIPE BOLLARD
34	DECORATIVE METAL
35	UPTURNED CAST-IN-PLACE CONCRETE SPANDREL BEAM
36	STAIR COLUMN
37	PEDESTRIAN GATE WITH PANIC HARDWARE (PAINTED)
38	METAL SLIDING TRASH ENCLOSURE GATE (PAINTED)
39	CONCRETE-FILLED METAL DECK
40	METAL HANDRAIL (PAINTED)
41	CONCRETE STAIRS OVER FOAM (REF. STRUCT'L DRAWINGS)

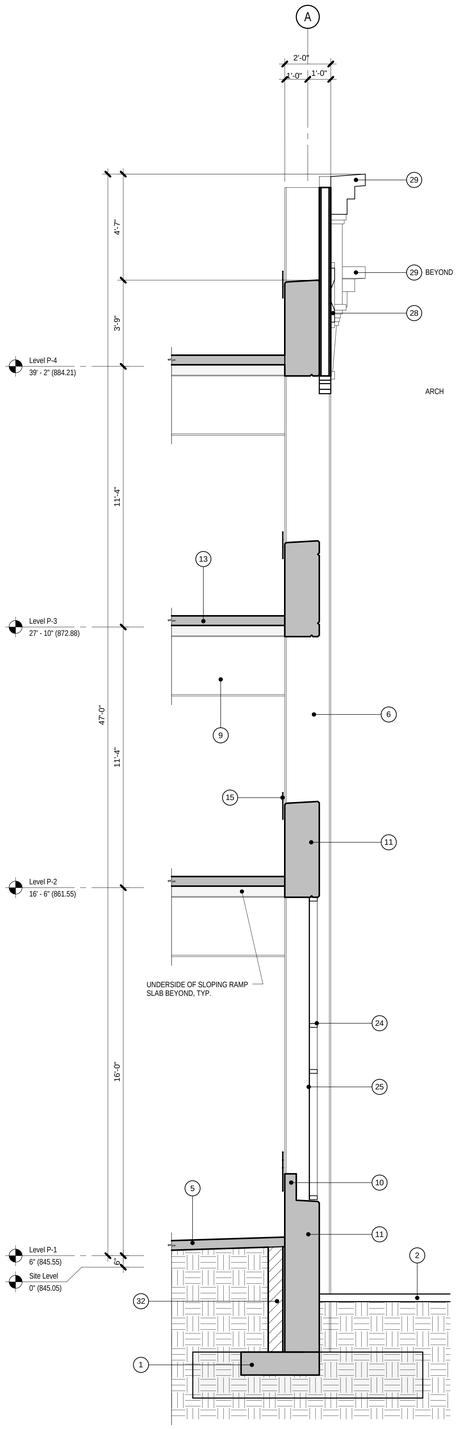

12 PA-6.3 12 - WALL SECTION at LINE A/4
3/8" = 1'-0"

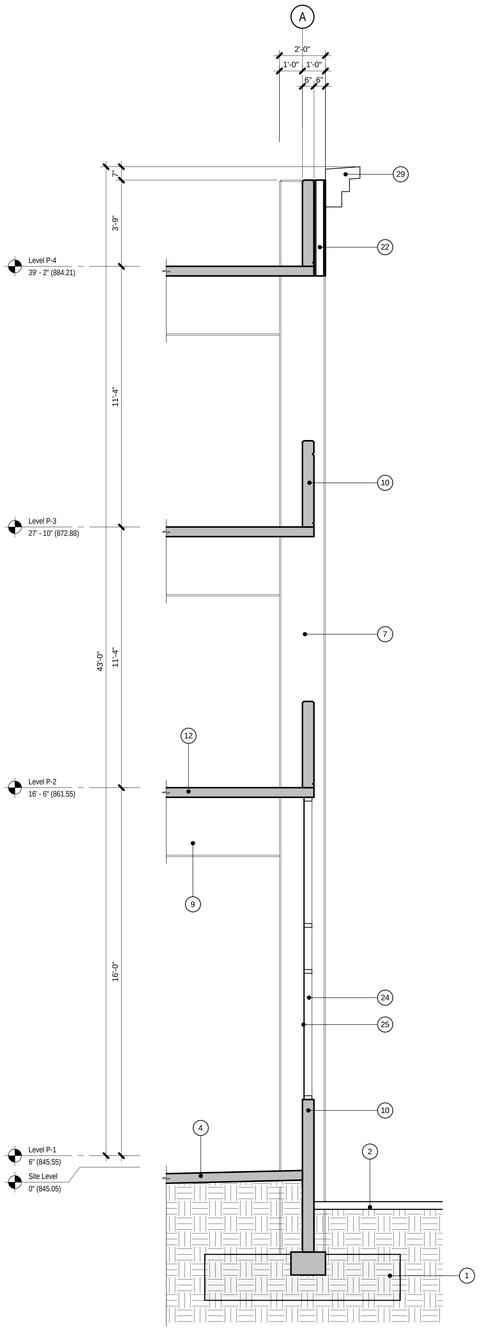

11 PA-6.3 11 - WALL SECTION at LINE A/3
3/8" = 1'-0"

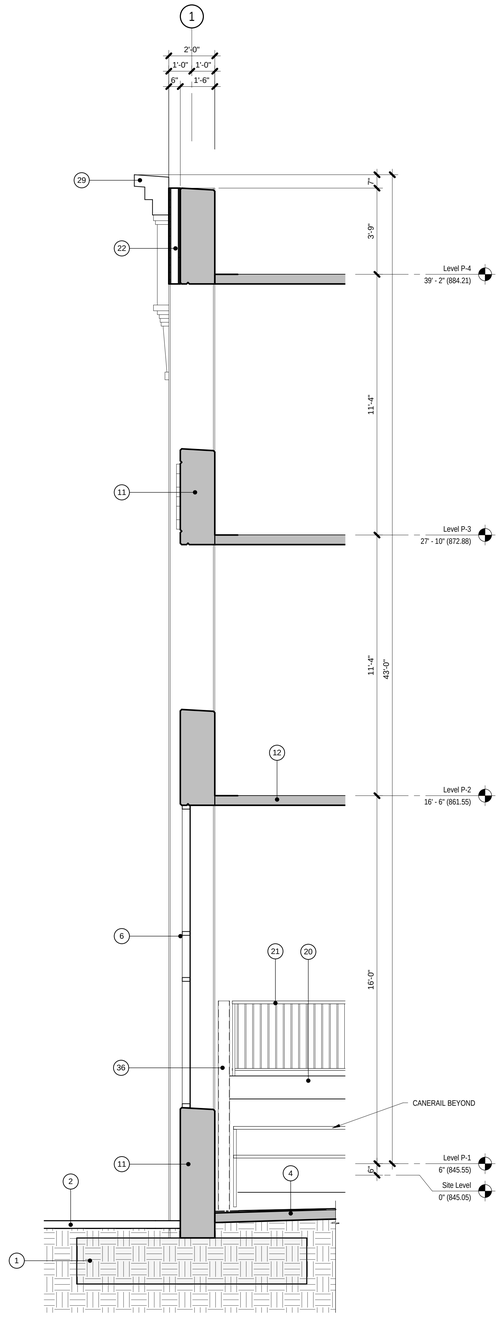

10 PA-6.3 10 - WALL SECTION at LINE 1/A.3
3/8" = 1'-0"

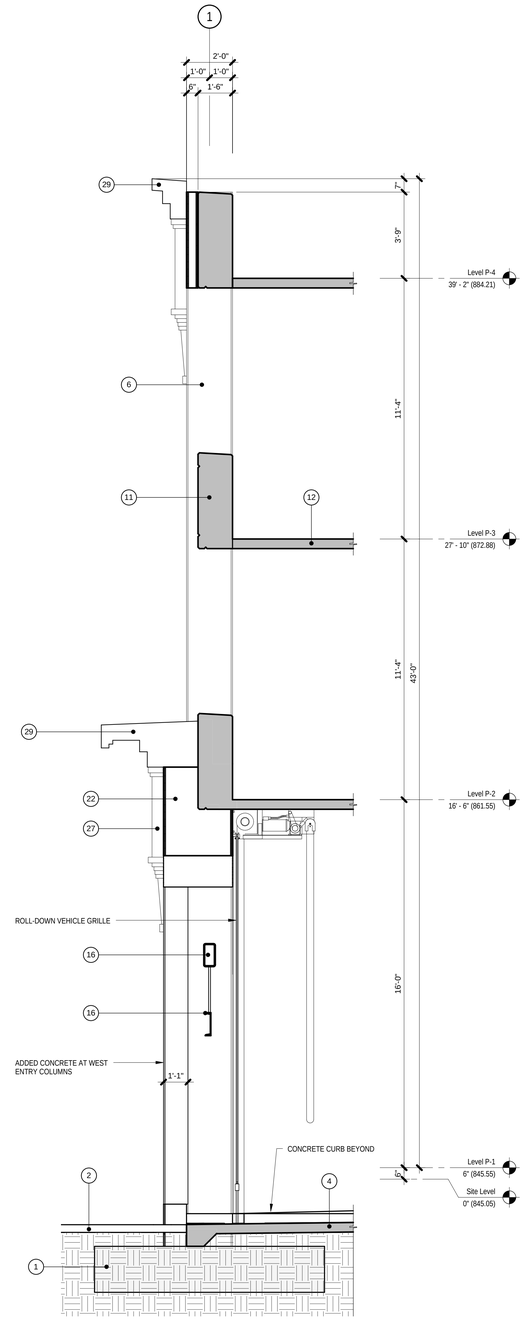

9 PA-6.3 9 - WALL SECTION at LINE 1/B
3/8" = 1'-0"

Bayley Construction
3730 S. Susan St.
Suite 200
Santa Ana, CA. 92704
CA. License 734880
Tel 714-540-8863
Fax 714-556-8863

Bayley Construction
8005 S.E. 28th St.
P.O. Box 9004
Mercer Island, WA. 98040
WA. License BAYLECO343C
Tel 206-621-8884
Fax 206-343-7728

Pacific Parking DESIGN
6 Venture, Suite 275 949.341.0066 t
Irvine, California 92618 949.341.0099 f

DLR Group WWCOT
Architecture Engineering Planning Interiors
4280 Latham Street, Suite H 951.682.0470 t
Riverside, California 92501 951.682.1801 f

LICENSED ARCHITECT
SCOTT BRAYTON BERMAN
C-22700
EXP. 9-30-13
STATE OF CALIFORNIA

Public Agency Submittal:
Issued for Bidding:
Issued for Construction:

Revisions:

A 09.15.2011 PERMIT SET

PHASE II: FOX ENTERTAINMENT PLAZA: PARKING GARAGE

3601 Market Street
Riverside, CA 92501

CITY of RIVERSIDE

CITY OF RIVERSIDE

3900 Main Street, Riverside, CA 92522

Phase:
Revised 04.19.2011
PPD Project № 10-101

WALL SECTIONS

Issued Date: 05.02.2011
Drawn By: RTR
Checked By: SBH

PA-6.3
Sheet №

File Path & Name: C:\Dimension Z\PPD\Projects\2009 - Fox Plaza Parking Structure (Bayley)\Fox PPD Revit\PPD Fox Theater Parking Garage_Owner.rvt
© WWCOT 2009 – Plotted 9/13/2011 10:52:48 AM

MARK	KEYNOTE DESCRIPTION
1	CONCRETE FOOTING (REF. STRUCT'L. DRAWINGS)
2	GRADE/FINISHED EXTERIOR SURFACE (REF. CIVIL DRAWINGS)
3	CMU RETAINING WALL (REF. STRUCT'L DRAWINGS)
4	CONCRETE FLOOR SLAB ON GRADE
5	CONCRETE RAMP SLAB ON GRADE
6	CAST-IN-PLACE CONCRETE MOMENT FRAME COLUMN
7	CAST-IN-PLACE CONCRETE GRAVITY COLUMN
8	CAST-IN-PLACE CONCRETE GIRDER
9	CAST-IN-PLACE CONCRETE BEAM
10	CAST-IN-PLACE CONCRETE SPANDREL
11	CAST-IN-PLACE CONCRETE MOMENT FRAME BEAM
12	ELEVATED CONCRETE FLOOR SLAB
13	ELEVATED CONCRETE RAMP SLAB
14	CMU HOISTWAY
15	GALVANIZED BARRIER CABLES
16	BARRIER BEAM ASSEMBLY (REF. A-10 SHEETS)
17	SIGNAGE (REF. A-10 SHEETS)
19	REVEAL
20	CONCRETE FILLED, METAL PAN STAIRS (PAINTED)
21	METAL GUARDRAIL (PAINTED)

MARK	KEYNOTE DESCRIPTION
22	METAL STUD & PLASTER WALL
24	METAL FRAMED FACADE
25	METAL SCREENED FACADE
26	STOREFRONT FRAMING with GLAZING (MATCH EXISTING THEATRE)
27	DECORATIVE LANTERN - FOAM (MATCH EXISTING THEATRE)
28	MEDALLION - FOAM (MATCH EXISTING THEATRE)
29	METAL STUD and EIFS CORNICE
30	METAL DOOR (PAINTED)
31	ADJACENT STRUCTURE
32	CMU WALL (REF. STRUCT'L DRAWINGS)
33	CONCRETE-FILLED STEEL PIPE BOLLARD
34	DECORATIVE METAL
35	UPTURNED CAST-IN-PLACE CONCRETE SPANDREL BEAM
36	STAIR COLUMN
37	PEDESTRIAN GATE WITH PANIC HARDWARE (PAINTED)
38	METAL SLIDING TRASH ENCLOSURE GATE (PAINTED)
39	CONCRETE-FILLED METAL DECK
40	METAL HANDRAIL (PAINTED)
41	CONCRETE STAIRS OVER FOAM (REF. STRUCT'L DRAWINGS)

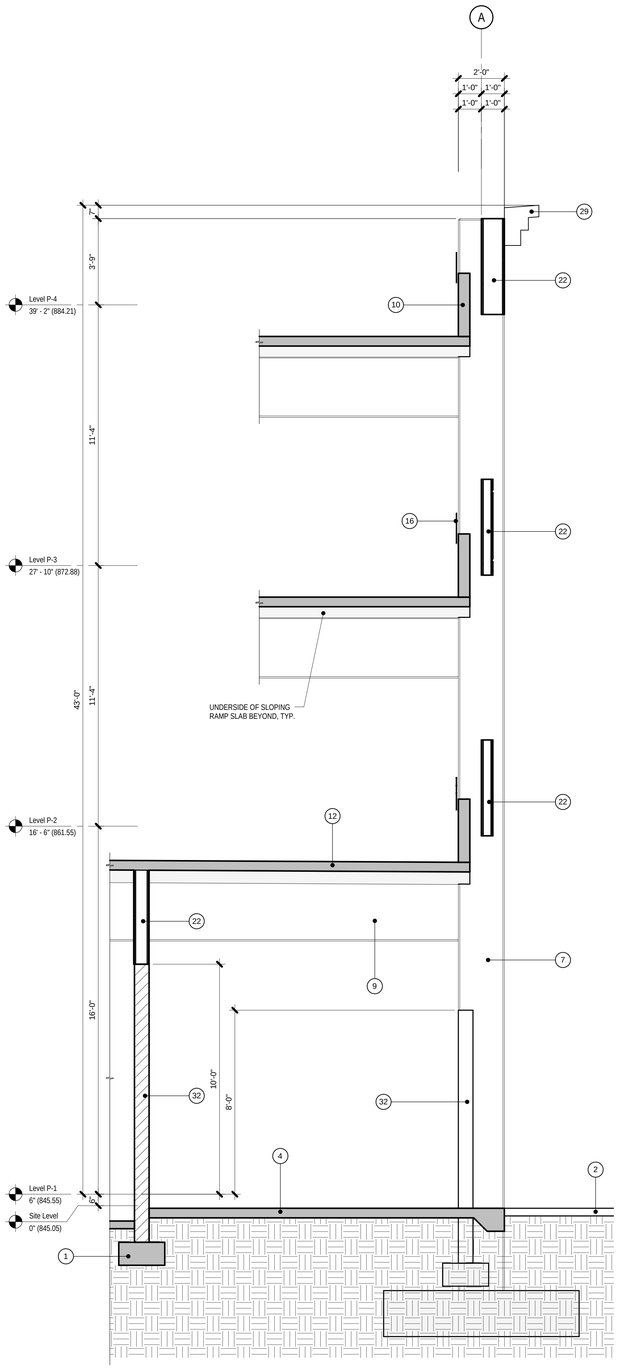

16 / PA-6.4 16 - WALL SECTION at LINE A/14

3/8" = 1'-0"

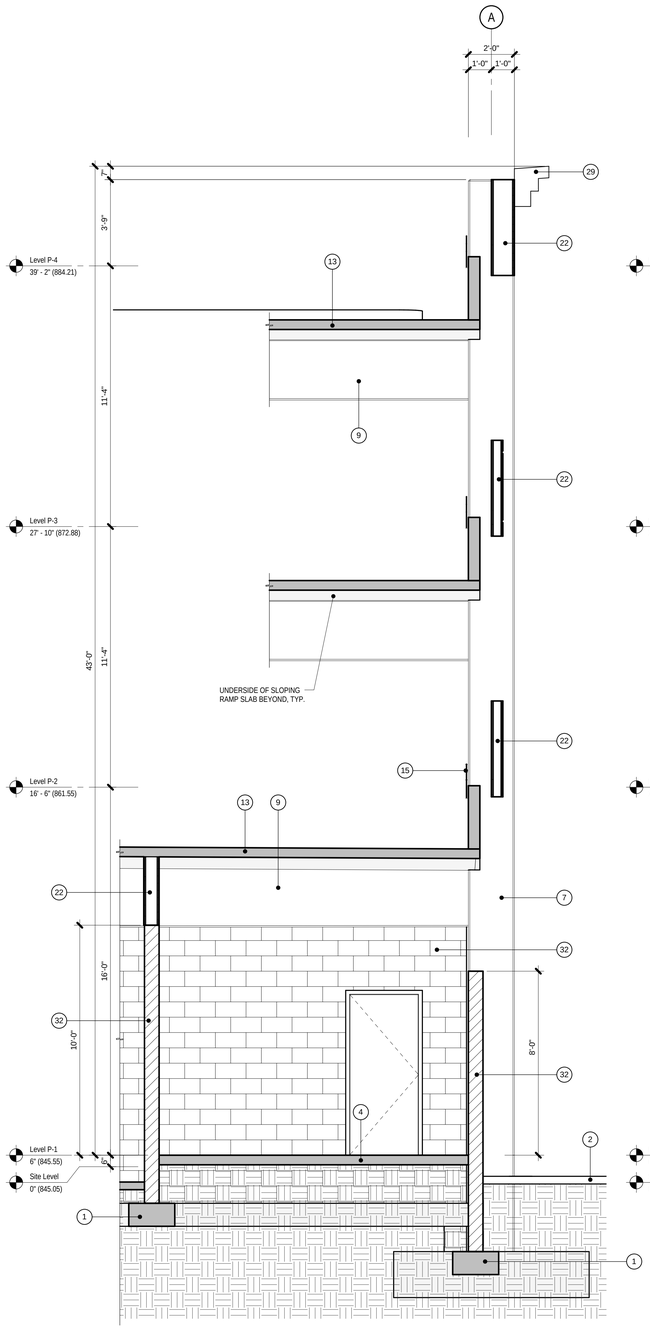

15 / PA-6.4 15 - WALL SECTION at LINE A/13

3/8" = 1'-0"

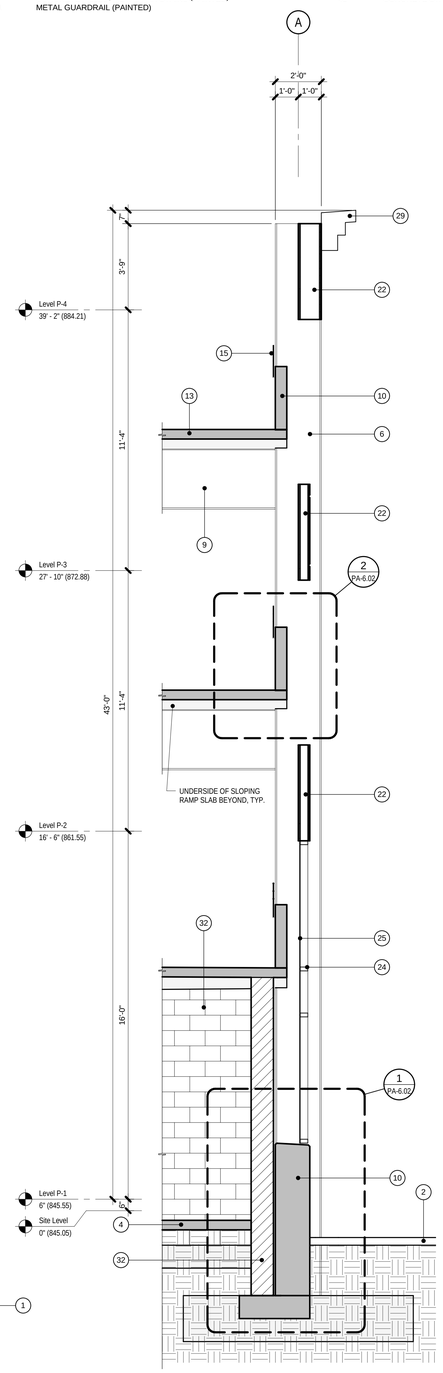

14 / PA-6.4 14 - WALL SECTION at LINE A/10

3/8" = 1'-0"

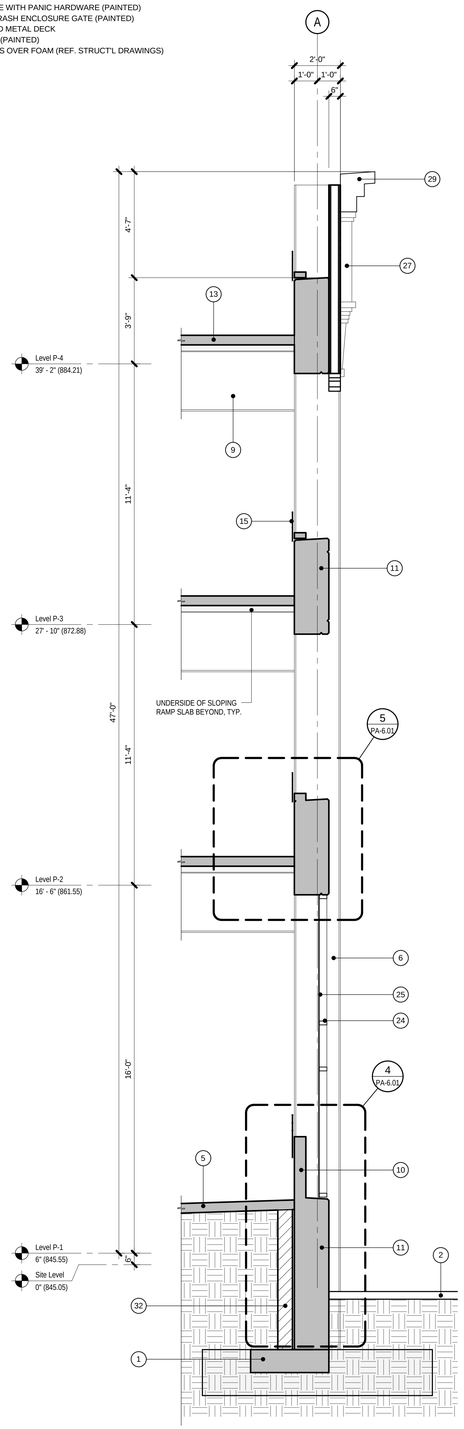

13 / PA-6.4 13 - WALL SECTION at LINE A/5

3/8" = 1'-0"

Bayley Construction
3730 S. Susan St.
Suite 200
Santa Ana, CA. 92704
CA. License 734880
Tel 714-540-8863
Fax 714-556-8863

Bayley Construction
8005 S.E. 28th St.
P.O. Box 9004
Mercer Island, WA. 98040
WA. License BAYLECO343C
Tel 206-621-8884
Fax 206-343-7728

Pacific Parking DESIGN
6 Venture, Suite 275 949.341.0066 t
Irvine, California 92618 949.341.0099 f

DLR Group WWCOT
Architecture Engineering Planning Interiors
4280 Latham Street, Suite H 951.682.0470 t
Riverside, California 92501 951.682.1801 f

LICENSED ARCHITECT
SCOTT BRAYTON BERMAN
C-22700
EXP. 9-30-13
STATE OF CALIFORNIA

Public Agency Submittal:
Issued for Bidding:
Issued for Construction:

Revisions:

A 09.15.2011 PERMIT SET

PHASE II: FOX ENTERTAINMENT PLAZA: PARKING GARAGE

3601 Market Street
Riverside, CA 92501

CITY of RIVERSIDE

CITY OF RIVERSIDE

3900 Main Street, Riverside, CA 92522

Phase:
Revised 04.19.2011
PPD Project № 10-101

WALL SECTIONS

Issued Date: 05.02.2011
Drawn By: RTR
Checked By: SBH

PA-6.4
Sheet №

File Path & Name: C:\Dimension 7\PPD\Projects\2009 - Fox Plaza Parking Structure (Bayley)\Fox PPD Revit\PPD Fox Theater Parking Garage_Owner.rvt
© WWCOT 2009 -- Plotted 9/13/2011 10:53:09 AM

MARK	KEYNOTE DESCRIPTION
1	CONCRETE FOOTING (REF. STRUCT'L. DRAWINGS)
2	GRADE/FINISHED EXTERIOR SURFACE (REF. CIVIL DRAWINGS)
3	CMU RETAINING WALL (REF. STRUCT'L DRAWINGS)
4	CONCRETE FLOOR SLAB ON GRADE
5	CONCRETE RAMP SLAB ON GRADE
6	CAST-IN-PLACE CONCRETE MOMENT FRAME COLUMN
7	CAST-IN-PLACE CONCRETE GRAVITY COLUMN
8	CAST-IN-PLACE CONCRETE GIRDER
9	CAST-IN-PLACE CONCRETE BEAM
10	CAST-IN-PLACE CONCRETE SPANDREL
11	CAST-IN-PLACE CONCRETE MOMENT FRAME BEAM
12	ELEVATED CONCRETE FLOOR SLAB
13	ELEVATED CONCRETE RAMP SLAB
14	CMU HOISTWAY
15	GALVANIZED BARRIER CABLES
16	BARRIER BEAM ASSEMBLY (REF. A-10 SHEETS)
17	SIGNAGE (REF. A-10 SHEETS)
19	REVEAL
20	CONCRETE FILLED, METAL PAN STAIRS (PAINTED)
21	METAL GUARDRAIL (PAINTED)

MARK	KEYNOTE DESCRIPTION
22	METAL STUD & PLASTER WALL
24	METAL FRAMED FACADE
25	METAL SCREENED FACADE
26	STOREFRONT FRAMING with GLAZING (MATCH EXISTING THEATRE)
27	DECORATIVE LANTERN - FOAM (MATCH EXISTING THEATRE)
28	MEDALLION - FOAM (MATCH EXISTING THEATRE)
29	METAL STUD and EIFS CORNICE
30	METAL DOOR (PAINTED)
31	ADJACENT STRUCTURE
32	CMU WALL (REF. STRUCT'L DRAWINGS)
33	CONCRETE-FILLED STEEL PIPE BOLLARD
34	DECORATIVE METAL
35	UPTURNED CAST-IN-PLACE CONCRETE SPANDREL BEAM
36	STAIR COLUMN
37	PEDESTRIAN GATE WITH PANIC HARDWARE (PAINTED)
38	METAL SLIDING TRASH ENCLOSURE GATE (PAINTED)
39	CONCRETE-FILLED METAL DECK
40	METAL HANDRAIL (PAINTED)
41	CONCRETE STAIRS OVER FOAM (REF. STRUCT'L DRAWINGS)

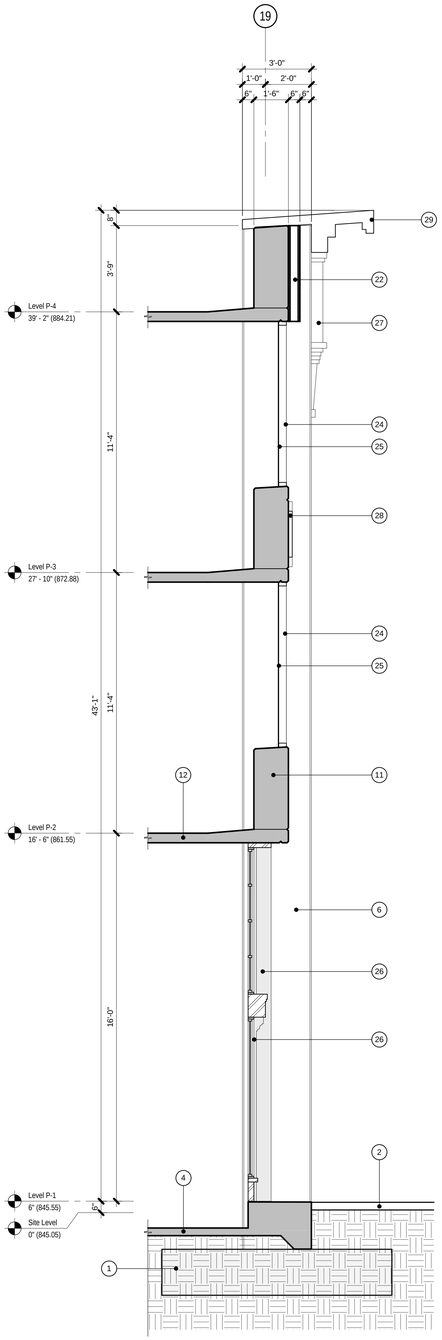

20 PA-6.5 — 20 - WALL SECTION at LINE 19/A.4
3/8" = 1'-0"

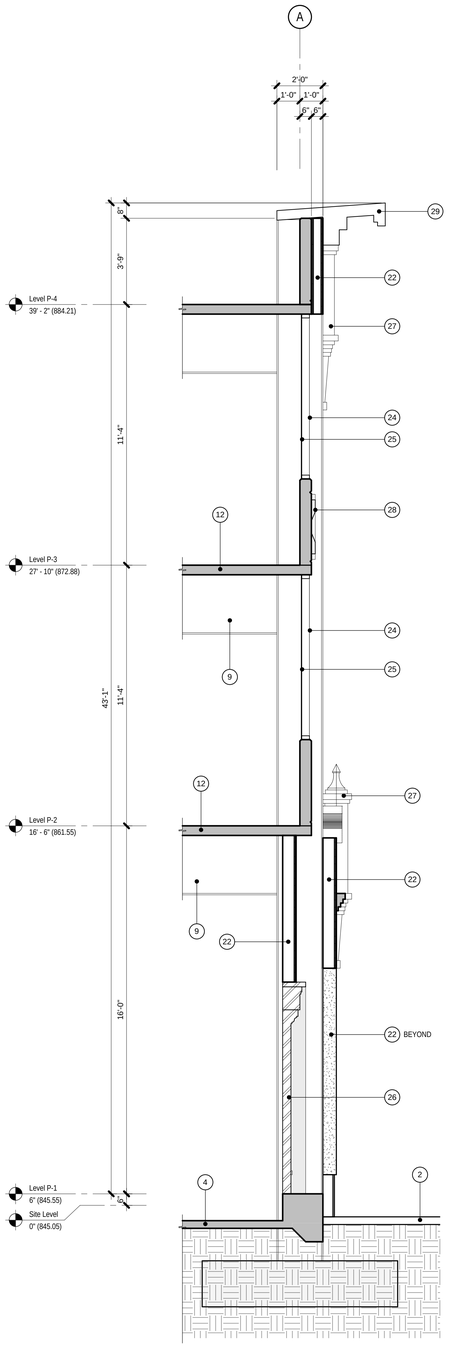

19 PA-6.5 — 19 - WALL SECTION at LINE A/17
3/8" = 1'-0"

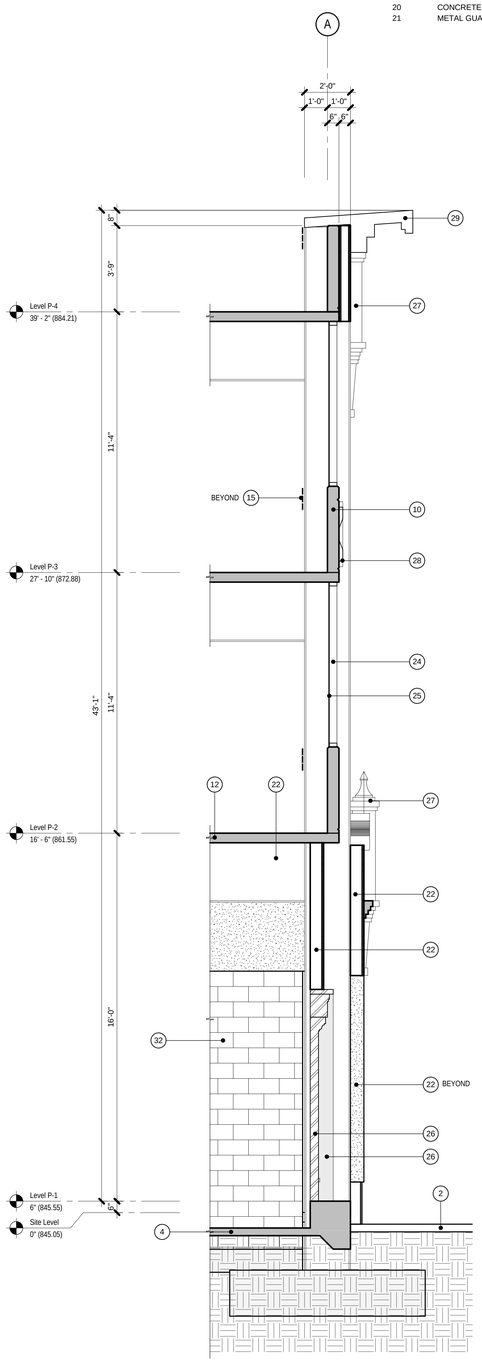

18 PA-6.5 — 18 - WALL SECTION at LINE A/16
3/8" = 1'-0"

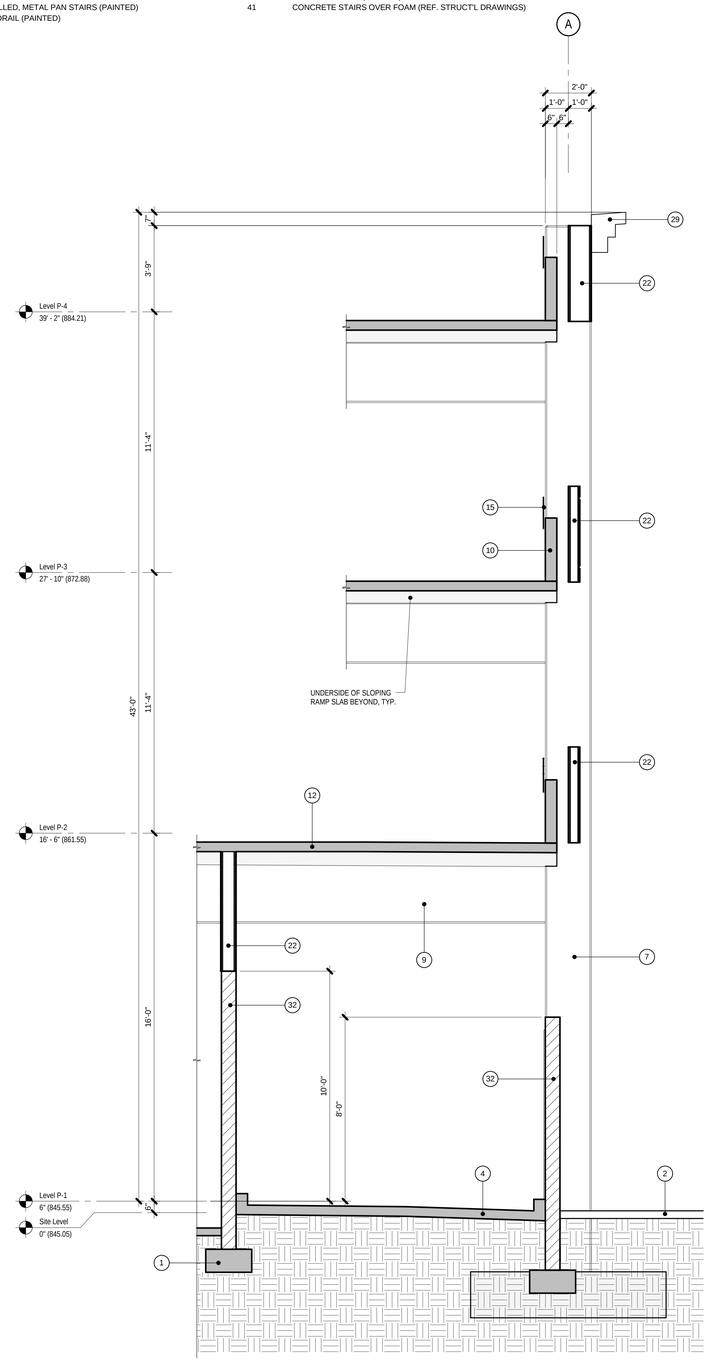

17 PA-6.5 — 17 - WALL SECTION at LINE A/15
3/8" = 1'-0"

Bayley Construction
3730 S. Susan St.
Suite 200
Santa Ana, CA. 92704
CA. License 734880
Tel 714-540-8863
Fax 714-556-8863

Bayley Construction
8005 S.E. 28th St.
P.O. Box 9004
Mercer Island, WA. 98040
WA. License BAYLECO343C
Tel 206-621-8884
Fax 206-343-7728

BAYLEY CONSTRUCTION

Pacific Parking DESIGN

6 Venture, Suite 275 949.341.0066 t
Irvine, California 92618 949.341.0099 f

DLR Group WWCOT
Architecture Engineering Planning Interiors

4280 Latham Street, Suite H 951.682.0470 t
Riverside, California 92501 951.682.1801 f

LICENSED ARCHITECT
SCOTT BRAYTON BERMAN
C-22700
EXP. 9-30-13
STATE OF CALIFORNIA

Public Agency Submittal:
Issued for Bidding:
Issued for Construction:

Revisions:

A 09.15.2011 PERMIT SET

PHASE II: FOX ENTERTAINMENT PLAZA: PARKING GARAGE

3601 Market Street
Riverside, CA 92501

CITY of RIVERSIDE

CITY OF RIVERSIDE

3900 Main Street, Riverside, CA 92522

Phase:
Revised 04.19.2011
PPD Project № 10-101

WALL SECTIONS

Issued Date: 05.02.2011
Drawn By: RTR
Checked By: SBH

PA-6.5
Sheet №

File Path & Name: C:\Dimension Z\PPD\Projects\2009 - Fox Plaza Parking Structure (Bayley)\Fox PPD Revit\PPD Fox Theater Parking Garage_Owner.rvt
© WWCOT 2009 – Plotted 9/13/2011 10:53:29 AM

MARK	KEYNOTE DESCRIPTION
1	CONCRETE FOOTING (REF. STRUCT'L. DRAWINGS)
2	GRADE/FINISHED EXTERIOR SURFACE (REF. CIVIL DRAWINGS)
3	CMU RETAINING WALL (REF. STRUCT'L DRAWINGS)
4	CONCRETE FLOOR SLAB ON GRADE
5	CONCRETE RAMP SLAB ON GRADE
6	CAST-IN-PLACE CONCRETE MOMENT FRAME COLUMN
7	CAST-IN-PLACE CONCRETE GRAVITY COLUMN
8	CAST-IN-PLACE CONCRETE GIRDER
9	CAST-IN-PLACE CONCRETE BEAM
10	CAST-IN-PLACE CONCRETE SPANDREL
11	CAST-IN-PLACE CONCRETE MOMENT FRAME BEAM
12	ELEVATED CONCRETE FLOOR SLAB
13	ELEVATED CONCRETE RAMP SLAB
14	CMU HOISTWAY
15	GALVANIZED BARRIER CABLES
16	BARRIER BEAM ASSEMBLY (REF. A-10 SHEETS)
17	SIGNAGE (REF. A-10 SHEETS)
19	REVEAL
20	CONCRETE FILLED, METAL PAN STAIRS (PAINTED)
21	METAL GUARDRAIL (PAINTED)

MARK	KEYNOTE DESCRIPTION
22	METAL STUD & PLASTER WALL
24	METAL FRAMED FACADE
25	METAL SCREENED FACADE
26	STOREFRONT FRAMING with GLAZING (MATCH EXISTING THEATRE)
27	DECORATIVE LANTERN - FOAM (MATCH EXISTING THEATRE)
28	MEDALLION - FOAM (MATCH EXISTING THEATRE)
29	METAL STUD and EIFS CORNICE
30	METAL DOOR (PAINTED)
31	ADJACENT STRUCTURE
32	CMU WALL (REF. STRUCT'L DRAWINGS)
33	CONCRETE-FILLED STEEL PIPE BOLLARD
34	DECORATIVE METAL
35	UPTURNED CAST-IN-PLACE CONCRETE SPANDREL BEAM
36	STAIR COLUMN
37	PEDESTRIAN GATE WITH PANIC HARDWARE (PAINTED)
38	METAL SLIDING TRASH ENCLOSURE GATE (PAINTED)
39	CONCRETE-FILLED METAL DECK
40	METAL HANDRAIL (PAINTED)
41	CONCRETE STAIRS OVER FOAM (REF. STRUCT'L DRAWINGS)

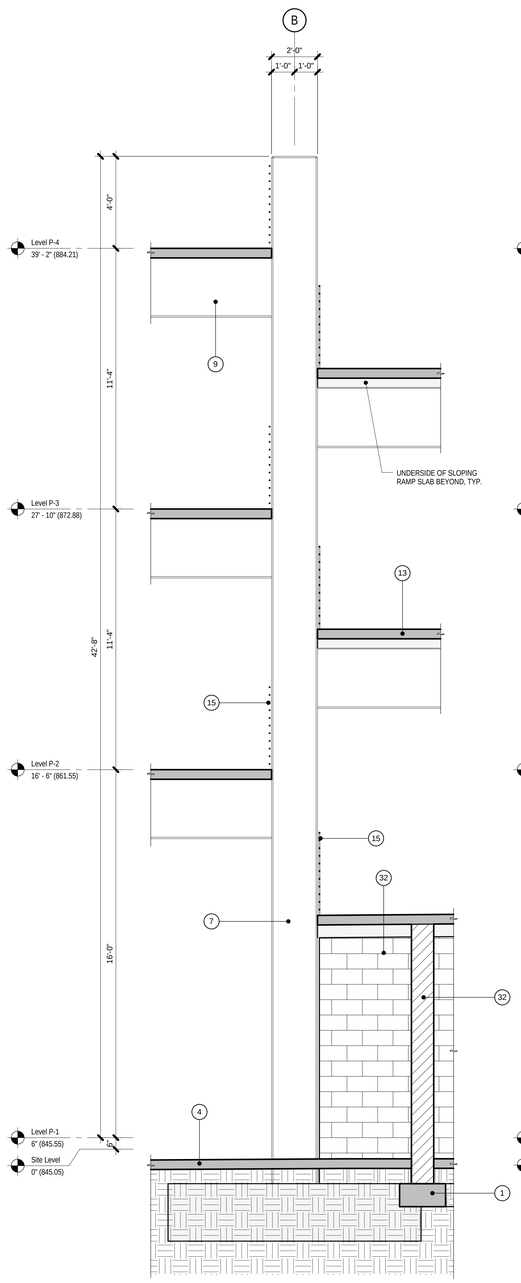

24 PA-6.6 — 24 - WALL SECTION at LINE B/10
3/8" = 1'-0"

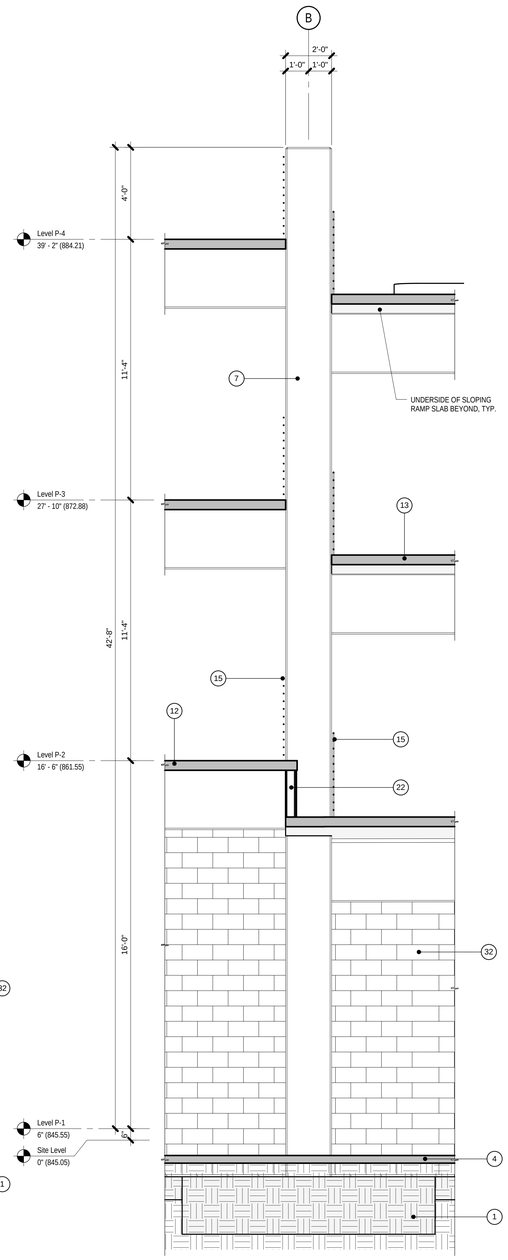

23 PA-6.6 — 23 - WALL SECTION at LINE B/13
3/8" = 1'-0"

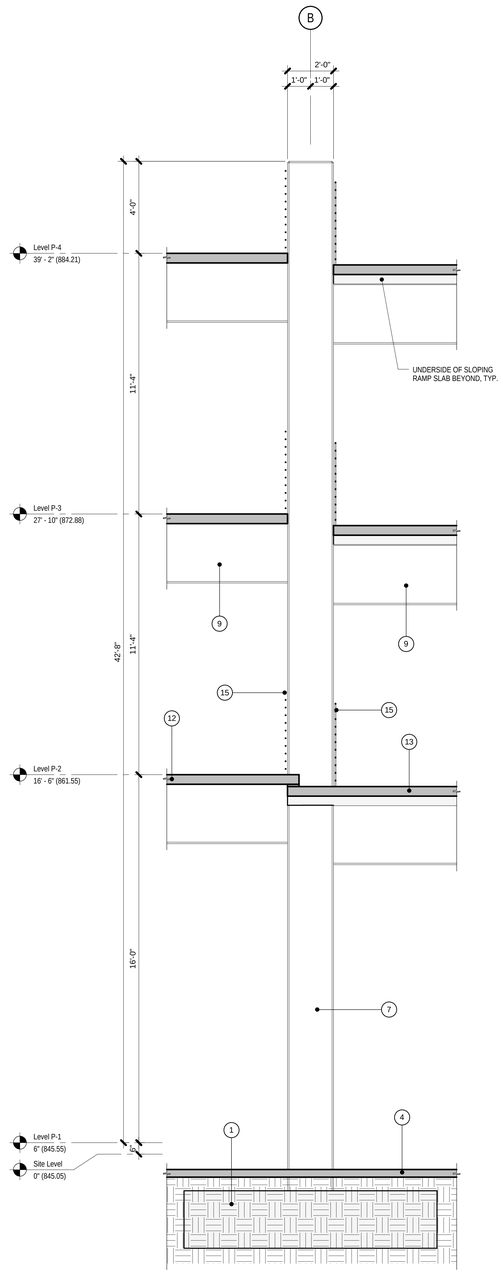

22 PA-6.6 — 22 - WALL SECTION at LINE B/15
3/8" = 1'-0"

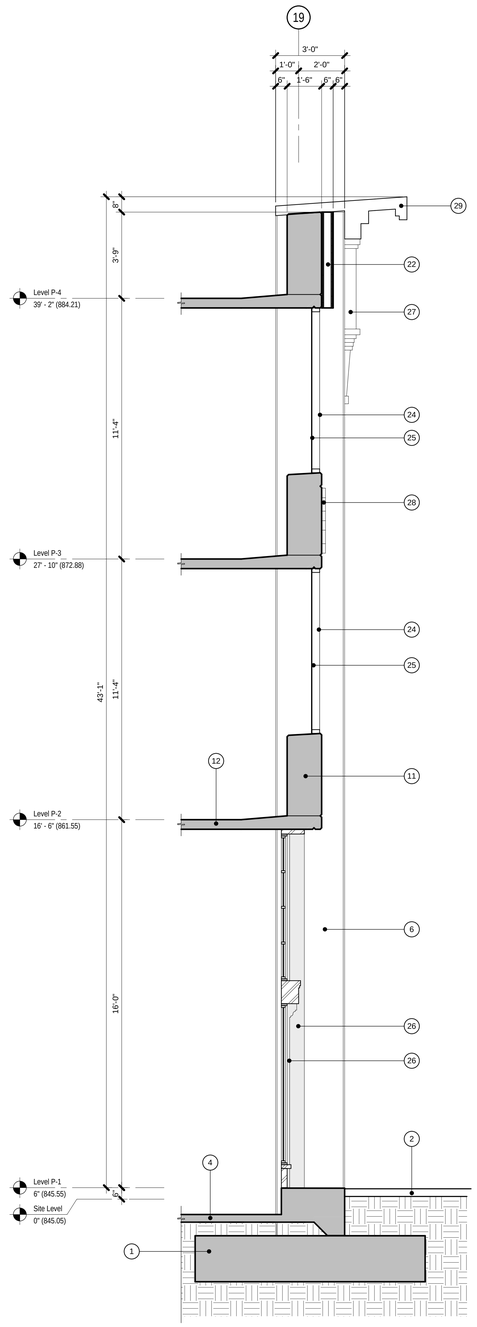

21 PA-6.6 — 21 - WALL SECTION at LINE 19/B
3/8" = 1'-0"

Bayley Construction
3730 S. Susan St.
Suite 200
Santa Ana, CA. 92704
CA. License 734880
Tel 714-540-8863
Fax 714-556-8863

Bayley Construction
8005 S.E. 28th St.
P.O. Box 9004
Mercer Island, WA. 98040
WA. License BAYLECO343C
Tel 206-621-8884
Fax 206-343-7728

BAYLEY CONSTRUCTION

Pacific Parking DESIGN
6 Venture, Suite 275 949.341.0066 t
Irvine, California 92618 949.341.0099 f

DLR Group WWCOT
Architecture Engineering Planning Interiors
4280 Latham Street, Suite H 951.682.0470 t
Riverside, California 92501 951.682.1801 f

LICENSED ARCHITECT
SCOTT BRAYTON BERMAN
C-22700
EXP. 9-30-13
STATE OF CALIFORNIA

Public Agency Submittal:
Issued for Bidding:
Issued for Construction:

Revisions:

A 09.15.2011 PERMIT SET

PHASE II: FOX ENTERTAINMENT PLAZA: PARKING GARAGE

3601 Market Street
Riverside, CA 92501

CITY of RIVERSIDE

CITY OF RIVERSIDE

3900 Main Street, Riverside, CA 92522

Phase:
Revised 04.19.2011
PPD Project № 10-101

WALL SECTIONS

Issued Date: 05.02.2011
Drawn By: RTR
Checked By: SBH

PA-6.6
Sheet №

File Path & Name: C:\Dimension Z\PPD\Projects\2009 - Fox Plaza Parking Structure (Bayley)\Fox PPD Revit\PPD Fox Theater Parking Garage_Owner.rvt
© WWCOT 2009 - Plotted 9/13/2011 10:53:54 AM

MARK	KEYNOTE DESCRIPTION
1	CONCRETE FOOTING (REF. STRUCT'L. DRAWINGS)
2	GRADE/FINISHED EXTERIOR SURFACE (REF. CIVIL DRAWINGS)
3	CMU RETAINING WALL (REF. STRUCT'L DRAWINGS)
4	CONCRETE FLOOR SLAB ON GRADE
5	CONCRETE RAMP SLAB ON GRADE
6	CAST-IN-PLACE CONCRETE MOMENT FRAME COLUMN
7	CAST-IN-PLACE CONCRETE GRAVITY COLUMN
8	CAST-IN-PLACE CONCRETE GIRDER
9	CAST-IN-PLACE CONCRETE BEAM
10	CAST-IN-PLACE CONCRETE SPANDREL
11	CAST-IN-PLACE CONCRETE MOMENT FRAME BEAM
12	ELEVATED CONCRETE FLOOR SLAB
13	ELEVATED CONCRETE RAMP SLAB
14	CMU HOISTWAY
15	GALVANIZED BARRIER CABLES
16	BARRIER BEAM ASSEMBLY (REF. A-10 SHEETS)
17	SIGNAGE (REF. A-10 SHEETS)
19	REVEAL
20	CONCRETE FILLED, METAL PAN STAIRS (PAINTED)
21	METAL GUARDRAIL (PAINTED)

MARK	KEYNOTE DESCRIPTION
22	METAL STUD & PLASTER WALL
24	METAL FRAMED FACADE
25	METAL SCREENED FACADE
26	STOREFRONT FRAMING with GLAZING (MATCH EXISTING THEATRE)
27	DECORATIVE LANTERN - FOAM (MATCH EXISTING THEATRE)
28	MEDALLION - FOAM (MATCH EXISTING THEATRE)
29	METAL STUD and EIFS CORNICE
30	METAL DOOR (PAINTED)
31	ADJACENT STRUCTURE
32	CMU WALL (REF. STRUCT'L DRAWINGS)
33	CONCRETE-FILLED STEEL PIPE BOLLARD
34	DECORATIVE METAL
35	UPTURNED CAST-IN-PLACE CONCRETE SPANDREL BEAM
36	STAIR COLUMN
37	PEDESTRIAN GATE WITH PANIC HARDWARE (PAINTED)
38	METAL SLIDING TRASH ENCLOSURE GATE (PAINTED)
39	CONCRETE-FILLED METAL DECK
40	METAL HANDRAIL (PAINTED)
41	CONCRETE STAIRS OVER FOAM (REF. STRUCT'L DRAWINGS)

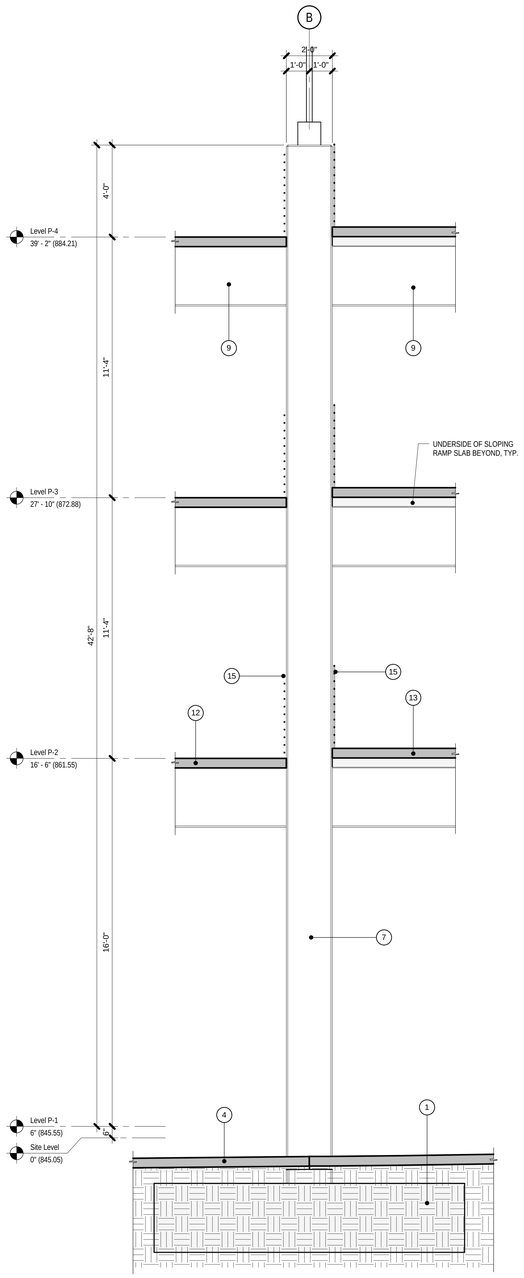

28 — 28 - WALL SECTION at LINE B/4
PA-6.7 — 3/8" = 1'-0"

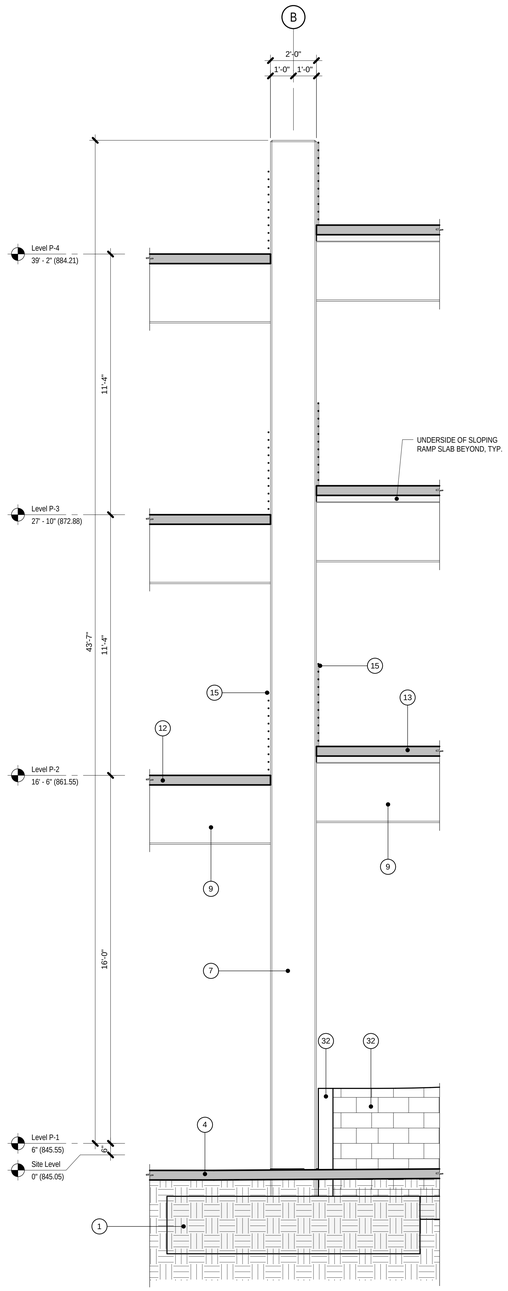

27 — 27 - WALL SECTION at LINE B/5
PA-6.7 — 3/8" = 1'-0"

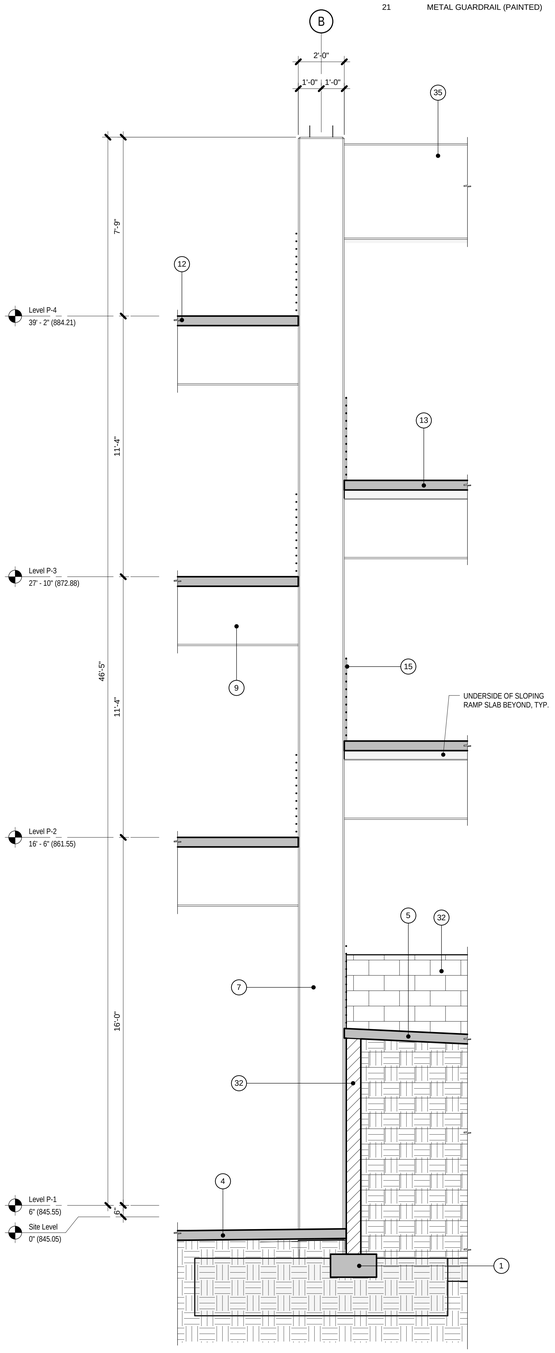

26 — 26 - WALL SECTION at LINE B/8
PA-6.7 — 3/8" = 1'-0"

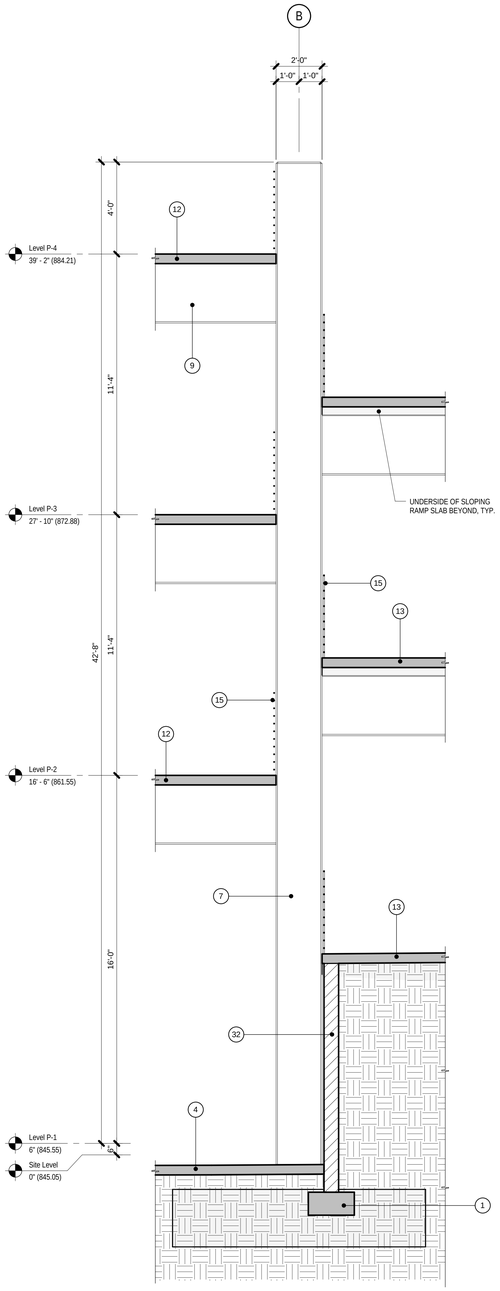

25 — 25 - WALL SECTION at LINE B/9
PA-6.7 — 3/8" = 1'-0"

Bayley Construction
3730 S. Susan St.
Suite 200
Santa Ana, CA. 92704
CA. License 734880
Tel 714-540-8863
Fax 714-556-8863

Bayley Construction
8005 S.E. 28th St.
P.O. Box 9004
Mercer Island, WA. 98040
WA. License BAYLECO343C
Tel 206-621-8884
Fax 206-343-7728

Pacific Parking DESIGN
6 Venture, Suite 275 949.341.0066 t
Irvine, California 92618 949.341.0099 f

DLR Group WWCOT
Architecture Engineering Planning Interiors
4280 Latham Street, Suite H 951.682.0470 t
Riverside, California 92501 951.682.1801 f

LICENSED ARCHITECT
SCOTT BRAYTON BERMAN
C-22700
EXP. 9-30-13
STATE OF CALIFORNIA

Public Agency Submittal:
Issued for Bidding:
Issued for Construction:

Revisions:

A 09.15.2011 PERMIT SET

PHASE II: FOX ENTERTAINMENT PLAZA: PARKING GARAGE

3601 Market Street
Riverside, CA 92501

CITY of RIVERSIDE

CITY OF RIVERSIDE

3900 Main Street, Riverside, CA 92522

Phase:
Revised 04.19.2011
PPD Project № 10-101

WALL SECTIONS

Issued Date: 05.02.2011
Drawn By: RTR
Checked By: SBH

PA-6.7

Sheet №

File Path & Name: C:\Dimension Z\PPD\Projects\2009 - Fox Plaza Parking Structure (Bayley)\Fox PPD Revit\PPD Fox Theater Parking Garage_Owner.rvt
© WWCOT 2009 - Plotted 9/13/2011 10:54:21 AM

MARK	KEYNOTE DESCRIPTION
1	CONCRETE FOOTING (REF. STRUCT'L. DRAWINGS)
2	GRADE/FINISHED EXTERIOR SURFACE (REF. CIVIL DRAWINGS)
3	CMU RETAINING WALL (REF. STRUCT'L DRAWINGS)
4	CONCRETE FLOOR SLAB ON GRADE
5	CONCRETE RAMP SLAB ON GRADE
6	CAST-IN-PLACE CONCRETE MOMENT FRAME COLUMN
7	CAST-IN-PLACE CONCRETE GRAVITY COLUMN
8	CAST-IN-PLACE CONCRETE GIRDER
9	CAST-IN-PLACE CONCRETE BEAM
10	CAST-IN-PLACE CONCRETE SPANDREL
11	CAST-IN-PLACE CONCRETE MOMENT FRAME BEAM
12	ELEVATED CONCRETE FLOOR SLAB
13	ELEVATED CONCRETE RAMP SLAB
14	CMU HOISTWAY
15	GALVANIZED BARRIER CABLES
16	BARRIER BEAM ASSEMBLY (REF. A-10 SHEETS)
17	SIGNAGE (REF. A-10 SHEETS)
19	REVEAL
20	CONCRETE FILLED, METAL PAN STAIRS (PAINTED)
21	METAL GUARDRAIL (PAINTED)

MARK	KEYNOTE DESCRIPTION
22	METAL STUD & PLASTER WALL
24	METAL FRAMED FACADE
25	METAL SCREENED FACADE
26	STOREFRONT FRAMING with GLAZING (MATCH EXISTING THEATRE)
27	DECORATIVE LANTERN - FOAM (MATCH EXISTING THEATRE)
28	MEDALLION - FOAM (MATCH EXISTING THEATRE)
29	METAL STUD and EIFS CORNICE
30	METAL DOOR (PAINTED)
31	ADJACENT STRUCTURE
32	CMU WALL (REF. STRUCT'L DRAWINGS)
33	CONCRETE-FILLED STEEL PIPE BOLLARD
34	DECORATIVE METAL
35	UPTURNED CAST-IN-PLACE CONCRETE SPANDREL BEAM
36	STAIR COLUMN
37	PEDESTRIAN GATE WITH PANIC HARDWARE (PAINTED)
38	METAL SLIDING TRASH ENCLOSURE GATE (PAINTED)
39	CONCRETE-FILLED METAL DECK
40	METAL HANDRAIL (PAINTED)
41	CONCRETE STAIRS OVER FOAM (REF. STRUCT'L DRAWINGS)

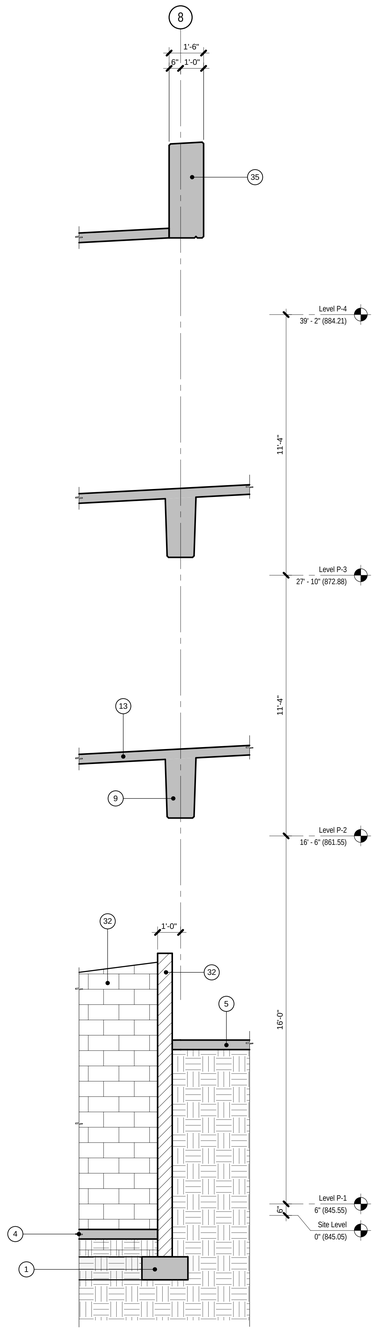

32 PA-6.8 — 32 - WALL SECTION at LINE 8
3/8" = 1'-0"

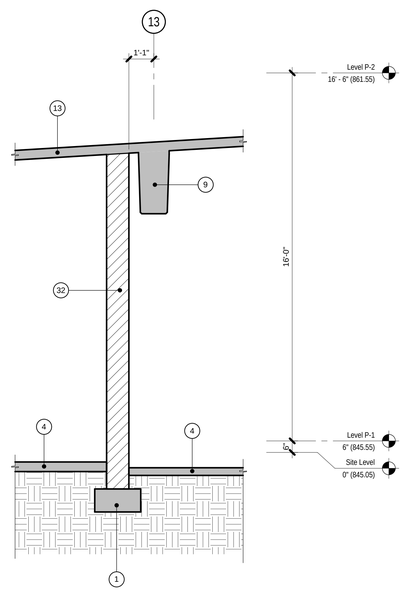

31 PA-6.8 — 31 - WALL SECTION at LINE 13
3/8" = 1'-0"

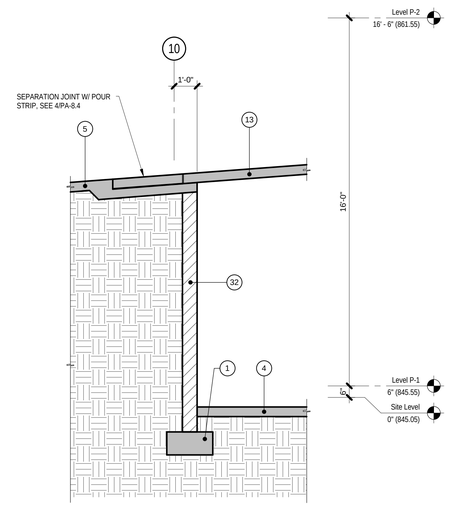

30 PA-6.8 — 30 - WALL SECTION at LINE 10
3/8" = 1'-0"

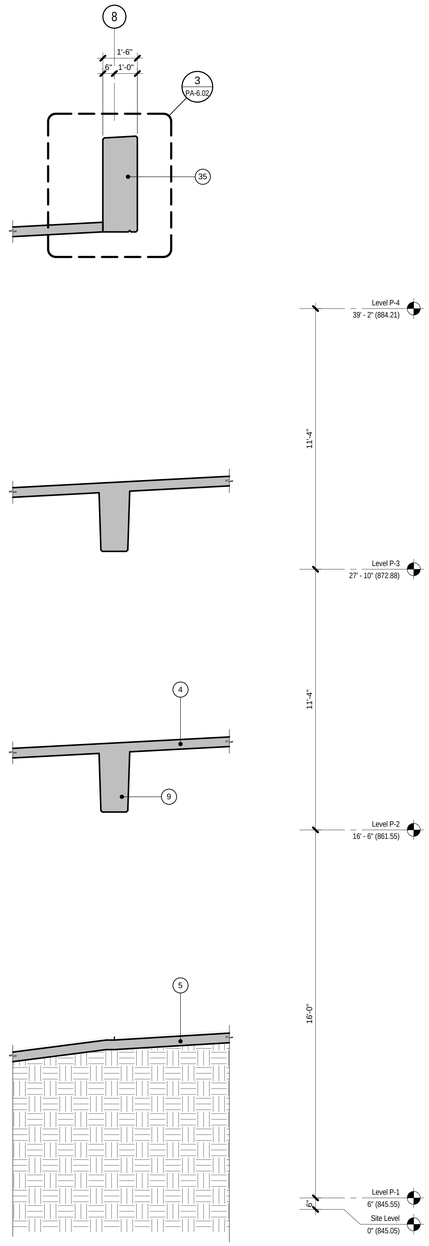

29 PA-6.8 — 29 - WALL SECTION at LINE 8
3/8" = 1'-0"

File Path & Name: C:\Dimension Z\PPD\Projects\2009 - Fox Plaza Parking Structure (Bayley)\Fox PPD Revit\PPD Fox Theater Parking Garage_Owner.rvt
© WWCOT 2009 - Plotted 9/13/2011 10:54:47 AM

Bayley Construction
3730 S. Susan St.
Suite 200
Santa Ana, CA. 92704
CA. License 734880
Tel 714-540-8863
Fax 714-556-8863

Bayley Construction
8005 S.E. 28th St.
P.O. Box 9004
Mercer Island, WA. 98040
WA. License BAYLECO343C
Tel 206-621-8884
Fax 206-343-7728

Pacific Parking DESIGN
6 Venture, Suite 275 949.341.0066 t
Irvine, California 92618 949.341.0099 f

DLR Group WWCOT
Architecture Engineering Planning Interiors
4280 Latham Street, Suite H 951.682.0470 t
Riverside, California 92501 951.682.1801 f

LICENSED ARCHITECT
SCOTT BRAYTON BERMAN
C-22700
EXP. 9-30-13
STATE OF CALIFORNIA

Public Agency Submittal:
Issued for Bidding:
Issued for Construction:

Revisions:

A 09.15.2011 PERMIT SET

PHASE II: FOX ENTERTAINMENT PLAZA: PARKING GARAGE

3601 Market Street
Riverside, CA 92501

CITY of RIVERSIDE

3900 Main Street, Riverside, CA 92522

Phase:
Revised 04.19.2011
PPD Project № 10-101

WALL SECTIONS

Issued Date: 05.02.2011
Drawn By: RTR
Checked By: SBH

PA-6.8
Sheet №

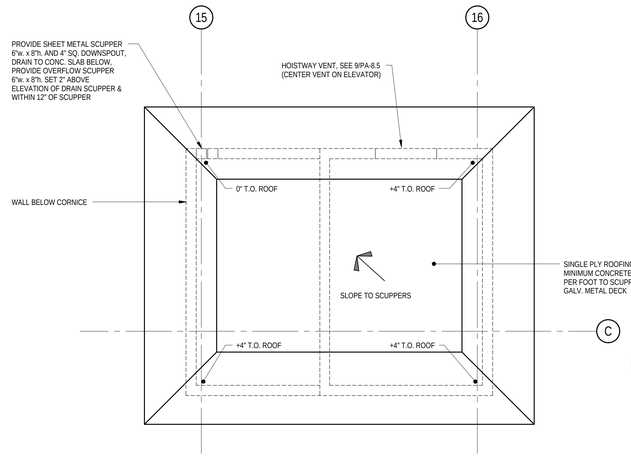

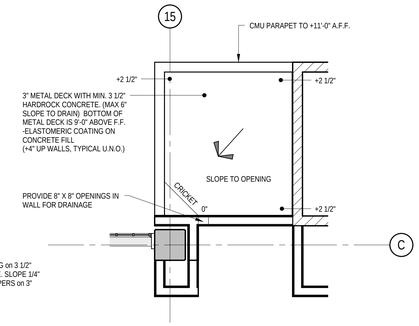

6 PA-7.1 ELEVATOR MACHINE ROOM ENLARGED ROOF PLAN

1/4" = 1'-0"

ELEVATORS TO COMPLY WITH C.B.C. CHAPTER 30, and AMERICAN NATIONAL STANDARD, SAFETY CODE FOR ELEVATORS & ESCALATORS (ASME A17.1)

ELEVATOR LOBBY AREA AND MACHINE ROOM SHALL BE PROVIDED WITH AN APPROVED, LISTED SMOKE DETECTOR FOR ELEVATOR RECALL ONLY. PER C.B.C SECTION 3003.2

ELEVATOR MACHINE ROOMS SHALL COMPLY WITH SECTION 3005.

ALL ELEVATOR CARS WILL MEET THE EMERGENCY GENERAL STRETCHER REQUIREMENTS OF CBC 3002.4A.

EXCEPT AT THE MAIN ENTRANCE LEVEL, AN APPROVED PICTORIAL SIGN OF A STANDARDIZED DESIGN SHALL BE POSTED ADJACENT TO EACH ELEVATOR CALL STATION TO INDICATE THAT, "IN CASE OF FIRE, ELEVATOR WILL NOT OPERATE AND THAT EXIT STAIRWAYS SHOULD BE USED"

POUR SLAB TO PROVIDE FOR POSITIVE DRAINAGE FROM ELEVATOR SILL SET SILL ELEVATION MINIMUM 1" ABOVE SLAB, SLOPE OUT AT MAXIMUM 1/4" PER FOOT

DESIGN-BUILD STAIRS

THESE DRAWINGS DESCRIBE THE FINISHED CONFIGURATION AND DESIGN REQUIREMENTS OF THE STAIRS. THE STAIRS ARE TO BE A DESIGN-BUILD FURNISHED ITEM FOR THE PROJECT. ALL MEANS AND METHODS OF CONSTRUCTION ARE THE RESPONSIBILITY OF THE SUB-CONTRACTOR. SHOP DRAWINGS AND DESIGN CALCULATIONS FOR THE STEEL STAIRS SHALL BE SUBMITTED FOR APPROVAL PRIOR TO FABRICATION AND ERECTION.

THE SUB-CONTRACTOR PACKAGE SHALL BE STAMPED AND SIGNED BY AN ENGINEER LICENSED IN THE STATE OF CALIFORNIA. THE STAIR SUB-CONTRACTOR IS RESPONSIBLE FOR THEIR OWN PARTICULAR DESIGN ITEMS, INCLUDING ATTACHMENTS TO THE STRUCTURE & FOUNDATION DESIGN.

PACIFIC PARKING DESIGN WILL REVIEW THE DESIGN-BUILD PACKAGE FOR GENERAL CONFORMANCE TO THE OVERALL DESIGN CRITERIA ONLY.

PG-1 INDICATES DOOR TYPE, REF. A-8.5 FOR DOOR SCHEDULE & DOOR DETAILS

PROVIDE STAIR WARNING STRIPING AT TOP AND BOTTOM STAIR TREADS, REF. 5/A-8.1. 2" MIN. (4" MAX.) ABRASIVE STRIP CONTRASTING IN COLOR w/ ADJOINING SURFACES, (AS SLIP-RESISTANT AS STAIR SURFACE) PLACE NOT MORE THAN 1" FROM NOSING.

PROVIDE STAIRWAY IDENTIFICATION AS PER C.B.C. 1103.2.4.2, WITH RAISED ARABIC NUMERALS AND RAISED BRAILLE SYMBOLS. THE SIGNS SHALL BE LOCATED 5 FEET ABOVE THE FINISHED FLOOR AND IMMEDIATELY NEXT TO THE STAIR AT EACH LEVEL.

STAIRS ARE DESIGN-BUILD ITEM FOR PROJECT AND SHALL BE STEEL FRAMED WITH CHECKERPLATE TREADS AND LANDINGS. SEE PA-8.1 & PA-8.2 FOR TYPICAL HANDRAILS/GUARDRAILS.

STAIRS, HANDRAILS & GUARDRAILS ARE TO BE PAINTED, TYPICAL

5 PA-7.1 ENLARGED ELEVATOR ROOF PLAN

1/4" = 1'-0"

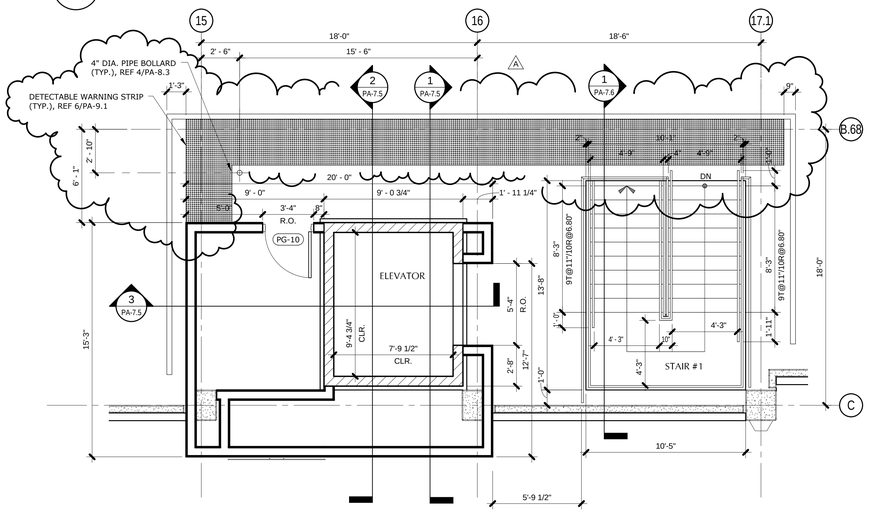

4 PA-7.1 ELEVATOR & STAIR #1 ENLARGED PLAN - LEVEL P-4

1/4" = 1'-0"

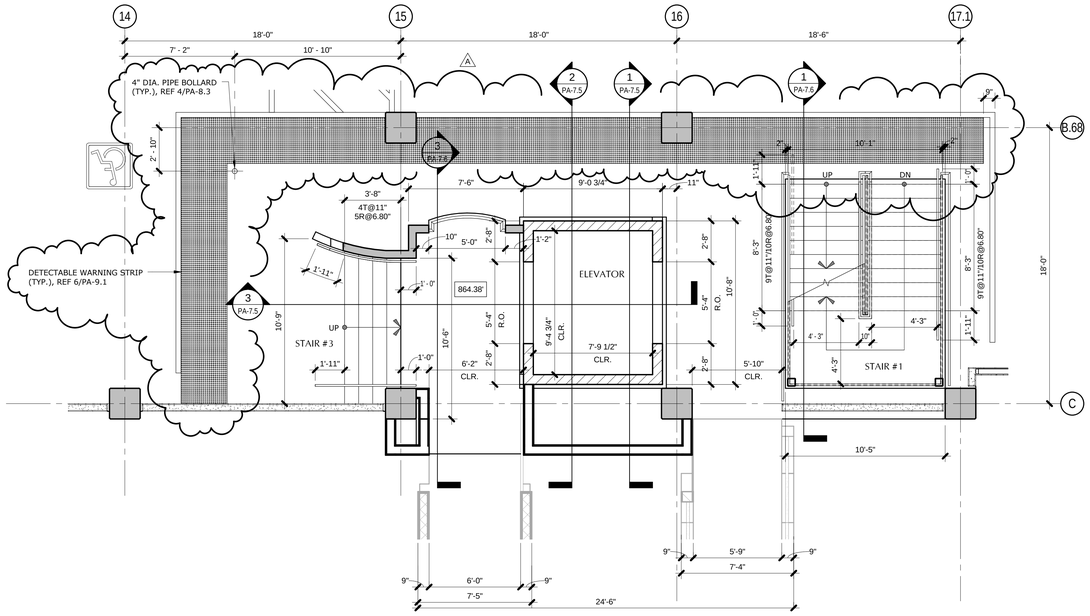

2 PA-7.1 ELEVATOR & STAIR #1 ENLARGED PLAN - LEVEL P-2

1/4" = 1'-0"

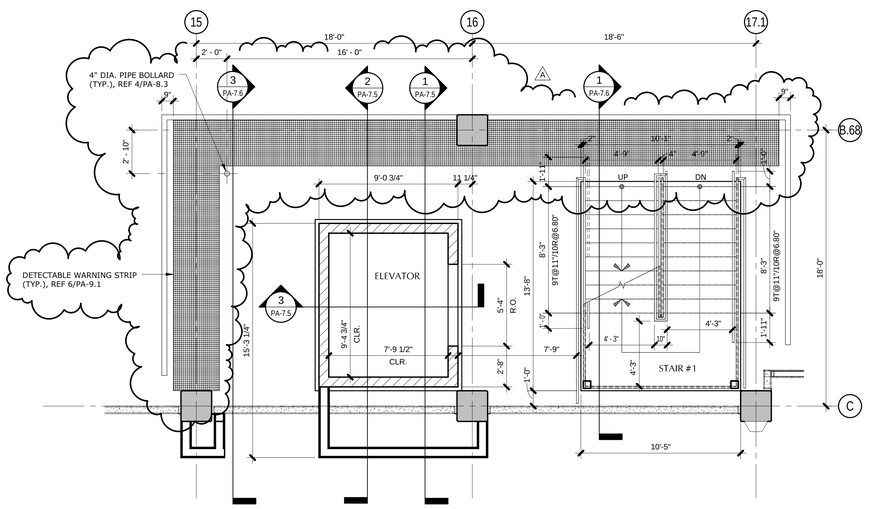

3 PA-7.1 ELEVATOR & STAIR #1 ENLARGED PLAN - LEVEL P-3

1/4" = 1'-0"

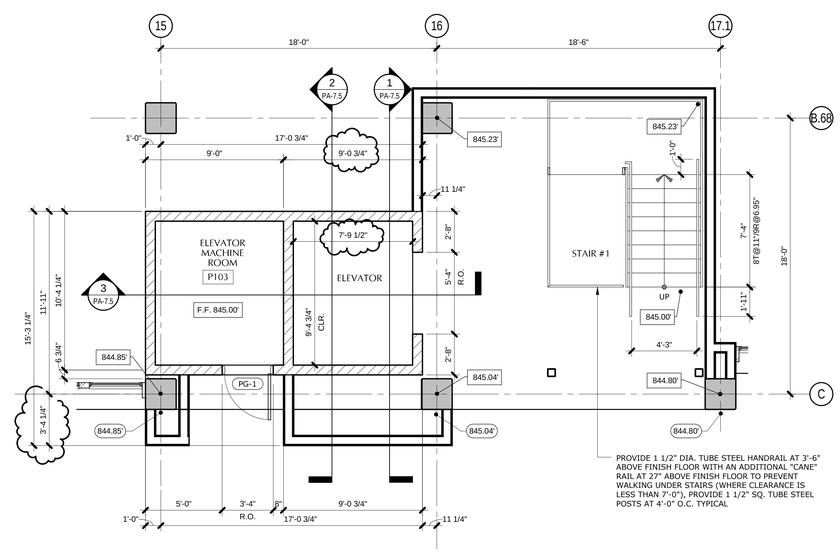

PROJECT NORTH

1 PA-7.1 ELEVATOR & ELEVATOR MACHINE ROOM ENLARGED PLAN - LEVEL P-1

1/4" = 1'-0"

Bayley Construction
3730 S. Susan St.
Suite 200
Santa Ana, CA. 92704
CA. License 734880
Tel 714-540-8863
Fax 714-556-8863

Bayley Construction
8005 S.E. 28th St.
P.O. Box 9004
Mercer Island, WA. 98040
WA. License BAYLECO343JC
Tel 206-621-8884
Fax 206-343-7728

Pacific Parking DESIGN
6 Venture, Suite 275 949.341.0066 t
Irvine, California 92618 949.341.0099 f

DLR Group WWCOT
Architecture Engineering Planning Interiors
4280 Latham Street, Suite H 951.682.0470 t
Riverside, California 92501 951.682.1801 f

LICENSED ARCHITECT SCOTT BRAYTON BERMAN C-22700 EXP. 9-30-13 STATE OF CALIFORNIA

Public Agency Submittal:
Issued for Bidding:
Issued for Construction:

Revisions:

A 09.15.2011 PERMIT SET

PHASE II: FOX ENTERTAINMENT PLAZA: PARKING GARAGE

3601 Market Street
Riverside, CA 92501

CITY of RIVERSIDE

3900 Main Street, Riverside, CA 92522

Phase:
Revised 04.19.2011
PPD Project № 10-101

ELEVATOR & STAIR NO.1 - ENLARGED PLANS

Issued Date: 05.02.2011
Drawn By: RTR
Checked By: SBH

PA-7.1

Sheet №

File Path & Name: C:\Dimension Z\PPD\Projects\2009 - Fox Plaza Parking Structure (Bayley)\Fox PPD Revit\PPD Fox Theater Parking Garage_Owner.rvt
© WWCOT 2009 – Plotted 9/13/2011 10:55:26 AM

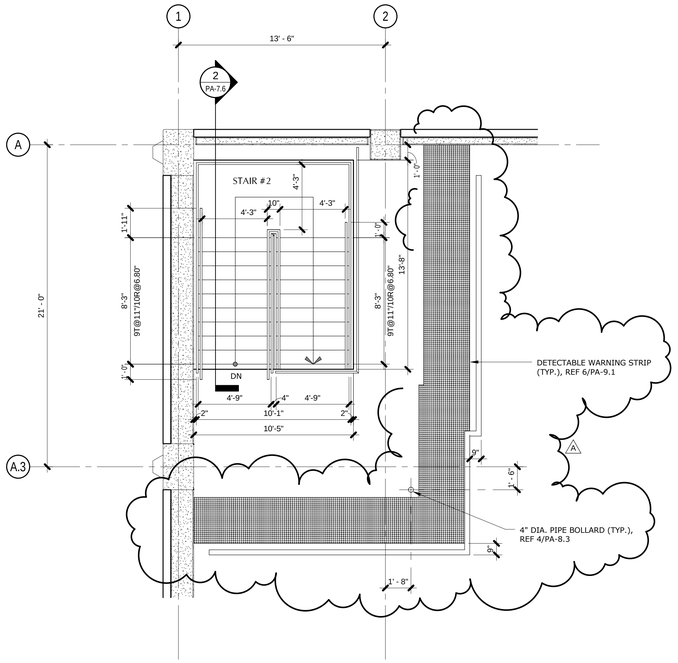

4 PA-7.2 STAIR #2 ENLARGED PLAN - LEVEL P-4

1/4" = 1'-0"

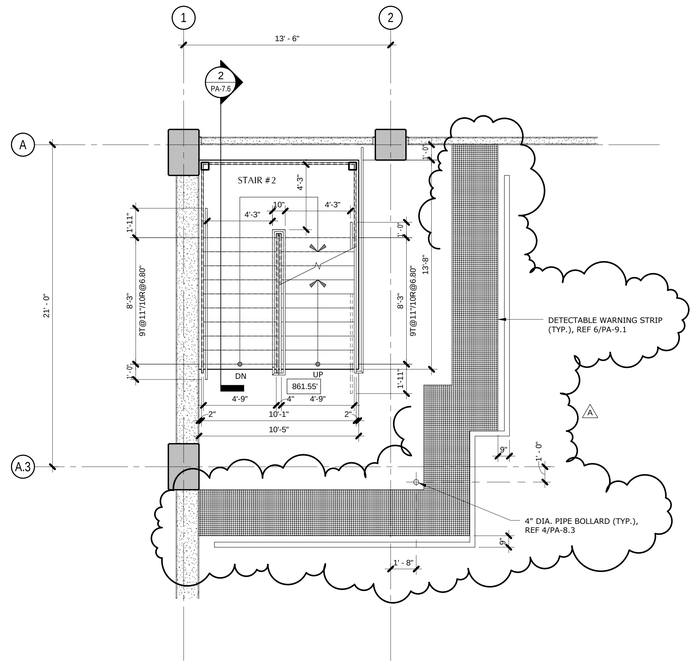

2 PA-7.2 STAIR #2 ENLARGED PLAN - LEVEL P-2

1/4" = 1'-0"

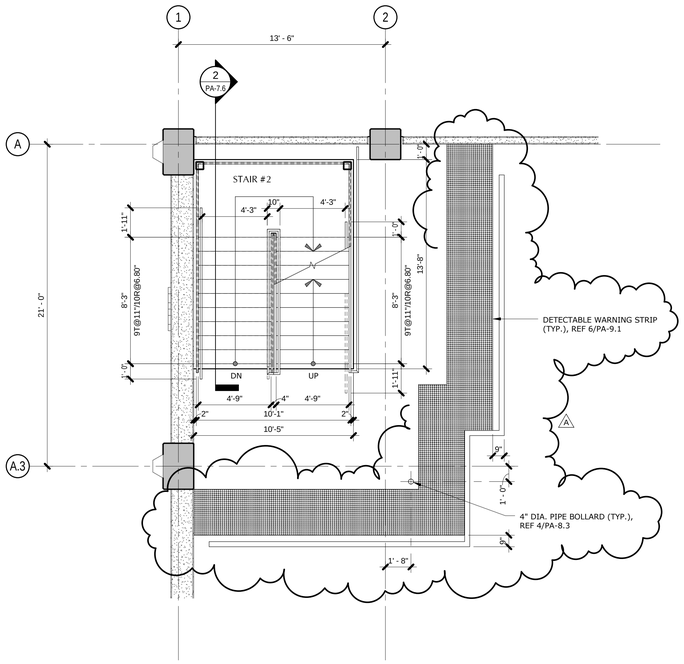

3 PA-7.2 STAIR #2 ENLARGED PLAN - LEVEL P-3

1/4" = 1'-0"

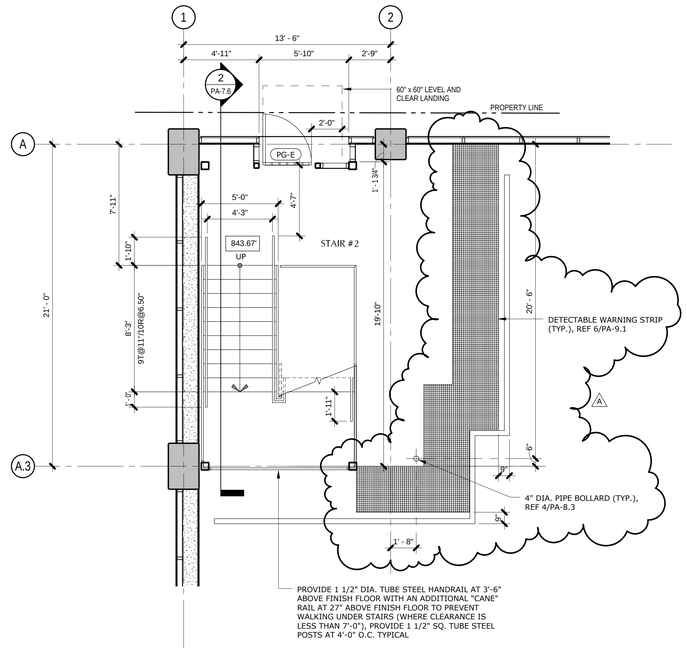

1 PA-7.2 STAIR #2 ENLARGED PLAN - LEVEL P-1

1/4" = 1'-0"

DESIGN-BUILD STAIRS

THESE DRAWINGS DESCRIBE THE FINISHED CONFIGURATION AND DESIGN REQUIREMENTS OF THE STAIRS. THE STAIRS ARE TO BE A DESIGN-BUILD FURNISHED ITEM FOR THE PROJECT. ALL MEANS AND METHODS OF CONSTRUCTION ARE THE RESPONSIBILITY OF THE SUB-CONTRACTOR. SHOP DRAWINGS AND DESIGN CALCULATIONS FOR THE STEEL STAIRS SHALL BE SUBMITTED FOR APPROVAL PRIOR TO FABRICATION AND ERECTION.

THE SUB-CONTRACTOR PACKAGE SHALL BE STAMPED AND SIGNED BY AN ENGINEER LICENSED IN THE STATE OF CALIFORNIA. THE STAIR SUB-CONTRACTOR IS RESPONSIBLE FOR THEIR OWN PARTICULAR DESIGN ITEMS, INCLUDING ATTACHMENTS TO THE STRUCTURE & FOUNDATION DESIGN.

PACIFIC PARKING DESIGN WILL REVIEW THE DESIGN-BUILD PACKAGE FOR GENERAL CONFORMANCE TO THE OVERALL DESIGN CRITERIA ONLY.

PG-1 INDICATES DOOR TYPE, REF. PA-8.6 FOR DOOR SCHEDULE & DOOR DETAILS

PROVIDE STAIR WARNING STRIPING AT TOP AND BOTTOM STAIR TREADS, REF. 5/PA-8.1. 2" MIN. (4" MAX.) ABRASIVE STRIP CONTRASTING IN COLOR w/ ADJOINING SURFACES, (AS SLIP-RESISTANT AS STAIR SURFACE) PLACE NOT MORE THAN 1" FROM NOSING.

PROVIDE STAIRWAY IDENTIFICATION AS PER C.B.C. 1103.2.4.2, WITH RAISED ARABIC NUMERALS AND RAISED BRAILLE SYMBOLS. THE SIGNS SHALL BE LOCATED 5 FEET ABOVE THE FINISHED FLOOR AND IMMEDIATELY NEXT TO THE STAIR AT EACH LEVEL.

STAIRS ARE DESIGN-BUILD ITEM FOR PROJECT AND SHALL BE STEEL FRAMED WITH CHECKERPLATE TREADS AND LANDINGS. SEE PA-8.1 & PA-8.2 FOR TYPICAL HANDRAILS/GUARDRAILS.

STAIRS, HANDRAILS & GUARDRAILS ARE TO BE PAINTED, TYPICAL

PG-A INDICATES GATE TYPE, REF. PA-8.7 FOR GATE SCHEDULE & GATE DETAILS

PROJECT NORTH

Bayley Construction
3730 S. Susan St.
Suite 200
Santa Ana, CA. 92704
CA. License 734880
Tel 714-540-8863
Fax 714-556-8863

Bayley Construction
8005 S.E. 28th St.
P.O. Box 9004
Mercer Island, WA. 98040
WA. License BAYLEC0341C
Tel 206-621-8884
Fax 206-343-7728

BAYLEY CONSTRUCTION

Pacific Parking DESIGN

6 Venture, Suite 275 949.341.0066 t
Irvine, California 92618 949.341.0099 f

DLR Group WWCOT
Architecture Engineering Planning Interiors

4280 Latham Street, Suite H 951.682.0470 t
Riverside, California 92501 951.682.1801 f

LICENSED ARCHITECT
SCOTT BRAYTON BERMAN
C-22700
EXP. 9-30-13
STATE OF CALIFORNIA

Public Agency Submittal:
Issued for Bidding:
Issued for Construction:

Revisions:

A 09.15.2011 PERMIT SET

PHASE II: FOX ENTERTAINMENT PLAZA: PARKING GARAGE

3601 Market Street
Riverside, CA 92501

CITY of RIVERSIDE

CITY OF RIVERSIDE

3900 Main Street, Riverside, CA 92522

Phase:
Revised 04.19.2011
PPD Project № 10-101

STAIR NO.2 - ENLARGED PLANS

Issued Date: 05.02.2011
Drawn By: RTR
Checked By: SBH

PA-7.2
Sheet №

File Path & Name: C:\Dimension Z\PPD Projects\2009 - Fox Plaza Parking Structure (Bayley)\Fox PPD Revit\PPD Fox Theater Parking Garage_Owner.rvt
© WWCOT 2009 – Plotted 9/13/2011 11:13:38 AM

ROOM FINISH SCHEDULE

RM #	NAME	FLOOR MATL	FLOOR FIN.	BASE MATL	BASE FIN.	WALL MATL	WALL FIN.	WALL MATL	WALL FIN.	CEILING MATL	CEILING FIN.	CEILING MATL	CEILING FIN.	NOTES
P101	RESTROOM	C	SL	CB	FG	CM	EL	-	-	EC	LF	-	-	MARBLE DOOR THRESHOLD
	RESTROOM (PLUMBING WALL)	-	-	-	-	MS	-	G3	EL	-	-	-	-	
P102	ELECTRICAL ROOM	C	SL	CB	FG	CM	EL	-	-	EC	-	-	-	
P103	ELEVATOR MACHINE ROOM	C	SL	-	-	CM	-	-	-	EC	-	-	-	
P104	TELEPHONE ROOM	C	SL	-	-	CM	-	-	-	EC	-	-	-	
P105	STORAGE	C	SL	-	-	CM	-	-	-	EC	-	-	-	
P106	UTILITY ROOM	C	SL	CB	FG	CM	EL	-	-	EC	-	-	-	

MATERIALS

AT	ACOUSTIC TILE - SUSPENDED CEILING
CP	CARPET
EC	EXPOSED CONSTRUCTION
VF	VINYL FLOORING
CF	2" X 2" CERAMIC TILE
CB	5" HIGH CERAMIC TILE SANITARY COVE BASE
VB	4" VINYL BASE
G1	1/2" GYPSUM WALL BOARD
G2	5/8" GYPSUM WALL BOARD - TYPE "X" FIRE RATED
G3	5/8" GYPSUM WALL BOARD - GREENBOARD (WITH TYPE "X" FIRE RATED CORE)
P1	3/4" GYPSUM PLASTER
P2	7/8" GYPSUM PLASTER
WT	2" X 2" CERAMIC TILE WAINSCOT - 4'-0" HIGH
C	CONCRETE
CM	CONCRETE MASONRY WALL
HM	HOLLOW METAL
MRP	MINERAL REINFORCED POLYETHYLENE WAINSCOT
MS	METAL STUD WALL W/ 1/2" CEMENT BOARD

FINISHES

EL	SEMI-GLOSS LATEX ENAMEL
FF	FACTORY FINISH
LF	LATEX FLAT
EE	LATEX EGGSHELL ENAMEL
EG	GLOSS LATEX ENAMEL
FG	FACTORY GLAZED
SR	SLIP-RESISTANT
SL	SEALED
UF	UNFINISHED
BR	BROOM FINISH
HT	HARD TROWEL
ST	STAINED FINISH
AD	ANODIZED ALUMINUM

RESTROOM ACCESSORY LEGEND

SYMBOL	DESCRIPTION	BOBRICK NO.
TA-01	18"x30" MIRROR w/ STAINLESS STEEL FRAME	B-165 1830
TA-02	SURFACE MOUNTED, STAINLESS STEEL PAPER TOWEL DISPENSER & WASTE	B-3699
TA-03	EXPOSED MOUNTING, 1-1/2" DIA., 42" LONG STAINLESS STEEL GRAB BAR	B-6806x42 (w/ CONCEALED ANCHOR PLATES)
TA-04	SURFACE MOUNTED, CAST ALUMINUM, LOCKING 2-ROLL TOILET TISSUE DISPENSER	B-27460
TA-05	EXPOSED MOUNTING, 1-1/2" DIA. 36" LONG STAINLESS STEEL GRAB BAR	B-6806x36 (w/ CONCEALED ANCHOR PLATES)
TA-06	SURFACE MOUNTED, STAINLESS STEEL TOILET SEAT COVER DISPENSER	B-221
TA-07	SURFACE MOUNTED, STAINLESS STEEL SOAP DISPENSER	B-2111
TA-08	CONCEALED MOUNTING WITH SNAP FLANGE, 1-1/2" DIA., TWO WALL STAINLESS STEEL SHOWER GRAB BAR 15 7/8" W x 30 7/8" D	B-6861
TA-09	SHOWER CURTAIN ROD with CONCEALED MOUNTING, 1" DIA., 36" LONG STAINLESS STEEL	B-207
TA-10	VINYL SHOWER CURTAIN and ASSOCIATED HOOKS	204-2 (w/ (7) - 204.1 SHOWER CURTAIN HOOKS)
TA-11	FOLDING SHOWER SEAT	B-5191

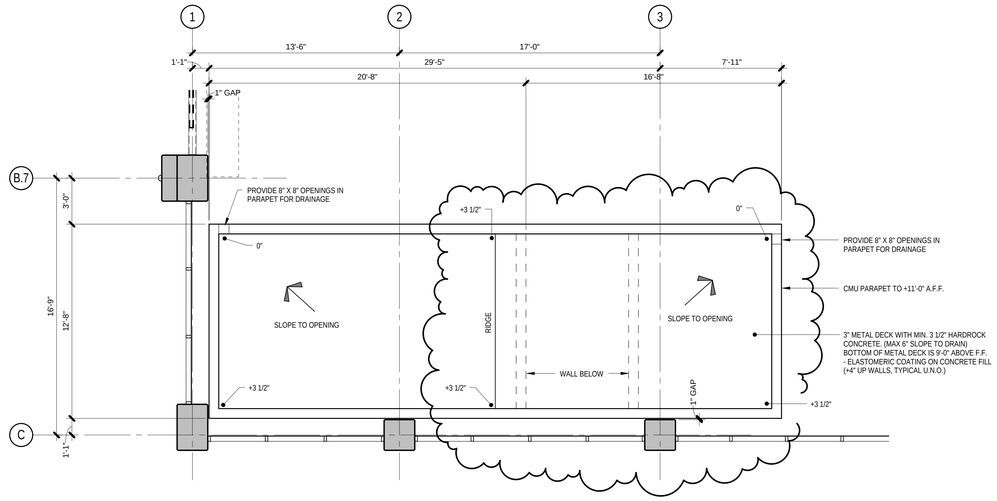

3 PA-7.3 ELECTRICAL ROOM and RESTROOM ENLARGED ROOF PLAN
1/4" = 1'-0"

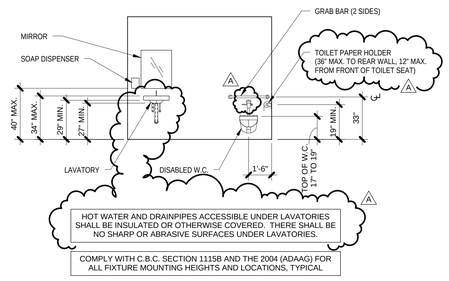

4 PA-7.3 RESTROOM FIXTURE ELEVATIONS
1/4" = 1'-0"

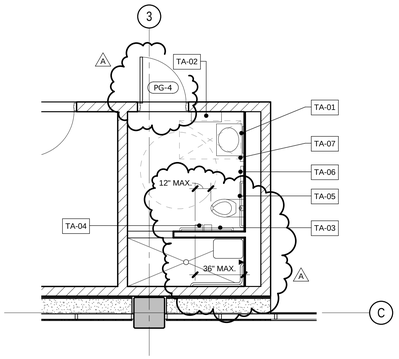

2 PA-7.3 RESTROOM ENLARGED FIXTURE PLAN
1/4" = 1'-0"

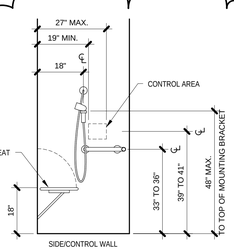

6 PA-7.3 ROLL-IN SHOWER ELEVATION
1/2" = 1'-0"

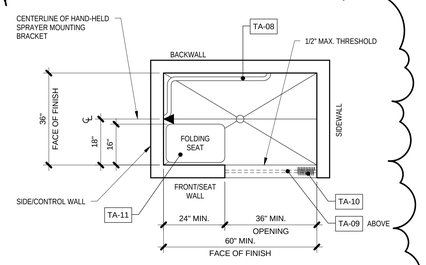

5 PA-7.3 ROLL-IN SHOWER PLAN
1/2" = 1'-0"

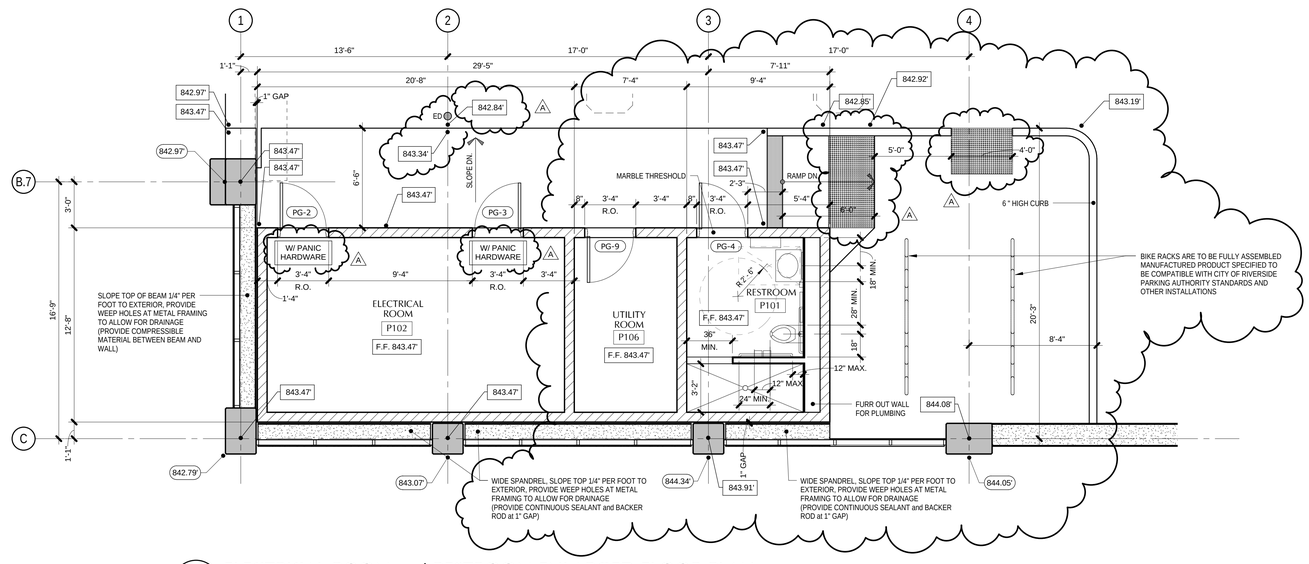

1 PA-7.3 ELECTRICAL ROOM and RESTROOM ENLARGED FLOOR PLAN
1/4" = 1'-0"

Bayley Construction
3730 S. Susan St.
Suite 200
Santa Ana, CA. 92704
CA. License 734880
Tel 714-540-8863
Fax 714-556-8863

Bayley Construction
8005 S.E. 28th St.
P.O. Box 9004
Mercer Island, WA. 98040
WA. License BAYLECO343C
Tel 206-621-8884
Fax 206-343-7728

BAYLEY CONSTRUCTION

Pacific Parking DESIGN
6 Venture, Suite 275 949.341.0066 t
Irvine, California 92618 949.341.0099 f

DLR Group WWCOT
Architecture Engineering Planning Interiors
4280 Latham Street, Suite H 951.682.0470 t
Riverside, California 92501 951.682.1801 f

LICENSED ARCHITECT SCOTT BRAYTON BERMAN C-22700 EXP. 9-30-13 STATE OF CALIFORNIA

Public Agency Submittal:
Issued for Bidding:
Issued for Construction:

Revisions:

A 09.15.2011 PERMIT SET

PHASE II:
FOX ENTERTAINMENT PLAZA:
PARKING GARAGE

3601 Market Street
Riverside, CA 92501

CITY of RIVERSIDE

CITY OF RIVERSIDE
3900 Main Street, Riverside, CA 92522

Phase:
Revised 04.19.2011
PPD Project № 10-101

ELECTRICAL ROOM and RESTROOM - ENLARGED PLANS

Issued Date: 05.02.2011
Drawn By: RTR
Checked By: SBH

PA-7.3
Sheet №

File Path & Name: C:\Dimension 7\PPD\Projects\2009 - Fox Plaza Parking Structure (Bayley)\Fox PPD Revit\PPD Fox Theater Parking Garage_Owner.rvt
© WWCOT 2009 -- Plotted: 9/13/2011 11:24:58 AM

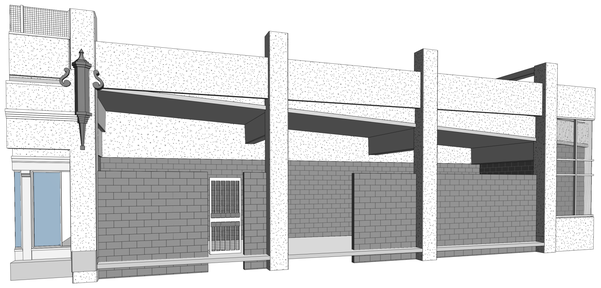

2A SERVICE AREA PERSPECTIVE
PA-7.4

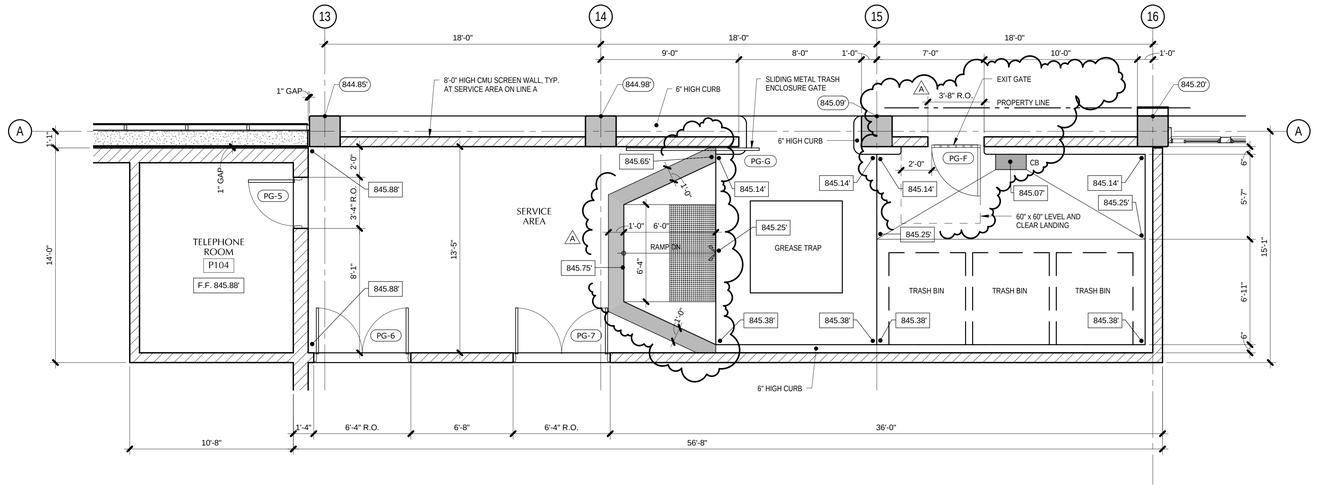

2 SERVICE AREA and TELEPHONE ROOM ENLARGED PLAN
PA-7.4 1/4" = 1'-0"

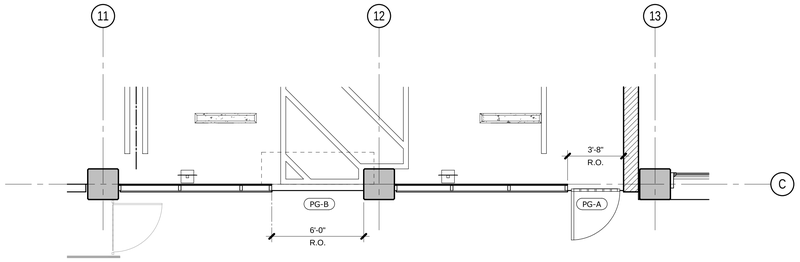

4 PEDESTRIAN ACCESS PLAN at SOUTH
PA-7.4 1/4" = 1'-0"

PG-1 INDICATES DOOR TYPE, REF. PA-8.6 FOR DOOR SCHEDULE & DOOR DETAILS

PG-A INDICATES GATE TYPE, REF. PA-8.7 FOR GATE SCHEDULE & GATE DETAILS

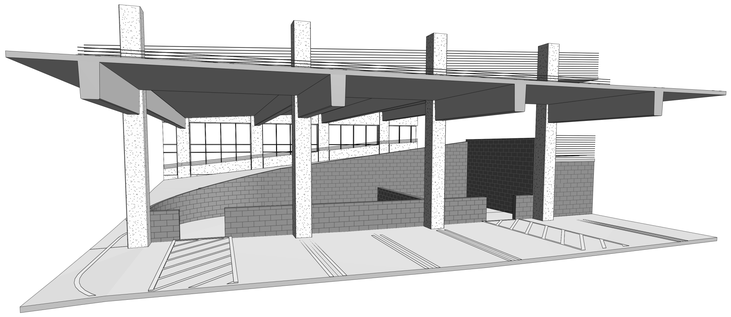

1A RECYCLE/BICYCLE LOCKERS PERSPECTIVE
PA-7.4

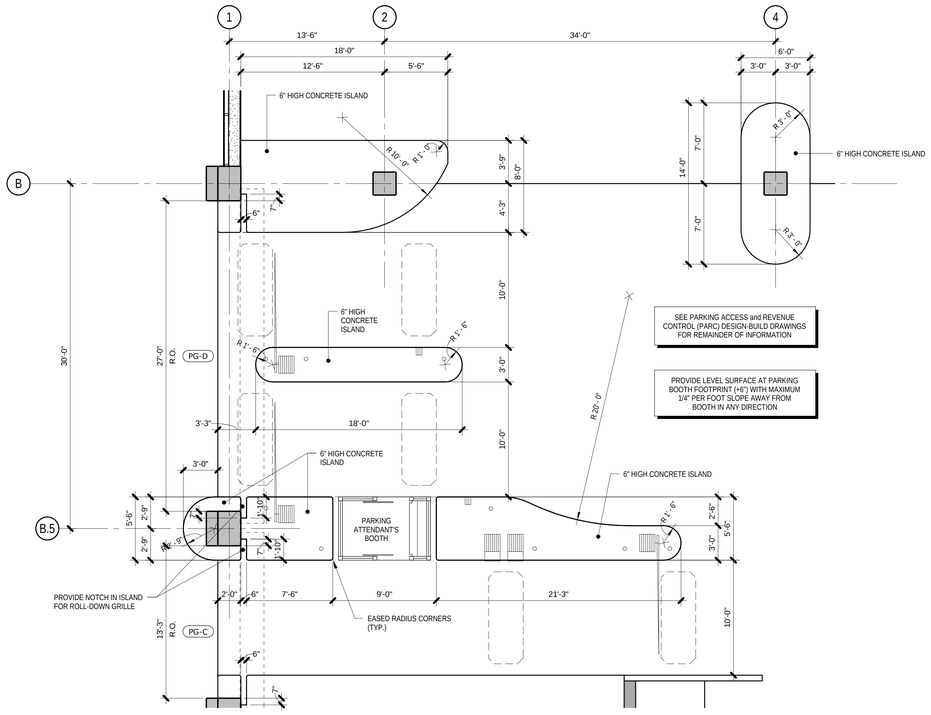

3 PARKING ACCESS and REVENUE CONTROL ENLARGED FLOOR PLAN
PA-7.4 3/16" = 1'-0"

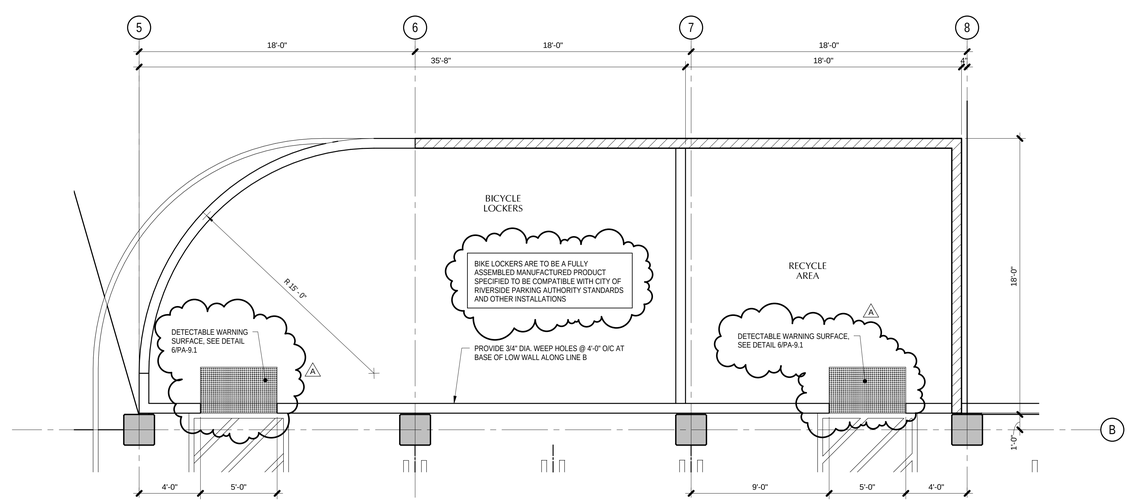

1 RECYCLE/BICYCLE LOCKERS ENLARGED PLAN
PA-7.4 1/4" = 1'-0"

Bayley Construction
3730 S. Susan St.
Suite 200
Santa Ana, CA. 92704
CA. License 734880
Tel 714-540-8863
Fax 714-556-8863

Bayley Construction
8005 S.E. 28th St.
P.O. Box 9004
Mercer Island, WA. 98040
WA. License BAYLECO343JC
Tel 206-621-8884
Fax 206-343-7728

BAYLEY CONSTRUCTION

Pacific Parking DESIGN
6 Venture, Suite 275 949.341.0066 t
Irvine, California 92618 949.341.0099 f

DLR Group WWCOT
Architecture Engineering Planning Interiors
4280 Latham Street, Suite H 951.682.0470 t
Riverside, California 92501 951.682.1801 f

LICENSED ARCHITECT SCOTT BRAYTON BERMAN C-22700 EXP. 9-30-13 STATE OF CALIFORNIA

Public Agency Submittal:
Issued for Bidding:
Issued for Construction:

#	Revisions:
A	09.15.2011 PERMIT SET

PHASE II: FOX ENTERTAINMENT PLAZA: PARKING GARAGE

3601 Market Street
Riverside, CA 92501

CITY of RIVERSIDE

CITY OF RIVERSIDE

3900 Main Street, Riverside, CA 92522

Phase:
Revised 04.19.2011
PPD Project № 10-101

ENLARGED PLANS and PERSPECTIVES

Issued Date: 05.02.2011
Drawn By: RTR
Checked By: SBH

PA-7.4
Sheet №

File Path & Name: C:\Dimension Z\PPD\Projects\2009 - Fox Plaza Parking Structure (Bayley)\Fox PPD Revit\PPD Fox Theater Parking Garage_Owner.rvt
© WWCOT 2009 – Plotted 9/13/2011 11:26:03 AM

MARK	KEYNOTE DESCRIPTION
1	CONCRETE FOOTING (REF. STRUCT'L. DRAWINGS)
2	GRADE/FINISHED EXTERIOR SURFACE (REF. CIVIL DRAWINGS)
3	CMU RETAINING WALL (REF. STRUCT'L DRAWINGS)
4	CONCRETE FLOOR SLAB ON GRADE
5	CONCRETE RAMP SLAB ON GRADE
6	CAST-IN-PLACE CONCRETE MOMENT FRAME COLUMN
7	CAST-IN-PLACE CONCRETE GRAVITY COLUMN
8	CAST-IN-PLACE CONCRETE GIRDER
9	CAST-IN-PLACE CONCRETE BEAM
10	CAST-IN-PLACE CONCRETE SPANDREL
11	CAST-IN-PLACE CONCRETE MOMENT FRAME BEAM
12	ELEVATED CONCRETE FLOOR SLAB
13	ELEVATED CONCRETE RAMP SLAB
14	CMU HOISTWAY
15	GALVANIZED BARRIER CABLES
16	BARRIER BEAM ASSEMBLY (REF. A-10 SHEETS)
17	SIGNAGE (REF. A-10 SHEETS)
19	REVEAL
20	CONCRETE FILLED, METAL PAN STAIRS (PAINTED)
21	METAL GUARDRAIL (PAINTED)
22	METAL STUD & PLASTER WALL
24	METAL FRAMED FACADE
25	METAL SCREENED FACADE
26	STOREFRONT FRAMING with GLAZING (MATCH EXISTING THEATRE)
27	DECORATIVE LANTERN - FOAM (MATCH EXISTING THEATRE)
28	MEDALLION - FOAM (MATCH EXISTING THEATRE)
29	METAL STUD and EIFS CORNICE
30	METAL DOOR (PAINTED)
31	ADJACENT STRUCTURE
32	CMU WALL (REF. STRUCT'L DRAWINGS)
33	CONCRETE-FILLED STEEL PIPE BOLLARD
34	DECORATIVE METAL
35	UPTURNED CAST-IN-PLACE CONCRETE SPANDREL BEAM
36	STAIR COLUMN
37	PEDESTRIAN GATE WITH PANIC HARDWARE (PAINTED)
38	METAL SLIDING TRASH ENCLOSURE GATE (PAINTED)
39	CONCRETE-FILLED METAL DECK
40	METAL HANDRAIL (PAINTED)
41	CONCRETE STAIRS OVER FOAM (REF. STRUCT'L DRAWINGS)

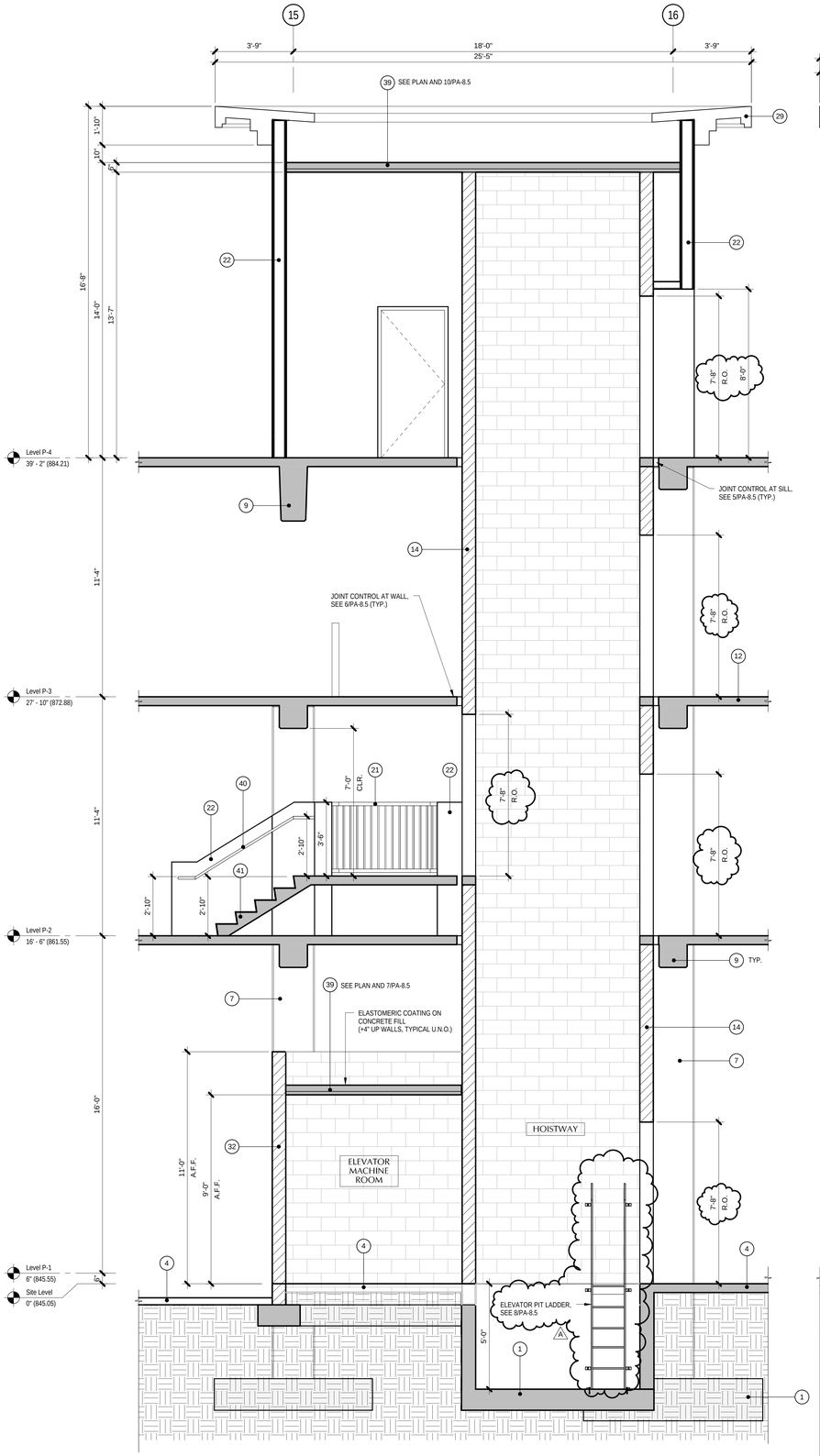

3 PA-7.5 HOISTWAY and STAIR #3 SECTION

3/8" = 1'-0"

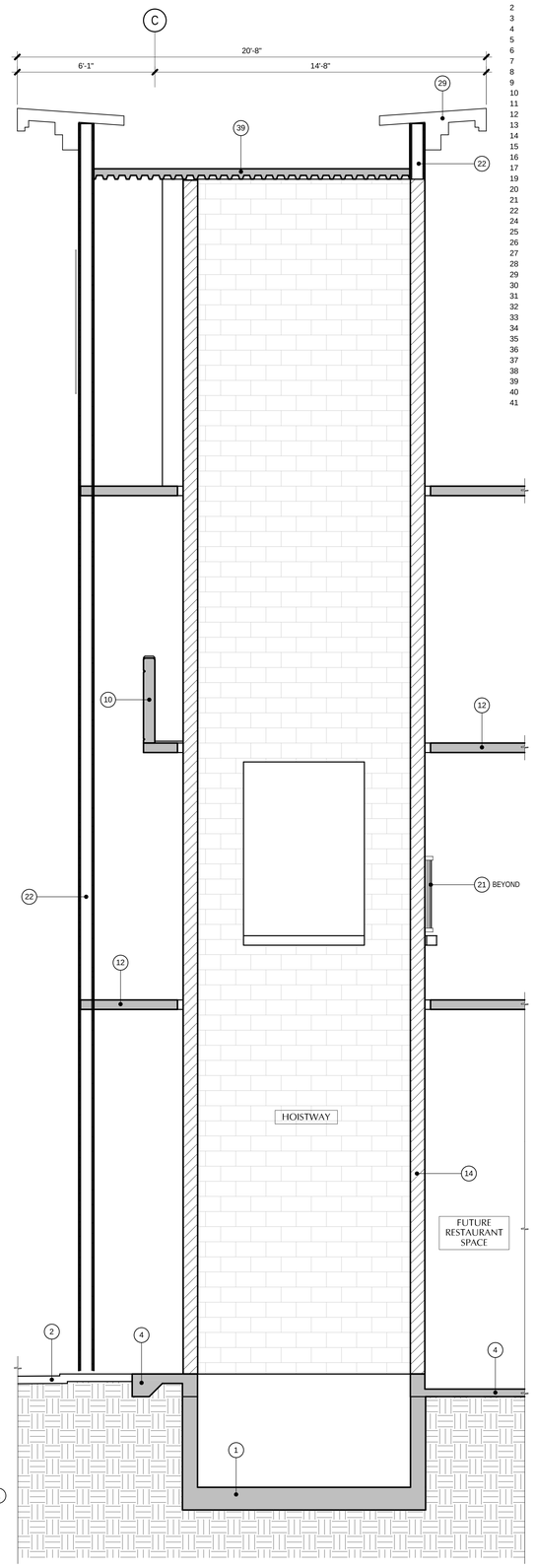

2 PA-7.5 HOISTWAY SECTION - 2

3/8" = 1'-0"

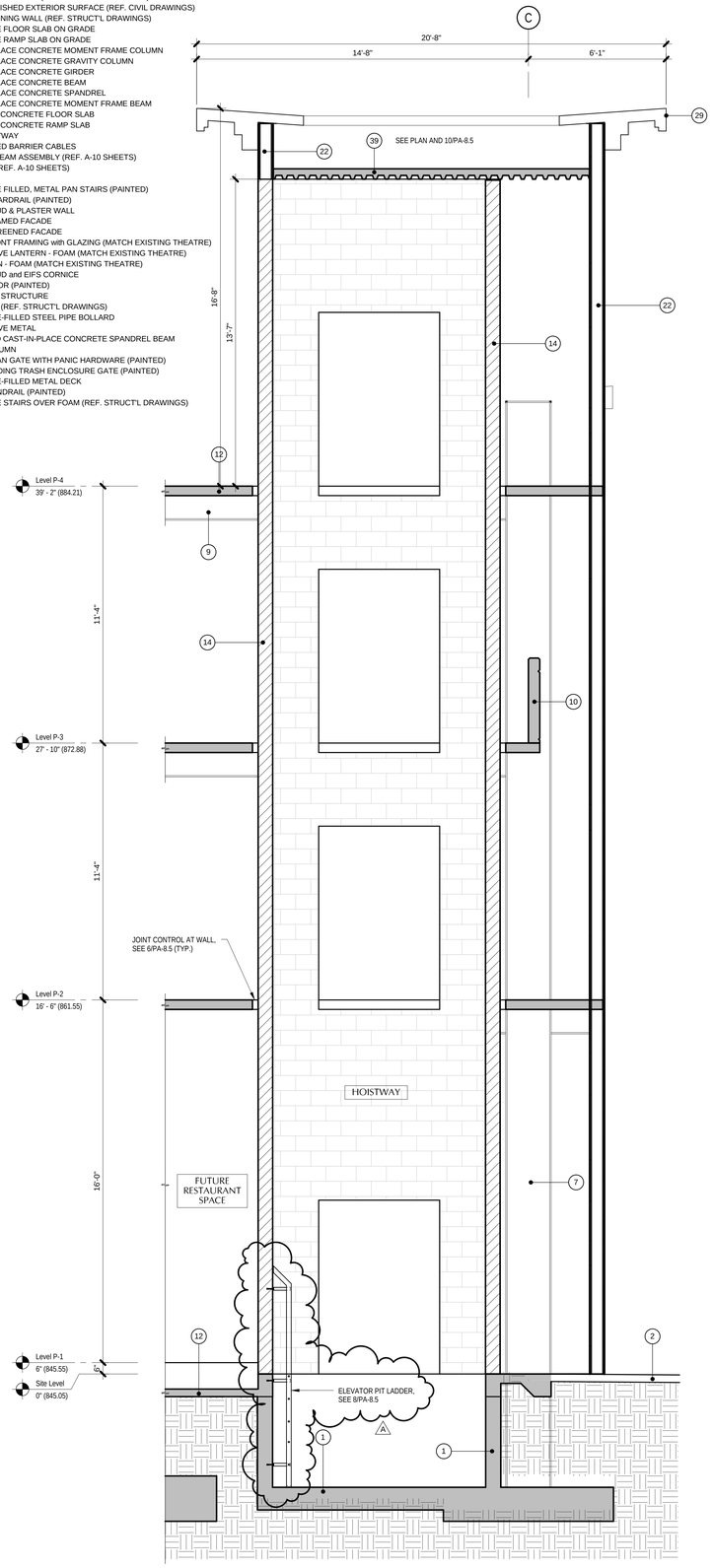

1 PA-7.5 HOISTWAY SECTION

3/8" = 1'-0"

Bayley Construction
3730 S. Susan St.
Suite 200
Santa Ana, CA. 92704
CA. License 734880
Tel 714-540-8863
Fax 714-556-8863

Bayley Construction
8005 S.E. 28th St.
P.O. Box 9004
Mercer Island, WA. 98040
WA. License BAYLECO343JC
Tel 206-621-8884
Fax 206-343-7728

Pacific Parking DESIGN
6 Venture, Suite 275 949.341.0066 t
Irvine, California 92618 949.341.0099 f

DLR Group WWCOT
Architecture Engineering Planning Interiors
4280 Latham Street, Suite H 951.682.0470 t
Riverside, California 92501 951.682.1801 f

LICENSED ARCHITECT
SCOTT BRAYTON WERMAN
C-22700
EXP. 9-30-13
STATE OF CALIFORNIA

Public Agency Submittal:
Issued for Bidding:
Issued for Construction:

Revisions:

A 09.15.2011 PERMIT SET

PHASE II: FOX ENTERTAINMENT PLAZA: PARKING GARAGE

3601 Market Street
Riverside, CA 92501

CITY of RIVERSIDE

CITY OF RIVERSIDE

3900 Main Street, Riverside, CA 92522

Phase:
Revised 04.19.2011
PPD Project № 10-101

HOISTWAY and STAIR #1 SECTION

Issued Date: 05.02.2011
Drawn By: RTR
Checked By: SBH

PA-7.5

Sheet №

File Path & Name: C:\Dimension Z\PPD\Projects\2009 - Fox Plaza Parking Structure (Bayley)\Fox PPD Revit\PPD Fox Theater Parking Garage_Owner.rvt
© WWCOT 2009 – Plotted 9/13/2011 11:27:33 AM

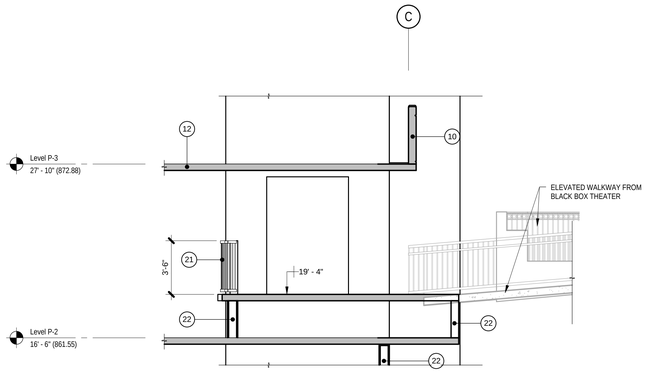

3 PA-7.6 STAIR #3 SECTION
1/4" = 1'-0"

MARK	KEYNOTE DESCRIPTION
1	CONCRETE FOOTING (REF. STRUCT'L. DRAWINGS)
2	GRADE/FINISHED EXTERIOR SURFACE (REF. CIVIL DRAWINGS)
3	CMU RETAINING WALL (REF. STRUCT'L DRAWINGS)
4	CONCRETE FLOOR SLAB ON GRADE
5	CONCRETE RAMP SLAB ON GRADE
6	CAST-IN-PLACE CONCRETE MOMENT FRAME COLUMN
7	CAST-IN-PLACE CONCRETE GRAVITY COLUMN
8	CAST-IN-PLACE CONCRETE GIRDER
9	CAST-IN-PLACE CONCRETE BEAM
10	CAST-IN-PLACE CONCRETE SPANDREL
11	CAST-IN-PLACE CONCRETE MOMENT FRAME BEAM
12	ELEVATED CONCRETE FLOOR SLAB
13	ELEVATED CONCRETE RAMP SLAB
14	CMU HOISTWAY
15	GALVANIZED BARRIER CABLES
16	BARRIER BEAM ASSEMBLY (REF. A-10 SHEETS)
17	SIGNAGE (REF. A-10 SHEETS)
19	REVEAL
20	CONCRETE FILLED, METAL PAN STAIRS (PAINTED)
21	METAL GUARDRAIL (PAINTED)
22	METAL STUD & PLASTER WALL
24	METAL FRAMED FACADE
25	METAL SCREENED FACADE
26	STOREFRONT FRAMING with GLAZING (MATCH EXISTING THEATRE)
27	DECORATIVE LANTERN - FOAM (MATCH EXISTING THEATRE)
28	MEDALLION - FOAM (MATCH EXISTING THEATRE)
29	METAL STUD and EIFS CORNICE
30	METAL DOOR (PAINTED)
31	ADJACENT STRUCTURE
32	CMU WALL (REF. STRUCT'L DRAWINGS)
33	CONCRETE-FILLED STEEL PIPE BOLLARD
34	DECORATIVE METAL
35	UPTURNED CAST-IN-PLACE CONCRETE SPANDREL BEAM
36	STAIR COLUMN
37	PEDESTRIAN GATE WITH PANIC HARDWARE (PAINTED)
38	METAL SLIDING TRASH ENCLOSURE GATE (PAINTED)
39	CONCRETE-FILLED METAL DECK
40	METAL HANDRAIL (PAINTED)
41	CONCRETE STAIRS OVER FOAM (REF. STRUCT'L DRAWINGS)

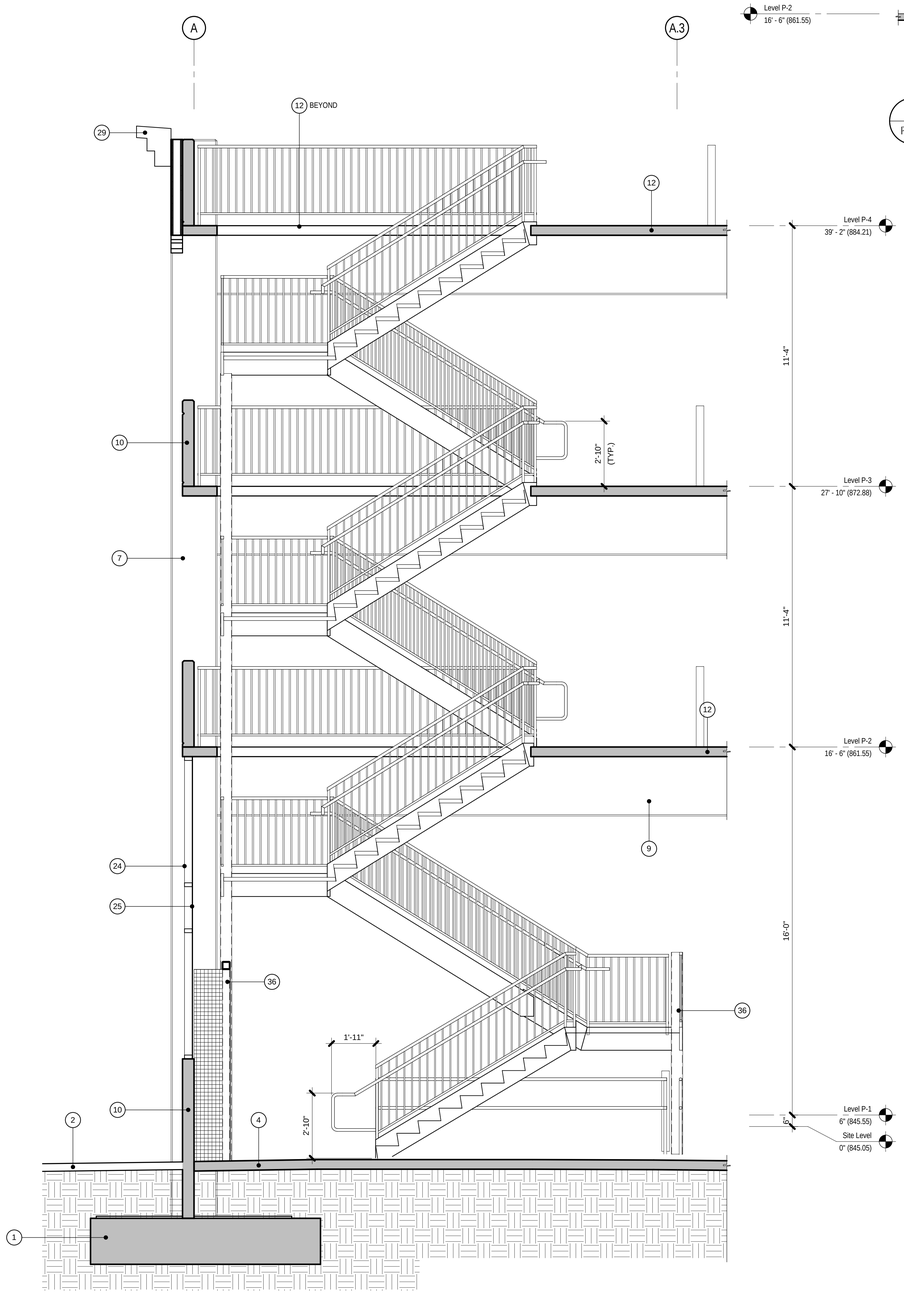

2 PA-7.6 STAIR #2 SECTION
3/8" = 1'-0"

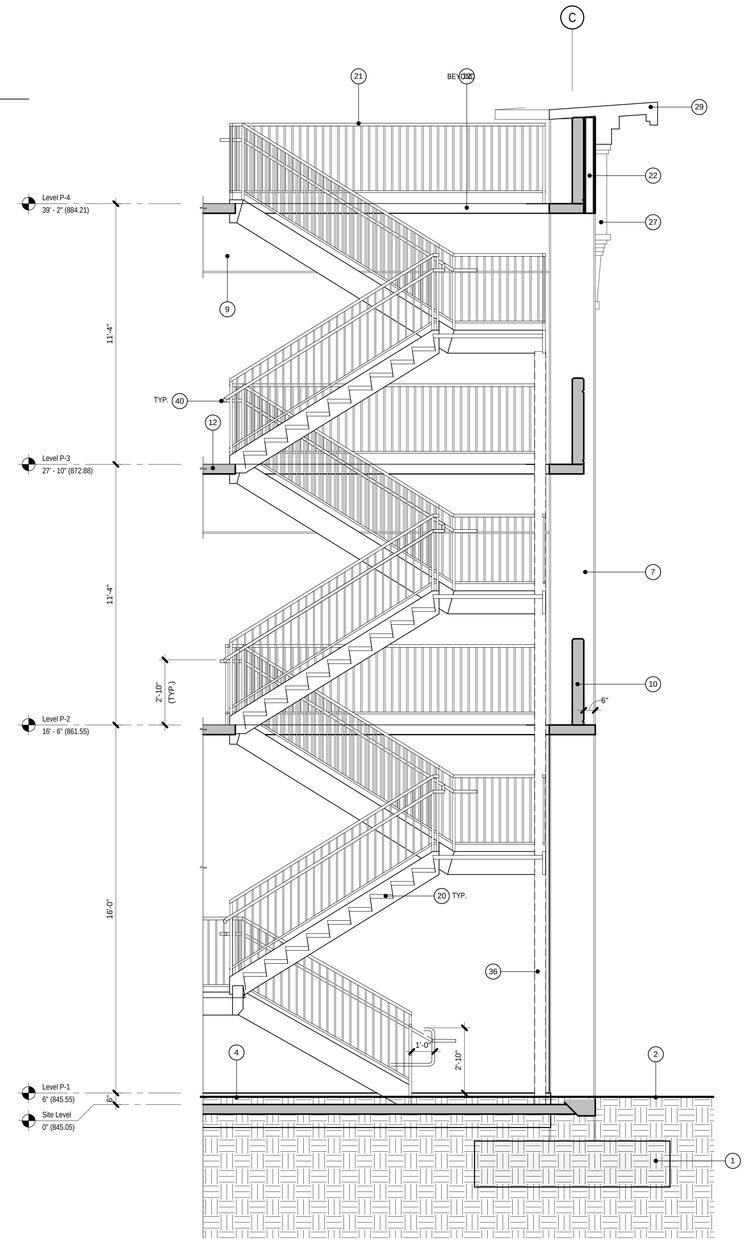

1 PA-7.6 STAIR #1 SECTION
3/8" = 1'-0"

Bayley Construction
3730 S. Susan St.
Suite 200
Santa Ana, CA. 92704
CA. License 734880
Tel 714-540-8863
Fax 714-556-8863

Bayley Construction
8005 S.E. 28th St.
P.O. Box 9004
Mercer Island, WA. 98040
WA. License BAYLECO343JC
Tel 206-621-8884
Fax 206-343-7728

BAYLEY CONSTRUCTION

Pacific Parking DESIGN
6 Venture, Suite 275 949.341.0066 t
Irvine, California 92618 949.341.0099 f

DLR Group WWCOT
Architecture Engineering Planning Interiors
4280 Latham Street, Suite H 951.682.0470 t
Riverside, California 92501 951.682.1801 f

LICENSED ARCHITECT SCOTT BRAYTON BERMAN C-22700 EXP. 9-30-13 STATE OF CALIFORNIA

Public Agency Submittal:
Issued for Bidding:
Issued for Construction:

Revisions:

A 09.15.2011 PERMIT SET

PHASE II: FOX ENTERTAINMENT PLAZA: PARKING GARAGE

3601 Market Street
Riverside, CA 92501

CITY of RIVERSIDE

CITY OF RIVERSIDE

3900 Main Street, Riverside, CA 92522

Phase:
Revised 04.19.2011
PPD Project № 10-101

STAIR SECTIONS

Issued Date: 05.02.2011
Drawn By: RTR
Checked By: SBH

PA-7.6

Sheet №

File Path & Name: C:\Dimension Z\PPD\Projects\2009 - Fox Plaza Parking Structure (Bayley)\Fox PPD Revit\PPD Fox Theater Parking Garage_Owner.rvt
© WWCOT 2009 - Plotted 9/13/2011 11:29:16 AM

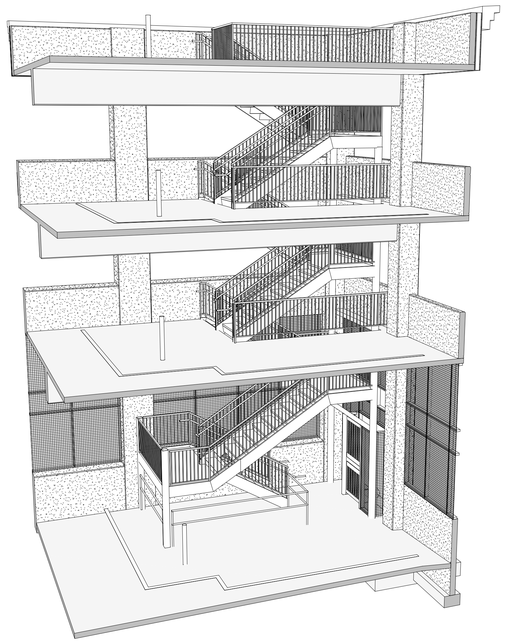

6 PA-7.7 STAIR #2 PERSPECTIVE - 3

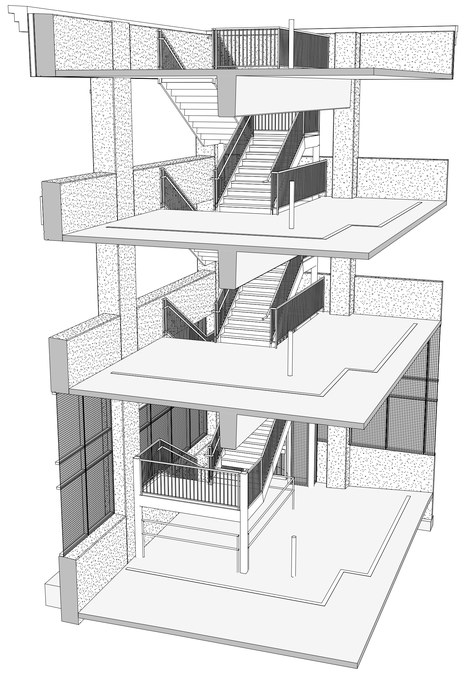

5 PA-7.7 STAIR #2 PERSPECTIVE - 2

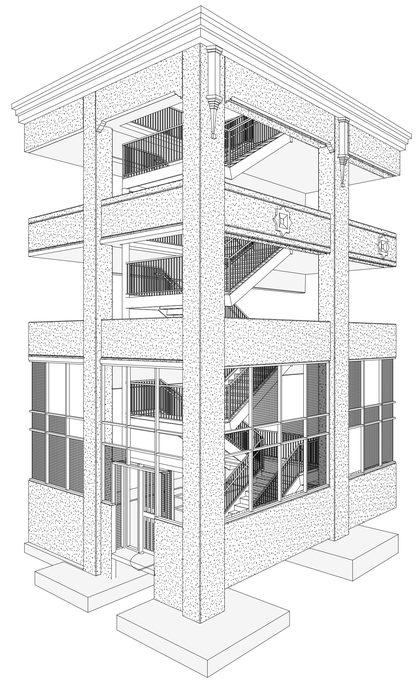

4 PA-7.7 STAIR #2 PERSPECTIVE - 1

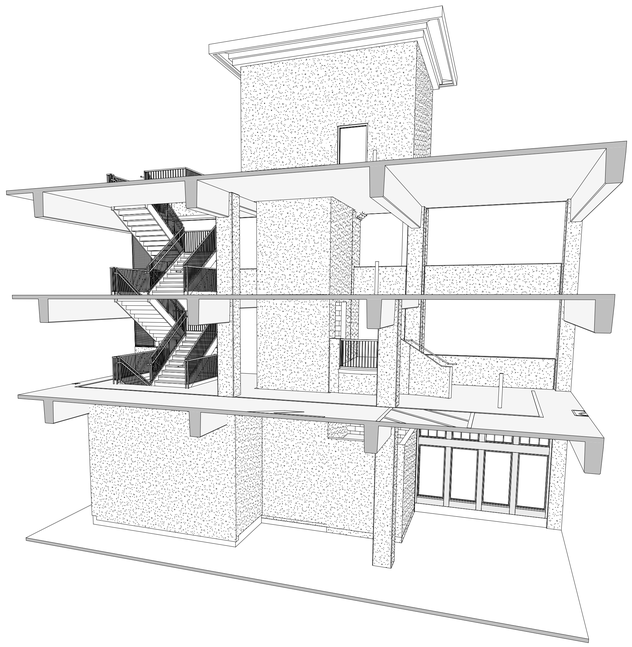

3 PA-7.7 ELEVATOR and STAIR #1 PERSPECTIVE - 3

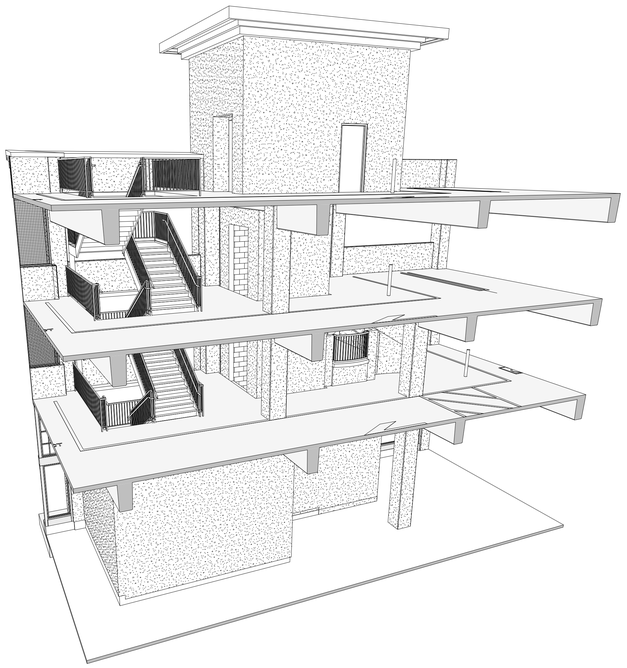

2 PA-7.7 ELEVATOR and STAIR #1 PERSPECTIVE - 2

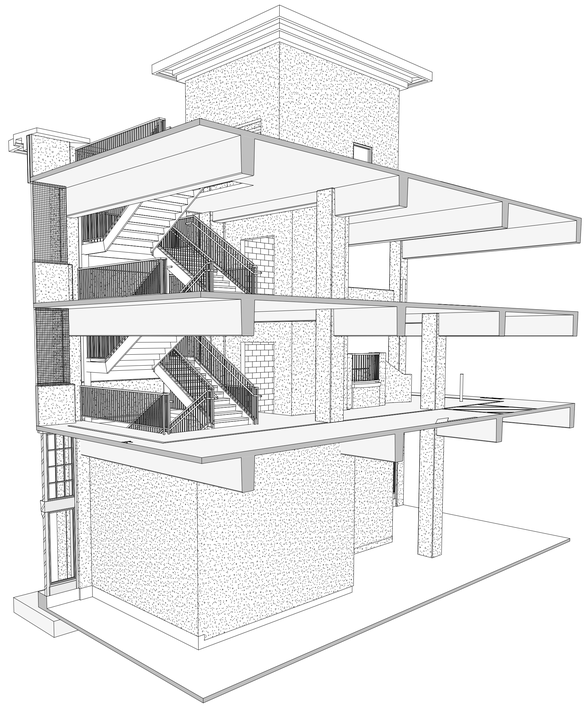

1 PA-7.7 ELEVATOR and STAIR #1 PERSPECTIVE - 1

Bayley Construction
3730 S. Susan St.
Suite 200
Santa Ana, CA. 92704
CA. License 734880
Tel 714-540-8863
Fax 714-556-8863

Bayley Construction
8005 S.E. 28th St.
P.O. Box 9004
Mercer Island, WA. 98040
WA. License BAYLEC0343C
Tel 206-621-8884
Fax 206-343-7728

BAYLEY CONSTRUCTION

Pacific Parking DESIGN

6 Venture, Suite 275 949.341.0066 t
Irvine, California 92618 949.341.0099 f

DLR Group WWCOT
Architecture Engineering Planning Interiors

4280 Latham Street, Suite H 951.682.0470 t
Riverside, California 92501 951.682.1801 f

LICENSED ARCHITECT
SCOTT BRAYTON BERMAN
C-22700
EXP. 9-30-13
STATE OF CALIFORNIA

Public Agency Submittal:
Issued for Bidding:
Issued for Construction:

Revisions:

A 09.15.2011 PERMIT SET

PHASE II:
FOX
ENTERTAINMENT
PLAZA:
PARKING GARAGE

3601 Market Street
Riverside, CA 92501

CITY of RIVERSIDE

CITY OF RIVERSIDE

3900 Main Street, Riverside, CA 92522

Phase:
Revised 04.19.2011
PPD Project № 10-101

ELEVATOR and STAIR PERSPECTIVES

Issued Date: 05.02.2011
Drawn By: RTR
Checked By: SBH

PA-7.7
Sheet №

File Path & Name: C:\Dimension Z\PPD Projects\2009 - Fox Plaza Parking Structure (Bayley)\Fox PPD Revit\PPD Fox Theater Parking Garage_Owner.rvt
© WWCOT 2009 – Plotted 9/13/2011 11:29:51 AM

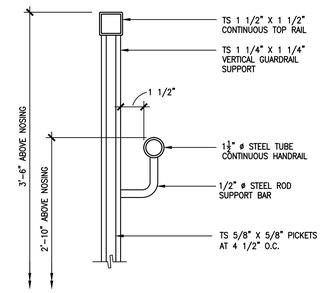

10 PA-8.1 CONNECTION DETAIL
SCALE: 3" = 1'-0"

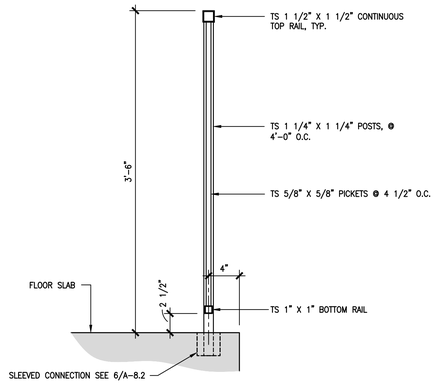

9 PA-8.1 GUARDRAIL DETAIL
SCALE: 1 1/2" = 1'-0"

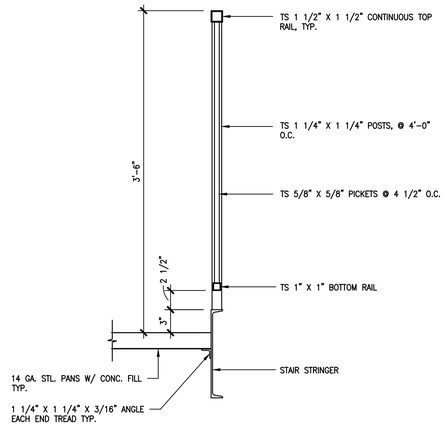

8 PA-8.1 GUARDRAIL DETAIL
SCALE: 1 1/2" = 1'-0"

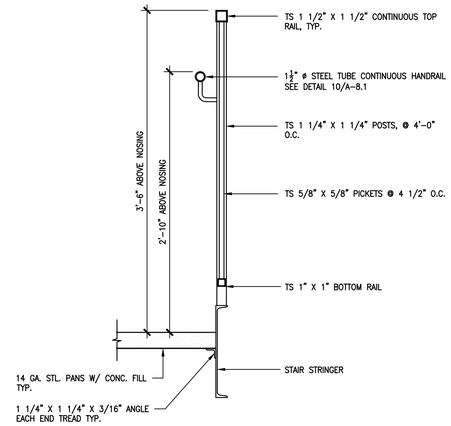

7 PA-8.1 TYP. HANDRAIL DETAIL
SCALE: 1 1/2" = 1'-0"

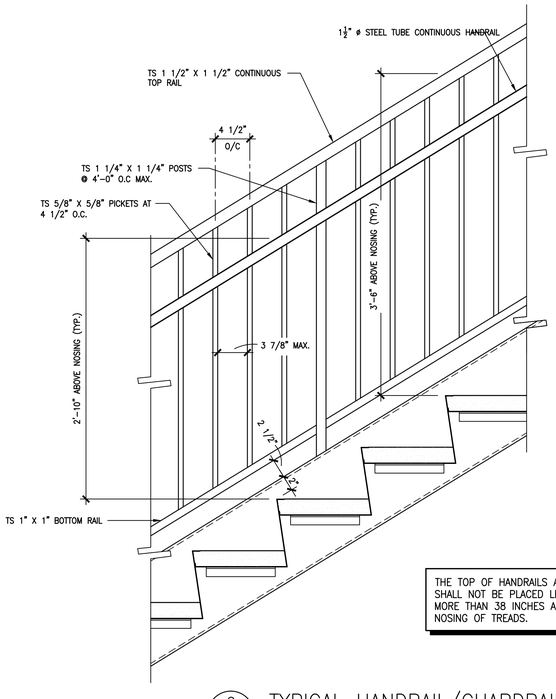

6 PA-8.1 TYPICAL HANDRAIL/GUARDRAIL DETAIL
SCALE: 1 1/2" = 1'-0"

DESIGN–BUILD STAIRS

THESE DRAWINGS DESCRIBE THE FINISHED CONFIGURATION AND DESIGN REQUIREMENTS OF THE STAIRS. THE STAIRS ARE TO BE A DESIGN–BUILD FURNISHED ITEM FOR THE PROJECT. ALL MEANS AND METHODS OF CONSTRUCTION ARE THE RESPONSIBILITY OF THE SUB–CONTRACTOR. SHOP DRAWINGS AND DESIGN CALCULATIONS FOR THE STEEL STAIRS SHALL BE SUBMITTED FOR APPROVAL PRIOR TO FABRICATION AND ERECTION.

THIS SUB–CONTRACTOR PACKAGE SHALL BE STAMPED AND SIGNED BY AN ENGINEER LICENSED IN THE STATE OF CALIFORNIA. THE STAIR SUB–CONTRACTOR IS RESPONSIBLE FOR THEIR OWN PARTICULAR DESIGN ITEMS, INCLUDING ATTACHMENTS TO THE STRUCTURE & FOUNDATION DESIGN.

PACIFIC PARKING DESIGN WILL REVIEW THE DESIGN–BUILD PACKAGE FOR GENERAL CONFORMANCE TO THE OVERALL DESIGN CRITERIA ONLY.

THE RISE OF STEPS AND STAIRS SHALL NOT BE LESS THAN 4 INCHES NOR MORE THAN 7 INCHES. THE GREATEST RISER HEIGHT WITHIN ANY FLIGHT OF STAIRS SHALL NOT EXCEED THE SMALLEST BY MORE THAN 3/8 INCH. THE RUN SHALL NOT BE LESS THAN 11" AS MEASURED HORIZONTALLY BETWEEN THE VERTICAL PLANES OF THE FURTHERMOST PROJECTION OF ADJACENT TREADS OR NOSINGS. TREADS SHALL BE OF UNIFORM SIZE AND SHAPE, EXCEPT THE LARGEST TREAD RUN WITHIN ANY FLIGHT OF STAIRS SHALL NOT EXCEED THE SMALLEST BY MORE THAN 3/8 INCH.

MAINTAIN MINIMUM 6'–8" VERTICAL HEADROOM ABOVE ALL STAIRS MEASURED VERTICALLY FROM A PLANE PARALLEL AND TANGENT TO THE STAIR WAY TREAD NOSINGS TO THE SOFFIT OR OTHER CONSTRUCTION ABOVE AT ALL POINTS.

THE TOP OF HANDRAILS AND HANDRAIL EXTENSIONS SHALL NOT BE PLACED LESS THAN 34 INCHES NOR MORE THAN 38 INCHES ABOVE LANDINGS AND THE NOSING OF TREADS.

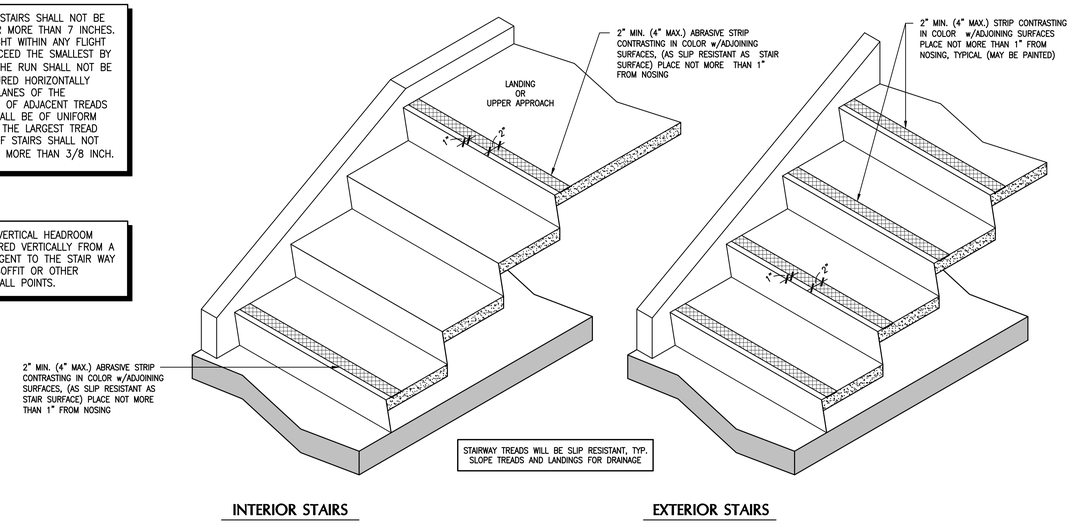

5 PA-8.1 STAIR WARNING STRIPING DETAIL
SCALE: 1" = 1'-0"

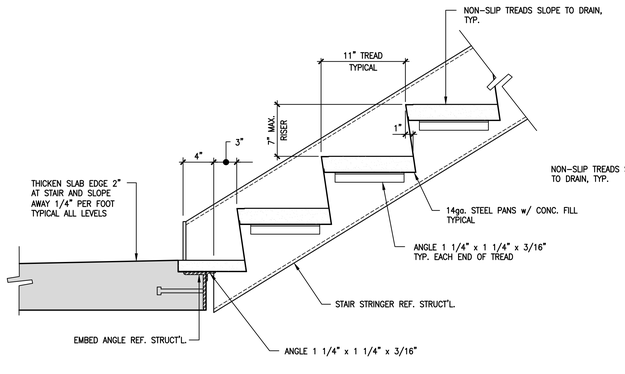

4 PA-8.1 TYPICAL STAIR DETAIL
SCALE: 1 1/2" = 1'-0"

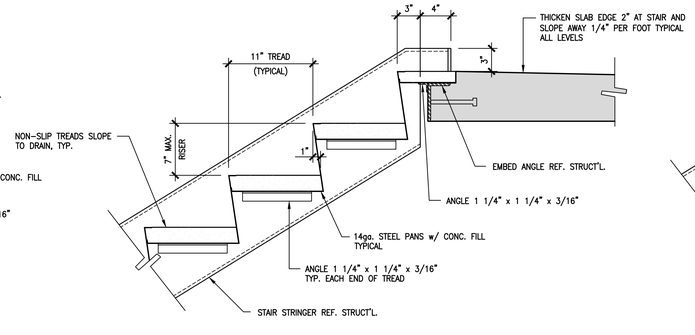

3 PA-8.1 TYPICAL STAIR DETAIL
SCALE: 1 1/2" = 1'-0"

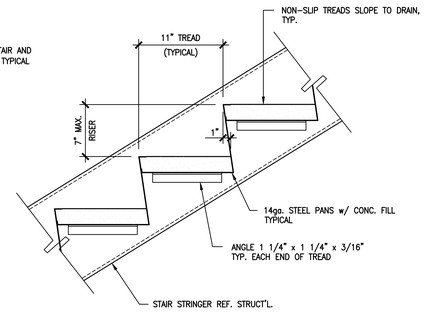

2 PA-8.1 TYPICAL STAIR DETAIL
SCALE: 1 1/2" = 1'-0"

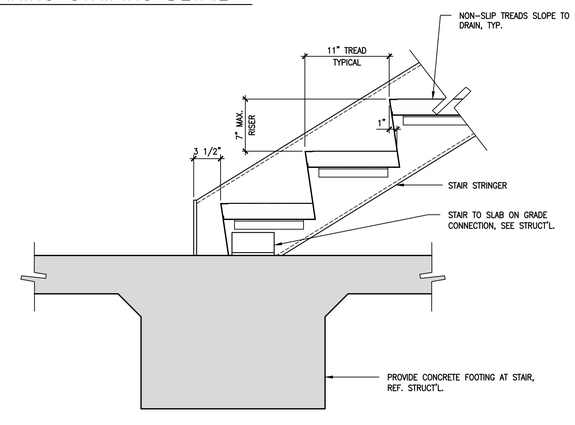

1 PA-8.1 TYPICAL STAIR DETAIL
SCALE: 1 1/2" = 1'-0"

Bayley Construction
3730 S. Susan St.
Suite 200
Santa Ana, CA, 92704
CA. License 734880
Tel 714-540-8863
Fax 714-556-8863

Bayley Construction
8005 S.E. 28th St.
P.O. Box 9004
Mercer Island, WA. 98040
WA. License BAYLEC034JC
Tel 206-621-8884
Fax 206-343-7728

Pacific Parking DESIGN
6 Venture, Suite 275 949.341.0066 t
Irvine, California 92618 949.341.0099 f

DLR Group WWCOT
Architecture Engineering Planning Interiors
4280 Latham Street, Suite H 951.682.0470 t
Riverside, California 92501 951.682.1801 f

LICENSED ARCHITECT SCOTT BRAYTON BERMAN C-22700 EXP. 9-30-13 STATE OF CALIFORNIA

Public Agency Submittal:
Issued for Bidding:
Issued for Construction:

Revisions:

A 09.15.2011 PERMIT SET

PHASE II:
FOX ENTERTAINMENT PLAZA:
PARKING GARAGE

3601 Market Street,
Riverside, CA 92501

CITY of RIVERSIDE

3900 Main Street, Riverside, CA 92522

Phase:
Revised
PPD Project № 10-101

TYPICAL STAIR DETAILS

Issued Date: 05.02.2011
Drawn By: RTR
Checked By: SBH

PA-8.1
Sheet №

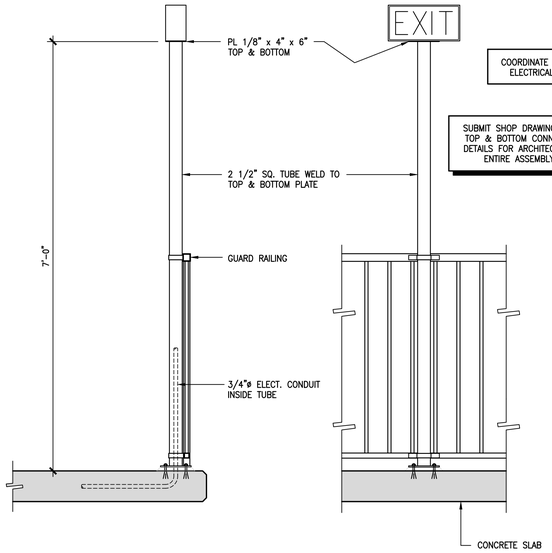

COORDINATE LOCATION w/ ELECTRICAL DRAWINGS

SUBMIT SHOP DRAWING, SHOW NON-CORROSIVE TOP & BOTTOM CONNECTIONS & METAL STRAP DETAILS FOR ARCHITECTS APPROVAL. GALVANIZE ENTIRE ASSEMBLY AFTER FABRICATION

7 / PA-8.2 EXIT SIGN DETAIL
SCALE: 1" = 1'-0"

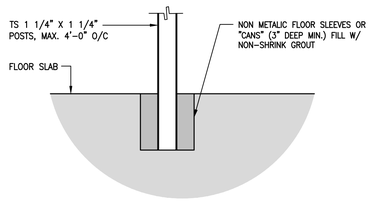

6 / PA-8.2 FLOOR MOUNTING DETAIL
SCALE: 3" = 1'-0"

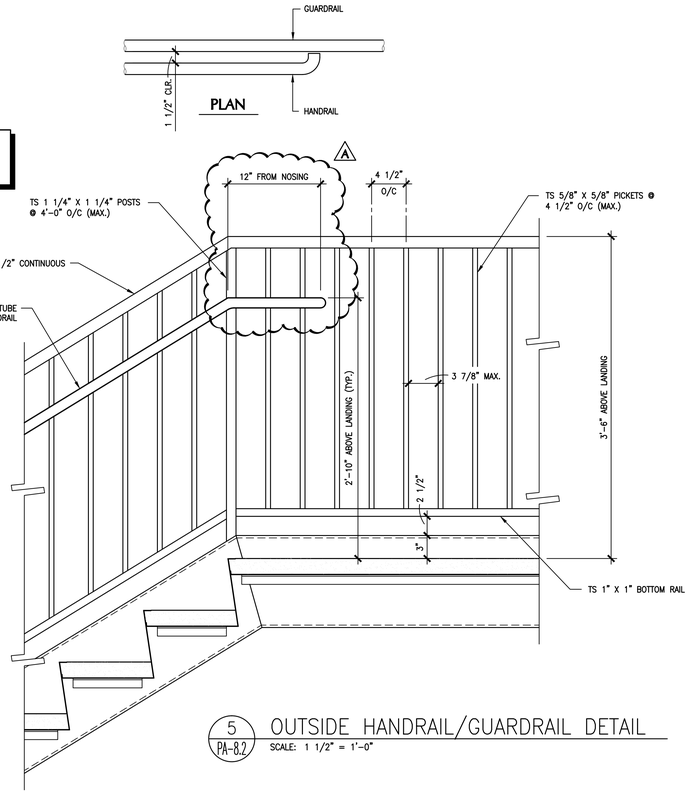

5 / PA-8.2 OUTSIDE HANDRAIL/GUARDRAIL DETAIL
SCALE: 1 1/2" = 1'-0"

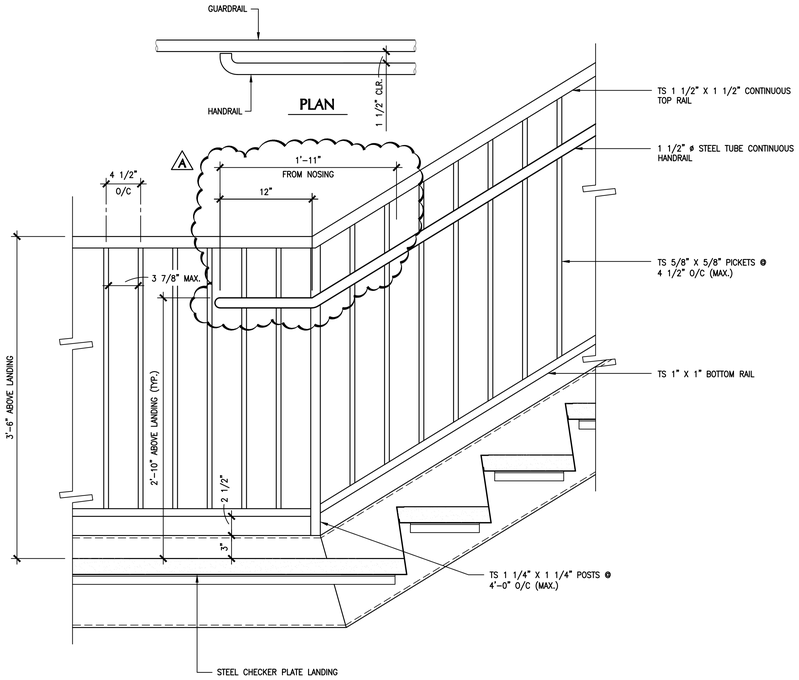

4 / PA-8.2 OUTSIDE HANDRAIL/GUARDRAIL DETAIL
SCALE: 1 1/2" = 1'-0"

THE RISE OF STEPS AND STAIRS SHALL NOT BE LESS THAN 4 INCHES NOR MORE THAN 7 INCHES. THE GREATEST RISER HEIGHT WITHIN ANY FLIGHT OF STAIRS SHALL NOT EXCEED THE SMALLEST BY MORE THAN 3/8 INCH. THE RUN SHALL NOT BE LESS THAN 11" AS MEASURED HORIZONTALLY BETWEEN THE VERTICAL PLANES OF THE FURTHERMOST PROJECTION OF ADJACENT TREADS OR NOSINGS. TREADS SHALL BE OF UNIFORM SIZE AND SHAPE, EXCEPT THE LARGEST TREAD RUN WITHIN ANY FLIGHT OF STAIRS SHALL NOT EXCEED THE SMALLEST BY MORE THAN 3/8 INCH.

MAINTAIN MINIMUM 6'-8" VERTICAL HEADROOM ABOVE ALL STAIRS MEASURED VERTICALLY FROM A PLANE PARALLEL AND TANGENT TO THE STAIR WAY TREAD NOSINGS TO THE SOFFIT OR OTHER CONSTRUCTION ABOVE AT ALL POINTS.

THE TOP OF HANDRAILS AND HANDRAIL EXTENSIONS SHALL NOT BE PLACED LESS THAN 34 INCHES NOR MORE THAN 38 INCHES ABOVE LANDINGS AND THE NOSING OF TREADS.

DESIGN-BUILD STAIRS

THESE DRAWINGS DESCRIBE THE FINISHED CONFIGURATION AND DESIGN REQUIREMENTS OF THE STAIRS. THE STAIRS ARE TO BE A DESIGN-BUILD FURNISHED ITEM FOR THE PROJECT. ALL MEANS AND METHODS OF CONSTRUCTION ARE THE RESPONSIBILITY OF THE SUB-CONTRACTOR. SHOP DRAWINGS AND DESIGN CALCULATIONS FOR THE STEEL STAIRS SHALL BE SUBMITTED FOR APPROVAL PRIOR TO FABRICATION AND ERECTION.

THIS SUB-CONTRACTOR PACKAGE SHALL BE STAMPED AND SIGNED BY AN ENGINEER LICENSED IN THE STATE OF CALIFORNIA. THE STAIR SUB-CONTRACTOR IS RESPONSIBLE FOR THEIR OWN PARTICULAR DESIGN ITEMS, INCLUDING ATTACHMENTS TO THE STRUCTURE & FOUNDATION DESIGN.

PACIFIC PARKING DESIGN WILL REVIEW THE DESIGN-BUILD PACKAGE FOR GENERAL CONFORMANCE TO THE OVERALL DESIGN CRITERIA ONLY.

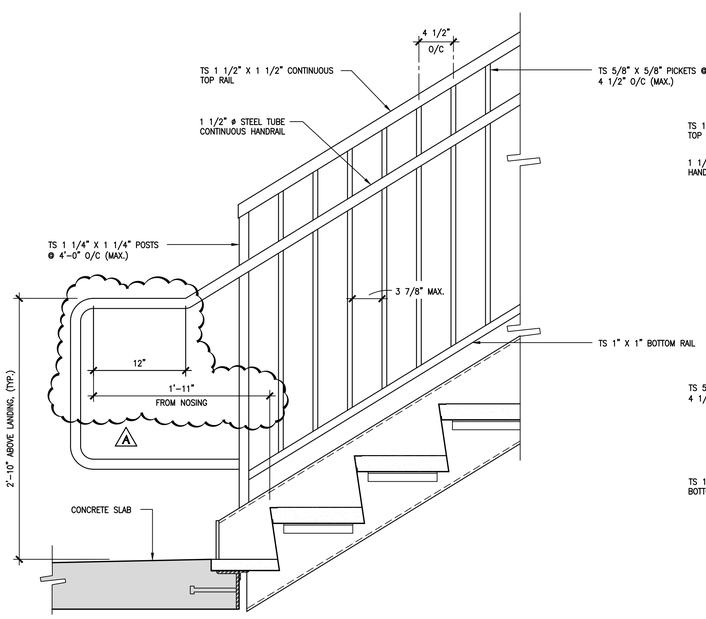

3 / PA-8.2 TYPICAL STAIR DETAIL
SCALE: 1 1/2" = 1'-0"

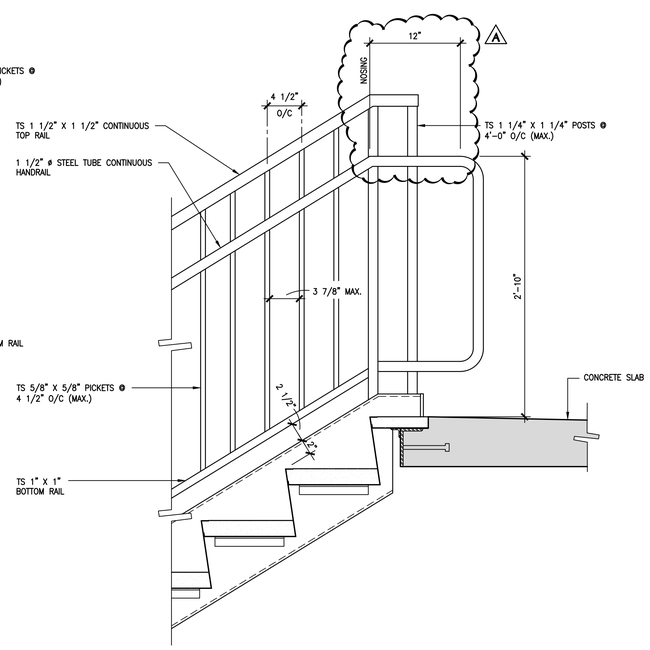

2 / PA-8.2 GUARDRAIL/HANDRAIL DETAIL
SCALE: 1 1/2" = 1'-0"

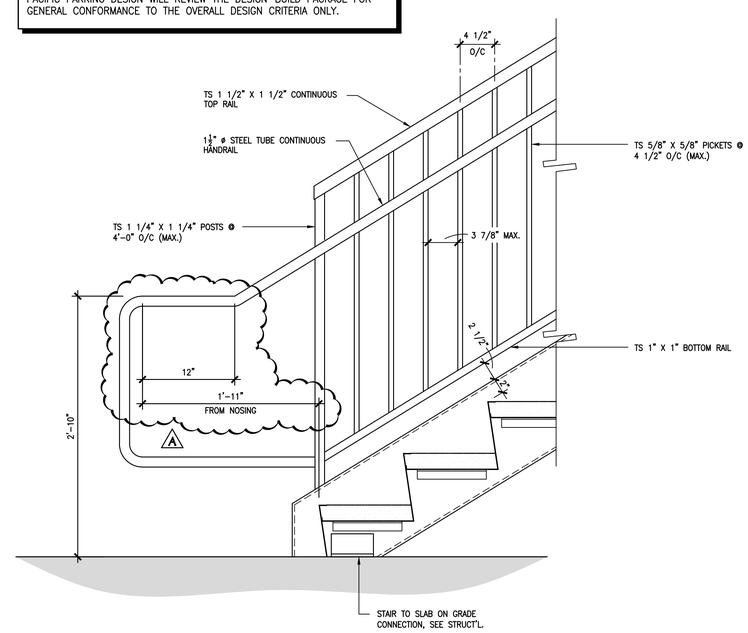

1 / PA-8.2 GUARDRAIL/HANDRAIL DETAIL
SCALE: 1 1/2" = 1'-0"

Bayley Construction
3730 S. Susan St.
Suite 200
Santa Ana, CA, 92704
CA. License 734880
Tel 714-540-8863
Fax 714-556-8863

Bayley Construction
8005 S.E. 28th St.
P.O. Box 9004
Mercer Island, WA. 98040
WA. License BAYLEC034JC
Tel 206-621-8884
Fax 206-343-7728

Pacific Parking DESIGN
6 Venture, Suite 275 949.341.0066 t
Irvine, California 92618 949.341.0099 f

DLR Group WWCOT
Architecture Engineering Planning Interiors
4280 Latham Street, Suite H 951.682.0470 t
Riverside, California 92501 951.682.1801 f

LICENSED ARCHITECT SCOTT BRAYTON BERMAN C-22700 EXP. 9-30-13 STATE OF CALIFORNIA

Public Agency Submittal:
Issued for Bidding:
Issued for Construction:

Revisions:

A 09.15.2011 PERMIT SET

PHASE II:
FOX
ENTERTAINMENT
PLAZA:
PARKING GARAGE

3601 Market Street,
Riverside, CA 92501

CITY of RIVERSIDE

3900 Main Street, Riverside, CA 92522

Phase:
Revised
PPD Project № 10-101

TYPICAL STAIR DETAILS

Issued Date: 05.02.2011
Drawn By: RTR
Checked By: SBH

PA-8.2
Sheet №

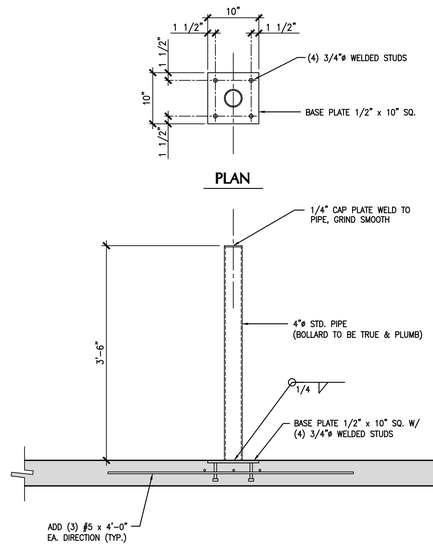

ENTIRE ASSEMBLY TO BE HOT DIPPED GALVANIZED AFTER FABRICATION. BOLLARDS TO BE PAINTED SAFETY YELLOW & BASE PLATE (GRAY) EXPOSED AT SLAB

3A / PA-8.3 ALTERNATE BOLLARD DETAIL

SCALE: 1" = 1'-0"

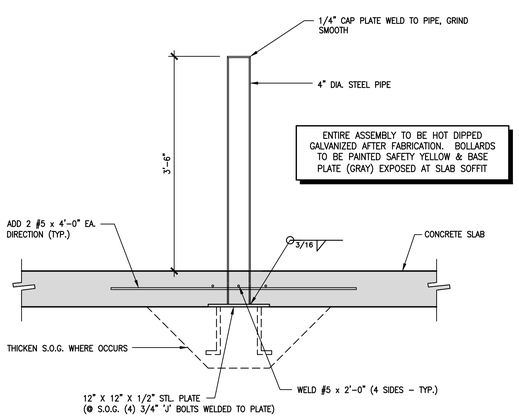

ENTIRE ASSEMBLY TO BE HOT DIPPED GALVANIZED AFTER FABRICATION. BOLLARDS TO BE PAINTED SAFETY YELLOW & BASE PLATE (GRAY) EXPOSED AT SLAB SOFFIT

3 / PA-8.3 BOLLARD DETAIL

SCALE: 1" = 1'-0"

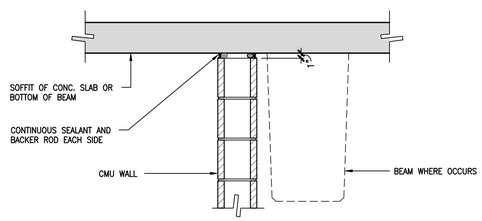

7 / PA-8.3 MASONRY WALL DETAIL

SCALE: 1" = 1'-0"

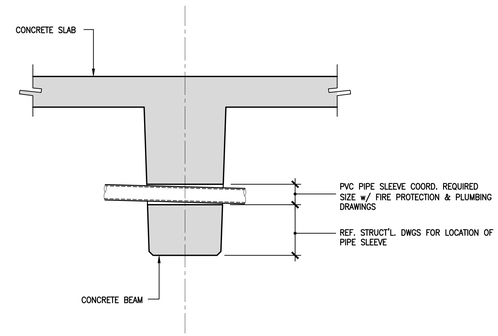

6 / PA-8.3 PIPE SLEEVE THROUGH BEAM

SCALE: 1" = 1'-0"

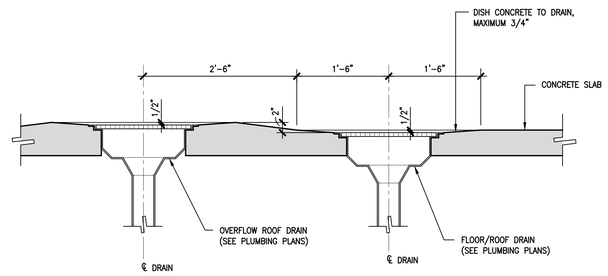

5 / PA-8.3 TRENCH DRAIN DETAIL

SCALE: 1" = 1'-0"

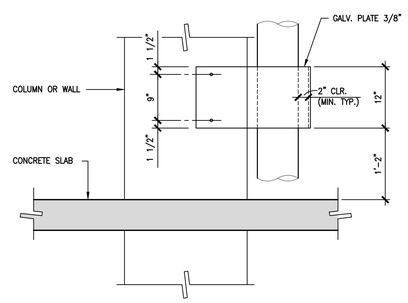

SIDE ELEVATION

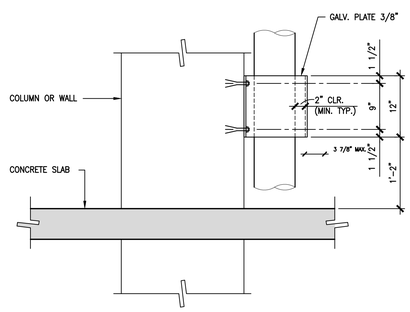

SIDE ELEVATION

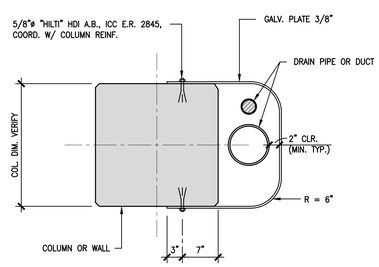

PLAN

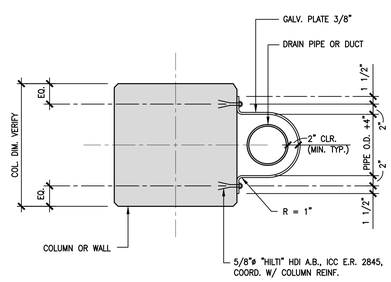

PLAN

2 / PA-8.3 TYPICAL PIPE/DUCT GUARDS

SCALE: 1" = 1'-0"

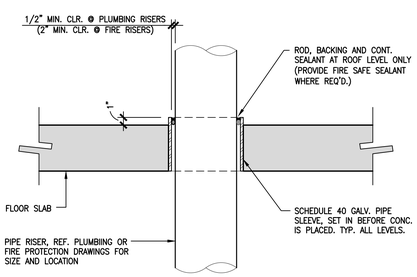

4 / PA-8.3 FLOOR DRAIN & OVERFLOW DRAIN

SCALE: 1" = 1'-0"

1 / PA-8.3 TYPICAL PIPE SLEEVE @ SLAB

SCALE: 1 1/2" = 1'-0"

Bayley Construction
3730 S. Susan St.
Suite 200
Santa Ana, CA, 92704
CA. License 734880
Tel 714-540-8863
Fax 714-556-8863

Bayley Construction
8005 S.E. 28th St.
P.O. Box 9004
Mercer Island, WA. 98040
WA. License BAYLEC034JC
Tel 206-621-8884
Fax 206-343-7728

BAYLEY CONSTRUCTION

Pacific Parking DESIGN
6 Venture, Suite 275 949.341.0066 t
Irvine, California 92618 949.341.0099 f

DLR Group WWCOT
Architecture Engineering Planning Interiors
4280 Latham Street, Suite H 951.682.0470 t
Riverside, California 92501 951.682.1801 f

LICENSED ARCHITECT SCOTT BRAYTON BERMAN C-22700 EXP. 9-30-13 STATE OF CALIFORNIA

Public Agency Submittal:
Issued for Bidding:
Issued for Construction:

Revisions:

A 09.15.2011 PERMIT SET

PHASE II: FOX ENTERTAINMENT PLAZA: PARKING GARAGE

3601 Market Street,
Riverside, CA 92501

CITY of RIVERSIDE

CITY OF RIVERSIDE

3900 Main Street, Riverside, CA 92522

Phase:
Revised
PPD Project № 10-101

TYPICAL DETAILS

Issued Date: 05.02.2011
Drawn By: RTR
Checked By: SBH

PA-8.3

Sheet №

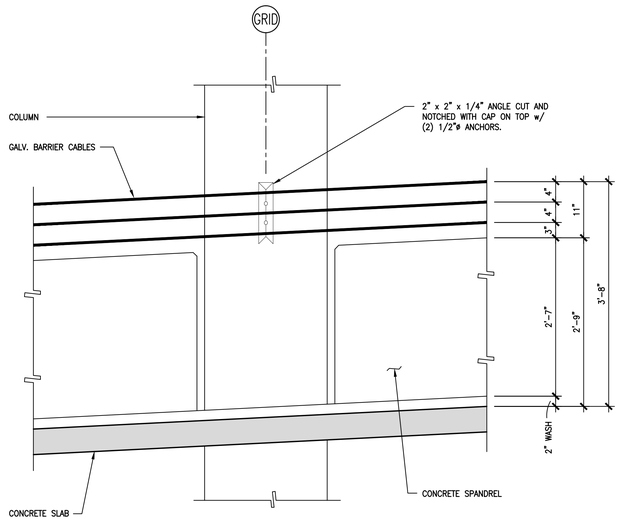

SEE 1/PA8.4 & 3/PA8.4 FOR ADD'L. INFORMATION

7 PA-8.4 TYPICAL RAMP EXTERIOR BARRIER CABLE DETAIL
SCALE: 1" = 1'-0"

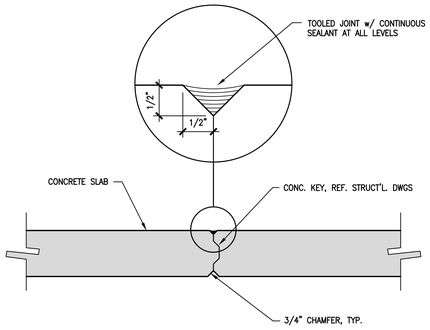

JOINT SHALL BE TOOLED NEATLY & BE GROUND UNIFORMLY AND STRAIGHT. CLEAN THE JOINT BEFORE CAULKING

6 PA-8.4 CONSTRUCTION JOINT DETAIL
SCALE: 1 1/2" = 1'-0"

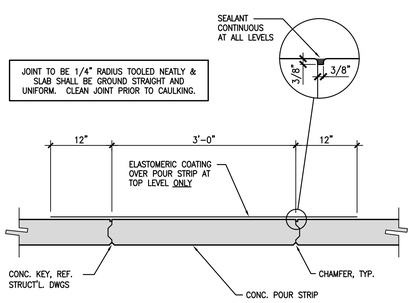

JOINT TO BE 1/4" RADIUS TOOLED NEATLY & SLAB SHALL BE GROUND STRAIGHT AND UNIFORM. CLEAN JOINT PRIOR TO CAULKING.

5 PA-8.4 CLOSURE STRIP DETAIL
SCALE: 1" = 1'-0"

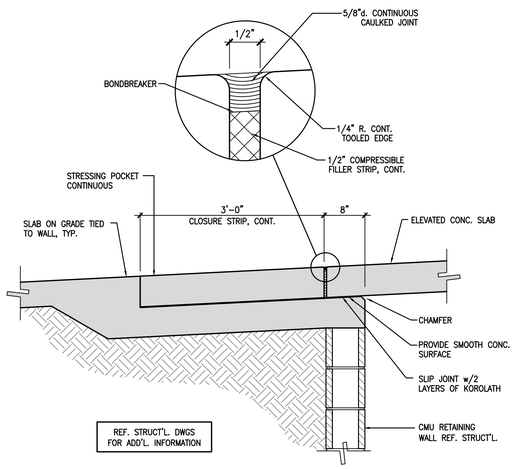

REF. STRUCT'L. DWGS FOR ADD'L. INFORMATION

4 PA-8.4 SEPARATION JOINT w/ POUR STRIP DETAIL
SCALE: 1" = 1'-0"

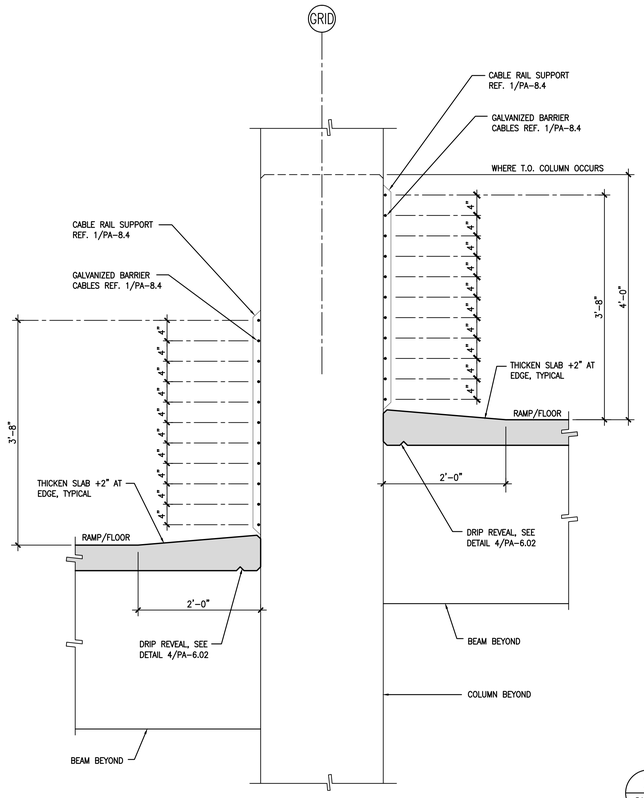

3 PA-8.4 TYPICAL INTERIOR RAMP BARRIER CABLE DETAIL
SCALE: 1" = 1'-0"

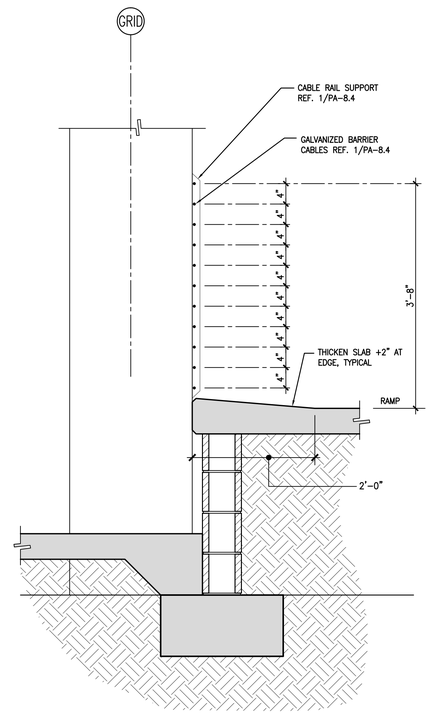

2 PA-8.4 TYPICAL INTERIOR RAMP BARRIER CABLE DETAIL
SCALE: 1" = 1'-0"

NOTES:

1. GALVANIZE COMPLETE ASSEMBLY AFTER FABRICATION.
2. LOCATE EMBEDS TO MISS COLUMN BARS.
3. THE BARRIER CABLES SHALL NOT DEFLECT TO ALLOW A 4" DIAMETER SPHERE TO PASS THROUGH THE RAIL.

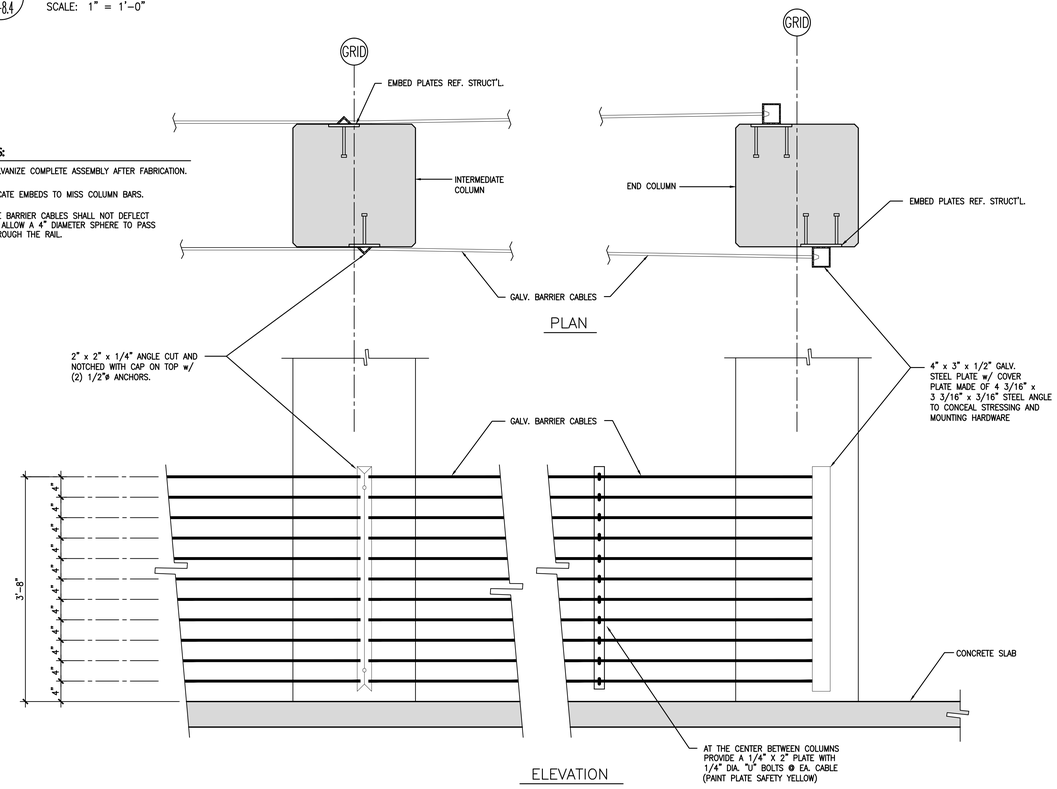

1 PA-8.4 TYPICAL RAMP INTERIOR BARRIER CABLE DETAIL
SCALE: 1" = 1'-0"

Bayley Construction
3730 S. Susan St.
Suite 200
Santa Ana, CA, 92704
CA. License 734880
Tel 714-540-8863
Fax 714-556-8863

Bayley Construction
8005 S.E. 28th St.
P.O. Box 9004
Mercer Island, WA. 98040
WA. License BAYLEC034JC
Tel 206-621-8884
Fax 206-343-7728

BAYLEY CONSTRUCTION

Pacific Parking DESIGN
6 Venture, Suite 275 949.341.0066 t
Irvine, California 92618 949.341.0099 f

DLR Group WWCOT
Architecture Engineering Planning Interiors
4280 Latham Street, Suite H 951.682.0470 t
Riverside, California 92501 951.682.1801 f

LICENSED ARCHITECT SCOTT BRAYTON SERAFIN C-22700 EXP. 9-30-13 STATE OF CALIFORNIA

Public Agency Submittal:
Issued for Bidding:
Issued for Construction:

Revisions:

A 09.15.2011 PERMIT SET

PHASE II:
FOX
ENTERTAINMENT
PLAZA:
PARKING GARAGE

3601 Market Street,
Riverside, CA 92501

CITY of RIVERSIDE

CITY OF RIVERSIDE

3900 Main Street, Riverside, CA 92522

Phase:
Revised
PPD Project № 10-101

TYPICAL DETAILS

Issued Date: 05.02.2011
Drawn By: RTR
Checked By: SBH

PA-8.4
Sheet №

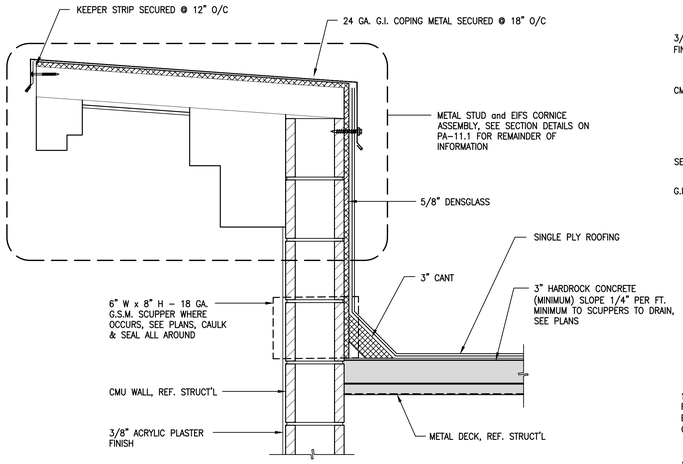

10 / PA-8.5 ROOF PARAPET & FLASHING DETAIL
SCALE: 3" = 1'-0"

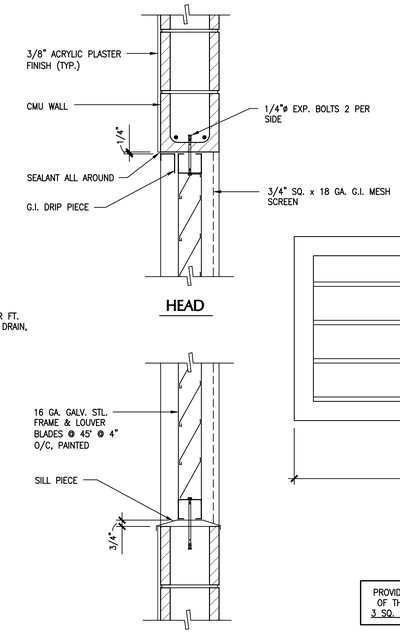

EXP. ANCHORS SHALL HAVE A 4" MIN. EMBED. INTO CMU WALL EXP.
ANCHORS – BY HILTI CONFORMING TO ICC E.R. 2845

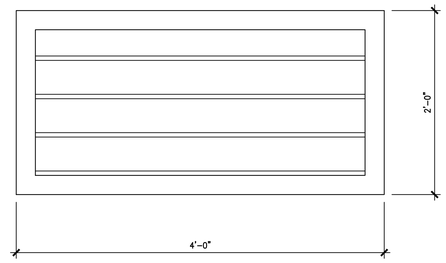

ELEVATION

SET BOTTOM OF FRAME AND SILL PIECE IN BED OF SEALANT TYP.

PROVIDE HOISTWAY VENTING TO EQUAL 3 1/2 PERCENT OF THE AREA OF THE HOISTWAY, WITH A MINIMUM OF 3 SQ. FT. PER ELEVATOR PROVIDED, CBC SECTION 3004

9 / PA-8.5 ELEVATOR SHAFT VENT
SCALE: 1 1/2" = 1'-0"

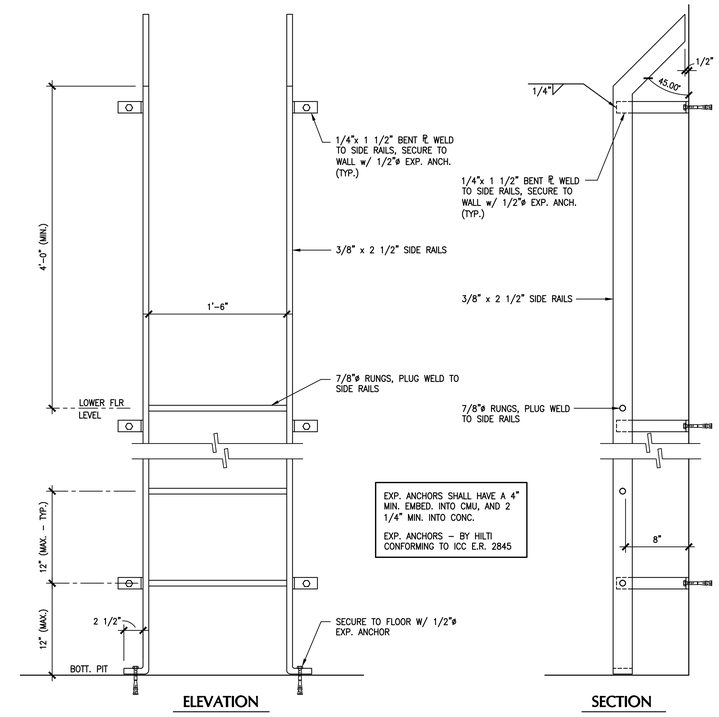

EXP. ANCHORS SHALL HAVE A 4" MIN. EMBED. INTO CMU, AND 2 1/4" MIN. INTO CONC.
EXP. ANCHORS – BY HILTI CONFORMING TO ICC E.R. 2845

8 / PA-8.5 ELEVATOR PIT LADDER
SCALE: 1 1/2" = 1'-0"

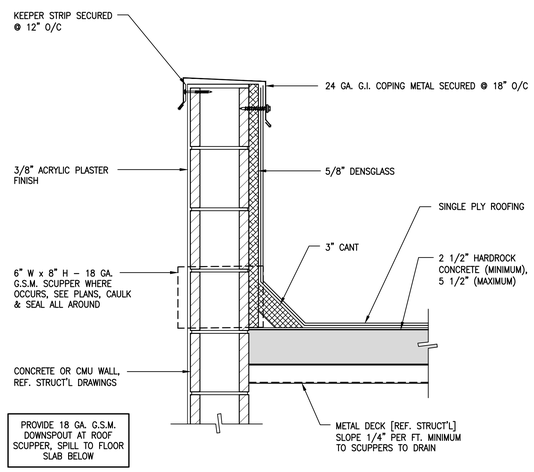

7 / PA-8.5 ROOF DETAIL at BLOCK WALLS
SCALE: 1 1/2" = 1'-0"

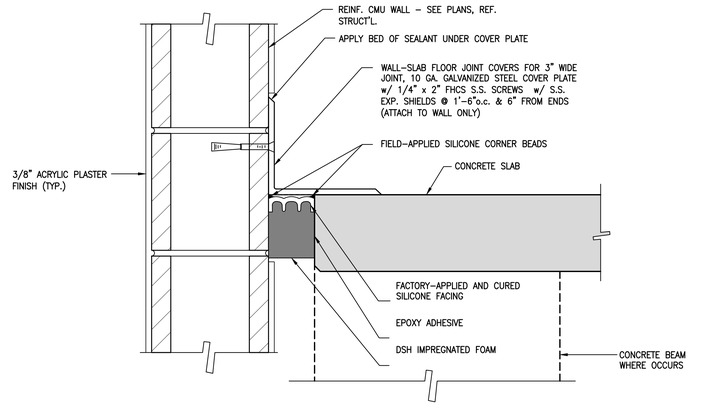

6 / PA-8.5 JOINT CONTROL at ELEVATOR WALL
SCALE: 3" = 1'-0"

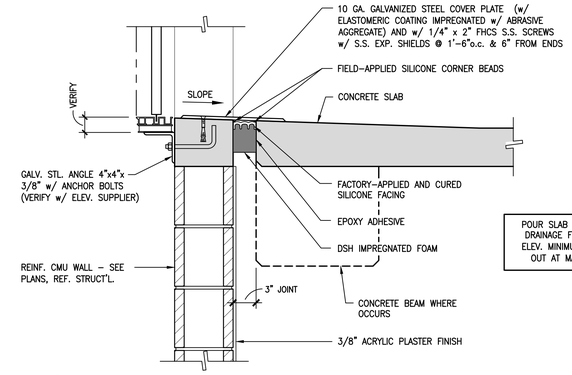

POUR SLAB TO PROVIDE FOR POSITIVE DRAINAGE FROM STAIR SILL SET SILL ELEV. MINIMUM 1" ABOVE SLAB SLOPE OUT AT MAXIMUM 1/4" PER FOOT

5 / PA-8.5 JOINT CONTROL at ELEVATOR SILL
SCALE: 1 1/2" = 1'-0"

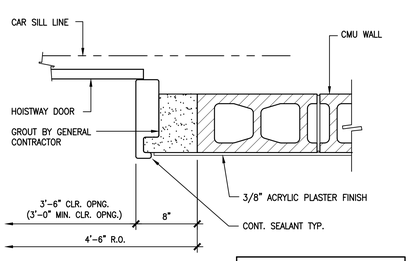

4 / PA-8.5 ELEVATOR JAMB DETAIL
SCALE: 1 1/2" = 1'-0"

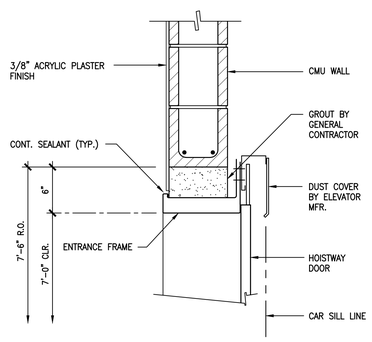

3 / PA-8.5 ELEVATOR HEAD DETAIL
SCALE: 1 1/2" = 1'-0"

EMERGENCY TELEPHONE SHALL BE LOCATED A MAXIMUM OF 48 INCHES FROM THE FLOOR WITH A MINIMUM CORD LENGTH OF 29 INCHES. MARKINGS OR THE INTERNATIONAL SYMBOL FOR TELEPHONES SHALL BE ADJACENT TO THE CONTROL ON A CONTRASTING COLOR BACKGROUND. LETTERS OR NUMBERS SHALL BE A MINIMUM OF 5/8 INCH HIGH AND RAISED OR RECESSED 0.030 INCH. PER ICC/ANSI A117.1

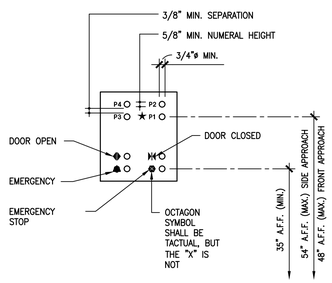

2 / PA-8.5 ELEVATOR CONTROL PANEL
SCALE: 1 1/2" = 1'-0"

EXCEPT AT THE MAIN ENTRANCE LEVEL, AN APPROVED PICTORIAL SIGN OF A STANDARDIZED DESIGN SHALL BE POSTED ADJACENT TO EACH ELEVATOR CALL STATION TO INDICATE THAT, "IN CASE OF FIRE, ELEVATOR WILL NOT OPERATE AND THAT EXIT STAIRWAYS SHOULD BE USED".

AT EACH ELEVATOR DESIGNATED FOR MEDICAL EMERGENCIES PROVIDE IDENTIFICATION AS FOLLOWS:

1. THE IDENTIFICATION SHALL BE THE INTERNATIONAL SYMBOL (STAR OF LIFE) FOR EMERGENCY MEDICAL SERVICES.
2. THE SYMBOL SHALL BE MINIMUM 3 INCHES IN SIZE.
3. THE SYMBOLS (TWO EACH SHALL BE PERMANENTLY ATTACHED TO THE HOISTWAY DOOR FRAME ON THAT PORTION AT RIGHT ANGLES TO THE HALLWAY OR LANDING AREA AT A DISTANCE NOT LESS THAN 6 FEET SIX INCHES AND NOT MORE THAN 7 FEET 0 INCHES ABOVE THE FLOOR LEVEL AT THE THRESHOLD.
4. ELEVATORS SHALL ACCOMMODATE AN "AMBULANCE" TYPE STRETCHER 24" X 84" IN THE HORIZONTAL POSITION.

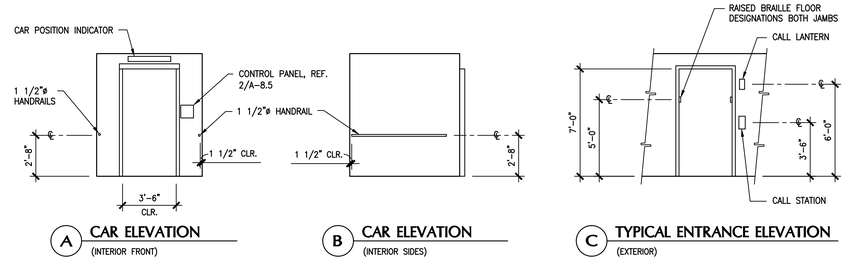

A CAR ELEVATION (INTERIOR FRONT)

B CAR ELEVATION (INTERIOR SIDES)

C TYPICAL ENTRANCE ELEVATION (EXTERIOR)

1 / PA-8.5 ELEVATOR CAB DETAILS
SCALE: 1/4" = 1'-0"

Bayley Construction
3730 S. Susan St.
Suite 200
Santa Ana, CA, 92704
CA. License 734880
Tel 714-540-8863
Fax 714-556-8863

Bayley Construction
8005 S.E. 28th St.
P.O. Box 9004
Mercer Island, WA. 98040
WA. License BAYLEC034JC
Tel 206-621-8884
Fax 206-343-7728

Pacific Parking DESIGN
6 Venture, Suite 275 949.341.0066 t
Irvine, California 92618 949.341.0099 f

DLR Group WWCOT
Architecture Engineering Planning Interiors
4280 Latham Street, Suite H 951.682.0470 t
Riverside, California 92501 951.682.1801 f

LICENSED ARCHITECT SCOTT BRAYTON SERAN C-22700 EXP. 9-30-13 STATE OF CALIFORNIA

Public Agency Submittal:
Issued for Bidding:
Issued for Construction:

Revisions:

09.15.2011 PERMIT SET

PHASE II:
FOX ENTERTAINMENT PLAZA:
PARKING GARAGE

3601 Market Street,
Riverside, CA 92501

CITY of RIVERSIDE

3900 Main Street, Riverside, CA 92522

Phase:
Revised
PPD Project № 10-101

TYPICAL HOISTWAY DETAILS

Issued Date: 05.02.2011
Drawn By: RTR
Checked By: SBH

PA-8.5
Sheet №

DOOR SCHEDULE

DOOR NO.	LEVEL	LOCATION	TYPE	DOOR MAT'L	DOOR SIZE	DOOR THICKNESS	FRAME MAT'L	FRAME DETAIL	FRAME JAMB	LOUVER	CLOSER	FIRE RATING (HOURS)	SILL	HARDWARE TYPE	WALL TYPE	REMARKS
PG-1	P-1	ELEVATOR MACHINE ROOM	A	H.M.	3'-0" X 7'-0"	1 3/4"	H.M.	5/PA-8.6	6/PA-8.6	NO	YES	1-HR.	-	LEVER/GROUP 2	8" CMU	DOOR AND FRAME SHALL BE MINIMUM 16 GAUGE STEEL / ALT. HEAD DETAIL 7/PA-8.6 / SEE DETAIL 2/PA-8.6 FOR HARDWARE MOUNTING
PG-2	P-1	ELECTRICAL ROOM	A	H.M.	3'-0" X 7'-0"	1 3/4"	H.M.	5/PA-8.6	6/PA-8.6	NO	YES	1-HR.	-	LEVER/GROUP 1	8" CMU	DOOR AND FRAME SHALL BE MINIMUM 16 GAUGE STEEL (PROVIDE PANIC HARDWARE PER CBC 1008.1.9) A / ALT. HEAD DETAIL 7/PA-8.6 / SEE DETAIL 2/PA-8.6 FOR HARDWARE MOUNTING
PG-3	P-1	ELECTRICAL ROOM	A	H.M.	3'-0" X 7'-0"	1 3/4"	H.M.	5/PA-8.6	6/PA-8.6	NO	YES	1-HR.	-	LEVER/GROUP 1	8" CMU	DOOR AND FRAME SHALL BE MINIMUM 16 GAUGE STEEL (PROVIDE PANIC HARDWARE PER CBC 1008.1.9) A / ALT. HEAD DETAIL 7/PA-8.6 / SEE DETAIL 2/PA-8.6 FOR HARDWARE MOUNTING
PG-4	P-1	RESTROOM	A	H.M.	3'-0" X 7'-0"	1 3/4"	H.M.	5/PA-8.6	6/PA-8.6	NO	YES	1-HR.	-	LEVER/GROUP 3	8" CMU	DOOR AND FRAME SHALL BE MINIMUM 16 GAUGE STEEL (PROVIDE DOOR IDENTIFICATION SYMBOLS PER CBC 1115B.6, SEE DETAIL 9/PA8.6) A / ALT. HEAD DETAIL 7/PA-8.6 / SEE DETAIL 2/PA-8.6 FOR HARDWARE MOUNTING
PG-5	P-1	TELEPHONE ROOM	A	H.M.	3'-0" X 7'-0"	1 3/4"	H.M.	5/PA-8.6	6/PA-8.6	NO	YES	1-HR.	-	LEVER/GROUP 4	12" CMU	DOOR AND FRAME SHALL BE MINIMUM 16 GAUGE STEEL / ALT. HEAD DETAIL 7/PA-8.6 / SEE DETAIL 2/PA-8.6 FOR HARDWARE MOUNTING
PG-6	P-1	SERVICE AREA	B	H.M.	PAIR 3'-0" X 7'-0"	1 3/4"	H.M.	5/PA-8.6	6/PA-8.6	NO	YES	1-HR.	-	LEVER/GROUP 4	8" CMU	DOOR AND FRAME SHALL BE MINIMUM 16 GAUGE STEEL / ALT. HEAD DETAIL 7/PA-8.6 / SEE DETAIL 2/PA-8.6 FOR HARDWARE MOUNTING
PG-7	P-1	SERVICE AREA	B	H.M.	PAIR 3'-0" X 7'-0"	1 3/4"	H.M.	5/PA-8.6	6/PA-8.6	NO	YES	1-HR.	-	LEVER/GROUP 4	8" CMU	DOOR AND FRAME SHALL BE MINIMUM 16 GAUGE STEEL / ALT. HEAD DETAIL 7/PA-8.6 / SEE DETAIL 2/PA-8.6 FOR HARDWARE MOUNTING
PG-8	P-1	STORAGE	C	H.M.	PAIR 3'-0" X 7'-0"	1 3/4"	H.M.	5/PA-8.6	6/PA-8.6	YES	YES	1-HR.	-	LEVER/GROUP 4	8" CMU	DOOR AND FRAME SHALL BE MINIMUM 16 GAUGE STEEL / ALT. HEAD DETAIL 7/PA-8.6 / SEE DETAIL 2/PA-8.6 FOR HARDWARE MOUNTING
PG-9	P-1	UTILITY ROOM	A	H.M.	3'-0" X 7'-0"	1 3/4"	H.M.	5/PA-8.6	6/PA-8.6	N/A	YES	1-HR.	-	LEVER/GROUP 4	8" CMU	DOOR AND FRAME SHALL BE MINIMUM 16 GAUGE STEEL / ALT. HEAD DETAIL 7/PA-8.6 / SEE DETAIL 2/PA-8.6 FOR HARDWARE MOUNTING
PG-10	P-4	UTILITY ROOM	A	H.M.	3'-0" X 7'-0"	1 3/4"	H.M.	5/PA-8.6	6/PA-8.6	N/A	YES	1-HR.	-	LEVER/GROUP 4	8" CMU	DOOR AND FRAME SHALL BE MINIMUM 16 GAUGE STEEL / ALT. HEAD DETAIL 7/PA-8.6 / SEE DETAIL 2/PA-8.6 FOR HARDWARE MOUNTING

8 PA-8.6 DOOR SCHEDULE
SCALE: NO SCALE

HARDWARE GROUPS

HARDWARE GROUP 1: ELECTRICAL ROOM

ITEM	CATALOG NO.	MANUFACTURER
LOCKSETS	SERIES L9465 P – RHODES LEVER TYPE	SCHLAGE
CYLINDERS	(KEYED BY OWNER)	SCHLAGE
CLOSER	4210H-CUSH PARALLEL ARM	LCN
BUTTS	1 1/2 PAIR, 4 1/4" X 4 1/2", FBB 179, NRP	STANLEY
THRESHOLD	NONE	
WALL STOP	#407 STAINLESS STEEL	IVES
DOOR SHOE	317 AN (AT IN SWINGING DOORS)	PEMKO
SILENCERS	THREE PER DOOR	
STRIKE GUARD	STAINLESS STEEL (FOR OUT SWINGING DOORS)	
FINISHES	630 SATIN STAINLESS STEEL FINISH, U.N.O.	
	(PROVIDE PANIC HARDWARE PER CBC 1008.1.9) A	

HARDWARE GROUP 2: ELEVATOR MACHINE ROOM

ITEM	CATALOG NO.	MANUFACTURER
LOCKSETS	SERIES L9480 P – RHODES LEVER TYPE	SCHLAGE
CYLINDERS	(KEYED BY OWNER)	
CLOSER	4210H-CUSH PARALLEL ARM	LCN
BUTTS	1 1/2 PAIR, 4 1/4" X 4 1/2", FBB 179, NRP	STANLEY
THRESHOLD	NONE	
WALL STOP	#407 STAINLESS STEEL	IVES
DOOR SHOE	317 AN (AT IN SWINGING DOORS)	PEMKO
SILENCERS	THREE PER DOOR	
STRIKE GUARD	STAINLESS STEEL (FOR OUT SWINGING DOORS)	
FINISHES	630 SATIN STAINLESS STEEL FINISH, U.N.O.	

HARDWARE GROUP 3: RESTROOM

ITEM	CATALOG NO.	MANUFACTURER
LOCKSETS	SERIES L9486 P – RHODES LEVER TYPE	SCHLAGE
CYLINDERS	(KEYED BY OWNER)	SCHLAGE
CLOSER	4210H-CUSH PARALLEL ARM	LCN
BUTTS	1 1/2 PAIR, 4 1/4" X 4 1/2", FBB 179, NRP	STANLEY
THRESHOLD	MARBLE	
WALL STOP	#407 STAINLESS STEEL	IVES
DOOR SHOE	317 AN (AT IN SWINGING DOORS)	PEMKO
SILENCERS	THREE PER DOOR	
STRIKE GUARD	STAINLESS STEEL (FOR OUT SWINGING DOORS)	
FINISHES	630 SATIN STAINLESS STEEL FINISH, U.N.O.	

HARDWARE GROUP 4: STORAGE & TELEPHONE ROOM

ITEM	CATALOG NO.	MANUFACTURER
LOCKSETS	SERIES L9465 P – RHODES LEVER TYPE	SCHLAGE
CYLINDERS	(KEYED BY OWNER)	
CLOSER	4210H-CUSH PARALLEL ARM	LCN
BUTTS	1 1/2 PAIR, 4 1/4" X 4 1/2", FBB 179, NRP	STANLEY
THRESHOLD	1715A	PEMKO
WALL STOP	#407 STAINLESS STEEL	IVES
DOOR SHOE	317 AN (AT IN SWINGING DOORS)	PEMKO
SILENCERS	THREE PER DOOR	
STRIKE GUARD	STAINLESS STEEL (FOR OUT SWINGING DOORS)	
FINISHES	630 SATIN STAINLESS STEEL FINISH, U.N.O.	

4 PA-8.6 HARDWARE SCHEDULE
SCALE: NO SCALE

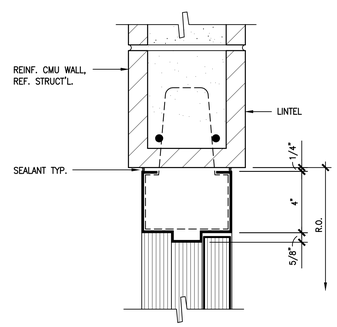

SECTION

7 PA-8.6 ALTERNATE DOOR HEAD
SCALE: 3" = 1'-0"

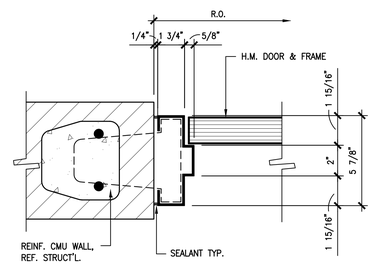

PLAN

6 PA-8.6 H.M. DOOR JAMB
SCALE: 3" = 1'-0"

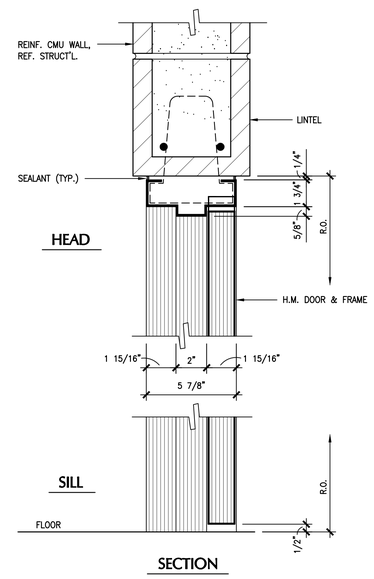

SECTION

5 PA-8.6 H.M. DOOR DETAILS
SCALE: 3" = 1'-0"

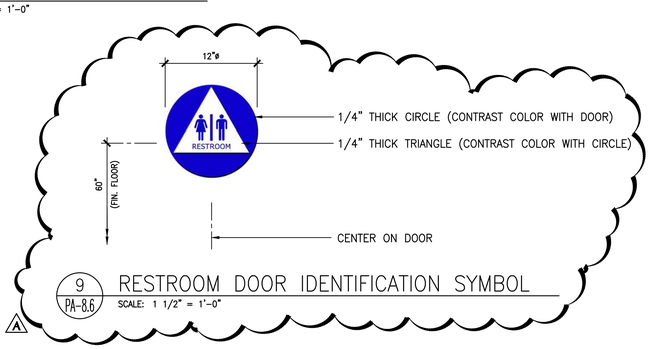

9 PA-8.6 RESTROOM DOOR IDENTIFICATION SYMBOL
SCALE: 1 1/2" = 1'-0"

A

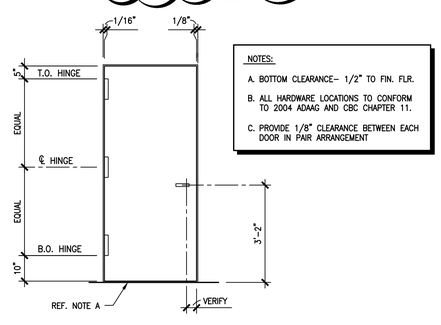

NOTES:
A. BOTTOM CLEARANCE– 1/2" TO FIN. FLR.
B. ALL HARDWARE LOCATIONS TO CONFORM TO 2004 ADAAG AND CBC CHAPTER 11.
C. PROVIDE 1/8" CLEARANCE BETWEEN EACH DOOR IN PAIR ARRANGEMENT

HARDWARE
(FLUSH METAL)

2 PA-8.6 DOOR HARDWARE MOUNTING
SCALE: 1/2" =1 '-0"

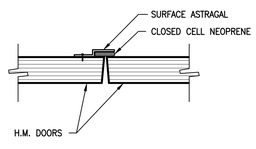

3 PA-8.6 DOOR ASTRAGAL
SCALE: 3" = 1'-0"

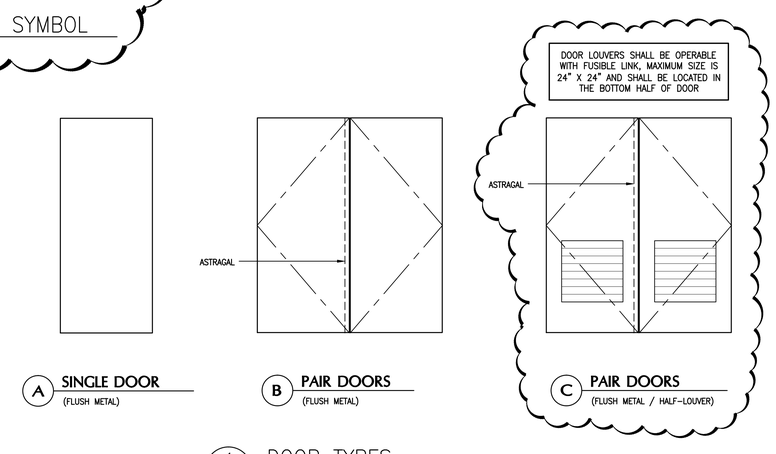

A SINGLE DOOR (FLUSH METAL)
B PAIR DOORS (FLUSH METAL)
C PAIR DOORS (FLUSH METAL / HALF-LOUVER)

1 PA-8.6 DOOR TYPES
SCALE: 1/2" =1 '-0"

Bayley Construction
3730 S. Susan St.
Suite 200
Santa Ana, CA, 92704
CA. License 734880
Tel 714-540-8863
Fax 714-556-8863

Bayley Construction
8005 S.E. 28th St.
P.O. Box 9004
Mercer Island, WA. 98040
WA. License BAYLECO34JC
Tel 206-621-8884
Fax 206-343-7728

Pacific Parking DESIGN
6 Venture, Suite 275 949.341.0066 t
Irvine, California 92618 949.341.0099 f

DLR Group WWCOT
Architecture Engineering Planning Interiors
4280 Latham Street, Suite H 951.682.0470 t
Riverside, California 92501 951.682.1801 f

LICENSED ARCHITECT SCOTT BRAYTON BERMAN C-22700 EXP. 9-30-13 STATE OF CALIFORNIA

Public Agency Submittal:
Issued for Bidding:
Issued for Construction:

Revisions:

A 09.15.2011 PERMIT SET

PHASE II:
FOX ENTERTAINMENT PLAZA:
PARKING GARAGE

3601 Market Street,
Riverside, CA 92501

CITY of RIVERSIDE

3900 Main Street, Riverside, CA 92522

Phase:
Revised
PPD Project № 10-101

DOOR SCHEDULE and DETAILS

Issued Date: 05.02.2011
Drawn By: RTR
Checked By: SBH

PA-8.6
Sheet №

GATE and GRILLE SCHEDULE

GATE/ GRILLE NO.	LEVEL	LOCATION	DETAIL	DOOR MAT'L	DOOR GATE/GRILLE SIZE (WxH)	CLOSER	REMARKS
PG-A	P-1	PEDESTRIAN ACCESS (LINE C)	1A/PA-8.7	METAL	GATE 3'-0" W X 7'-0" H	YES	(PROVIDE PANIC HARDWARE PER CBC 1008.1.9)
PG-B	P-1	PEDESTRIAN ACCESS (LINE C)	2/PA-8.7	METAL	GRILLE 6'-0" W X 8'-8" H	NO	
PG-C	P-1	VEHICLE ENTRY LANE (LINE 1)	2/PA-8.7	METAL	GRILLE 13'-3" W X 16'-6" H	NO	
PG-D	P-1	VEHICLE EXIT LANES (LINE 1)	2/PA-8.7	METAL	GRILLE 27'-0" W X 16'-6" H	NO	
PG-E	P-1	STAIR #2	1A/PA-8.7	METAL	GATE 3'-0" W X 7'-0" H	YES	(PROVIDE PANIC HARDWARE PER CBC 1008.1.9)
PG-F	P-1	SERVICE AREA	1B/PA-8.7	METAL	GATE 3'-0" W X 7'-0" H	YES	
PG-G	P-1	SERVICE AREA	3/PA-8.7	METAL	SLIDING GATE 8'-0" W X 8'-0" H	NO	

4 / PA-8.7 GATE and GRILLE SCHEDULE
SCALE: NO SCALE

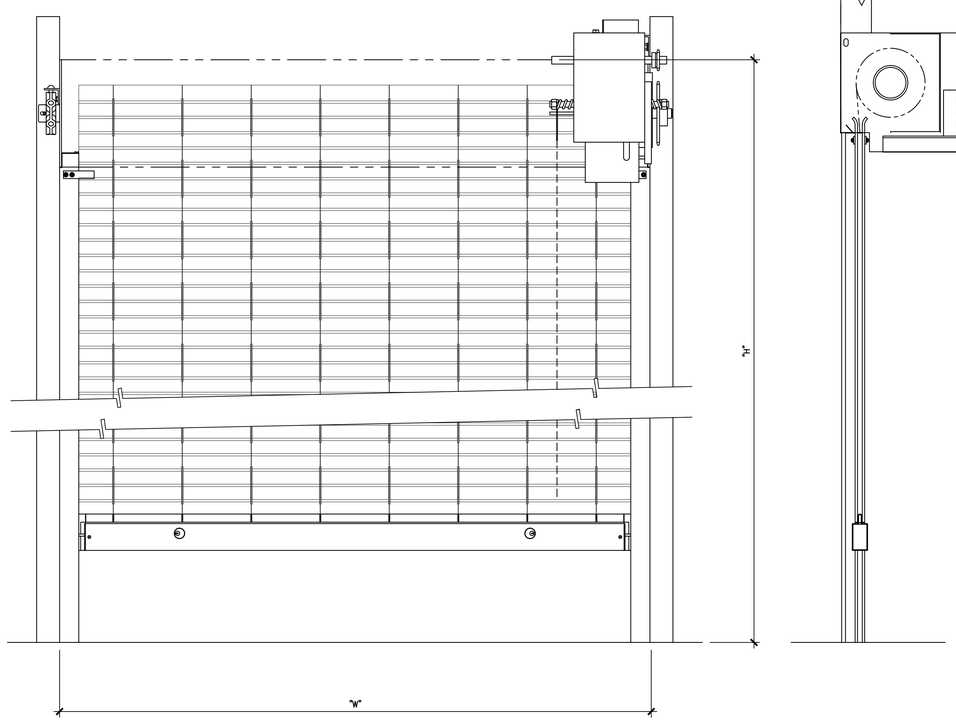

ELEVATION - COIL SIDE

SECTION

2 / PA-8.7 ROLL-DOWN SECURITY GRILLE DETAILS
SCALE: NO SCALE

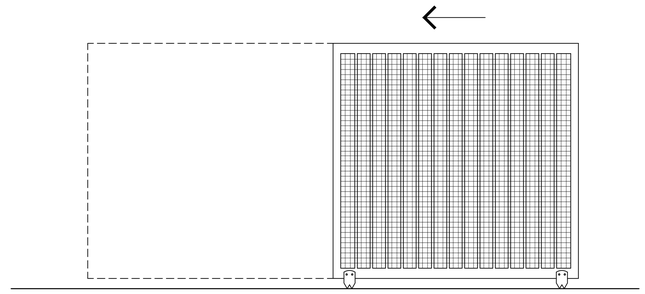

INTERIOR SIDE

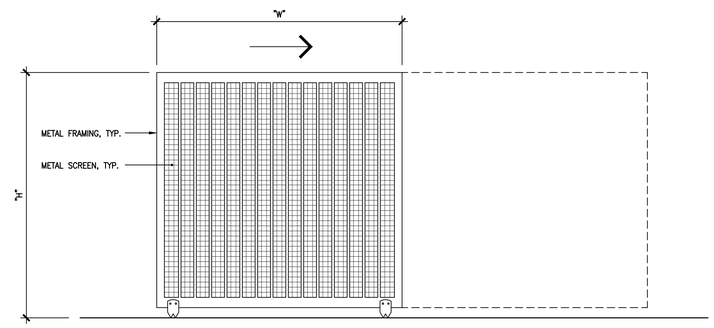

EXTERIOR SIDE

3 / PA-8.7 SLIDING GATE DETAILS
SCALE: 1/2" =1 '-0"

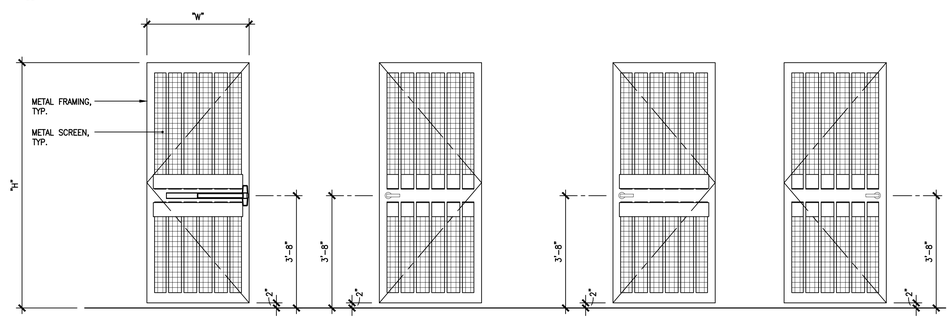

INTERIOR SIDE | EXTERIOR SIDE | INTERIOR SIDE | EXTERIOR SIDE

A SINGLE GATE (with PANIC HARDWARE)

B SINGLE GATE (without PANIC HARDWARE)

1 / PA-8.7 PEDESTRIAN GATE DETAILS
SCALE: 1/2" =1 '-0"

BAYLEY CONSTRUCTION

Bayley Construction
3730 S. Susan St.
Suite 200
Santa Ana, CA, 92704
CA. License 734880
Tel 714-540-8863
Fax 714-556-8863

Bayley Construction
8005 S.E. 28th St.
P.O. Box 9004
Mercer Island, WA. 98040
WA. License BAYLEC034JC
Tel 206-621-8884
Fax 206-343-7728

Pacific Parking DESIGN
6 Venture, Suite 275 949.341.0066 t
Irvine, California 92618 949.341.0099 f

DLR Group WWCOT
Architecture Engineering Planning Interiors
4280 Latham Street, Suite H 951.682.0470 t
Riverside, California 92501 951.682.1801 f

LICENSED ARCHITECT SCOTT BRAYTON NEMAN C-22700 EXP. 9-30-13 STATE OF CALIFORNIA

Public Agency Submittal:
Issued for Bidding:
Issued for Construction:

Revisions:

A 09.15.2011 PERMIT SET

PHASE II:
FOX
ENTERTAINMENT
PLAZA:
PARKING GARAGE

3601 Market Street,
Riverside, CA 92501

CITY of RIVERSIDE

CITY OF RIVERSIDE

3900 Main Street, Riverside, CA 92522

Phase:
Revised
PPD Project № 10-101

ROLL-DOWN GRILLE and GATE SCHEDULE and DETAILS

Issued Date: 05.02.2011
Drawn By: RTR
Checked By: SBH

PA-8.7 A
Sheet №

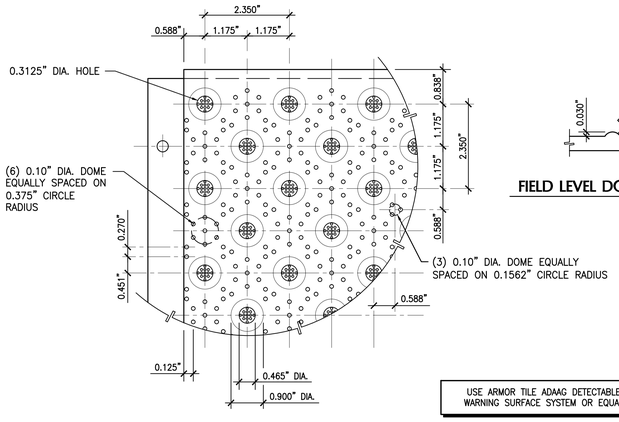

TACTILE TILE DETAIL A

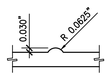

FIELD LEVEL DOME DETAIL

USE ARMOR TILE ADAAG DETECTABLE WARNING SURFACE SYSTEM OR EQUAL

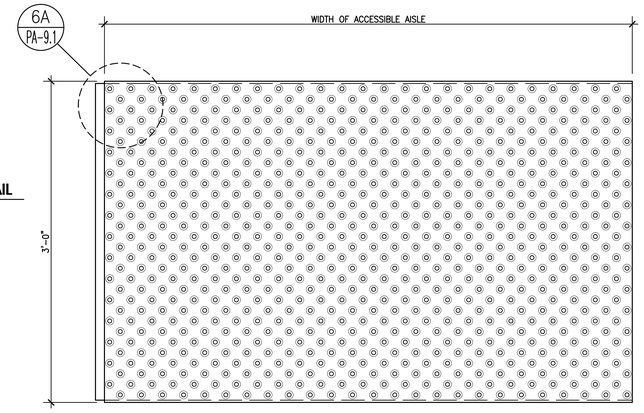

TACTILE TILE PLAN

6 PA-9.1 DETECTABLE WARNING DETAIL

SCALE: NTS

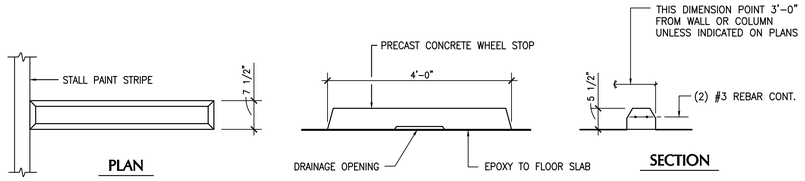

4 PA-9.1 CONCRETE WHEELSTOP

SCALE: 3/4" = 1'-0"

ACCESSIBLE PARKING NOTES

1. THE MINIMUM LENGTH OF AN ACCESSIBLE PARKING SPACE SHALL BE 18'-0".
2. ONE IN EVERY EIGHT ACCESSIBLE SPACES, BUT NOT LESS THAN ONE, SHALL BE SERVED BY AN ACCESS AISLE 96" WIDE MINIMUM PLACED ON THE SIDE OPPOSITE THE DRIVER'S SIDE WHEN THE VEHICLE IS GOING FORWARD INTO THE PARKING SPACE AND SHALL BE DESIGNATED "VAN ACCESSIBLE". ALL SUCH SPACES MAY BE GROUPED ON ONE LEVEL OF A PARKING STRUCTURE.
3. SURFACE SLOPES OF ACCESSIBLE PARKING SPACES SHALL BE THE MINIMUM POSSIBLE AND SHALL NOT EXCEED 1 UNIT VERTICAL TO 50 UNITS HORIZONTAL IN ANY DIRECTION. THIS SHALL APPLY TO THE LOADING AISLES AS WELL.
4. ALL ENTRANCES TO AND EXITS FROM A BUILDING AND VERTICAL CLEARANCES WITHIN PARKING STRUCTURES SHALL HAVE A MINIMUM VERTICAL CLEARANCE OF 8'-2" TO ANY BEAM, CEILING, PIPE ETC., WHERE REQUIRED FOR ACCESSIBILITY TO ACCESSIBLE PARKING SPACES.
5. IN EACH PARKING AREA, A BUMPER OR CURB SHALL BE PROVIDED AND LOCATED TO PREVENT ENCROACHMENT OF CARS OVER THE REQUIRED WIDTH OF WALKWAYS.
6. PEDESTRIAN WAYS WHICH ARE ACCESSIBLE TO PEOPLE WITH DISABILITIES SHALL BE PROVIDED FROM EACH ACCESSIBLE PARKING SPACE TO RELATED FACILITIES, INCLUDING CURB CUTS OR RAMPS AS NEEDED.
7. ACCESSIBLE PARKING SPACES SHALL BE LOCATED SO THAT PERSONS WITH DISABILITIES ARE NOT COMPELLED TO WHEEL OR WALK BEHIND PARKED CARS OTHER THAN THEIR OWN. RAMP SHALL NOT ENCROACH INTO ANY ACCESSIBLE PARKING SPACE OR THE ADJACENT ACCESS AISLE. THE MAXIMUM CROSS SLOPE IN ANY DIRECTION FOR BOTH PARKING SPACE AND ACCESS AISLE SHALL NOT EXCEED 2% SLOPE.
8. CURB RAMPS SHALL NOT ENCROACH INTO ANY PARKING SPACE, WITH THE EXCEPTION OF A TRANSITION RAMP FROM A LOADING/UNLOADING AREA TO AN ADJACENT WALK/SIDEWALK. THE TRANSITION RAMP SHALL BE A MINIMUM OF 48" IN WIDTH, A MAXIMUM OF 60" IN LENGTH, WITH A MAXIMUM SLOPE OF 1:12 AND WITH FLARED SIDE SLOPES OF 1 VERTICAL TO 10 HORIZONTAL MAXIMUM.
9. EACH PARKING SPACE RESERVED FOR PERSONS WITH DISABILITIES SHALL BE IDENTIFIED BY A REFLECTORIZED SIGN PERMANENTLY POSTED IMMEDIATELY ADJACENT TO AND VISIBLE FROM EACH STALL OR SPACE, CONSISTING OF A PROFILE VIEW OF A WHEELCHAIR WITH OCCUPANT IN WHITE ON DARK BLUE BACKGROUND. THE SIGN SHALL NOT BE SMALLER THAN 70 SQUARE INCHES IN AREA AND, WHEN IN A PATH OF TRAVEL, SHALL BE POSTED AT A MINIMUM HEIGHT OF 80" FROM THE BOTTOM OF THE SIGN TO THE PARKING SPACE FINISHED GRADE.
10. SIGNS TO IDENTIFY ACCESSIBLE PARKING SPACES MAY ALSO BE CENTERED ON A WALL AT THE INTERIOR END OF THE PARKING SPACE AT A MINIMUM HEIGHT OF 36" FROM THE PARKING SPACE FINISHED GRADE, GROUND OR SIDEWALK.
11. VAN ACCESSIBLE PARKING SPACES SHALL HAVE AN ADDITIONAL SIGN STATING "VAN ACCESSIBLE" MOUNTED BELOW THE SYMBOL OF ACCESSIBILITY AND POSTED AT A MINIMUM HEIGHT OF 80" FROM THE BOTTOM OF THE SIGN TO THE PARKING SPACE FINISHED GRADE.
12. AN ADDITIONAL SIGN SHALL ALSO BE POSTED IN A CONSPICUOUS PLACE AT EACH ENTRANCE TO OFF-STREET PARKING FACILITIES, OR IMMEDIATELY ADJACENT TO AND VISIBLE FROM EACH STALL OR SPACE. THE SIGN SHALL BE NOT LESS THAN 17" BY 22" IN SIZE WITH LETTERING NOT LESS THAN 1" IN HEIGHT, WHICH CLEARLY AND CONSPICUOUSLY STATES THE FOLLOWING:

   A "UNAUTHORIZED VEHICLES PARKED IN DESIGNATED ACCESSIBLE SPACES NOT DISPLAYING DISTINGUISHED PLACARDS OR LICENSE PLATES ISSUED FOR PERSONS WITH DISABILITIES MAY BE TOWED AWAY AT OWNER'S EXPENSE. TOWED VEHICLES MAY BE RECLAIMED AT THE CITY OF RIVERSIDE POLICE DEPARTMENT OR BY TELEPHONING (951) 787-7911."

   NOTE: BLANK SPACES ARE TO BE FILLED IN WITH APPROPRIATE INFORMATION AS A PERMANENT PART OF THE SIGN.
13. THE SURFACE OF EACH ACCESSIBLE PARKING SPACE OR STALL SHALL HAVE A SURFACE IDENTIFICATION DUPLICATING EITHER EITHER OF THE FOLLOWING SCHEMES:
    A. BY OUTLINING OR PAINTING THE STALL OR SPACE IN BLUE AND OUTLINING ON THE GROUND IN THE STALL OR SPACE IN WHITE OR SUITABLE CONTRASTING COLOR A PROFILE VIEW DEPICTING A WHEELCHAIR WITH OCCUPANT; OR
    B. BY OUTLINING A PROFILE VIEW OF A WHEELCHAIR WITH OCCUPANT IN WHITE ON BLUE BACKGROUND. THE PROFILE VIEW SHALL BE LOCATED SO THAT IT IS VISIBLE TO A TRAFFIC ENFORCEMENT OFFICER WHEN A VEHICLE IS PROPERLY PARKED IN THE SPACE AND SHALL BE 36" HIGH BY 36" WIDE.
14. WHERE SINGLE ACCESSIBLE PARKING SPACES ARE PROVIDED, THEY SHALL BE 14' WIDE AND OUTLINED TO PROVIDE A 9' PARKING AREA AND A 5' LOADING AND UNLOADING ACCESS AISLE ON THE PASSENGER SIDE OF THE VEHICLE. THE WORDS "NO PARKING" SHALL BE PAINTED ON THE GROUND WITHIN EACH FIVE-FOOT (AND EIGHT-FOOT) LOADING AND UNLOADING ACCESS AISLES. THIS NOTICE SHALL BE PAINTED IN WHITE LETTERS NOT LESS THAN 12" INCHES HIGH AND LOCATED SO THAT IT IS VISIBLE TO TRAFFIC ENFORCEMENT OFFICIALS.
15. WHERE MORE THAN ONE ACCESSIBLE PARKING SPACE IS PROVIDED, IN LIEU OF PROVIDING A 14' WIDE SPACE FOR EACH PARKING SPACE, TWO SPACES CAN BE PROVIDED WITHIN A 23' WIDE AREA LINED TO PROVIDE A 9' PARKING AREA ON EACH SIDE OF A 5' LOADING AND UNLOADING ACCESS AISLE IN THE CENTER. THE WORDS "NO PARKING" SHALL BE PAINTED ON THE GROUND WITHIN EACH FIVE-FOOT (AND EIGHT-FOOT) LOADING AND UNLOADING ACCESS AISLES. THIS NOTICE SHALL BE PAINTED IN WHITE LETTERS NOT LESS THAN 12" INCHES HIGH AND LOCATED SO THAT IT IS VISIBLE TO TRAFFIC ENFORCEMENT OFFICIALS.
16. IN PARKING FACILITIES THAT DO NOT SERVE A PARTICULAR BUILDING, ACCESSIBLE PARKING SHALL BE LOCATED ON THE SHORTEST ACCESSIBLE ROUTE OF TRAVEL TO AN ACCESSIBLE PEDESTRIAN ENTRANCE OF THE PARKING FACILITY.

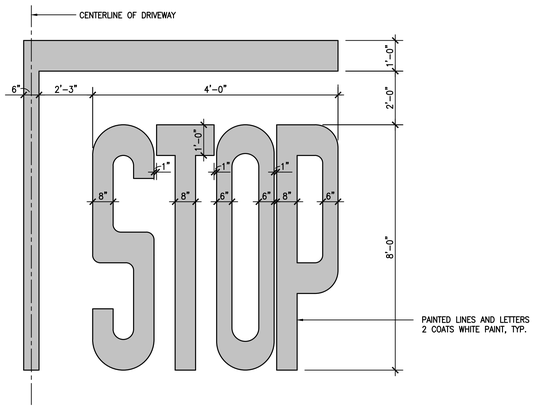

7 PA-9.1 PAINTED STOP SIGN

SCALE: 1/2" = 1'-0"

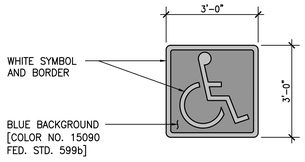

SURFACE PAINTED SYMBOL

5 PA-9.1 TYPICAL ACCESSIBLE SYMBOL

SCALE: 1/2" = 1'-0"

AT THE ENTRANCES TO THE PARKING STRUCTURE PROVIDE SIGNS THAT STATE THE FOLLOWING INFORMATION REGARDING COMPACT PARKING SPACES

(i) COMPACT CARS ARE TO BE PARKED IN COMPACT STALLS WHEN AVAILABLE

(ii) STANDARD-SIZE CARS SHALL NOT BE PARKED IN "COMPACT ONLY" STALLS

(iii) PROBLEMS CONCERNING PARKING SHOULD BE REPORTED TO THE PROPERTY OWNER OR A DESIGNATED REPRESENTATIVE

(iv) THE PHONE NUMBER OF THE PROPERTY OWNER OR A DESIGNATED REPRESENTATIVE

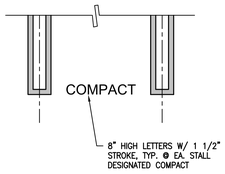

1A A-9.1 TYPICAL COMPACT MARKING

SCALE: 1/4" = 1'-0"

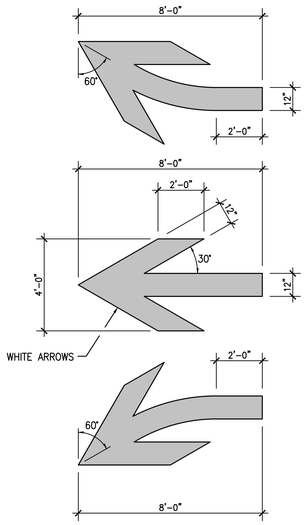

3 PA-9.1 TRAFFIC ARROWS

SCALE: 1/2" = 1'-0"

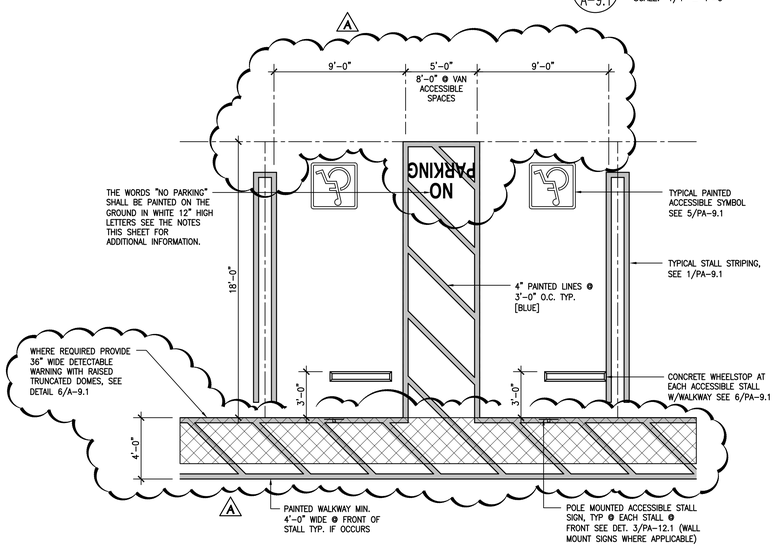

2 PA-9.1 TYP. ACCESSIBLE STALL STRIPING

SCALE: 1/4" = 1'-0"

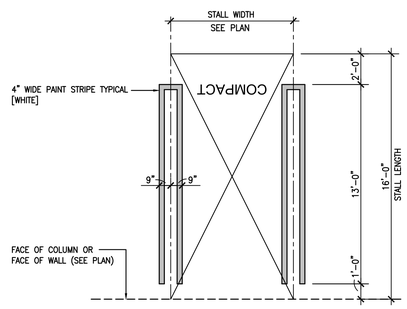

90° COMPACT

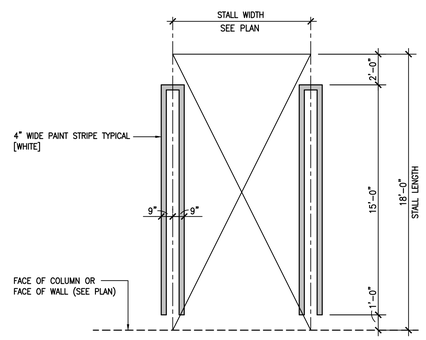

90° STANDARD

1 PA-9.1 TYPICAL STALL STRIPING

SCALE: 1/4" = 1'-0"

Bayley Construction
3730 S. Susan St.
Suite 200
Santa Ana, CA, 92704
CA. License 734880
Tel 714-540-8863
Fax 714-556-8863

Bayley Construction
8005 S.E. 28th St.
P.O. Box 9004
Mercer Island, WA. 98040
WA. License BAYLECO34JC
Tel 206-621-8884
Fax 206-343-7728

Pacific Parking DESIGN
6 Venture, Suite 275 949.341.0066 t
Irvine, California 92618 949.341.0099 f

DLR Group WWCOT
Architecture Engineering Planning Interiors
4280 Latham Street, Suite H 951.682.0470 t
Riverside, California 92501 951.682.1801 f

LICENSED ARCHITECT SCOTT BRAYTON NEWLAND C-22700 EXP. 9-30-13 STATE OF CALIFORNIA

Public Agency Submittal:
Issued for Bidding:
Issued for Construction:

Revisions:

A 09.15.2011 PERMIT SET

PHASE II:
FOX ENTERTAINMENT PLAZA:
PARKING GARAGE

3601 Market Street,
Riverside, CA 92501

CITY of RIVERSIDE

CITY OF RIVERSIDE

3900 Main Street, Riverside, CA 92522

Phase:
Revised
PPD Project № 10-101

TYPICAL STRIPING DETAILS

Issued Date: 05.02.2011
Drawn By: RTR
Checked By: SBH

PA-9.1

Sheet №

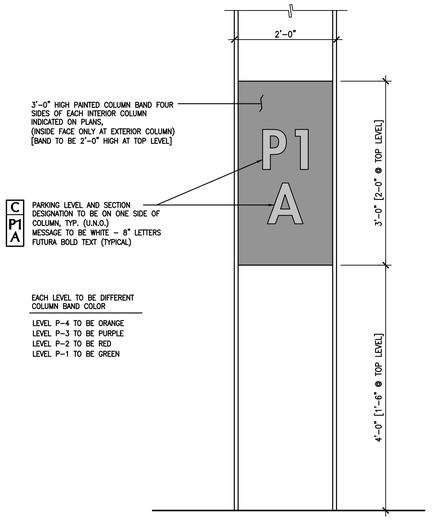

7 PA-10.01 STENCIL PAINTED COLUMN SIGNS

SCALE: N.T.S.

BUILDING ADDRESS NUMBERS SHALL BE PLAINLY VISIBLE AND LEGIBLE FROM THE STREET OR ROAD FRONTING THE BUILDING. ADDRESS NUMBERS SHALL BE ARABIC NUMBERS OR ALPHABETICAL LETTERS. ADDRESS NUMBERS SHALL HAVE A MINIMUM 1-INCH STROKE AND SHALL BE 6 INCHES IN HEIGHT IF <50 FEET FROM STREET, 8 INCHES IF <100 FEET, 10 INCHES IF <150 FEET AND 12 INCHES IF >150 FEET. IN ADDITION, ADDRESS NUMBERS SHALL CONTRAST WITH THEIR BACKGROUND AND SHALL BE EITHER EXTERNALLY OR INTERNALLY ILLUMINATED SO THEY ARE VISIBLE FROM THE STREET OR ROAD FRONTING THE BUILDING, ESPECIALLY AT NIGHT. WHEN THE FRONT OF THE BUILDING DOES NOT FACE THE STREET FROM WHICH IT IS ADDRESSED, THE SIDES OF THE BUILDING FACING SAID STREET SHALL ALSO HAVE COMPLYING NUMBERS.

WHERE ACCESS IS BY MEANS OF A PRIVATE ROAD AND THE BUILDING CANNOT BE VIEWED FROM THE PUBLIC WAY, A MONUMENT, POLE OR OTHER SIGN OR MEANS SHALL BE USED TO IDENTIFY THE STRUCTURE.

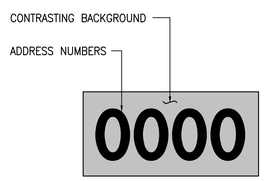

6 PA-10.01 TYPICAL ADDRESS SIGN DETAILING

SCALE: N.T.S.

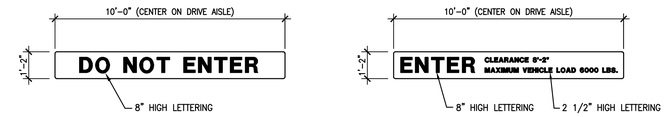

8 PA-10.01 DIRECTIONAL SIGN MESSAGES FOR BARRIER BEAMS

SCALE: 3/8" = 1'-0"

5 PA-10.01 TYPICAL SIGN DETAILING

SCALE: N.T.S.

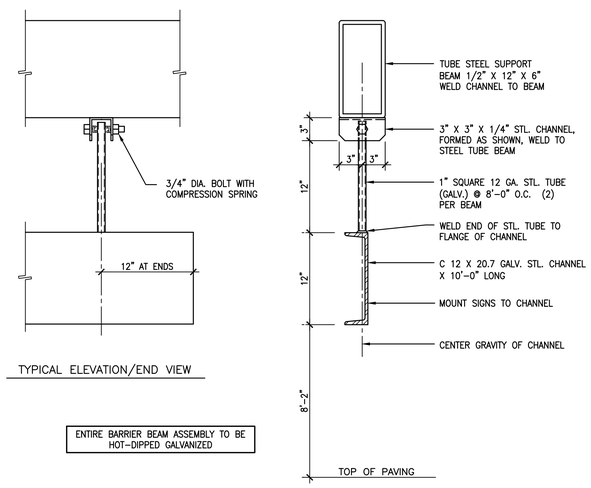

ENTIRE BARRIER BEAM ASSEMBLY TO BE HOT-DIPPED GALVANIZED

ASSEMBLY LOCATED AT LEVEL P-1, GRID LINE C, BETWEEN LINES 2 & 4

4 PA-10.01 BARRIER BEAM at ENTRY/EXIT

SCALE: 1 1/2" = 1'-0"

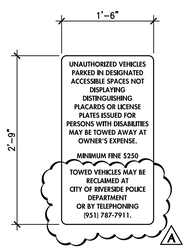

METAL PLATE SIGN SURFACE MOUNTED AT VEHICULAR ENTRANCE

LETTERING SHALL NOT BE LESS THAN 1" IN HEIGHT

3 PA-10.01 DISABLED STALL SIGNS

SCALE: 1" = 1'-0"

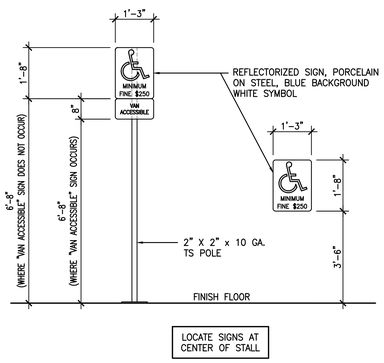

2 PA-10.01 DISABLED STALL SIGNS

SCALE: 1/2" = 1'-0"

PROVIDE THE FOLLOWING SIGNS FOR THE PROJECT: (NOT SHOWN ON PLANS)

1. AT EACH ELEVATOR LANDING PROVIDE A SIGN WITH VERBAL AS WELL AS GRAPHIC SYMBOLIZATION THAT STATES:

   "IN CASE OF FIRE – DO NOT USE ELEVATORS – USE STAIRS"

2. AT ELEVATOR MACHINE ROOM PROVIDE SIGNAGE STATING: "ELEVATOR MACHINE ROOM"
3. AT ELECTRICAL ROOM PROVIDE SIGNAGE STATING: "ELECTRICAL ROOM"
4. AT RESTROOM PROVIDE SIGNAGE STATING: "RESTROOM" (PER CBC 1117B.5)
5. AT UTILITY ROOM PROVIDE SIGNAGE STATING: "UTILITY ROOM"

SEE SHEET PA-9.1 FOR SURFACE PAINTED GRAPHICS AND STRIPING DETAILS

1 PA-10.01 INFORMATIONAL SIGN SCHEDULE

SCALE: NONE

Bayley Construction
3730 S. Susan St.
Suite 200
Santa Ana, CA, 92704
CA. License 734880
Tel 714-540-8863
Fax 714-556-8863

Bayley Construction
8005 S.E. 28th St.
P.O. Box 9004
Mercer Island, WA. 98040
WA. License BAYLEC034JC
Tel 206-621-8884
Fax 206-343-7728

BAYLEY CONSTRUCTION

Pacific Parking DESIGN
6 Venture, Suite 275 949.341.0066 t
Irvine, California 92618 949.341.0099 f

DLR Group WWCOT
Architecture Engineering Planning Interiors
4280 Latham Street, Suite H 951.682.0470 t
Riverside, California 92501 951.682.1801 f

LICENSED ARCHITECT SCOTT BRAYTON BERMAN C-22700 EXP. 9-30-13 STATE OF CALIFORNIA

Public Agency Submittal:
Issued for Bidding:
Issued for Construction:

Revisions:

A 09.15.2011 PERMIT SET

PHASE II: FOX ENTERTAINMENT PLAZA: PARKING GARAGE

3601 Market Street,
Riverside, CA 92501

CITY of RIVERSIDE

CITY OF RIVERSIDE

3900 Main Street, Riverside, CA 92522

Phase:
Revised
PPD Project № 10-101

TYPICAL SIGNAGE DETAILS

Issued Date: 05.02.2011
Drawn By: RTR
Checked By: SBH

PA-10.01

Sheet №

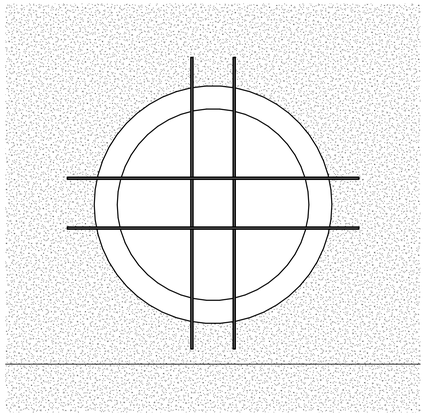

5 PA-11.1 TOWER OPENING DETAIL
3/4" = 1'-0"

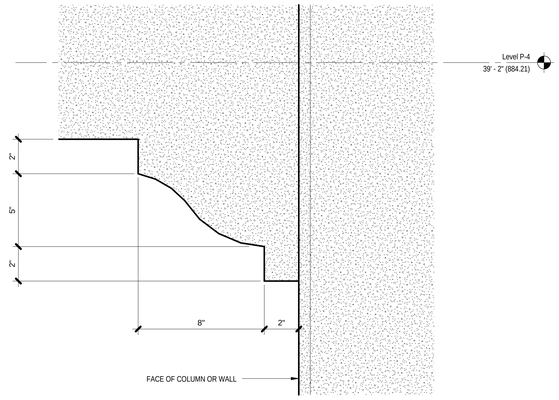

4 PA-11.1 TYPICAL FACADE DETAIL
3" = 1'-0"

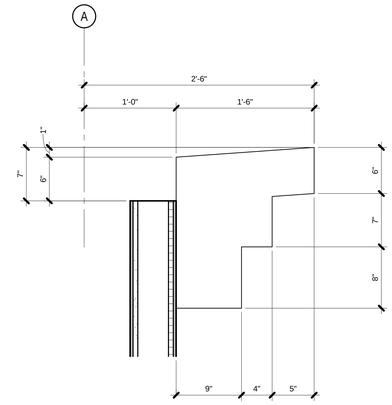

2 PA-11.1 SECTION at CORNICE TYPE 2
1 1/2" = 1'-0"

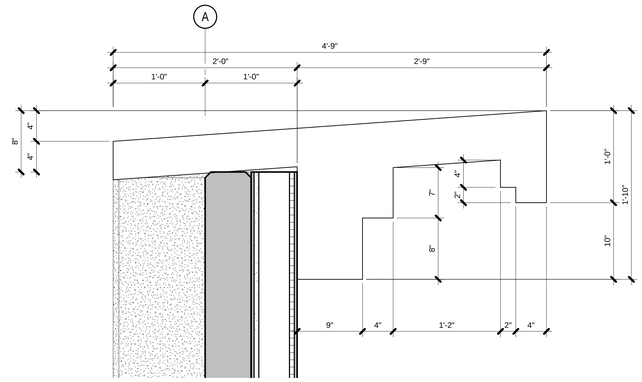

1B PA-11.1 SECTION at CORNICE TYPE 1B
1 1/2" = 1'-0"

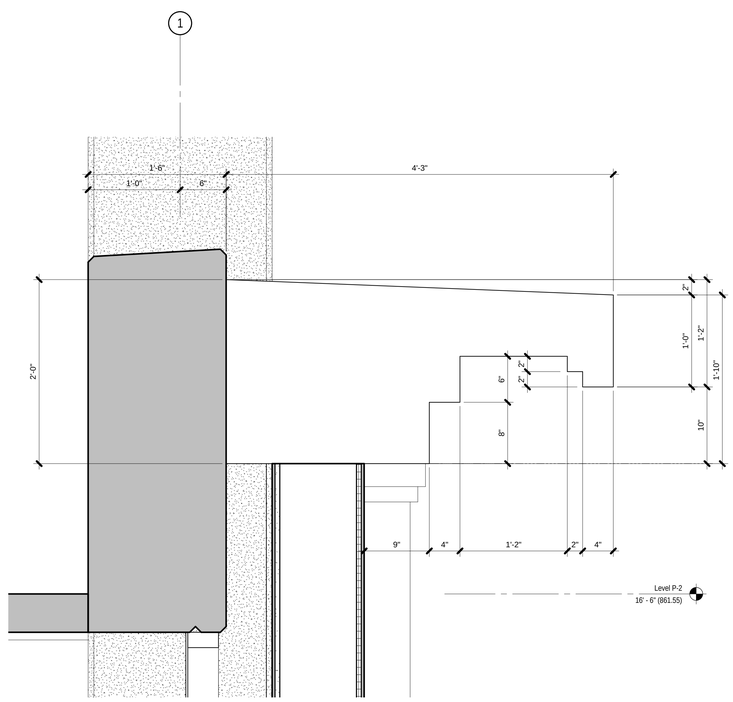

3 PA-11.1 SECTION at CORNICE TYPE 3 (WEST ENTRY)
1 1/2" = 1'-0"

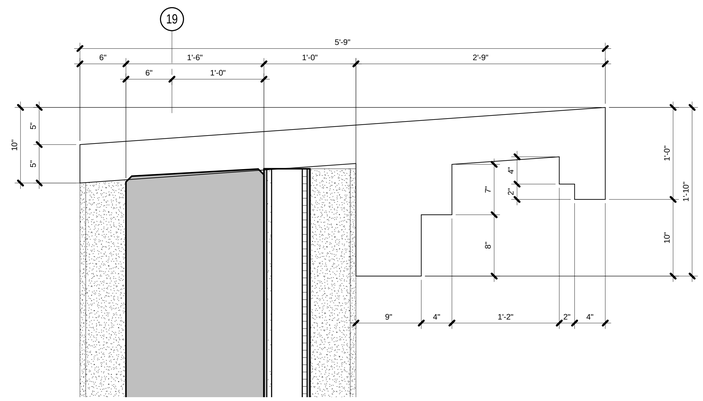

1A PA-11.1 SECTION at CORNICE TYPE 1A
1 1/2" = 1'-0"

Bayley Construction
3730 S. Susan St.
Suite 200
Santa Ana, CA. 92704
CA. License 734880
Tel 714-540-8863
Fax 714-556-8863

Bayley Construction
8005 S.E. 28th St.
P.O. Box 9004
Mercer Island, WA. 98040
WA. License BAYLECO343JC
Tel 206-621-8884
Fax 206-343-7728

BAYLEY CONSTRUCTION

Pacific Parking DESIGN
6 Venture, Suite 275 949.341.0066 t
Irvine, California 92618 949.341.0099 f

DLR Group WWCOT
Architecture Engineering Planning Interiors
4280 Latham Street, Suite H 951.682.0470 t
Riverside, California 92501 951.682.1801 f

LICENSED ARCHITECT
SCOTT BRAYTON BERMAN
C-22700
EXP. 9-30-13
STATE OF CALIFORNIA

Public Agency Submittal:
Issued for Bidding:
Issued for Construction:

#	Revisions:
A	09.15.2011 PERMIT SET

PHASE II: FOX ENTERTAINMENT PLAZA: PARKING GARAGE

3601 Market Street
Riverside, CA 92501

CITY of RIVERSIDE

CITY OF RIVERSIDE

3900 Main Street, Riverside, CA 92522

Phase:
Revised 04.19.2011
PPD Project № 10-101

FACADE DETAILS

Issued Date: 05.02.2011
Drawn By: RTR
Checked By: SBH

PA-11.1
Sheet №

File Path & Name: C:\Dimension Z\PPD\Projects\2009 - Fox Plaza Parking Structure (Bayley)\Fox PPD Revit\PPD Fox Theater Parking Garage_Owner.rvt
© WWCOT 2009 -- Plotted 9/13/2011 11:43:12 AM

PARKING STRUCTURE
ELECTRICAL PLANS

ELECTRICAL LEGEND

REFER TO DETAILS FOR MOUNTING HEIGHTS OF DEVICES
NOT ALL SYMBOLS, ABBREV., ETC. ARE NECESSARILY USED ON THIS PROJECT

LIGHTING

SYMBOL	DESCRIPTION
	RECESSED LUMINAIRE (SIZE/SHAPE VARIES)
	SURFACE LUMINAIRE (SIZE/SHAPE VARIES)
	SHADING OF ANY LUMINAIRE INDICATES CONNECTION TO ALTERNATE POWER SOURCE (EMERGENCY, UPS, STANDBY, ETC.) PER CIRCUITING INDICATED
	SUSPENDED LUMINARE (SIZE/SHAPE VARIES)
	POINT SOURCE – SURFACE, RECESSED CEILING MTD.
	FLOOR OR GRADE MOUNTED BOLLARD
	WALLWASH – SURFACE, RECESSED CEILING MTD.
	WRAP–AROUND TYPE FLUORESCENT
	TRACK LIGHTING WITH HEADS AS INDICATED.
	ADJUSTABLE POINT SOURCE – SURFACE CEILING, RECESSED CEILING MOUNTED.
	BATTERY POWER EMERGENCY UNIT EQUIPMENT (SEE LUMINAIRES SCHEDULE FOR QUANTITY OF HEADS) – WALL, CEILING MOUNTED.
	WALL SCONCE
	ILLUMINATED EXIT SIGN, SHADED QUADRANT INDICATES FACES, ARROWS AS SHOWN
	POLE MOUNTED LUMINAIRE– SINGLE OR DUAL HEAD
	POLE TOP MOUNTED LUMINAIRE
	"FOOT" INDICATES WALL MOUNTED LUMINAIRE
	FLUORESCENT STRIPLIGHT – POWER FEED SECTION, FEED THROUGH SECTION. LENGTH AS SHOWN.
	UNDERCABINET FLUORESCENT STRIPLIGHT
	FLUSH GRADE POINT SOURCE
PTA 3c / PTA 3A	LUMINAIRE MARKING CONVENTION LEGEND: PTA = LUMINAIRE TYPE IDENTIFICATION. SEE LUMINAIRE SCHEDULE. 3c = CIRCUIT NUMBER VIA LOCAL SWITCH (LOWERCASE LETTER) THAT SERVES THE LUMINAIRE. 3A = CIRCUIT NUMBER/UPPERCASE LETTER COMBINATION INDICATES LOW VOLTAGE RELAY OR LIGHTING CONTACTOR THAT SERVES THE LUMINAIRE
F1	LUMINAIRE TYPE IDENTIFICATION WHICH APPLIES TO ALL OTHER IDENTICAL LUMINAIRE SYMBOLS, UON.

SWITCHING CONTROLS

SYMBOL	DESCRIPTION
S^a	SINGLE POLE SWITCH (SUPERSCRIPT DENOTES SIMILARLY MARKED LUMINAIRES CONTROLLED TOGETHER)
S_2	TWO POLE SWITCH
S_3	THREE WAY SWITCH
S_D	SINGLE POLE DOUBLE THROW MOMENTARY SWITCH
S_K	KEY OPERATED SWITCH
S_M	MOTOR RATED SWITCH
D	DIMMER SWITCH. NUMBER INDICATES WATTAGE RATING. IF NOT SHOWN THEN EQUAL TO LOAD.
S_P	SWITCH WITH PILOT LIGHT (PILOT IS "ON WHEN SWITCH IS "ON").
S_{TS}	TIMER SWITCH
S_{WP}	WEATHERPROOF SWITCH
S_T	THERMAL OVERLOAD SWITCH
S_R	LIGHTING RELAY SWITCH
S_V	LINE VOLTAGE, VARIABLE SPEED FAN CONTROL SWITCH, PROVIDED BY DIV. 15, INSTALLED BY DIV. 16. LOCATE ADJACENT TO LIGHT SWITCHES.
$	LOW VOLTAGE MOMENTARY CONTACT SWITCH PANEL, NUMBER SUPERSCRIPT INDICATES SWITCH PANEL NUMBER (REFER TO LIGHTING CONTROL DIAGRAM)
	EQUIPMENT OPERATOR PUSH BUTTON STATION. PROVIDED WITH EQUIPMENT, INSTALLED AND CONNECTED BY DIV. 16, UON.
	PUSHBUTTON OR PUSHBUTTONS, BY DIV. 16
PC	PHOTOCELL
TC	TIME CLOCK
OS	OCCUPANCY SENSOR – WALL MOUNTED
OS	360 DEGREE OCCUPANCY SENSOR – CEILING MTD.
OS	180 DEGREE OCCUPANCY SENSOR – CEILING MTD.
OS	CORRIDOR/AISLE OCCUPANCY SENSOR – CEILING MOUNTED
OSab	OCCUPANCY SENSOR & SWITCH GANGED UNDER A COMMON COVER PLATE. OCCUPANCY SENSOR TO CONTROL ALL LIGHT FIXTURES IN ROOM WITH 1/2 LIGHT REDUCTION CONTROLLED BY SWITCH, DESIGNATED BY LETTER.
T	THERMOSTAT – WALL, CEILING. PROVIDED BY MECHANICAL, INSTALLED AND WIRED BY ELECTRICAL.
A	AQUASTAT – PROVIDED BY DIV. 15, INSTALLED AND WIRED BY DIV. 16
EPO	EMERGENCY POWER OFF, HEAVY–DUTY, OIL–TIGHT RED MUSHROOM–HEAD PUSHBUTTON W/ GUARD.
LCP ?	LIGHTING CONTROL PANEL AND ASSOCIATED COMPONENTS. PROVIDE 120V OR 277V CONTROL POWER AS REQUIRED OR AS INDICATED.
	RELAY
TX	REMOTE MOUNTED LINE TO LOW–VOLTAGE FUSED TRANSFORMER. CONCEAL FROM VIEW.

DISTRIBUTION & EQUIPMENT

SYMBOL	DESCRIPTION
	BRANCH CIRCUIT PANELBOARDS, SURFACE AND RECESS MOUNTED, DASHED EQUIP. = FUTURE
	MOTOR CONTROL CENTER W/ CODE CLEARANCES SHOWN, DASHED EQUIP. = FUTURE
	TRANSFORMER WITH CODE CLEARANCES SHOWN
	SERVICE AND/OR DISTRIBUTION EQUIPMENT WITH CODE CLEARANCES SHOWN
	CONNECTION TO MOTOR PROVIDED BY OTHERS
VFD	CONNECTION TO DIV. 15 FURNISHED VARIABLE FREQUENCY DRIVE WITH INTEGRAL DISCONNECT DIV. 16 TO INSTALL VFD EQUIPMENT
30A	DISCONNECT SWITCH, SIZE AS NOTED OR IF NOT SHOWN SIZE PER CONNECTED MOTOR SIZE AND MOTOR DISCONNECT SCHEDULE
F 30A	FUSED DISCONNECT SWITCH, SIZE AS NOTED. SIZE FUSE PER MANUFACTURER'S RECOMMENDATIONS
C 60AT	ENCLOSED CIRCUIT BREAKER DISCONNECT SWITCH, TRIP SIZE AS NOTED.
	DISCONNECT W/ MAGNETIC MOTOR STARTER (CONTROLLER) OR CONTACTOR. SIZE PER LOAD SERVED. NEMA SIZE #1 MINIMUM.
	MAGNETIC MOTOR STARTER (CONTROLLER) OR CONTACTOR. SIZE PER LOAD SERVED. NEMA SIZE #1 MINIMUM.
	DIV. 16 CONNECTION TO EQUIPMENT PROVIDED BY OTHERS. SHADED = ON ALT. POWER SOURCE NOTED
	DIV. 16 CONNECTION TO EQUIPMENT WITH INTEGRAL DISCONNECT THAT IS PROVIDED BY OTHERS. SHADED = ON ALT. POWER SOURCE NOTED
	EQUIPMENT OR TERMINAL ENCLOSURE AS NOTED, SURFACE AND RECESS MOUNTED
	BUILDING GROUND BUS, SEE DETAILS
DM	DAMPER MOTOR

DIAGRAMS

SYMBOL	DESCRIPTION
	HAND/OFF/AUTO SWITCH
	SWITCH
	FIELD INSTALLED CONTROL CIRCUIT WIRING TO DESTINATION SHOWN, U.O.N.
	NORMALLY CLOSED CONTACTOR OR RELAY CONTACTS
	NORMALLY OPEN CONTACTOR OR RELAY CONTACTS
	BUS DUCT
	BUS BAR
	BATTERY GENERAL
	RESISTOR
	CONNECTOR, FEMALE AND MALE RESPECTIVELY
	PIPE GROUND
C	CONTACTOR COIL
R	RELAY COIL
TVSS	TRANSIENT VOLTAGE SURGE SUPPRESSOR
	CURRENT TRANSFORMER
	NORMALLY OPEN PUSH BUTTON
	NORMALLY CLOSED PUSH BUTTON
M M	UTILITY CO. APPROVED SOCKET WITH METER INSTALLED. SQUARE = REMOTE MOUNTED
DMU	DIGITAL METER UNIT. REFER TO SPECIFICATIONS.
	TERMINAL FOR FIELD CONNECT, SIZE & TYPE SUITABLE FOR CONDUCTOR INSTALLED.
	LED INDICATOR LIGHT, PUSH TO TEST, R=RED G= GREEN, B= BLUE, Y= YELLOW, W= WHITE
	DELTA CONNECTION
	GROUNDED WYE CONNECTION
	CONNECTION TO GROUND
100AT 225AF	CIRCUIT BREAKER, WITH TRIP & FRAME AMPERE RATING
225AF 400AS	FUSED SWITCH, WITH FUSE AND SWITCH AMPERE RATING
GF	GROUND FAULT TRIP UNIT
BA	BELL ALARM TRIP MODULE CONTACTS
ST	SHUNT TRIP UNIT, 120VAC OR VOLTAGE AS NOTED
CM	MONITORING COMMUNICATION MODULE
AM	INTEGRAL AMMETER DISPLAY
K	KEY INTERLOCK
	MECHANICAL INTERLOCK
	GENERATOR
C	CONNECTION TO DIV. 15 CHILLER
	SOLENOID

POWER DEVICES

SYMBOL	DESCRIPTION
	SIMPLEX RECEPTACLE – WALL, CEILING, ON ALT.
	DUPLEX RECEPTACLE – WALL, CEILING, ON ALT.
	DOUBLE DUPLEX RECEPTACLE – WALL, CLG, ON ALT.
L5–15R	SPECIAL PURPOSE RECEPTACLE –WALL, CEILING ON ALT. POWER; NEMA CONFIGURATION AS NOTED
AB	RECEPTACLE TYPE SHOWN –WALL –ABOVE COUNTER BACKSPLASH. SEE ARCHITECTURAL DRAWINGS.
"ON ALT."	SHADED RECEPTACLES NOTED "ON ALT." ABOVE ARE CONNECTED TO ALTERNATE POWER SOURCE (EMERG., STANDBY, UPS, ETC.) PER CIRCUITING INDICATED
	DUPLEX RECEPTACLE – WALL – HALF SWITCHED
	COMBINATION SWITCH/DUPLEX RECEPTACLE
GFI	DUPLEX RECEPTACLE – WALL – WITH INTEGRAL GROUND FAULT CIRCUIT INTERRUPTER
WP	RECEPT. TYPE SHOWN W/ WEATHERPROOF COVER AND INTEGRAL GROUND FAULT CIRCUIT INTERRUPTER
+42"	RECEPT. TYPE SHOWN AT SPECIAL HEIGHT
J	WALL MOUNTED ELECTRICAL CONNECTION TO ELECTRIFIED FURNITURE. PROVIDE 8 WIRES (4 HOTS, 1 DEDICATED NEUTRAL, 1 COMMON NEUTRAL, 1 ISOLATED GROUND) NEUTRALS TO BE #10 AWG. USE LIQUID–TIGHT FLEX.
WP	DUPLEX RECEPTACLE SHOWN W/ WEATHERPROOF COVER, INTEGRAL GROUND FAULT CIRCUIT INTERRUPTER, AND STUB DOWN TO CLNG. SPACE BELOW.
	FLUSH FLOOR BOX DEVICE – DEVICE TYPE PER SYMBOLS ABOVE
	POKE THRU UNIT WITH DUPLEX RECEPTACLE – FLUSH, (WIREMOLD RC7 SERIES)
	COMBO POKE THRU UNIT WITH DUPLEX RECEPTACLE AND DATA OUTLET – FLUSH, (WIREMOLD RC7 SERIES)
	COMBO POKE THRU UNIT WITH DOUBLE DUPLEX RECEPTACLE AND DATA OUTLET – FLUSH, (WIREMOLD RC9 SERIES)
	COMBO POKE THRU UNIT WITH DUPLEX (WIREMOLD RC7 SERIES)
	COMBO POKE THRU UNIT WITH DOUBLE DUPLEX (WIREMOLD RC9 SERIES)
C	DATA OUTLET ABOVE CEILING FOR WIRELESS NETWORK. PROVIDE 2 UTP TO IDF.
	MULTI–SERVICE FLOOR BOX CAST IN CONC. OR IN RAISED FLOOR – SEE ARCH DWGS; WITH RECEPTACLES & SIGNAL OUTLETS AS NOTED. 2=QUANITY TWO OR MORE OF DATA LINES REQUIRED
J	POKE THRU ASSEMBLY, PROVIDE THE FOLLOWING (WIREMOLD OR EQUAL): FURNITURE FEED (POWER/LTG)=RC7AFFTC SERIES FURNITURE FEED (TELCOM) = RC9AM2TC SERIES AUDIO/VIDEO FEED = RC9AM2ST SERIES [NOTE: PROVIDE CONDUIT CONNECTORS FOR FURNITURE FEED (POWER/LTG & TELCOM)]
	TWO OR THREE COMPARTMENT SURFACE METAL RACEWAY WITH RECEPTACLES AND OUTLETS AS INDICATED, LENGTH AS INDICATED ON THE DRAWINGS. PROVIDE ALL FITTINGS AS REQUIRED.

SIGNAL DEVICES

SYMBOL	DESCRIPTION
	TERMINAL/MOUNTING BOARD, 8' HIGH X WIDTH AS SHOWN, FIRE TREATED.
	SIGNAL SYSTEM EQUIPMENT ENCLOSURES AS NOTED– SURFACE, RECESSED MOUNTED
#	COMBO TELEPHONE/DATA OUTLET – WALL
# W	TELEPHONE OUTLET – WALL, W = USE HIGHER MOUNTING HEIGHT PER MOUNTING HT. DETAIL
#	DATA OUTLET – WALL TEL/DATA MARKING CONVENTION LEGEND: # = IDENTIFICATION OF OUTLET TYPE, SEE FLOOR PLANS FOR SUPPLEMENTAL LEGEND
C	CEILING DATA OUTLET
S S	SPEAKER – WALL, CEILING
V	VOLUME CONTROL – WALL
B	BELL
	BUZZER
	CHIME
C C	SYSTEM CLOCK – WALL , CEILING
TV VJ	RF COAX CABLE OUTLET (TV, VCR, ETC.) SEE ARCH DWG.
	RF COAX CABLE SIGNAL SPLITTER
	RF COAX CABLE DISTRIBUTION AMPLIFIER. PROVIDE 120V POWER AS REQUIRED OR AS INDICATED. SEE RISER DIAGRAM.
I M	INTERCOM STATION – WALL, DESK M = MASTER STATION
M M	MICROPHONE JACK – WALL, FLOOR
	FLUSH FLOOR DEVICE – DEVICE TYPE PER SYMBOLS ABOVE
	PEDESTAL FLOOR DEVICE – DEVICE TYPE PER SYMBOLS ABOVE
SK PA	PAGING SYSTEM HORN (OUTDOOR)
S_D S_D	DUAL COIL SPEAKER – SURFACE CEILING, RECESSED CEILING.
S	PAGING OR PAGING/SOUND MASKING SPEAKER, MOUNTED ABOVE ACOUSTIC TILE CEILING.
	ROOM PUSHBUTTON (EDWARDS #620 OR EQUAL) WITH ROOM ANNUNCIATOR MOUNTING PLATE (EDWARDS 147–10 OR EQUAL).
C	CHIME/STROBE COMBO: EDWARDS #6563–G5 WITH XFMR (EDWARDS #592) OR EQUAL

FIRE ALARM SYSTEM

SYMBOL	DESCRIPTION
FACP	FIRE ALARM CONTROL PANEL AND ASSOCIATED COMPONENTS. PROVIDE 120V POWER AS REQUIRED OR AS INDICATED.
FSA	FIRE ALARM SYSTEM ANNUNCIATOR
F	FIRE ALARM SYSTEM MANUAL PULL STATION, WALL MOUNTED
	ALARM BELL OR GONG
30	STROBE LIGHT, WALL MOUNTED (# = CANDELA RATING)
SK , SK	SPEAKER – CEILING, WALL MOUNTED
SK 15	COMBINATION SPEAKER/STROBE, WALL MOUNTED (# = CANDELA RATING)
	SPRINKLER VALVE TAMPER SWITCH CONNECTION
	SPRINKLER FLOW SWITCH CONNECTION
	SMOKE DETECTOR, DUCT MOUNTED, WITH FULL WIDTH SAMPLING TUBES. PHOTOELECTRIC TYPE UON.
	SMOKE DETECTOR, CEILING OR PLENUM, WALL MOUNTED. MULTI–SENSOR TYPE UON.
E E	ELEVATOR RECALL SMOKE DETECTOR, CEILING OR PLENUM, WALL MOUNTED. MULTI–SENSOR TYPE UON.
	ELECTROMAGNETIC DOOR HOLDER – WALL, FLOOR MOUNTED. 24VDC AND PROVIDED BY DIV. 8 UON.
CM	ADDRESSABLE CONTROL MODULE
MM	ADDRESSABLE MONITOR MODULE
D	DUCT OR AREA SMOKE DETECTOR, AS REQUIRED, UON. SERVING DIV. 15 FIRE/SMOKE DAMPER.
	HEAT DETECTOR, CEILING MOUNTED. RATE OF RISE AND FIXED TEMPERATURE TYPE, UON.
—F—	FIRE ALARM CONDUIT

SECURITY SYSTEM

SYMBOL	DESCRIPTION
	CCTV SECURITY FIXED CAMERA – WALL,CEILING
	CCTV SECURITY INDOOR DOME CAMERA
PTZ	CCTV SECURITY PAN/TILT/ZOOM CAMERA
MRIB	INTELLIGENT CARD READER INTERFACE
MO	ROLL–UP DOOR MOTOR CONTROL OUTPUT
D	DOOR POSITION MONITOR SWITCH
RX RX	REQUEST TO EXIT DEVICE WALL,MULLION MOUNTED
I M	INTERCOM STATION – WALL, DESK MOUNTED. M = MASTER STATION
DS	DURESS PUSHBUTTON STATION
CR CR	CARD READER– WALL MOUNTED/MULLION MOUNTED
ER	EMERGENCY DOOR RELEASE BREAK–GLASS STATION
N	LOCAL DOOR MONITOR WARNING NOISE DEVICE
EB	ELECTRIC BOLT
EL	ELECTRIC LOCK/LATCH
ES	ELECTRIC STRIKE
ML	MAGNETIC LOCK
GB	GLASS BREAK SENSOR
H	ELECTRIC POWER TRANSFER HINGE
	SECURITY ELECTRONIC MOTION SENSOR

REFERENCE SYMBOLS

SYMBOL	DESCRIPTION
12	SHEET NOTE REFERENCE
125.4	BRANCH CIRCUIT OR FEEDER NOMINAL AMPACITY & TYPE; REFER TO BRANCH CIRCUIT AND FEEDER SCHEDULES FOR WIRE AND CONDUIT SIZES & QTY.
1 T4.1	REFER TO DETAIL NO. ON DRAWING INDICATED NOT ALL DETAIL REFERENCES ARE SHOWN. ALL DETAILS APPLY TO ALL APPLICABLE SITUATIONS, UON.
2 T4.1	ELEVATION TAG: REFER TO ELEVATION NUMBER ON DRAWING INDICATED
2 T4.1	SECTION TAG: REFER TO SECTION NUMBER ON DRAWING INDICATED
K123	KITCHEN EQUIPMENT REFERENCE, REFER TO KITCHEN EQUIPMENT SCHEDULE
CH 1	MECHANICAL EQUIPMENT IDENTIFICATION TAG
EQUIP NAME	EQUIPMENT IDENTIFICATION TAG

WIRING

SYMBOL	DESCRIPTION
	NEW WIRING CONCEALED IN CEILING OR WALL.
	LINE WEIGHT TOP TO BOTTOM= EXISTING TO REMAIN, FUTURE
	WIRING CONCEALED IN FLOOR OR UNDER GRADE OR ROUTED IN CEILING SPACE OF FLOOR BELOW. LINE WEIGHT TOP TO BOTTOM= NEW, EXISTING TO REMAIN, FUTURE
	WIRING EXPOSED. LINE WEIGHT TOP TO BOTTOM= NEW, EXISTING TO REMAIN, FUTURE
—X—X—X—	EXISTING WIRING TO BE REMOVED
—T—	TELEPHONE SYSTEM CONDUIT
—MV—	MEDIUM VOLTAGE CONDUIT
—G—G—	GROUNDING GRID OR CONDUCTORS
—C—	CONTROL CONDUIT
	STROKES INDICATE QUANTITY OF #12 AWG. CONDUCTORS, UON. NOTE: SEE BRANCH CIRCUIT WIRING LEGEND.
	GROUND
	HOT
	GROUND, ISOLATED
	NEUTRAL
L1A–1,3 HD1A	HOME RUN WIRING TO INDICATED DESTINATION, 3/4"C. MIN. OR AS OTHERWISE NOTED. CONTRACTOR SHALL USE CIRCUIT SIZES NOTED.
	CONDUIT RUN TURNED UP THROUGH FLOOR OR CEILING. CORE & FIREPROOF AS REQUIRED.
	CONDUIT RUN TURNED DOWN THROUGH FLOOR OR CEILING. CORE & FIREPROOF AS REQUIRED.
	CONDUIT STUBBED OUT AT LOCATION SHOWN. PROVIDE INSULATED BUSHING & PULLROPE.
	RACEWAY STUBBED OUT FOR FUTURE CONTINUATION; CAP, MARK AND RECORD LOCATION.
	TELEPHONE/DATA SLEEVE THROUGH WALL, ABOVE CEILING. EXTEND TO ACCESSIBLE TILE CLG. BOTH SIDES. TERMINATE WITH BUSHINGS. (1) 1.25" CO UON. COORDINATE LOCATIONS WITH CABLE INSTALLER(S) PRIOR TO ROUGH–IN.
J J J	JUNCTION BOXES, WALL, CEILING AND FLUSH FLOOR MOUNTED. 4" SQ. BOX MIN., LARGER IF REQUIRED
PB	PULL BOX, MIN. SIZE PER NEC., UON.
	FLEXIBLE CONDUIT CONNECTION

BRANCH CIRCUIT WIRING LEGEND

1/2"C 3#12*	10 1/2"C 3#10	8 3/4"C 2#8 & 1#10G
1/2"C 4#12*	10 1/2"C 4#10	8 3/4"C 3#8 & 1#10G
1/2"C 5#12*	10 3/4"C 5#10	8 1"C 4#8 & 1#10G
3/4"C 6#12*	10 3/4"C 6#10	8 1"C 5#8 & 1#10G
3/4"C 7#12*	10 1"C 7#10	8 1–1/4"C 6#8 & 1#10G
1"C 8#12*	10 1"C 8#10	8 1–1/4"C 7#8 & 1#10G
1"C 9#12*	10 1"C 9#10	8 1–1/4"C 8#8 & 1#10G

* FOR 120 VOLT RECEPTACLE WIRING, PROVIDE #10 AWG NEUTRAL CONDUCTORS MINIMUM.

NOTE: SYMBOL INCLUDES EQUIPMENT GROUND CONDUCTOR (NOT INDICATED).

POWER & DATA LEGEND

- DUPLEX WALL RECEPTACLE @ +18" A.F.F. (U.N.O.)
- 220 V OUTLET, L620R MOUNT ON RACK ABOVE SERVER. VERIFY IN FIELD
- COPY: 220 V WALL RECEPTACLE FOR COPY MACHINE @ +18". VERIFY RECEPTACLE CONFIGURATION WITH OWNER
- DEDICATED DUPLEX WALL RECEPTACLE @ +18" A.F.F. (U.N.O.)
- WALL MOUNTED POWER & TEL/DATA FEEDS TO SYSTEM FURNITURE. PROVIDE MIN. 2" DATA CONDUIT FROM J–BOX INTO ACCESSIBLE CEILING SPACE. ELECTRICAL CONTRACTOR TO MAKE FINAL CONNECTION.
- COMBINATION DATA/TEL. WALL RECEPT. @ +18" A.F.F. (U.N.O)
- DOUBLE DUPLEX WALL RECEPTACLE @ 18" A.F.F. (U.N.O.)
- DEDICATED DOUBLE DUPLEX WALL RECEPT. @ 18" A.F.F. (U.N.O.)
- CR: 3/4" CONDUIT UP INTO CEILING SPACE FOR CARD READER. INSTALL CARD READER AT 48" A.F.F. TO TOP OF DEVICE.
- IC: INTERCOM LOCATION– PROVIDE 3/4" CONDUIT ONLY UP INTO ACCESSIBLE CEILING SPACE.
- VJ: PLASMA TV J–BOX, FSR INC. PWB–100 W/ DUPLEX OUTLET AND (2) LOW VOLTAGE ENTRY BOX (TOP & BOTT). EXTEND 1–1/2" CONDUIT TO WALL MTD. J–BOX AND UP TO ACCESSIBLE CEILING SPACE.
- TV: SINGLE GANG BOX (3) COAX RG6 HOMERUN TO MDF ROOM 09.
- KP: KEYPAD LOCATION– PROVIDE 3/4" CONDUIT ONLY UP INTO ACCESSIBLE CEILING SPACE.
- PB: 3/4" CONDUIT UP INTO CEILING SPACE FOR LOW VOLTAGE PANIC BUTTON WIRING
- D: 3/4" CONDUIT UP INTO CEILING SPACE FOR LOW VOLTAGE DOOR RELEASE WIRING.
- J: WALL SURFACE MOUNTED JUNCTION BOX
- FLUSH FLOOR MOUNTED POKE–THRU POWER & AV/DATA FEEDS TO CONFERENCE TABLE. ELECTRICAL CONTRACTOR TO MAKE FINAL CONNECTION.
- FLUSH FLOOR MOUNTED POKE–THRU AV/DATA FEEDS TO CONFERENCE TABLE.
- FLUSH FLOOR MOUNTED BOX POWER & AV/DATA FEEDS TO CONFERENCE TABLE. ELECTRICAL CONTRACTOR TO MAKE FINAL CONNECTION.
- FLUSH FLOOR MOUNTED BOX POWER & TEL/DATA FEEDS TO SYSTEM FURNITURE. ELECTRICAL CONTRACTOR TO MAKE FINAL CONNECTION.
- FLUSH FLOOR MOUNTED POKE–THRU POWER & TEL/DATA FEEDS TO SYSTEM FURNITURE. ELECTRICAL CONTRACTOR TO MAKE FINAL CONNECTION.
- FLUSH FLOOR MOUNTED BOX TEL/DATA FEED TO SYSTEM FURNITURE.
- FLUSH FLOOR MOUNTED POKE–THRU TEL/DATA FEED TO SYSTEM FURNITURE.
- FLUSH FLOOR MOUNTED BOX AV/DATA AND DUPLEX RECEPTACLES.
- FLUSH FLOOR MOUNTED POKE–THRU TEL/DATA AND DUPLEX RECEPTACLES.
- ABOVE CEILING J–BOX FOR WIRELESS NETWORK LOCATION, PROVIDE DUPLEX OUTLET ABOVE CEILING.
- DATA PP: FURNITURE SYSTEM POWER POLE FOR TEL/DATA CABLES ONLY.
- PP: FURNITURE SYSTEM POWER & TELE/DATA POLE CONNECTED TO J–BOX ABOVE CEILING.
- FLOOR / SURFACE MOUNTED JUNCTION BOX.
- FLOOR / SURFACE MOUNTED DUPLEX OUTLET.
- FLOOR / SURFACE MOUNTED FOURPLEX OUTLET.
- E: EXISTING
- MODULAR FURNITURE SYSTEM. ELECTRICAL SHOWN FOR TYPICAL WORKSTATION CONFIGURATION. POWER TO BE FURNISHED WITH WORKSTATIONS.
- 3/4" THICK x FULL HEIGHT PLYWOOD BACKBOARD. INSTALL TOP EDGE FLUSH TO CEILING. UNLESS NOTED OTHERWISE. PAINT TO MATCH ADJACENT WALL PRIOR TO EQUIPMENT INSTALLATION.

ELECTRICAL GENERAL NOTES

A. THE SCALE INDICATED ON THE PLANS AND DETAILS IS BASED ON FULL SIZE DRAWINGS. REDUCED DRAWINGS MAY BE ISSUED. EXAMPLE: 1/4" SCALE FLOOR PLANS ARE REDUCED TO 1/8" = 1'–0" ON HALF SIZE PRINTS. SEE SCALE MARKINGS ON DRAWINGS.

B. MOUNT WALL OUTLETS AND RECEPTACLES AT +18" VERTICALLY, UNLESS OTHERWISE NOTED OR AS REQUIRED TO CLEAR COUNTERTOPS, BACKSPLASHES, BOOKCASES AND SHELVES. REFER TO ARCHITECTURAL DRAWINGS FOR CASEWORK DETAILS. REFER TO THE ELECTRICAL SPECIFICATIONS FOR ADDITIONAL REQUIREMENTS.

C. MOUNT SWITCHES, THERMOSTATS AND DEVICES REQUIRING OBSERVATION OR OPERATION AT +42", UNLESS OTHERWISE NOTED. REFER TO THE ELECTRICAL SPECIFICATIONS.

D. ALL ELECTRICAL CONDUIT CROSSING BUILDING SEISMIC SEPARATIONS OR EXPANSION JOINTS SHALL BE PROVIDED WITH APPROVED FLEXIBLE CONNECTORS.

E. ALL WORK TO COMPLY WITH THE 2010 CALIFORNIA ELECTRICAL CODE, 2008 NATIONAL ELECTRICAL CODE, CALIFORNIA FIRE CODE 2010 AND CALIFORNIA BUILDING CODE WITH LOCAL AMENDMENTS.

F. ALL EQUIPMENT MUST BE LISTED AND LABELED BY A RECOGNIZED TESTING AGENCY, IE U.L.

G. ALL CONDUCTORS TO BE COPPER THHN/THWN MIN. ROMEX/NON–METALLIC SHEATHED CONDUCTORS NOT PERMITTED.

H. THE COLD WATER LINE GROUND CONNECTION SHALL BE MADE WITHIN 5' FROM THE POINT OF COLD WATER LINE ENTRY TO THE BUILDING.

J. NOT USED.

K. TEST FOR EXIT ILLUMINATION AND EXIT SIGNS, INCLUDING DIRECTIONAL EXIT SIGN TELECOMED BY EITHER THE NORMAL PREMISES WIRING OR ANY ADDITIONAL REQUIRED EMERGENCY SYSTEMS SHALL BE CONDUCTED IN THE PRESENCE OF THE BUILDING INSPECTION STAFF TO ENSURE COMPLIANCE. THE TEST TIMES FOR EMERGENCY SYSTEMS SHALL BE ARRANGED IN ADVANCE AND ALL STAFFING COSTS ASSOCIATED WITH EITHER PRE– OR AFTER HOURS TESTING SHALL BE PAID AT THIS TIME. THE TESTING AND APPROVAL OF SUCH SYSTEMS SHALL OCCUR PRIOR TO THE ISSUANCE OF A TEMPORARY CERTIFICATE OF APPROVAL OR FINAL APPROVAL OF THE PROJECT.

L. FIRE ALARM SYSTEM SHALL BE SUBMITTED SEPARATELY FOR DEFERRED PLAN CHECK AND PERMITTING.

M. FIRE ALARM DEVICES SHALL BE WHITE FINISH.

ABBREVIATIONS

(E)	EXISTING TO REMAIN
(F)	FUTURE
(R)	EXISTING TO BE REMOVED
(RL)	EXISTING TO BE RELOCATED
AB	ABOVE COUNTER BACKSPLASH
ACU	AIR CONDITIONING UNIT
AC	ALTERNATING CURRENT
A, AMP	AMPERES
AF	AMPERE (RATED) FUSE OR CB FRAME
AFF	ABOVE FINISHED FLOOR
AFG	ABOVE FINISHED GRADE
AIC	AVAILABLE INTERRUPTING CURRENT
AL	ALUMINUM (ALLOY)
ALC	AUTOMATIC LIGHTING CONTROL
ARS	AVAILABLE RMS SYMMETRY AMPERE
AS	AMPERE (RATED) SWITCH
AT	CIRCUIT BRKR TRIP SETTING (AMPS)
ATS	AUTOMATIC TRANSFER SWITCH
AUTO	AUTOMATIC
AUX	AUXILIARY
AWG	AMERICAN WIRE GAUGE
B	BELL (FIRE ALARM)
BAT	BATTERY
BG	BELOW GRADE
BRKR	CIRCUIT BREAKER
C	CONDUIT (CIRCULAR RACEWAY)
CAB	CABINET
CB	CIRCUIT BREAKER
CFM	CUBIC FEET PER MINUTE
CKT	CIRCUIT
CLG	CEILING
CO	CONDUIT ONLY
CPT	CONTROL POWER TRANSFORMER
CT	CURRENT TRANSFORMER
CU	COPPER
DC	DIRECT CURRENT
DISC	DISCONNECT
DIA	DIAMETER
DIV	DIVISION
DP	DISTRIBUTION PANEL
DPDT	DOUBLE POLE DOUBLE THROW
DPST	DOUBLE POLE SINGLE THROW
DWG	DRAWING
E,EMERG	EMERGENCY
EF	EXHAUST FAN
EMT	ELECTRICAL METALLIC TUBING
ENCL	ENCLOSURE
EO	ELECTRICALLY OPERATED
EOL	END OF LINE
EWC	ELECTRIC WATER COOLER
EWH	ELECTRIC WATER HEATER
FA	FIRE ALARM
FAA	FIRE ALARM ANNUNCIATOR
FAEP	FIRE ALARM EXTENDER PANEL
FF	FLUSH FLOOR MOUNTED
FLA	FULL LOAD AMPERES
FLEX	FLEXIBLE
FO	FIBER OPTIC
FPB	FAN POWERED BOX
FSD	FIRE/SMOKE DAMPER
FU	FUSE
GEN	GENERATOR
GFI	GROUND FAULT CIRCUIT INTERRUPTER
GND	GROUND
GRAP	GENERATOR REMOTE ANNUNCIATOR PNL
GRC	GALVANIZED RIGID STEEL CONDUIT
HLO	HANDLE LOCK–ON(OFF)
HP	HORSEPOWER
HPF	HIGH POWER FACTOR
HZ	HERTZ (CYCLES PER SECOND)
IER	INTEGRATED EQUIPMENT (SHORT CIRCUIT) RATING (RMS SYM. AMPS)
IES	ILLUMINATING ENGINEERING SOCIETY
IG	ISOLATED GROUND
IMC	INTERMEDIATE METAL CONDUIT
K	KEY OPERATED
KCMIL	THOUSAND CIRCULAR MILS
KO	KNOCK OUT
KW	KILOWATTS
KVA	KILOVOLT–AMPERES
LTG	LIGHTING
LCP	LIGHTING CONTROL PANEL
L	LENGTH
MAX	MAXIMUM
MCA	MINIMUM CIRCUIT AMPERES
MFR	MANUFACTURER
MIN	MINIMUM
MISC	MISCELLANEOUS
MLO	MAIN LUGS ONLY
MRS	MINIMUM RMS SYMMETRY AMPERE
MTD	MOUNTED
MTR	MOTOR
(N)	NEW
–N–	NEUTRAL (GROUNDED CONDUCTOR)
NC	NORMALLY CLOSED
NEC	NATIONAL ELECTRICAL CODE
–,NEG	NEGATIVE
NEMA	NATIONAL ELECTRICAL MFGR'S ASSOC.
NL	NIGHT LIGHT (UNSWITCHED)
NO	NORMALLY OPEN
NTS	NOT TO SCALE
OC	ON CENTER
OFCI	OWNER FURNISHED, CONTRACTOR INSTALLED
OFOI	OWNER FURNISHED, OWNER INSTALLED
OS	OCCUPANCY SENSOR
P	POLE
PB	PUSHBUTTON
PH, ø	PHASE
PNL	PANEL
+,POS	POSITIVE
PRI	PRIMARY
PT	POKE THRU
REQD	REQUIRED
RNC	RIGID NON–METALLIC CONDUIT (PVC)
RS	RAPID START
S.A.D.	SEE ARCHITECTURAL DRAWINGS
SEC	SECONDARY
SPDT	SINGLE POLE DOUBLE THROW
SPST	SINGLE POLE SINGLE THROW
SUB	SUBSTATION
SWBD	SWITCHBOARD
TB	TERMINAL BOARD
TDC	TIME DELAY CLOSING
TDO	TIME DELAY OPENING
TEL	TELEPHONE
TYP	TYPICAL
UL	UNDERWRITERS LAB
UON	UNLESS OTHERWISE NOTED
UPS	UNINTERRUPTIBLE POWER SUPPLY
UTP	UNSHIELDED TWISTED PAIR
V	VOLTS
VA	VOLT–AMPERES
VFD	VARIABLE FREQUENCY DRIVE
VD	VOLTAGE DROP
W	WATT
W/	WITH
W/O	WITHOUT
WP	WEATHERPROOF, SEE RECEPT. SYMBOL
XFMR	TRANSFORMER
XP	FIRE ALARM TRANSPONDER
", IN	INCHES
', FT	FEET
ø	PHASE
>	GREATER THAN
<	LESS THAN
≥	GREATER THAN OR EQUAL TO

ELECTRICAL DRAWING LIST

P–E000	ELECTRICAL LEAD SHEET
P–E001	SINGLE LINE DIAGRAM
P–E002	PANEL SCHEDULES
P–E100	ELECTRICAL SITE PLAN
P–E201	POWER PLAN – LEVEL P–1
P–E301	LIGHTING PLAN – LEVEL P–1
P–E302	LIGHTING PLAN – LEVEL P–2
P–E303	LIGHTING PLAN – LEVEL P–3
P–E304	LIGHTING PLAN – LEVEL P–4
P–E401	EMERGENCY PHOTOMETRIC PLAN – LEVEL P–1
P–E402	EMERGENCY PHOTOMETRIC PLAN – LEVEL P–2
P–E403	EMERGENCY PHOTOMETRIC PLAN – LEVEL P–3
P–E404	EMERGENCY PHOTOMETRIC PLAN – LEVEL P–4
P–E500	ELECTRICAL DETAILS
P–E501	ELECTRICAL DETAILS
P–E600	LIGHTING FIXTURE SCHEDULE & TITLE 24

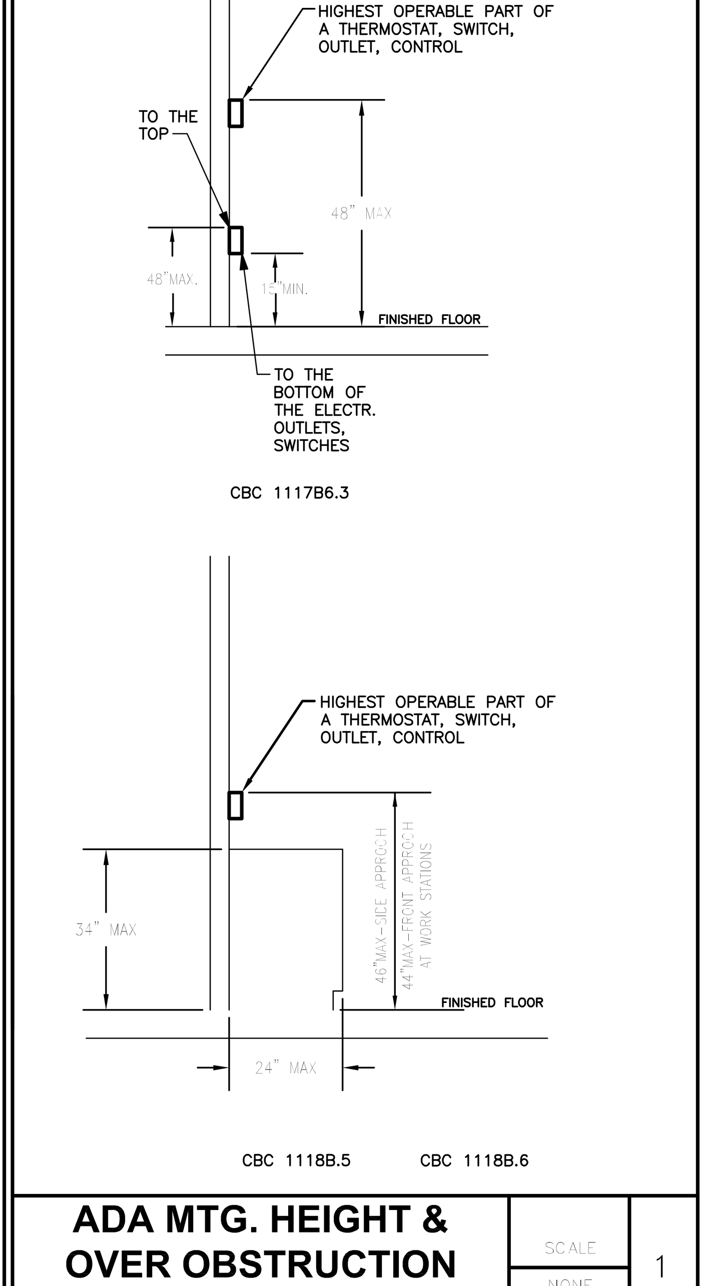

ADA MTG. HEIGHT & OVER OBSTRUCTION DETAIL | SCALE NONE | 1

FIRE ALARM SYSTEM IS DESIGN BUILD. CONTRACTOR SHALL BE RESPONSIBLE FOR TAKING THE DRAWINGS TO THE BUILDING DEPARTMENT AND SUBMITTING DRAWINGS TO THE FIRE DEPARTMENT TO OBTAIN THE NECESSARY PERMIT.

BAYLEY CONSTRUCTION

Bayley Construction
3730 S. Susan St.
Suite 200
Santa Ana, CA. 92704
CA. License 734880
Tel 714-540-8863
Fax 714-556-8863

Bayley Construction
8005 S.E. 28th St.
P.O. Box 9004
Mercer Island, WA. 98040
WA. License BAYLEC034JC
Tel 206-621-8884
Fax 206-343-7728

Pacific Parking DESIGN
6 Venture, Suite 275 949.341.0066 t
Irvine, California 92618 949.341.0099 f

DLR Group WWCOT
Architecture Engineering Planning Interiors
4280 Latham Street, Suite H 951.682.0470 t
Riverside, California 92501 951.682.1801 f

GLUMAC
engineers for a sustainable future
18200 Von Karman Ave., Suite 100
Irvine, CA 92612
T. 949.833.8190 F. 949.833.0252
Job No.: 04.10.00861
Contact: JM/SCW/FN
www.glumac.com

REGISTERED PROFESSIONAL ENGINEER
JONATHAN MITSUMORI, P.E.
No. E10328
Exp. 9-30-12
ELECTRICAL
STATE OF CALIFORNIA

Public Agency Submittal: .
Issued for Bidding: .
Issued for Construction: .

Revisions:
A 09.15.2011 PERMIT SET

NOT FOR CONSTRUCTION

PHASE II:
FOX ENTERTAINMENT PLAZA:
PARKING GARAGE

3605 Market Street,
Riverside, CA 92501

CITY of RIVERSIDE

CITY OF RIVERSIDE
3900 Main Street, Riverside, CA 92522

Phase: Plan Check
Revised .
PPD Project № 10-101

Electrical Lead Sheet

Issued Date: 05.02.2011
Drawn By: -
Checked By: -

P- E000

Sheet №

COPPER FEEDER SCHEDULE

FEEDER TAG	CONDUITS ④			CONDUCTORS PER SET		REMARKS
	MET	SETS	RNC	PHASE/NEUTRAL	GROUND	
3000.4	3.50"	8	4.00"	(4) 500 KCMIL	400 KCMIL	–
3000.3	3.00"	8	4.00"	(3) 500 KCMIL	400 KCMIL	–
2500.4K	3.50"	9	4.00"	(3) 500 KCMIL, (3) 350 KCMIL–N	350 KCMIL	①
2500.4	3.50"	7	4.00"	(4) 500 KCMIL	350 KCMIL	–
2500.3	3.00"	7	4.00"	(3) 500 KCMIL	350 KCMIL	–
2000.4	3.00"	6	4.00"	(4) 400 KCMIL	250 KCMIL	–
2000.3	3.00"	6	4.00"	(3) 400 KCMIL	250 KCMIL	–
1600.4	3.00"	5	4.00"	(4) 400 KCMIL	#4/0	–
1600.3	3.00"	5	4.00"	(3) 400 KCMIL	#4/0	–
1400.4	3.50"	4	4.00"	(4) 500 KCMIL	#4/0	–
1400.3	3.00"	4	4.00"	(3) 500 KCMIL	#4/0	–
1200.4	3.50"	4	4.00"	(4) 350 KCMIL	#3/0	–
1200.3	3.00"	4	4.00"	(3) 350 KCMIL	#3/0	–
1000.4	3.50"	3	4.00"	(4) 400 KCMIL	#2/0	–
1000.3	3.00"	3	4.00"	(3) 400 KCMIL	#2/0	–
800.4K	3.00"	3	4.00"	(3) 400 KCMIL, (2) 300 KCMIL–N	#1/0	①⑤
800.4	3.50"	2	4.00"	(4) 500 KCMIL	#1/0	–
800.3	3.00"	2	4.00"	(3) 500 KCMIL	#1/0	–
700.4	3.50"	2	4.00"	(4) 400 KCMIL	#1/0	–
700.3	3.00"	2	4.00"	(3) 400 KCMIL	#1/0	–
600.4	3.50"	2	4.00"	(4) 350 KCMIL	#1	–
600.3	3.00"	2	4.00"	(3) 350 KCMIL	#1	–
500.4K	3.00"	2	4.00"	(3) 350 KCMIL, (2) 300 KCMIL–N	#2	①
500.4G	3.50"	2	4.00"	(4) 250 KCMIL	(2)#2	–
500.4	3.00"	2	4.00"	(4) 250 KCMIL	#2	–
500.3	2.50"	2	3.00"	(3) 250 KCMIL	#2	–
450.4	3.00"	2	4.00"	(4) #4/0	#2	–
450.3	2.00"	2	2.50"	(3) #4/0	#2	–
400.4K	2.50"	2	3.00"	(3) 250 KCMIL, (2) #4/0–N	#2	①
400.4G	4.00"	1	4.00"	(4) 500 KCMIL	(2)#2	–
400.4	3.50"	1	4.00"	(4) 500 KCMIL	#2	–
400.3	3.00"	1	4.00"	(3) 500 KCMIL	#2	–
350.4	3.00"	1	4.00"	(4) 400 KCMIL	#2	–
350.3	2.50"	1	3.00"	(3) 400 KCMIL	#2	–
300.4	3.00"	1	4.00"	(4) 350 KCMIL	#2	–
300.3	3.00"	1	3.00"	(3) 350 KCMIL	#2	–
250.4K	3.00"	1	4.00"	(3) 350 KCMIL, (2) 300 KCMIL–N	#2	①
250.4G	3.00"	1	3.00"	(4) 250 KCMIL	(2)#2	–
250.4	3.00"	1	3.00"	(4) 250 KCMIL	#2	–
250.3	2.50"	1	3.00"	(3) 250 KCMIL	#2	–
225.4K	2.50"	1	3.00"	(3) 300 KCMIL, (2) 250 KCMIL–N	#2	①
225.4G	3.00"	1	3.00"	(4) #4/0	(2)#2	–
225.4	2.50"	1	3.00"	(4) #4/0	#2	–
225.3M	2.00"	1	2.50"	(3) #4/0	#2	–
225.3	2.00"	1	2.50"	(3) #4/0	#2	–
200.4K	2.50"	1	3.00"	(3) 250 KCMIL, (2) #4/0–N	#6	①
200.4G	2.50"	1	3.00"	(4) #3/0	(2)#2	–
200.4M	2.50"	1	3.00"	(4) #3/0	#2	–
200.4	2.50"	1	3.00"	(4) #3/0	#6	–
200.3	2.00"	1	2.00"	(3) #3/0	#6	–
175.4K	2.50"	1	3.00"	(3) #4/0, (1) #500 KCMIL–N	#6	①
175.4M	2.00"	1	2.50"	(4) #2/0	#2	–
175.4	2.00"	1	2.50"	(4) #2/0	#6	–
175.3M	2.00"	1	2.00"	(3) #2/0	#2	–
175.3	2.00"	1	2.00"	(3) #2/0	#6	–
150.4K	2.50"	1	3.00"	(3) #3/0, (1) #400 KCMIL–N	#6	①
150.4M	2.00"	1	2.00"	(4) #1/0	#2	–
150.4	2.00"	1	2.00"	(4) #1/0	#6	–
150.3M	1.50"	1	2.00"	(3) #1/0	#2	–
150.3	1.50"	1	2.00"	(3) #1/0	#6	–
125.4K	2.00"	1	2.50"	(3) #1/0, (1) #300 KCMIL–N	#6	①
110.4	2.00"	1	2.00"	(4) #1	#6	
110.3	1.50"	1	2.00"	(3) #1	#6	–
100.4M	1.25"	1	1.50"	(4) #2	#6	–
100.4	1.25"	1	1.50"	(4) #2	#8	–
100.3M	1.25"	1	1.50"	(3) #2	#6	–
100.3	1.25"	1	1.50"	(3) #2	#8	–
90.4K	2.00"	1	2.00"	(3) #1, (1)#3/0–N	#8	–
90.4M	1.25"	1	2.00"	(4) #3	#6	–
90.4	1.25"	1	2.00"	(4) #3	#8	–
90.3	1.25"	1	1.50"	(3) #3	#8	–
90.2	1.00"	1	1.50"	(2) #3	#8	–
70.4K	1.50"	1	2.00"	(3) #3, (1)#1/0–N	#8	①
70.4G	1.25"	1	2.00"	(4) #4	(2)#8	–
70.4M	1.25"	1	2.00"	(4) #4	#6	–
70.4	1.25"	1	2.00"	(4) #4	#8	–
70.3M	1.25"	1	1.50"	(3) #4	#6	–
70.3	1.25"	1	1.50"	(3) #4	#8	–
70.2	1.00"	1	1.00"	(2) #4	#8	–
60.4K	1.25"	1	1.50"	(3) #4, (1)#1/0–N	#10	①
60.4	1.25"	1	1.50"	(4) #6	#10	–
60.3M	1.00"	1	1.00"	(3) #6,	#8	–
60.3	1.00"	1	1.00"	(3) #6,	#10	–
60.2	0.75"	1	1.00"	(2) #6,	#10	–
40.4K	1.25"	1	1.50"	(3) #6, (1)#3–N	#10	①
40.4	1.00"	1	1.00"	(4) #8	#10	–
40.3	0.75"	1	1.00"	(3) #8	#10	–
40.2	0.75"	1	1.00"	(2) #8	#10	–
30.4K	1.00"	1	1.50"	(3) #8, (1)#4–N	#10	①
30.4	0.75"	1	1.00"	(4) #10	#10	–
30.3	0.75"	1	1.00"	(3) #10	#10	–
30.2	0.75"	1	1.00"	(2) #10	#10	–
20.4	0.75"	1	1.00"	(4) #12	#12	–
20.3	0.75"	1	1.00"	(3) #12	#12	–
20.2	0.75"	1	1.00"	(2) #12	#12	–

GENERAL NOTES:

A. THIS TABLE IS BASED ON EMT/PVC–40 CONDUITS WITH COPPER CONDUCTORS WITH THHN/THWN INSULATION. FOR OTHER CONDUIT/CONDUCTOR INSULATION COMBINATIONS INCREASE SIZES AS REQUIRED BY NEC.

B. THIS SCHEDULE SHALL BE USED ON ALL FEEDERS SERVING LOADS WHERE THE CIRCUIT BREAKER SIZE MATCHES THE AMPACITY OF ITS FEEDER. WHERE CIRCUIT BREAKER SIZES DO NOT MATCH FEEDER SIZE, INCREASE FEEDER SIZE TO THE NEXT LARGER SIZE. USE THE "MOTOR CIRCUIT SCHEDULE" FOR LOADS, SUCH AS MOTORS, PUMPS, FANS, CHILLERS, ETC., WHERE THE CIRCUIT BREAKER SIZE IS LARGER THAN THE AMPACITY OF ITS FEEDER.

C. PROVIDE NOTED SIZE GROUND CONDUCTOR IN EACH CONDUIT OF FEEDERS CONSISTING OF MULTIPLE SETS OF CONDUCTORS.

D. NOT ALL FEEDERS ARE NECESSARILY USED ON THIS PROJECT.

E. NOMINAL AMPACITIES GREATER THAN 100 AMPS OR #1 AWG WIRE ARE FOR 75°C TERMINATIONS.

SCHEDULE REMARKS:

① OVERSIZED (173% MIN.) NEUTRAL FOR K–4 OR HIGHER RATED XFRS AND 80% DERATED CONDUCTORS FOR 4+ CURRENT CARRYING CONDUCTORS.
② NOT USED.
③ NOT USED.
④ "RNC"= PVC 40, PVC 80 OR FIBERGLASS TYPE CONDUITS ROUTED UNDERGROUND. REFER TO SIZING ON DRAWINGS IF "RNC" CONDUITS ARE ROUTED ABOVEGROUND. CONDUIT SIZES NOTED ON SINGLE–LINE DIAGRAM OR ON PLANS SUPERSEDE SIZES NOTED ABOVE IF LARGER.
⑤ FEEDERS LARGER THAN 800.4K ARE CUSTOM DESIGNED.

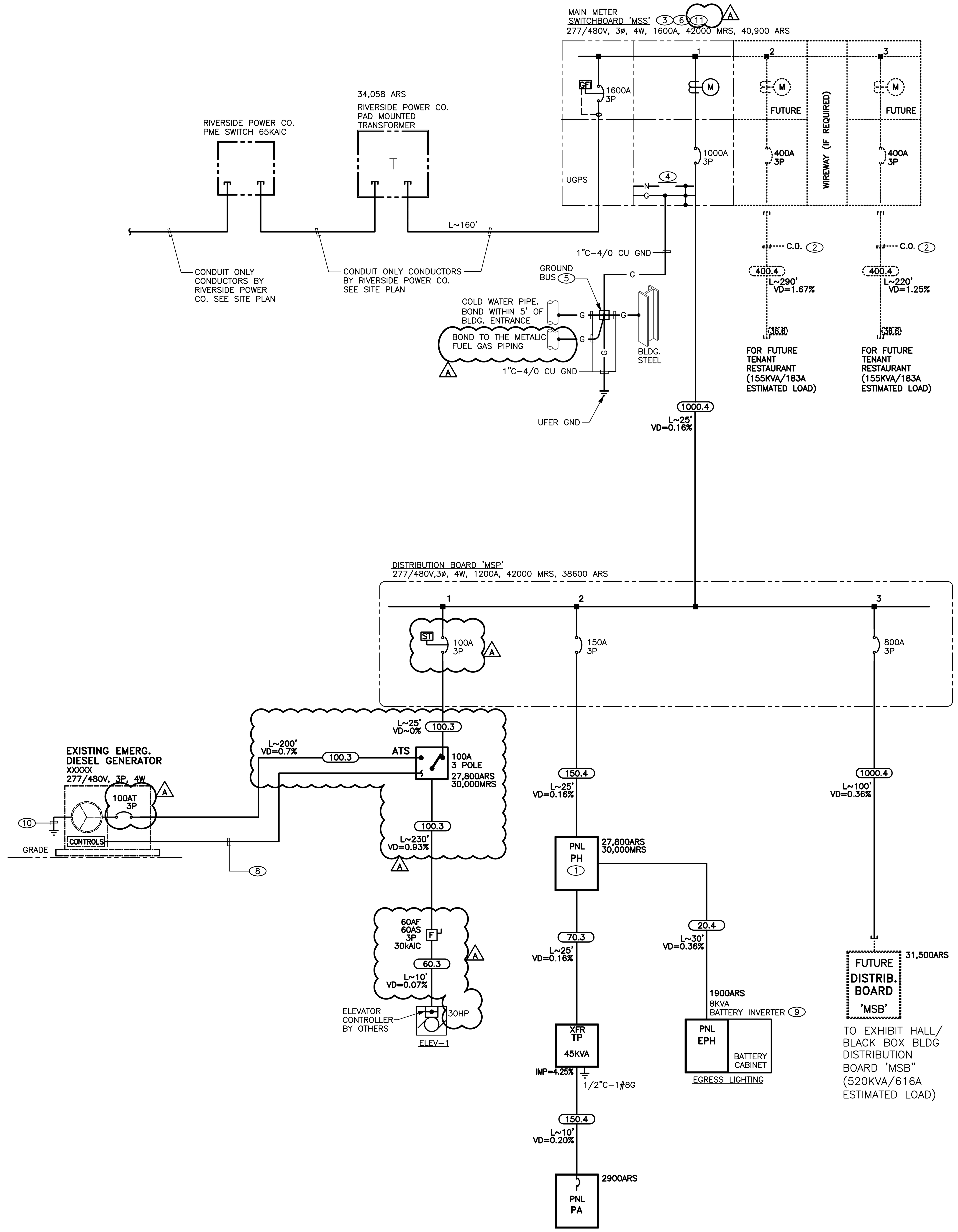

SINGLE LINE DIAGRAM

SINGLE LINE DIAGRAM NOTES:

① PROVIDE SERIES RATED EQUIPMENT.
② PROVIDE C.O. FOR FUTURE TENANT.
③ PROVIDE UL LISTED FULLY RATED EQUIPMENT WITH SHORT CIRCUIT RATING EXCEEDING THE CALCULATED AVAILABLE SHORT CIRCUIT CURRENT (INCLUDING MOTOR LOAD).
④ NEUTRAL BUS LINK.
⑤ SEE GROUND BUS DETAIL ON DWG.
⑥ COORDINATE SERVICE CONNECTION WITH RIVERSIDE POWER CO.
⑦ PROVIDE AUTOMATIC TRANSFER SWITCH.
⑧ 1"C (MIN) AND CONTROL WIRING, VERIFY REQUIRMENTS WITH MANUFACTURER INSTALLATION DRAWINGS FOR ATS.
⑨ PROVIDE 8KVA INVERTER WITH 90 MIN BATTERY BACK UP. MYERS ILLUMINATOR CIII SERIES.
⑩ 1"C–#4/0 CU GND TO BUILDING SERVICE GROUND, SEE DETAILS.
⑪ THE SWITCHGEAR SHALL CONFORM WITH EUSERC/CITY OF RIVERSIDE REQUIREMENTS. PRIOR TO MANUFACTURING, THE MAIN SWITCHGEAR DRAWINGS SHALL BE APPROVED BY THE CITY OF RIVERSIDE, PUBLIC UTILITIES ELECTRICAL DIVISION. ELECTRICAL CONTRACTOR SHALL SEND SEVEN ORIGINAL APPROVAL DRAWING TO: UTILITY INSPECTOR, ELECTRICAL ENGINEERING 3901 ORANGE STREET, RIVERSIDE, CA 92522.

ARS= AVAILABLE RMS SYMMETRICAL AMPERE
MRS= MINIMUM RMS SYMMETRICAL AMPERE (EQUIPMENT RATING)

(M)= FURNISHED & INSTALLED BY MECH. CONTRACTOR

LOAD SCHEDULE 'MSP'

CKT	LOAD	AMPS
1	ELEVATOR	52
2	PANEL 'PH'	82
3	EXHIBIT HALL–BLACK BOX	616
	TOTAL AMPS	750

LOAD SCHEDULE 'MSS'

CKT	LOAD	AMPS
1	MSP	772
2	RESTAURANT	183
3	RESTAURANT	183
	TOTAL AMPS	1138

Bayley Construction
3730 S. Susan St.
Suite 200
Santa Ana, CA. 92704
CA. License 734880
Tel 714-540-8863
Fax 714-556-8863

Bayley Construction
8005 S.E. 28th St.
P.O. Box 9004
Mercer Island, WA. 98040
WA. License BAYLEC034JC
Tel 206-621-8884
Fax 206-343-7728

BAYLEY CONSTRUCTION

Pacific Parking DESIGN
6 Venture, Suite 275, Irvine, California 92618 — 949.341.0066 t, 949.341.0099 f

DLR Group WWCOT
Architecture Engineering Planning Interiors
4280 Latham Street, Suite H, Riverside, California 92501 — 951.682.0470 t, 951.682.1801 f

GLUMAC
engineers for a sustainable future™
18200 Von Karman Ave., Suite 100, Irvine, CA 92612
T. 949.833.8190 F. 949.833.0252
Job No.: 04.10.00861
Contact: JM/SCW/FN
www.glumac.com

REGISTERED PROFESSIONAL ENGINEER — JONATHAN MITSUMORI, P.E. — No. E10328 Exp. 9-30-12 — ELECTRICAL — STATE OF CALIFORNIA

Public Agency Submittal: .
Issued for Bidding: .
Issued for Construction: .

Revisions:
A 09.15.2011 PERMIT SET

NOT FOR CONSTRUCTION

PHASE II: FOX ENTERTAINMENT PLAZA: PARKING GARAGE

3605 Market Street,
Riverside, CA 92501

CITY of RIVERSIDE

3900 Main Street, Riverside, CA 92522

Phase: Plan Check
Revised .
PPD Project № 10-101

Single Line Diagram

Issued Date: 05.02.2011
Drawn By: -
Checked By: -

P- E001

Sheet №

ALL CIRCUITS SHARING THE SAME NEUTRAL SHALL BE TIED TOGETHER WITH A TIE BREAKER HANDLE PER NEC 2008 210.4(B)

POLE NO.	C.B. AMP/P	SERVICE	LOAD KVA TOTAL	TYPE	A	B	C	TYPE	TOTAL	SERVICE	C.B. AMP/P	POLE No.
1	20/1	REC – TELEPHONE BOARD	0.36	R	0.86			L	0.50	SIGN	20/1	2
3	20/1	REC – TELEPHONE BOARD	0.36	R		0.86		L	0.50	SIGN	20/1	4
5	20/1	REC – TELEPHONE ROOM	0.18	R			0.48	L	0.30	ELEVATOR ROOM LIGHT/REC	20/1	6
7	20/1	GARAGE GATE	0.60	M	1.60			M	1.00	ELEVATOR CONTROLLER	20/1	8
9	20/1	GARAGE GATE	0.60	M		0.90		L	0.30	ELEV. MACHINE RM. LIGHT/REC	20/1	10
11	20/1	GARAGE GATE	0.60	M			1.30	L	0.70	ELEVATOR LIGHTS/FAN	20/1	12
13	20/1	GARAGE GATE	0.60	M	0.78			R	0.18	UILITY RM RECEPT	20/1	14
15	20/1	GARAGE GATE	0.60	M		1.32		R	0.72	REC – GARAGE S.E.	20/1	16
17	20/1	GARAGE GATE	0.60	M			2.94	A	2.34	CU–1	20/2	18
19	20/1	RECEPT FOR MECH EQ	0.18	R	2.52			A	2.34			20
21	20/1	SPARE				0.22		A	0.22	EF–1	15/1	22
23	20/1	SPARE					0.36	R	0.36	REC – ELEC. RM., RESTROOM	20/1	24
25	20/1	SPARE			0.60			A	0.60	EF–2,3	20/1	26
27	20/1	SPARE				0.54		E	0.54	REC – STORAGE ROOM	20/1	28
29	20/1	SPARE					0.18	A	0.18	FC–1	20/2	30
31	20/1	SPARE			0.18			A	0.18			32
33	20/1	SPARE				0.00				SPARE	20/1	34
35	20/1	SPARE					0.00			SPARE	20/1	36
37	20/1	SPARE			0.00					SPARE	20/1	38
39	20/1	SPARE				0.00				SPARE	20/1	40
41	20/1	SPARE					0.00			SPARE	20/1	42
		CONNECTED LOAD PER PHASE			6.54	3.84	5.26					

LOAD SUMMARY	CONN. KVA	DEMAND FACTOR	DEMAND KVA
TYPE "L": CONTINUOUS LOADS	2.30	125%	2.88
TYPE "R": RECEPTACLES (FIRST 10KVA)	2.34	100%	2.34
TYPE "R": RECEPTACLES (OVER 10KVA)	0.00	50%	0.00
TYPE "M": MISCELLANEOUS LOADS	4.60	100%	4.60
TYPE "A": AC LOADS	5.86	100%	5.86
TYPE "K": KITCHEN LOADS	0.00	65%	0.00
LARGEST MOTOR LOAD		25%	0.00
TOTAL	15.64		15.68

VOLTS: 120/208V,3PH,4W
MAIN C.B.: 150 AMP
BUS: 225 AMP
POLES: 42
MOUNTING: SURFACE
AIC RATING: 10,000

DEMAND AMPS: 44

PANEL **PA**

ALL CIRCUITS SHARING THE SAME NEUTRAL SHALL BE TIED TOGETHER WITH A TIE BREAKER HANDLE PER NEC 2008 210.4(B)

POLE NO.	C.B. AMP/P	SERVICE	LOAD KVA TOTAL	TYPE	A	B	C	TYPE	TOTAL	SERVICE	C.B. AMP/P	POLE No.
1			2.66	M	4.58			L	1.92	LTG – 1ST LEVEL PERIMETER	20/1	2
3	20/3	BOOSTER PUMP BP–1	2.66	M		3.28		L	0.62	LTG – 1ST LEVEL INTERIOR	20/1	4
5			2.66	M			3.96	L	1.30	LTG – 2ND LEVEL PERIMETER, WEST	20/1	6
7	20/1	SPARE			1.49			L	1.49	LTG – 2ND LEVEL PERIMETER, EAST	20/1	8
9	20/1	SPARE				1.05		L	1.05	LTG – 2ND LEVEL INTERIOR	20/1	10
11	20/1	SPARE					1.30	L	1.30	LTG – 3RD LEVEL PERIMETER, WEST	20/1	12
13	20/1	SPARE			1.49			L	1.49	LTG – 3RD LEVEL PERIMETER, EAST	20/1	14
15	20/1	SPARE				0.99		L	0.99	LTG – 3RD LEVEL INTERIOR	20/1	16
17	20/1	SPARE					2.76	L	2.76	LTG – ROOF POLES	20/1	18
19	20/1	SPARE			1.49			L	1.49	LTG – 1ST LEVEL STOR. RM	20/1	20
21	20/1	SPARE				0.19		L	0.19	LTG – 1ST LEVEL ELEC. RM.	20/1	22
23	20/1	SPARE					3.00	M	3.00	ROLL–UP DOORS	20/1	24
25	20/1	SPARE			0.00					SPARE	20/1	26
27	20/1	SPARE				0.00				SPARE	20/1	28
29	20/1	SPARE					0.00			SPARE	20/1	30
31	20/1	SPARE			0.00					SPARE	20/1	32
33	20/1	SPARE				0.00				SPARE	20/1	34
35	20/1	SPARE					0.00			SPARE	20/1	36
37			6.54	–	9.05			L	2.50			38
39	70/3	PANEL 'PA'	3.84	–		5.20		L	1.36	PANEL 'EPH'	20/3	40
41			5.26	–			6.87	L	1.61			42
		CONNECTED LOAD PER PHASE			18.09	10.71	17.89					

LOAD SUMMARY	CONN. KVA	DEMAND FACTOR	DEMAND KVA
TYPE "L": CONTINUOUS LOADS	25.36	125%	31.70
TYPE "R": RECEPTACLES (FIRST 10KVA)	2.34	100%	2.34
TYPE "R": RECEPTACLES (OVER 10KVA)	0.00	50%	0.00
TYPE "M": MISCELLANEOUS LOADS	15.57	100%	15.57
TYPE "A": AC LOADS	5.86	100%	5.86
TYPE "K": KITCHEN LOADS	0.00	65%	0.00
LARGEST MOTOR LOAD		25%	0.00
TOTAL	46.69		55.47

VOLTS: 277/480V,3PH,4W
MAIN C.B.: M.L.O.
BUS: 150A
POLES: 42
MOUNTING: SURFACE
AIC RATING: 30,000 SERIES RATED

DEMAND AMPS: 67

PANEL **PH**

ALL CIRCUITS SHARING THE SAME NEUTRAL SHALL BE TIED TOGETHER WITH A TIE BREAKER HANDLE PER NEC 2008 210.4(B)

POLE NO.	C.B. AMP/P	SERVICE	LOAD KVA TOTAL	TYPE	A	B	C	TYPE	TOTAL	SERVICE	C.B. AMP/P	POLE No.
1	20/1	EMER. LTG – 1ST FLOOR	1.30	L	1.30					SPARE	20/1	2
3	20/1	EMER. LTG – 2ND FLOOR	1.36	L		1.36				SPARE	20/1	4
5	20/1	EMER. LTG – 3RD FLOOR	1.61	L			1.61			SPARE	20/1	6
7	20/1	EMER. LTG – ROOF POLES	1.20	L	1.20					SPARE	20/1	8
		CONNECTED LOAD PER PHASE			2.50	1.36	1.61					

LOAD SUMMARY	CONN. KVA	DEMAND FACTOR	DEMAND KVA
TYPE "L": CONTINUOUS LOADS	5.48	125%	6.85
TYPE "R": RECEPTACLES (FIRST 10KVA)	0.00	100%	0.00
TYPE "R": RECEPTACLES (OVER 10KVA)	0.00	50%	0.00
TYPE "M": MISCELLANEOUS LOADS	0.00	100%	0.00
TYPE "A": AC LOADS	0.00	100%	0.00
TYPE "K": KITCHEN LOADS	0.00	65%	0.00
LARGEST MOTOR LOAD		25%	0.00
TOTAL	5.48		6.85

VOLTS: 277/480V,3PH,4W
MAIN C.B.: M.L.O.
BUS: 100 AMP
POLES: 8
MOUNTING: SURFACE
AIC RATING: 10,000

DEMAND AMPS: 8

PANEL **EPH**

MAIN SWITCHBOARD 'MSS'
277/480 VOLT – 3PH – 4W
LOCATION: GND FLR MAIN ELEC RM
1,600 AMP BUS (65kAIC)

MOUNTED: WALL / X FLOOR — 1600A MB

Circuit No	Circuit Description	kVA Per Phase: Phase A	Phase B	Phase C	Circuit Description	No
1	DISTRIBUTION BOARD ('MSP')	205.83	198.45	205.63	SPACE	2
3	SPACE				SPACE	4
5	SPACE				SPACE	6
7	SPACE				SPACE	8
9	SPACE				SPACE	10
11	SPACE				SPACE	12
13	SPACE				SPACE	14
15	SPACE				SPACE	16
17	SPACE				SPACE	18
19	SPACE				SPACE	20
21	SPACE				SPACE	22
23	SPACE				SPACE	24
	CONNECTED LOAD PER PHASE	205.83	198.45	205.63		

LOAD SUMMARY	CONN. KVA	DEMAND FACTOR	DEMAND KVA
TYPE "L": CONTINUOUS LOADS	25.36	125%	31.70
TYPE "R": RECEPTACLES (FIRST 10KVA)	2.34	100%	2.34
TYPE "R": RECEPTACLES (OVER 10KVA)	0.00	50%	0.00
TYPE "M": MISCELLANEOUS LOADS	578.78	100%	578.78
TYPE "A": AC LOADS	5.86	100%	5.86
TYPE "K": KITCHEN LOADS	0.00	65%	0.00
LARGEST MOTOR LOAD	43.21	25%	10.80
TOTAL	655.55		629.48

DEMAND AMPS: 757

DISTRIBUTION BOARD 'MSP'
277/480 VOLT – 3PH – 4W
LOCATION: GND FLR MAIN ELEC RM
1,200 AMP BUS (65kAIC)

MOUNTED: WALL / X FLOOR — 1200A MB

Circuit No	Circuit Description	kVA Per Phase: Phase A	Phase B	Phase C	Circuit Description	No
1	ELEV–1	14.40	14.40	14.40		
		18.09	10.71	17.89	PANEL 'PH'	2
3	FUTURE DISTRIBUTION BOARD ('MSB')	173.33	173.33	173.33		4
5	SPACE				SPACE	6
7	SPACE				SPACE	8
9	SPACE				SPACE	10
11	SPACE				SPACE	12
	CONNECTED LOAD PER PHASE	205.83	198.45	205.63		

LOAD SUMMARY	CONN. KVA	DEMAND FACTOR	DEMAND KVA
TYPE "L": CONTINUOUS LOADS	25.36	125%	31.70
TYPE "R": RECEPTACLES (FIRST 10KVA)	2.34	100%	2.34
TYPE "R": RECEPTACLES (OVER 10KVA)	0.00	50%	0.00
TYPE "M": MISCELLANEOUS LOADS	578.78	100%	578.78
TYPE "A": AC LOADS	5.86	100%	5.86
TYPE "K": KITCHEN LOADS	0.00	65%	0.00
LARGEST MOTOR LOAD	43.21	25%	10.80
TOTAL	655.55		629.48

DEMAND AMPS: 757

FUTURE DISTRIBUTION BOARD 'MSB'
277/480 VOLT – 3PH – 4W
LOCATION: BLACK BOX BUILDING
800 AMP BUS

MOUNTED: WALL / X FLOOR — 800A MB

Circuit No	Circuit Description	kVA Per Phase: Phase A	Phase B	Phase C	Circuit Description	No
1	ESTIMATED FUTURE LOAD	173.33	173.33	173.33	SPACE	2
3	SPACE				SPACE	4
5	SPACE				SPACE	6
7	SPACE				SPACE	8
9	SPACE				SPACE	10
11	SPACE				SPACE	12
	CONNECTED LOAD PER PHASE	173.33	173.33	173.33		

LOAD SUMMARY	CONN. KVA	DEMAND FACTOR	DEMAND KVA
TYPE "L": CONTINUOUS LOADS	0.00	125%	0.00
TYPE "R": RECEPTACLES (FIRST 10KVA)	0.00	100%	0.00
TYPE "R": RECEPTACLES (OVER 10KVA)	0.00	50%	0.00
TYPE "M": MISCELLANEOUS LOADS	520.00	100%	520.00
TYPE "A": AC LOADS	0.00	100%	0.00
TYPE "K": KITCHEN LOADS	0.00	65%	0.00
LARGEST MOTOR LOAD	0.00	25%	0.00
TOTAL	520.00		520.00

DEMAND AMPS: 625

Bayley Construction
3730 S. Susan St.
Suite 200
Santa Ana, CA. 92704
CA. License 734880
Tel 714-540-8863
Fax 714-556-8863

Bayley Construction
8005 S.E. 28th St.
P.O. Box 9004
Mercer Island, WA. 98040
WA. License BAYLEC034JC
Tel 206-621-8884
Fax 206-343-7728

BAYLEY CONSTRUCTION

Pacific Parking DESIGN
6 Venture, Suite 275 949.341.0066 t
Irvine, California 92618 949.341.0099 f

DLR Group WWCOT
Architecture Engineering Planning Interiors
4280 Latham Street, Suite H 951.682.0470 t
Riverside, California 92501 951.682.1801 f

GLUMAC
engineers for a sustainable future
18200 Von Karman Ave., Suite 100
Irvine, CA 92612
T. 949.833.8190 F. 949.833.0252
Job No.: 04.10.00861
Contact: JM/SCW/FN
www.glumac.com

REGISTERED PROFESSIONAL ENGINEER
JONATHAN MITSUMORI, P.E.
No. E10328
Exp. 9-30-12
ELECTRICAL
STATE OF CALIFORNIA

Public Agency Submittal: .
Issued for Bidding: .
Issued for Construction: .

Revisions:
A 09.15.2011 PERMIT SET

NOT FOR CONSTRUCTION

PHASE II: FOX ENTERTAINMENT PLAZA: PARKING GARAGE

3605 Market Street,
Riverside, CA 92501

CITY of RIVERSIDE

3900 Main Street, Riverside, CA 92522

Phase: Plan Check
Revised .
PPD Project № 10-101

Panel Schedules

Issued Date: 05.02.2011
Drawn By: -
Checked By: -

P- E002

Sheet №

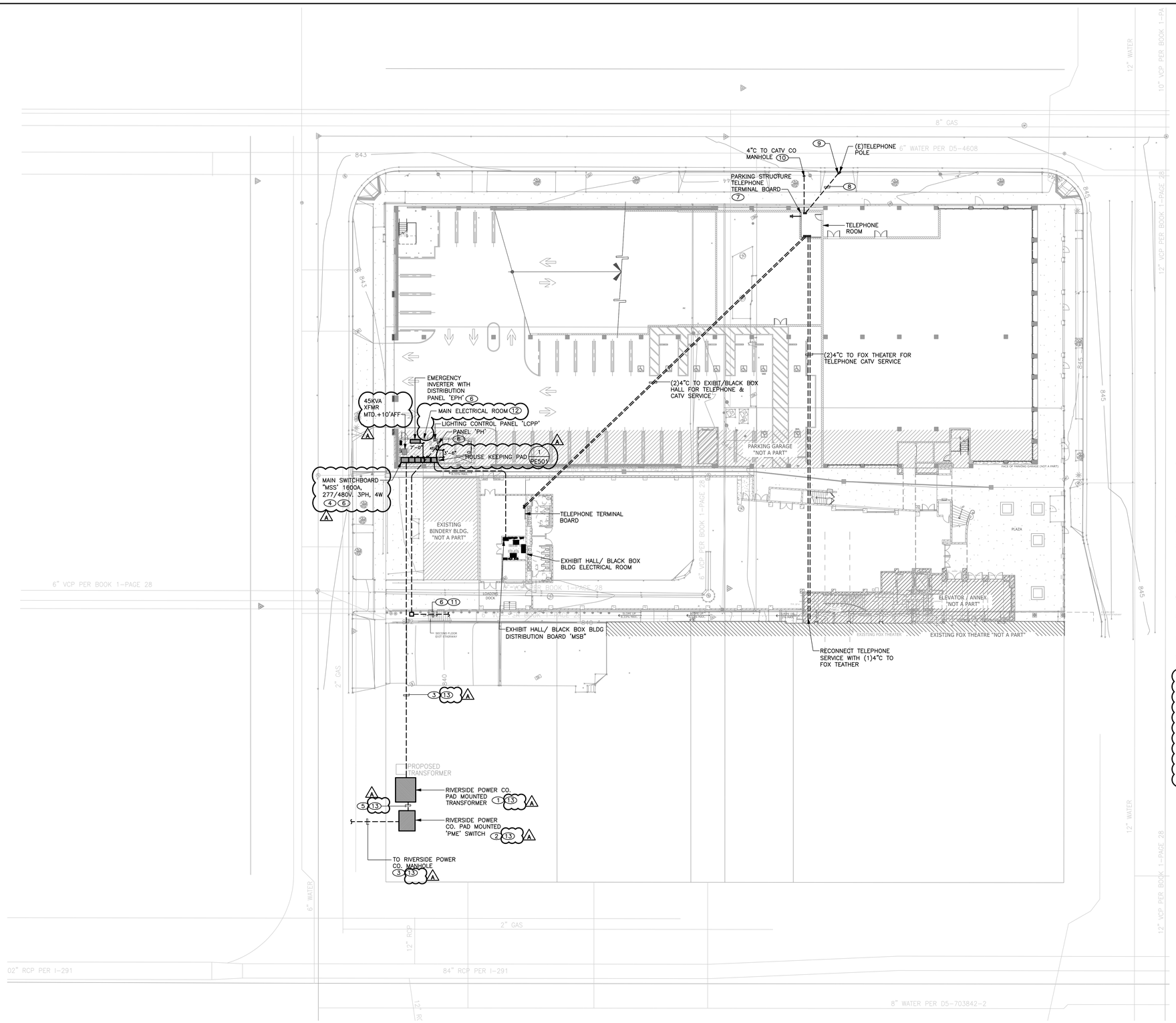

SITE PLAN GENERAL NOTES:

1. THE CONTRACTOR SHALL EXERCISE CAUTION WHILE EXCAVATING AND TRENCHING ON THE SITE TO AVOID EXISTING DUCTS, PIPING, CONDUITS, ETC., TO PREVENT HAZARD TO PERSONNEL AND/OR DAMAGE TO EXISTING UNDERGROUND UTILITIES OR STRUCTURES. THE ENGINEER IS NOT RESPONSIBLE FOR THE LOCATION OF UNDERGROUND UTILITIES OR STRUCTURES, WHETHER SHOWN OR NOT. THE CONTRACTOR SHALL IMMEDIATELY NOTIFY THE OWNER SHOULD SUCH UNIDENTIFIED CONDITIONS BE DISCOVERED.

2. CONTRACTOR SHALL OBTAIN POWER COMPANY, CATV AND TELEPHONE COMPANY CONSTRUCTION DRAWINGS PRIOR TO CONSTRUCTION AND SHALL INSTALL POWER, CATV AND TELEPHONE CONDUIT AND STRUCTURES ACCORDING TO RESPECTIVE POWER COMPANY DRAWINGS, CATV AND TELEPHONE COMPANY DRAWINGS.

3. UTILITY POINTS OF SERVICE AND WORK/MATERIAL SHOWN ARE BASED ON PRELIMINARY INFORMATION ONLY BY THE UTILITY COMPANIES AND FOR BID PURPOSES ONLY.

4. CONTRACTOR SHALL COORDINATE WITH UTILITY COMPANY FOR FINAL AND EXACT WORK/MATERIAL REQUIREMENTS AND CONSTRUCT TO UTILITY COMPANY ENGINEERING PLANS & SPECIFICATIONS ONLY. CONTRACTOR SHALL FURNISH AND INSTALL ALL CONDUIT, PULL WIRES, CABLES, PULLBOXES, CONCRETE ENCASED OF CONDUIT (IF REQUIRED), TRANSFORMER PAD, BARRIER'S, POLE RISERS, TRENCHING/BACKFILL AND UTILITY COMPANY FEES AS REQUESTED BY UTILITY COMPANY AND INCLUDE ALL REQUIREMENTS IN BID AND SCOPE OF WORK.

5. FOLLOW UTILITY COMPANY MIN. BENDING RADIUS REQUIREMENT FOR CONDUIT INSTALLATION. INSTALL ADDITIONAL PULL BOX AS REQUIRED.

6. THE CONTRACTOR SHALL VERIFY WITH LANDSCAPE ARCHITECT/CONTRACTOR EXACT LOCATION OF TREES, THEN INSTALL UNDERGROUND CONDUITS TO MISS ROOT SYSTEMS.

7. CONTRACTOR SHALL COORDINATE SITE DISTRIBUTION SYSTEMS INSTALLED WITH SEWER, WATER AND GAS. REFER TO CIVIL DRAWINGS PRIOR TO BID AND INCLUDE ALL COSTS TO COORDINATE CONDUIT AND STRUCTURES INSTALLATION WITH OTHER UTILITIES.

8. WHERE PVC 40 CONDUIT IS INSTALLED UNDERGROUND, PROVIDE ADDITIONAL GROUND WIRE (NOT SHOWN), SIZE PER CODE REQUIREMENTS.

9. MINIMUM BRANCH CIRCUIT WIRING FOR UNDERGROUND INSTALLATION SHALL BE #10 AWG WIRE IN 1" CONDUIT.

10. FINAL PLACEMENT OF ALL LANDSCAPE LIGHTING FIXTURES SHALL BE DONE UNDER DIRECTION OF LANDSCAPE ARCHITECT.

11. AIM ALL LIGHT FIXTURES (IF REQUIRED) AT NIGHT AS DIRECTED BY OWNER.

12. CONTRACTOR SHALL DO ALL NECESSARY EXCAVATION AND BACKFILL.

13. FURNISH AND INSTALL TYPE "EB" POLYVINYL CHLORIDE SCHEDULE 40 PVC PIPE.

14. FURNISH AND INSTALL A 200 POUNDS TEST POLYOLEFIN PULL WIRE CAT. NO 232 OR EQUIVALENT IN ALL CONDUITS.

SHEET NOTES:

1. PROVIDE 10'X12' PRECAST PAD WITH PULL BOX FOR PAD MOUNTED TRANSFORMER PER "RIVERSIDE PUBLIC UTILITIES (RPU)" REQUIREMENT. SEE GENERAL NOTES ON DWG AND OBTAIN "RPU" DETAIL DWGS. VERIFY SIZE PRIOR TO INSTALLATION.
2. PROVIDE 6'X9' 'PME' SWITCH PAD PER 'RPU' REQUIREMENTS. OBTAIN DETAIL DWGS FROM 'RPU', PRIOR TO INSTALLATION.
3. PROVIDE CONDUITS PER UTILITY COMPANY SPECIFICATION.
4. COORDINATE SERVICE CONNECTION WITH UTILITY COMPANY.
5. PROVIDE SERVICE CONDUITS PER "RPU" SERVICE AND EXTEND TO TRANSFORMER PAD.
6. SEE SINGLE LINE DIAGRAM FOR EQUIPMENT SIZES.
7. PROVIDE PLYWOOD TELEPHONE BACKBOARD. SEE DWG P-E2.1 FOR REQUIREMENTS.
8. PROVIDE (1)4" PVC C.O. FROM TELEPHONE POLE TO TELEPHONE TERMINAL BOARD.
9. PROVIDE POLE RISER 4" GALVANIZED STEEL CONDUIT. COORDINATE REQUIREMENTS WITH TELEPHONE COMPANY.
10. PROVIDE (1)4"C.O. FROM THE CATV MANHOLE TO THE TELEPHONE TERMINAL BOARD. COORDINATE REQUIREMENTS WITH CATV COMPANY.
11. TO EXISTING EMERGENCY GENERATOR LOCATED AT THE FOX THEATER, SEE SINGLE LINE DIAGRAM P-E0.1 FOR SIZE AND REQUIREMENTS.
12. ELECTRICAL METER ROOM SHALL HAVE SCHLAGE LOCK, KEYED TO RIVERSIDE PUBLIC UTILITIES MASTER KEY, OR SHALL HAVE DOUBLE HASP. WORKING SPACE NEAR THE METER PANEL PER 2002 NEC 110-26 IS REQUIRED. THE MOUNTING HEIGHT OF THE ELECTRICAL METERS SHALL BE BETWEEN 48 AND 75 INCHES ABOVE THE WORKSPACE FLOOR AREA REQUIRED BY NEC 110-26. ELECTRICAL ROOM DOOR OPENING SHALL EXTEND TO OR ABOVE THE FULL HEIGHT OF THE SWITCHGEAR. A
13. THE ELECTRICAL UTILITY STRUCTURES SHOWN ARE FOR PERMIT APPLICATION PURPOSE ONLY AND DOES NOT CONSTITUTE THE FINAL DESIGN. CONTRACTOR SHALL COORDINATE WITH THE CITY OF RIVERSIDE, PUBLIC UTILITIES ELECTRICAL DIVISION (951-826-5489) FOR ACTUAL CONSTRUCTION PLANS, SPECIFICATION AND SERVICE CHANGES. COORDINATE WITH THE UTILITY INSPECTOR (951-826-2415) PRIOR TO INSTALLATION OF FACILITIES AND BACKFILLING.

Utility Co. Contact

Company Name:	RIVERSIDE PUBLI UTILITIES
Address:	3901 Orange St.
	Riverside, CA 92501
Contact:	Steven S. Johal
Telephone No.:	(951) 826-5830
	sjohal@riversideca.gov

Utility Co. Contact

Company Name:	TELEPHONE
Address:	--
	RIVERSIDE
Contact:	--
Telephone No.:	--

Utility Co. Contact

Company Name:	CATV
Address:	--
	RIVERSIDE
Contact:	--
Telephone No.:	--

PROJECT NORTH

0' 10' 20' 40' 80'

ELECTRICAL SITE PLAN

Scale 1" = 20'-0"

1

Bayley Construction
3730 S. Susan St.
Suite 200
Santa Ana, CA, 92704
CA. License 734880
Tel 714-540-8863
Fax 714-556-8863

Bayley Construction
8005 S.E. 28th St.
P.O. Box 9004
Mercer Island, WA. 98040
WA. License BAYLEC034JC
Tel 206-621-8884
Fax 206-343-7728

Pacific Parking DESIGN
6 Venture, Suite 275 949.341.0066 t
Irvine, California 92618 949.341.0099 f

DLR Group WWCOT
Architecture Engineering Planning Interiors
4280 Latham Street, Suite H 951.682.0470 t
Riverside, California 92501 951.682.1801 f

GLUMAC
engineers for a sustainable future
18200 Von Karman Ave., Suite 100
Irvine, CA 92612
T. 949.833.8180 F. 949.833.0252
Job No.: 04.10.00861
Contact: JM/SCW/FN
www.glumac.com

REGISTERED PROFESSIONAL ENGINEER
JONATHAN MITSUNOBU FUJII
No. E10328
Exp. 9-30-12
ELECTRICAL
STATE OF CALIFORNIA

Public Agency Submittal: .
Issued for Bidding: .
Issued for Construction: .

Revisions:

A 09.15.2011 PERMIT SET

NOT FOR CONSTRUCTION

PHASE II: FOX ENTERTAINMENT PLAZA: PARKING GARAGE

3605 Market Street,
Riverside, CA 92501

CITY of RIVERSIDE

CITY OF RIVERSIDE

3900 Main Street, Riverside, CA 92522

Phase: Plan Check
Revised .
PPD Project № 10-101

Electrical Site Plan

Issued Date: 05.02.2011
Drawn By: -
Checked By: -

P- E100

Sheet №

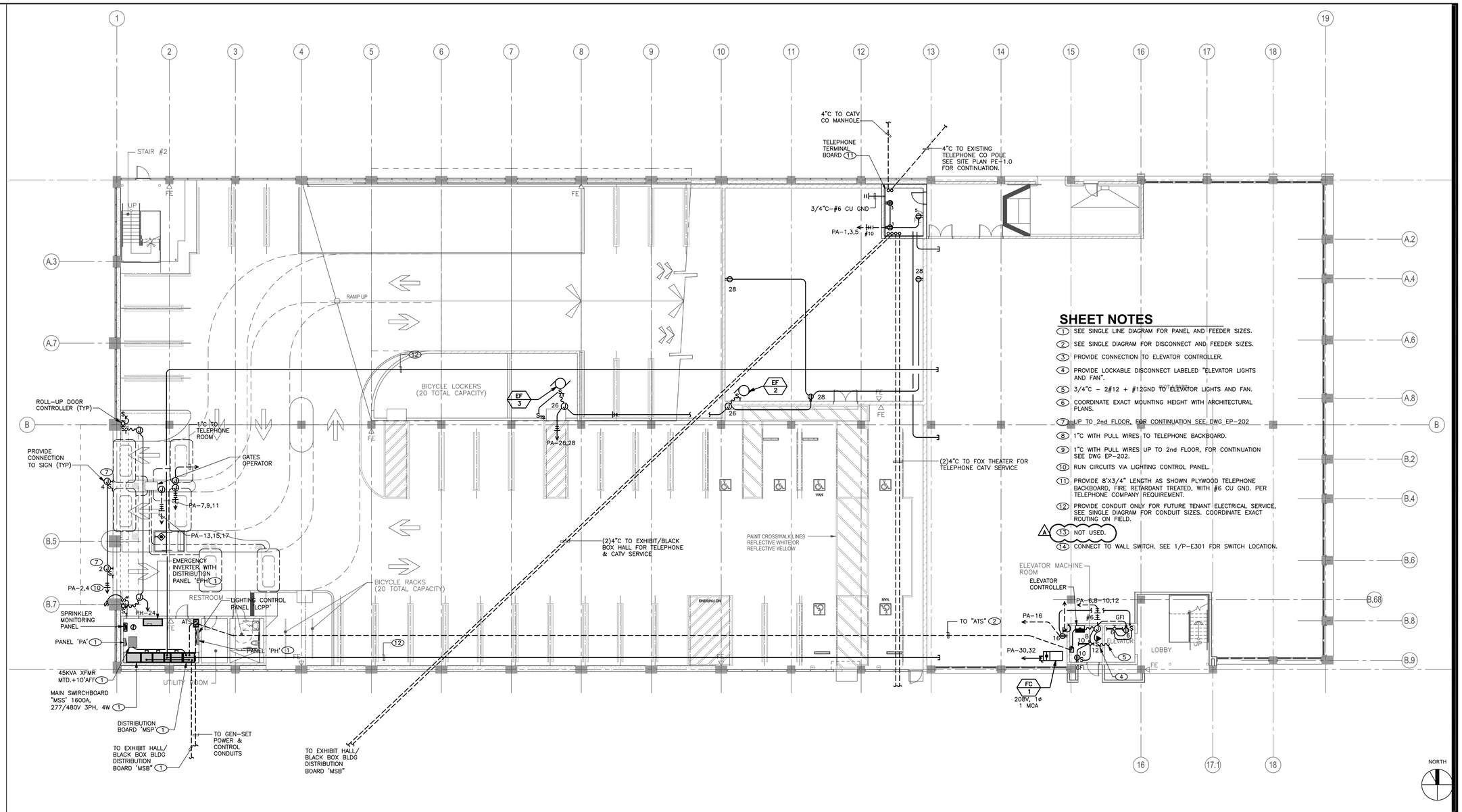

SHEET NOTES

1. SEE SINGLE LINE DIAGRAM FOR PANEL AND FEEDER SIZES.
2. SEE SINGLE DIAGRAM FOR DISCONNECT AND FEEDER SIZES.
3. PROVIDE CONNECTION TO ELEVATOR CONTROLLER.
4. PROVIDE LOCKABLE DISCONNECT LABELED "ELEVATOR LIGHTS AND FAN".
5. 3/4"C – 2#12 + #12GND TO ELEVATOR LIGHTS AND FAN.
6. COORDINATE EXACT MOUNTING HEIGHT WITH ARCHITECTURAL PLANS.
7. UP TO 2nd FLOOR, FOR CONTINUATION SEE DWG EP-202
8. 1"C WITH PULL WIRES TO TELEPHONE BACKBOARD.
9. 1"C WITH PULL WIRES UP TO 2nd FLOOR, FOR CONTINUATION SEE DWG EP-202.
10. RUN CIRCUITS VIA LIGHTING CONTROL PANEL.
11. PROVIDE 8'X3/4" LENGTH AS SHOWN PLYWOOD TELEPHONE BACKBOARD, FIRE RETARDANT TREATED, WITH #6 CU GND. PER TELEPHONE COMPANY REQUIREMENT.
12. PROVIDE CONDUIT ONLY FOR FUTURE TENANT ELECTRICAL SERVICE, SEE SINGLE DIAGRAM FOR CONDUIT SIZES. COORDINATE EXACT ROUTING ON FIELD.
13. NOT USED.
14. CONNECT TO WALL SWITCH. SEE 1/P-E301 FOR SWITCH LOCATION.

ELECTRICAL PARKING GARAGE LEVEL P-1 POWER PLAN

Scale 3/32"= 1'-0" (1)

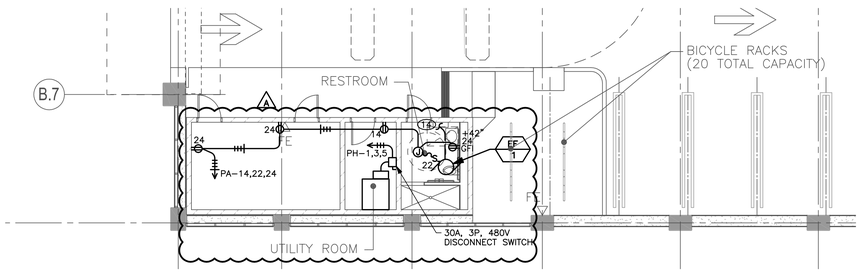

ELECTRICAL PARKING GARAGE LEVEL P-1 - ENLARGED PLAN

Scale 1/8"= 1'-0" (3)

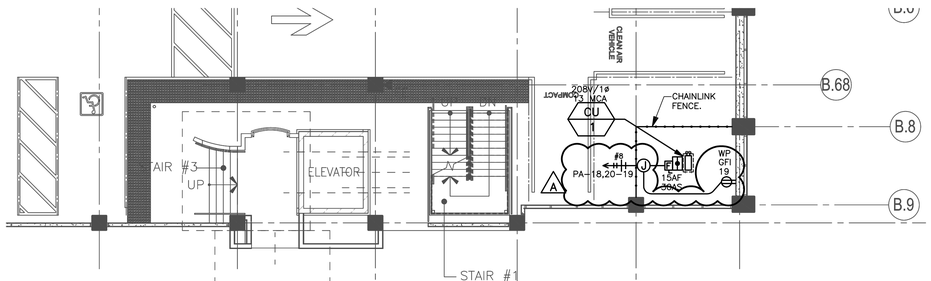

ELECTRICAL PARKING GARAGE LEVEL P-2 POWER PLAN

Scale 1/8"= 1'-0" (2)

Bayley Construction
3730 S. Susan St.
Suite 200
Santa Ana, CA, 92704
CA. License 734880
Tel 714-540-8863
Fax 714-556-8863

Bayley Construction
8005 S.E. 28th St.
P.O. Box 9004
Mercer Island, WA. 98040
WA. License BAYLEC034JC
Tel 206-621-8884
Fax 206-343-7728

Pacific Parking DESIGN
6 Venture, Suite 275 949.341.0066 t
Irvine, California 92618 949.341.0099 f

DLR Group WWCOT
Architecture Engineering Planning Interiors
4280 Latham Street, Suite H 951.682.0470 t
Riverside, California 92501 951.682.1801 f

GLUMAC
engineers for a sustainable future
18200 Von Karman Ave., Suite 100
Irvine, CA 92612
T. 949.833.8180 F. 949.833.0252
Job No.: 04.10.00861
Contact: JM/SCW/FN
www.glumac.com

REGISTERED PROFESSIONAL ENGINEER
JONATHAN MITSUNOBU SUTTLE
No. E10328
Exp. 9-30-12
ELECTRICAL
STATE OF CALIFORNIA

Public Agency Submittal:
Issued for Bidding:
Issued for Construction:

Revisions:

A 09.15.2011 PERMIT SET

NOT FOR CONSTRUCTION

PHASE II: FOX ENTERTAINMENT PLAZA: PARKING GARAGE

3605 Market Street,
Riverside, CA 92501

CITY of RIVERSIDE

CITY OF RIVERSIDE

3900 Main Street, Riverside, CA 92522

Phase: Plan Check
Revised -
PPD Project № 10-101

Power Plan - Level P-1

Issued Date: 05.02.2011
Drawn By: -
Checked By: -

P- E201

Sheet №

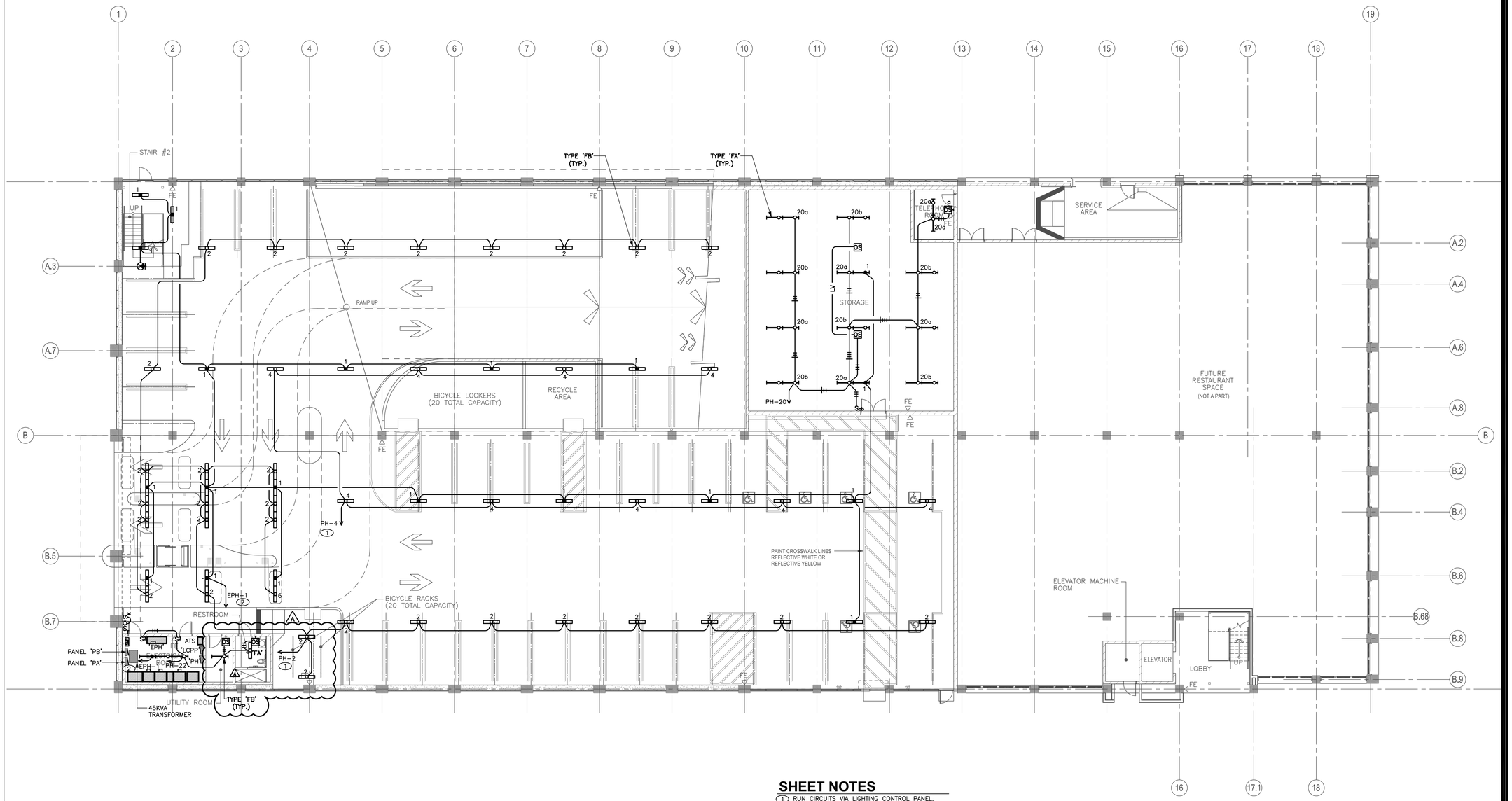

SHEET NOTES

1. RUN CIRCUITS VIA LIGHTING CONTROL PANEL.
2. COMBINE HOME-RUNS PRIOR TO CONNECTING TO PANELBOARD.

NORTH

ELECTRICAL PARKING GARAGE LEVEL P-1

Scale 3/32"= 1'-0"

1

Bayley Construction
3730 S. Susan St.
Suite 200
Santa Ana, CA, 92704
CA. License 734880
Tel 714-540-8863
Fax 714-556-8863

Bayley Construction
8005 S.E. 28th St.
P.O. Box 9004
Mercer Island, WA. 98040
WA. License BAYLEC034JC
Tel 206-621-8884
Fax 206-343-7728

BAYLEY CONSTRUCTION

Pacific Parking DESIGN
6 Venture, Suite 275 949.341.0066 t
Irvine, California 92618 949.341.0099 f

DLR Group WWCOT
Architecture Engineering Planning Interiors
4280 Latham Street, Suite H 951.682.0470 t
Riverside, California 92501 951.682.1801 f

GLUMAC
engineers for a sustainable future
18200 Von Karman Ave., Suite 100
Irvine, CA 92612
T. 949.833.8180 F. 949.833.0252
Job No.: 04.10.00861
Contact: JM/SCW/FN
www.glumac.com

REGISTERED PROFESSIONAL ENGINEER
JONATHAN MITSUNOBU, P.E.
No. E10328
Exp. 9-30-12
ELECTRICAL
STATE OF CALIFORNIA

Public Agency Submittal:
Issued for Bidding:
Issued for Construction:

#	Revisions:
A	09.15.2011 PERMIT SET

NOT FOR CONSTRUCTION

PHASE II: FOX ENTERTAINMENT PLAZA: PARKING GARAGE

3605 Market Street,
Riverside, CA 92501

CITY of RIVERSIDE

CITY OF RIVERSIDE

3900 Main Street, Riverside, CA 92522

Phase: Plan Check
Revised .
PPD Project № 10-101

Lighting Plan - Level P-1

Issued Date: 05.02.2011
Drawn By: -
Checked By: -

P- E301

Sheet №

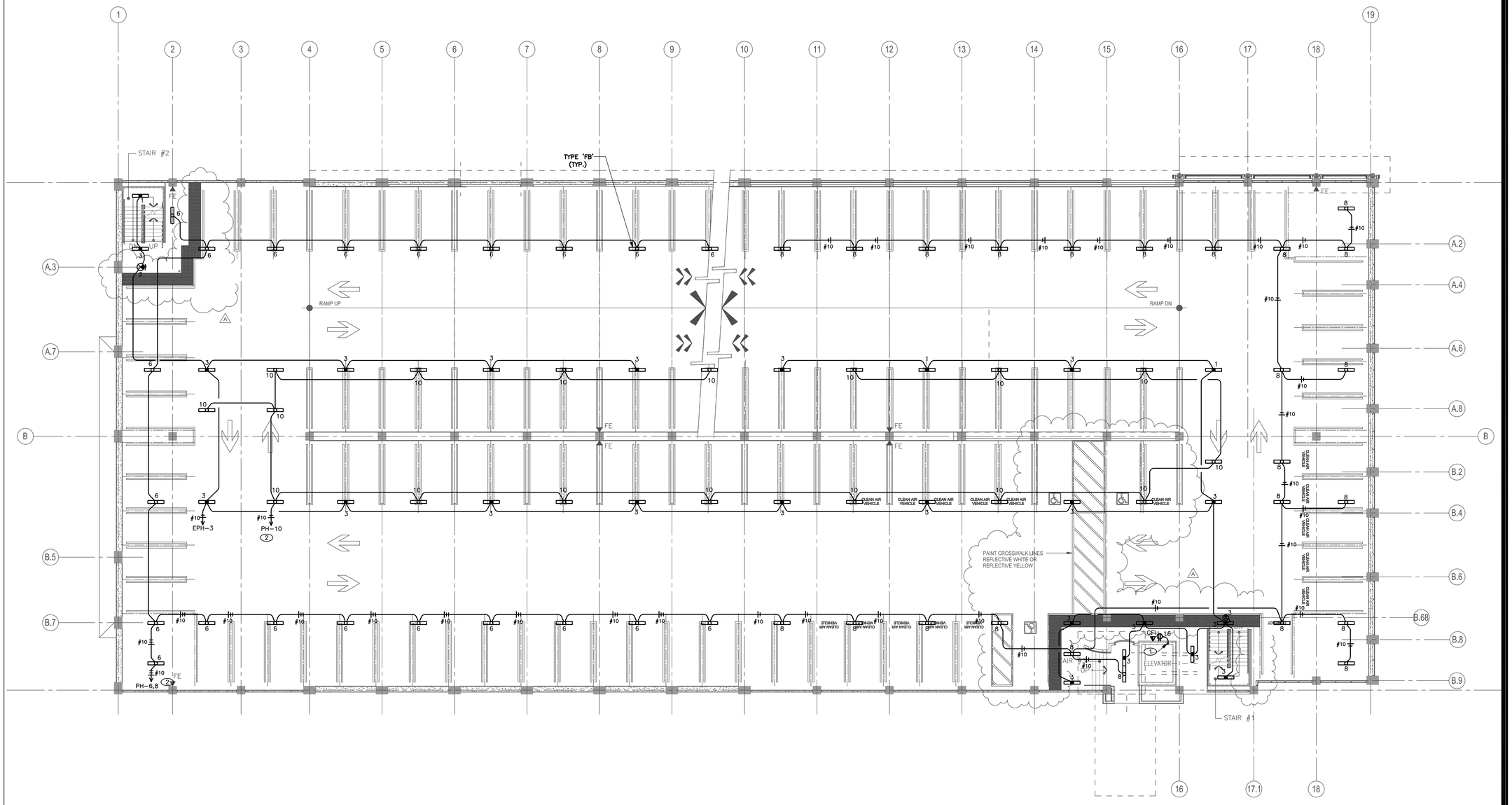

SHEET NOTES

1. DOWN TO LEVEL P-1.
2. RUN CIRCUITS VIA LIGHTING CONTROL PANEL.

ELECTRICAL PARKING GARAGE LEVEL P-2

Scale 3/32"= 1'-0"

Bayley Construction
3730 S. Susan St.
Suite 200
Santa Ana, CA, 92704
CA. License 734880
Tel 714-540-8863
Fax 714-556-8863

Bayley Construction
8005 S.E. 28th St.
P.O. Box 9004
Mercer Island, WA. 98040
WA. License BAYLEC034JC
Tel 206-621-8884
Fax 206-343-7728

Pacific Parking DESIGN
6 Venture, Suite 275 949.341.0066 t
Irvine, California 92618 949.341.0099 f

DLR Group WWCOT
Architecture Engineering Planning Interiors
4280 Latham Street, Suite H 951.682.0470 t
Riverside, California 92501 951.682.1801 f

GLUMAC
engineers for a sustainable future
18200 Von Karman Ave., Suite 100
Irvine, CA 92612
T. 949.833.8180 F. 949.833.0252
Job No.: 04.10.00861
Contact: JM/SCW/FN
www.glumac.com

REGISTERED PROFESSIONAL ENGINEER
JONATHAN MITSUNOBU - FUJII
No. E10328
Exp. 9-30-12
ELECTRICAL
STATE OF CALIFORNIA

Public Agency Submittal:
Issued for Bidding:
Issued for Construction:

Revisions:

A 09.15.2011 PERMIT SET

NOT FOR CONSTRUCTION

PHASE II: FOX ENTERTAINMENT PLAZA: PARKING GARAGE

3605 Market Street,
Riverside, CA 92501

CITY of RIVERSIDE

CITY OF RIVERSIDE

3900 Main Street, Riverside, CA 92522

Phase: Plan Check
Revised -
PPD Project № 10-101

Lighting Plan - Level P-2

Issued Date: 05.02.2011
Drawn By: -
Checked By: -

P- E302

Sheet №

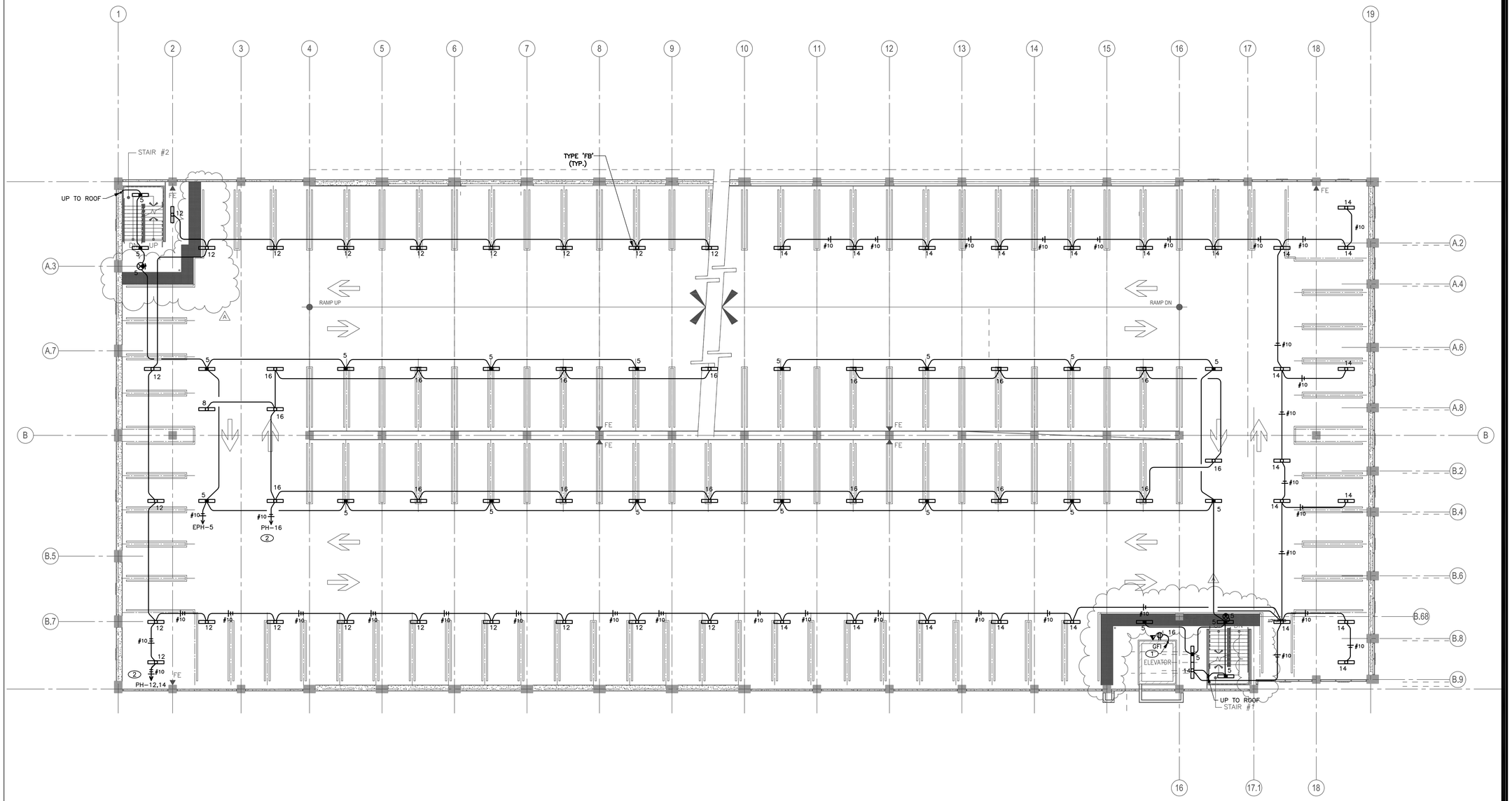

SHEET NOTES

1. DOWN TO LEVEL P-1.
2. RUN CIRCUITS VIA LIGHTING CONTROL PANEL.

NORTH

ELECTRICAL PARKING GARAGE LEVEL P-3

Scale 3/32"= 1'-0"

Bayley Construction
3730 S. Susan St.
Suite 200
Santa Ana, CA, 92704
CA. License 734880
Tel 714-540-8863
Fax 714-556-8863

Bayley Construction
8005 S.E. 28th St.
P.O. Box 9004
Mercer Island, WA. 98040
WA. License BAYLEC034JC
Tel 206-621-8884
Fax 206-343-7728

BAYLEY CONSTRUCTION

Pacific Parking DESIGN
6 Venture, Suite 275 949.341.0066 t
Irvine, California 92618 949.341.0099 f

DLR Group WWCOT
Architecture Engineering Planning Interiors
4280 Latham Street, Suite H 951.682.0470 t
Riverside, California 92501 951.682.1801 f

GLUMAC
engineers for a sustainable future
18200 Von Karman Ave., Suite 100
Irvine, CA 92612
T. 949.833.8190 F. 949.833.0252
Job No.: 04.10.00861
Contact: JM/SCW/FN
www.glumac.com

REGISTERED PROFESSIONAL ENGINEER
JONATHAN MITSUNOBU - FUJII
No. E10328
Exp. 9-30-12
ELECTRICAL
STATE OF CALIFORNIA

Public Agency Submittal:
Issued for Bidding:
Issued for Construction:

#	Revisions:
A	09.15.2011 PERMIT SET

NOT FOR CONSTRUCTION

PHASE II: FOX ENTERTAINMENT PLAZA: PARKING GARAGE

3605 Market Street,
Riverside, CA 92501

CITY of RIVERSIDE

CITY OF RIVERSIDE

3900 Main Street, Riverside, CA 92522

Phase: Plan Check
Revised .
PPD Project № 10-101

Lighting Plan - Level P-3

Issued Date: 05.02.2011
Drawn By: -
Checked By: -

P- E303

Sheet №

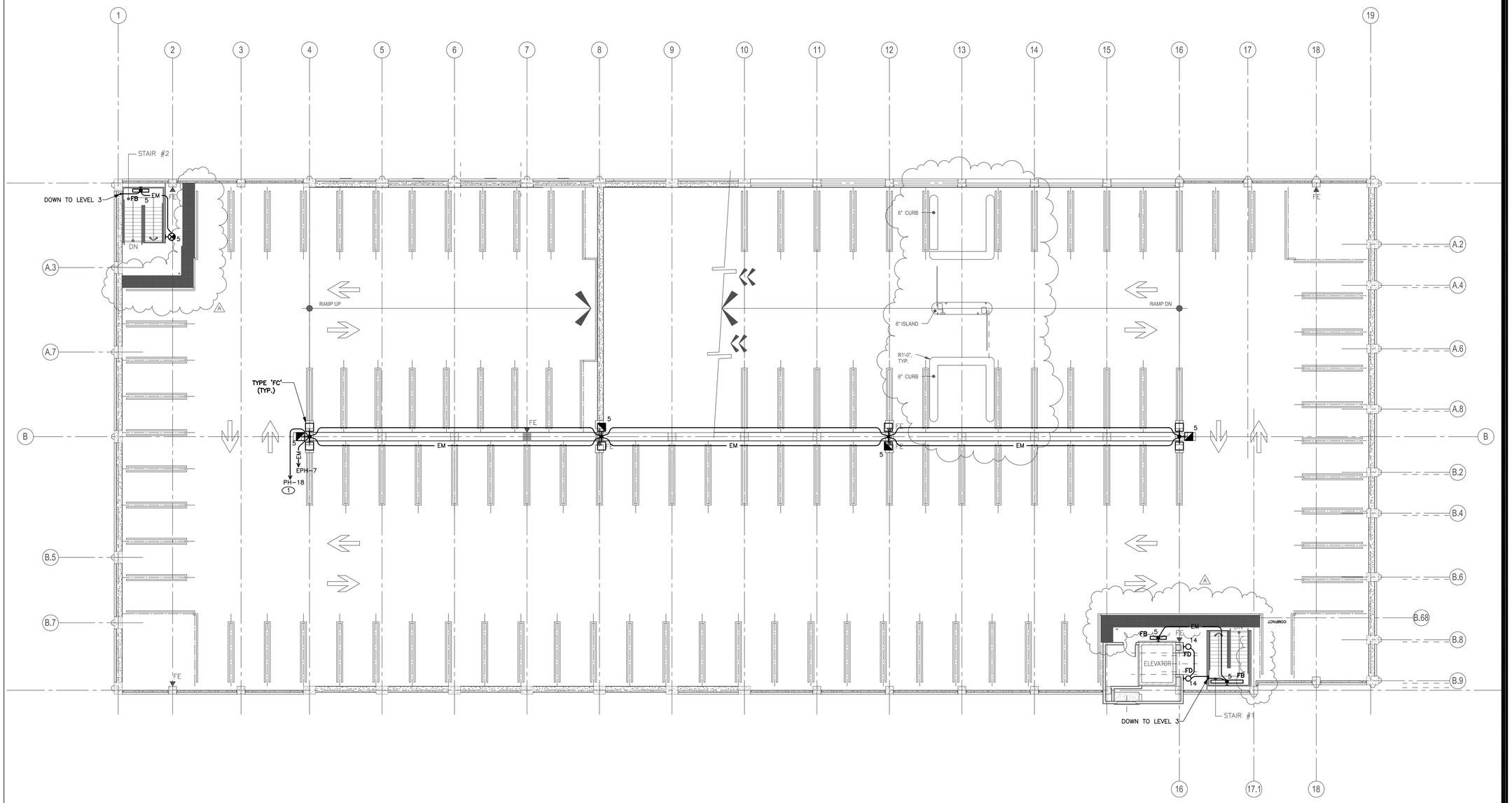

SHEET NOTES

1. RUN CIRCUITS VIA LIGHTING CONTROL PANEL.

NORTH

ELECTRICAL PARKING GARAGE LEVEL P-4

Scale 3/32"= 1'-0"

1

Bayley Construction
3730 S. Susan St.
Suite 200
Santa Ana, CA, 92704
CA. License 734880
Tel 714-540-8863
Fax 714-556-8863

Bayley Construction
8005 S.E. 28th St.
P.O. Box 9004
Mercer Island, WA. 98040
WA. License BAYLEC034JC
Tel 206-621-8884
Fax 206-343-7728

BAYLEY CONSTRUCTION

Pacific Parking DESIGN
6 Venture, Suite 275 949.341.0066 t
Irvine, California 92618 949.341.0099 f

DLR Group WWCOT
Architecture Engineering Planning Interiors
4280 Latham Street, Suite H 951.682.0470 t
Riverside, California 92501 951.682.1801 f

GLUMAC
engineers for a sustainable future
18200 Von Karman Ave., Suite 100
Irvine, CA 92612
T. 949.833.8190 F. 949.833.0252
Job No.: 04.10.00861
Contact: JM/SCW/FN
www.glumac.com

REGISTERED PROFESSIONAL ENGINEER
JONATHAN MITSUNOBU FUJII
No. E10328
Exp. 9-30-12
ELECTRICAL
STATE OF CALIFORNIA

Public Agency Submittal:
Issued for Bidding:
Issued for Construction:

#	Revisions:
A	09.15.2011 PERMIT SET

NOT FOR CONSTRUCTION

PHASE II: FOX ENTERTAINMENT PLAZA: PARKING GARAGE

3605 Market Street,
Riverside, CA 92501

CITY of RIVERSIDE

CITY OF RIVERSIDE

3900 Main Street, Riverside, CA 92522

Phase: Plan Check
Revised -
PPD Project № 10-101

Lighting Plan - Level P-4

Issued Date: 05.02.2011
Drawn By: -
Checked By: -

P- E304

Sheet №

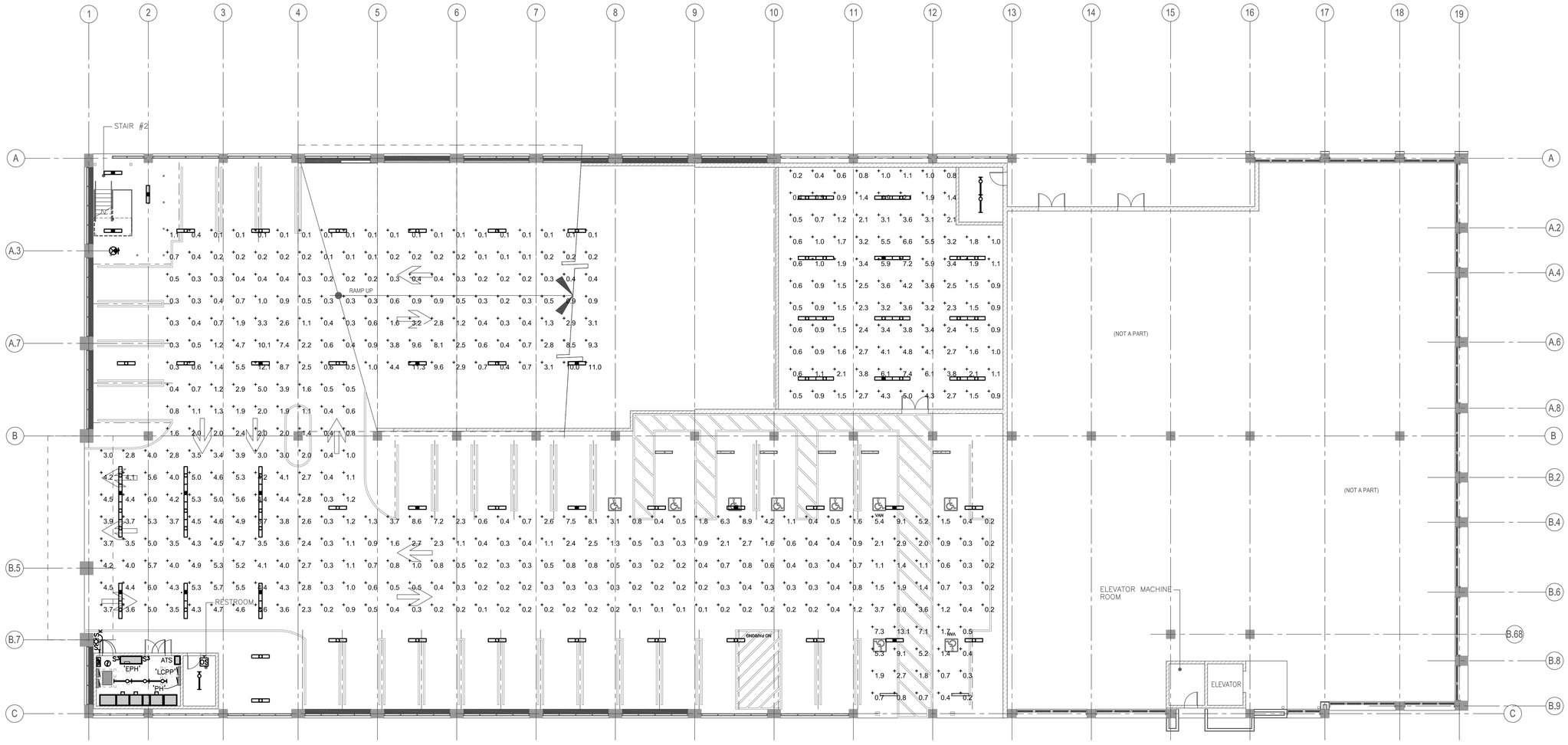

ELECTRICAL PARKING GARAGE LEVEL P-1

NORTH

Scale 3/32"= 1'-0"

1

Bayley Construction
3730 S. Susan St.
Suite 200
Santa Ana, CA, 92704
CA. License 734880
Tel 714-540-8863
Fax 714-556-8863

Bayley Construction
8005 S.E. 28th St.
P.O. Box 9004
Mercer Island, WA. 98040
WA. License BAYLEC034JC
Tel 206-621-8884
Fax 206-343-7728

BAYLEY CONSTRUCTION

Pacific Parking DESIGN
6 Venture, Suite 275 949.341.0066 t
Irvine, California 92618 949.341.0099 f

DLR Group WWCOT
Architecture Engineering Planning Interiors
4280 Latham Street, Suite H 951.682.0470 t
Riverside, California 92501 951.682.1801 f

GLUMAC
engineers for a sustainable future
18200 Von Karman Ave., Suite 100
Irvine, CA 92612
T. 949.833.8180 F. 949.833.0252
Job No.: 04.10.00861
Contact: JM/SCW/FN
www.glumac.com

REGISTERED PROFESSIONAL ENGINEER
JONATHAN MITSUNOBU
No. E10328
Exp. 9-30-12
ELECTRICAL
STATE OF CALIFORNIA

Public Agency Submittal: .
Issued for Bidding: .
Issued for Construction: .

Revisions:

A 09.15.2011 PERMIT SET

NOT FOR CONSTRUCTION

PHASE II: FOX ENTERTAINMENT PLAZA: PARKING GARAGE

3605 Market Street,
Riverside, CA 92501

CITY of RIVERSIDE

CITY OF RIVERSIDE

3900 Main Street, Riverside, CA 92522

Phase: Plan Check
Revised .
PPD Project № 10-101

Emergency Photometric Plan - Level P-1

Issued Date: 05.02.2011
Drawn By: -
Checked By: -

P- E401

Sheet №

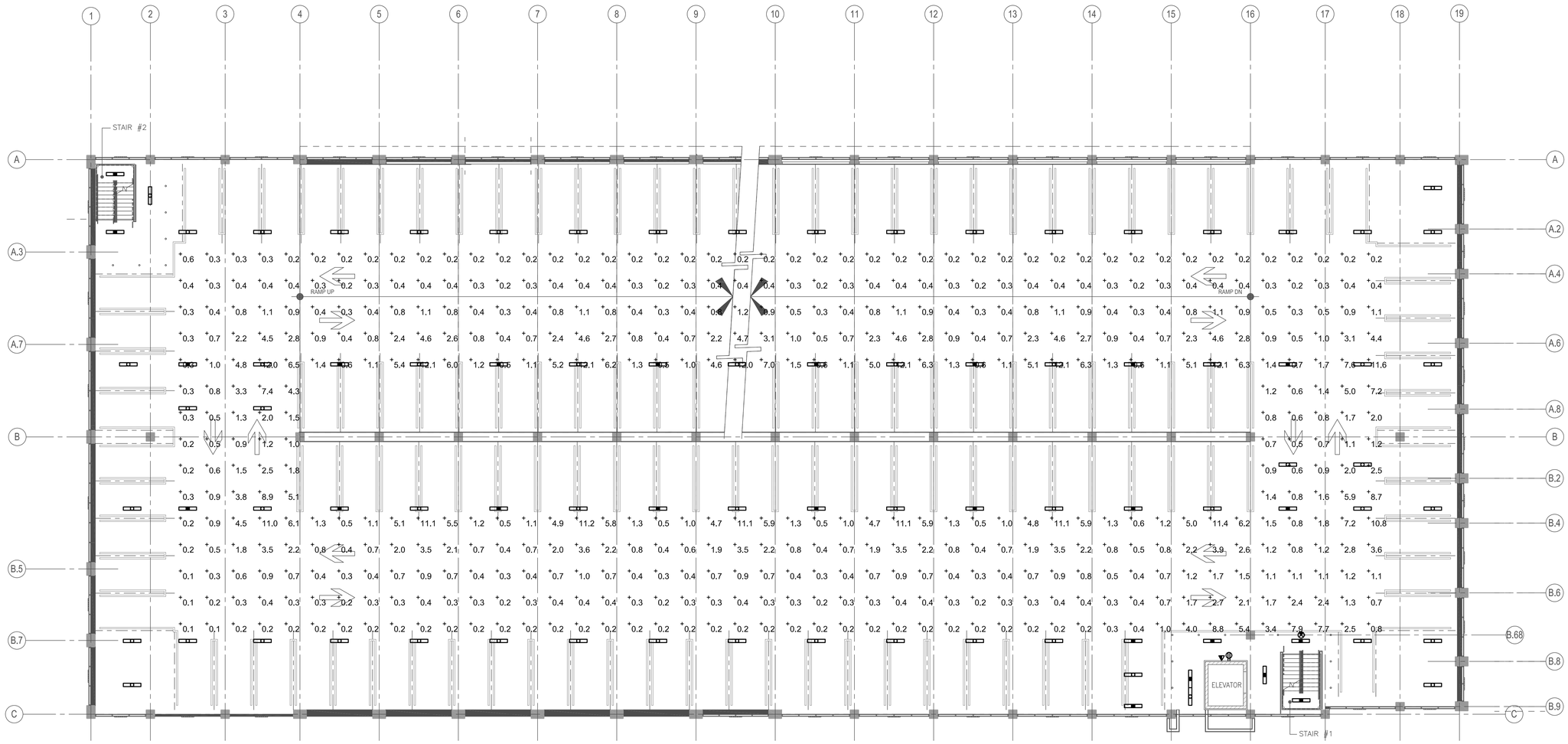

ELECTRICAL PARKING GARAGE LEVEL P-2

Scale 3/32"= 1'-0"

1

Bayley Construction
3730 S. Susan St.
Suite 200
Santa Ana, CA, 92704
CA. License 734880
Tel 714-540-8863
Fax 714-556-8863

Bayley Construction
8005 S.E. 28th St.
P.O. Box 9004
Mercer Island, WA. 98040
WA. License BAYLEC034JC
Tel 206-621-8884
Fax 206-343-7728

BAYLEY CONSTRUCTION

Pacific Parking DESIGN

6 Venture, Suite 275 949.341.0066 t
Irvine, California 92618 949.341.0099 f

DLR Group WWCOT
Architecture Engineering Planning Interiors

4280 Latham Street, Suite H 951.682.0470 t
Riverside, California 92501 951.682.1801 f

GLUMAC
engineers for a sustainable future

18200 Von Karman Ave., Suite 100
Irvine, CA 92612
T. 949.833.8190 F. 949.833.0252
Job No.: 04.10.00861
Contact: JM/SCW/FN
www.glumac.com

REGISTERED PROFESSIONAL ENGINEER
No. E20828
Exp. 9-30-12
ELECTRICAL
STATE OF CALIFORNIA

Public Agency Submittal: .
Issued for Bidding: .
Issued for Construction: .

#	Revisions:
A	09.15.2011 PERMIT SET

NOT FOR CONSTRUCTION

PHASE II: FOX ENTERTAINMENT PLAZA: PARKING GARAGE

3605 Market Street,
Riverside, CA 92501

CITY of RIVERSIDE

CITY OF RIVERSIDE

3900 Main Street, Riverside, CA 92522

Phase: Plan Check
Revised .
PPD Project № 10-101

Emergency Photometric Plan - Level P-2

Issued Date: 05.02.2011
Drawn By: -
Checked By: -

P- E402

Sheet №

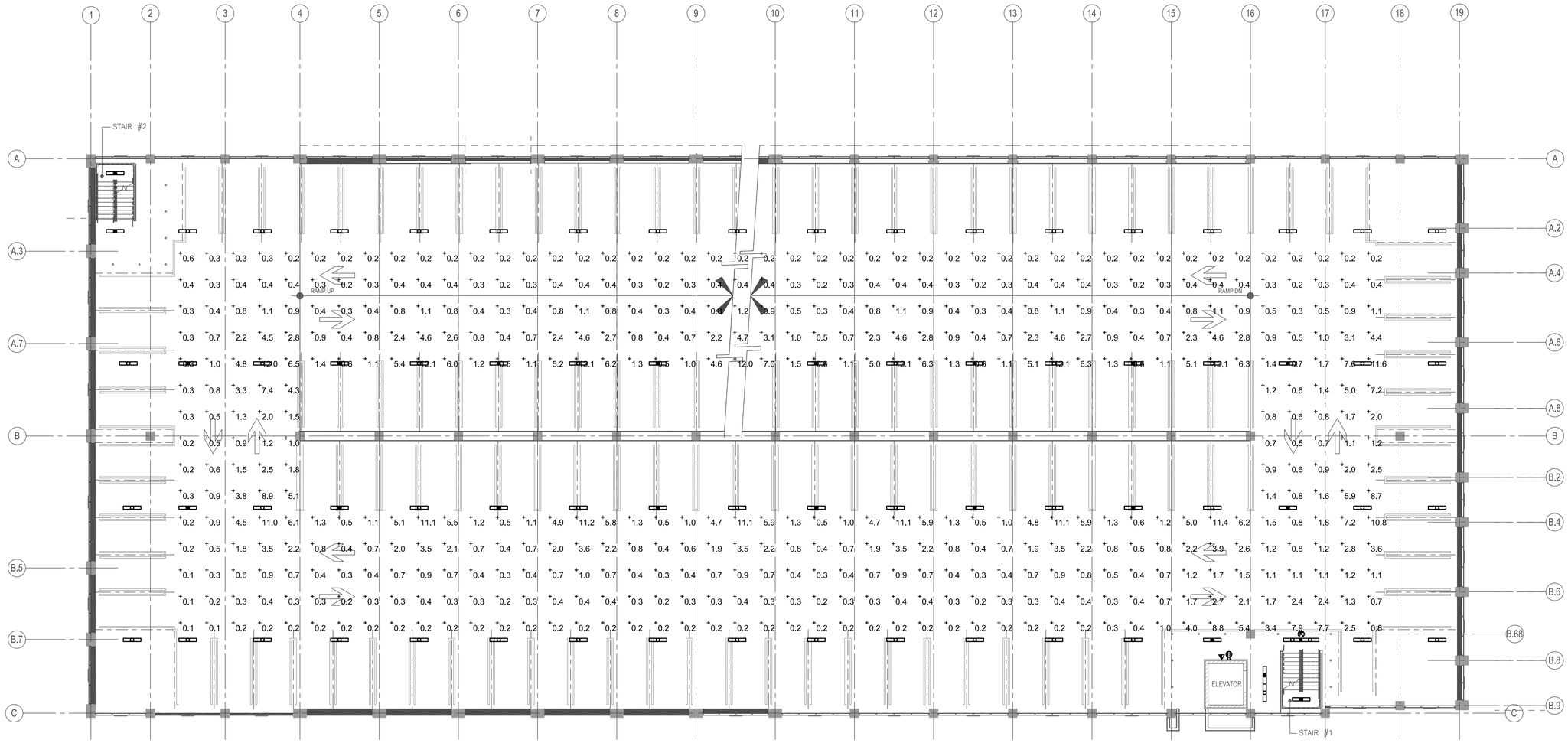

ELECTRICAL PARKING GARAGE LEVEL P-3

Scale 3/32"= 1'-0"

1

NORTH

Bayley Construction
3730 S. Susan St.
Suite 200
Santa Ana, CA, 92704
CA. License 734880
Tel 714-540-8863
Fax 714-556-8863

Bayley Construction
8005 S.E. 28th St.
P.O. Box 9004
Mercer Island, WA. 98040
WA. License BAYLEC034JC
Tel 206-621-8884
Fax 206-343-7728

BAYLEY CONSTRUCTION

Pacific Parking DESIGN
6 Venture, Suite 275 949.341.0066 t
Irvine, California 92618 949.341.0099 f

DLR Group WWCOT
Architecture Engineering Planning Interiors
4280 Latham Street, Suite H 951.682.0470 t
Riverside, California 92501 951.682.1801 f

GLUMAC
engineers for a sustainable future
18200 Von Karman Ave., Suite 100
Irvine, CA 92612
T. 949.833.8190 F. 949.833.0252
Job No.: 04.10.00861
Contact: JM/SCW/FN
www.glumac.com

REGISTERED PROFESSIONAL ENGINEER
No. E20828
Exp. 9-30-12
ELECTRICAL
STATE OF CALIFORNIA

Public Agency Submittal: .
Issued for Bidding: .
Issued for Construction: .

Revisions:

A 09.15.2011 PERMIT SET

NOT FOR CONSTRUCTION

PHASE II:
FOX
ENTERTAINMENT
PLAZA:
PARKING GARAGE

3605 Market Street,
Riverside, CA 92501

CITY of RIVERSIDE

CITY OF RIVERSIDE

3900 Main Street, Riverside, CA 92522

Phase: Plan Check
Revised .
PPD Project № 10-101

Emergency
Photometric Plan -
Level P-3

Issued Date: 05.02.2011
Drawn By: -
Checked By: -

P- E403

Sheet №

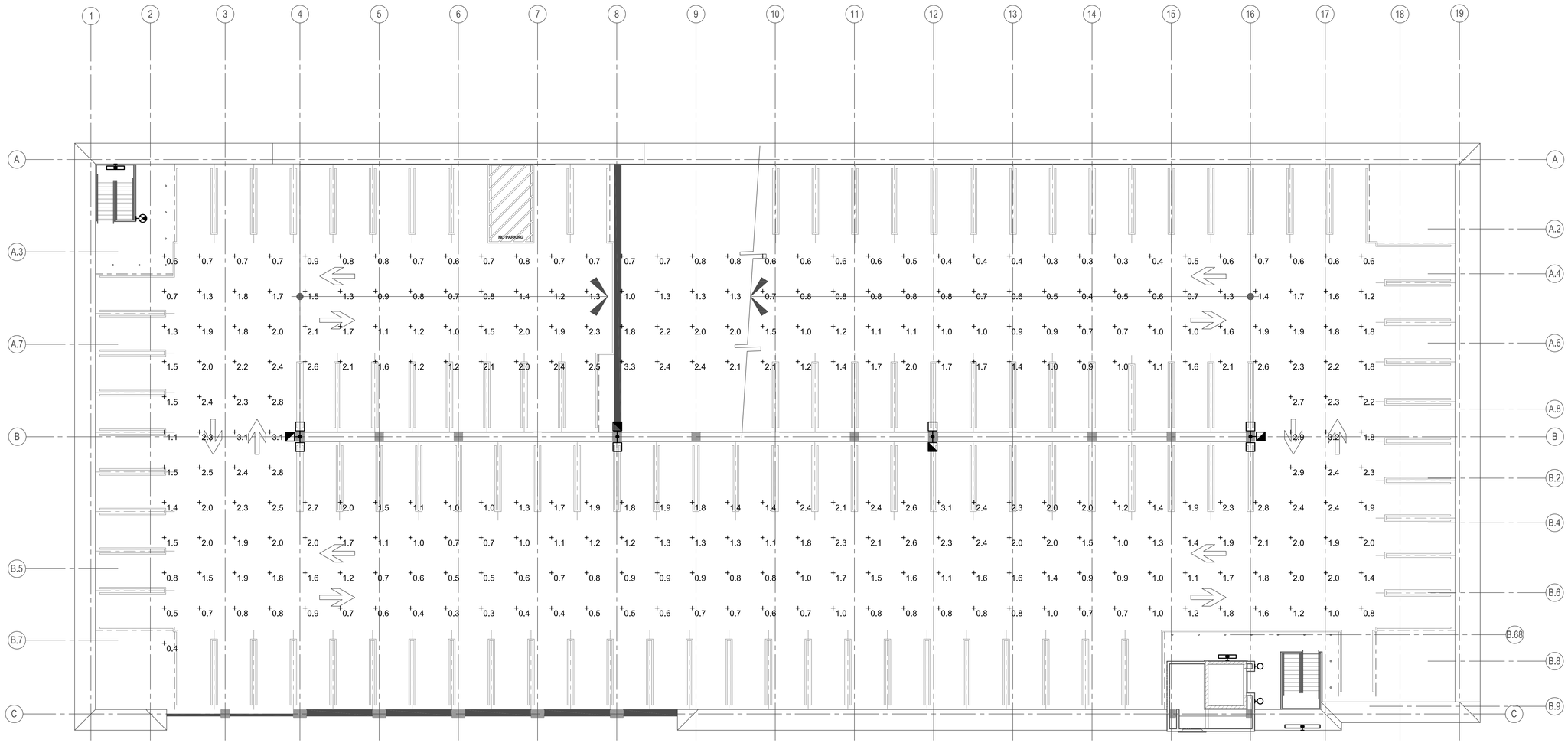

ELECTRICAL PARKING GARAGE LEVEL P-4

Scale
3/32"= 1'-0"

1

NORTH

Bayley Construction
3730 S. Susan St.
Suite 200
Santa Ana, CA, 92704
CA. License 734880
Tel 714-540-8863
Fax 714-556-8863

Bayley Construction
8005 S.E. 28th St.
P.O. Box 9004
Mercer Island, WA. 98040
WA. License BAYLEC034JC
Tel 206-621-8884
Fax 206-343-7728

BAYLEY CONSTRUCTION

Pacific Parking DESIGN
6 Venture, Suite 275 949.341.0066 t
Irvine, California 92618 949.341.0099 f

DLR Group WWCOT
Architecture Engineering Planning Interiors
4280 Latham Street, Suite H 951.682.0470 t
Riverside, California 92501 951.682.1801 f

GLUMAC
engineers for a sustainable future
18200 Von Karman Ave., Suite 100
Irvine, CA 92612
T. 949.833.8190 F. 949.833.0252
Job No.: 04.10.00861
Contact: JM/SCW/FN
www.glumac.com

REGISTERED PROFESSIONAL ENGINEER
FRANK NEWMAN
No. E20828
Exp. 9-30-12
ELECTRICAL
STATE OF CALIFORNIA

Public Agency Submittal: .
Issued for Bidding: .
Issued for Construction: .

Revisions:

A 09.15.2011 PERMIT SET

NOT FOR CONSTRUCTION

PHASE II: FOX ENTERTAINMENT PLAZA: PARKING GARAGE

3605 Market Street,
Riverside, CA 92501

CITY of RIVERSIDE

CITY OF RIVERSIDE

3900 Main Street, Riverside, CA 92522

Phase: Plan Check
Revised -
PPD Project № 10-101

Emergency Photometric Plan - Level P-4

Issued Date: 05.02.2011
Drawn By: -
Checked By: -

P- E404
Sheet №

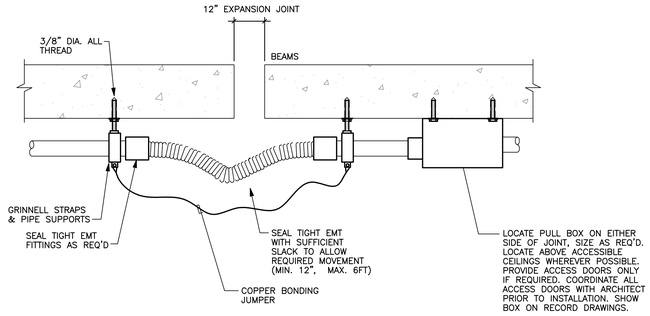

NOTES

A. TYPICAL FOR CONDUITS CROSSING BUILDING SEISMIC AND EXPANSION JOINTS.

B. NOT SHOWN ON ELECTRICAL PLANS. SEE ARCHITECTURAL AND STRUCTURAL DRAWINGS FOR LOCATIONS OF SEISMIC/EXPANSION JOINTS.

C. COORDINATE EXACT SEAL TIGHT SEPARATION TO ACCOMMODATE STRUCTURAL ENGINEER'S DIFFERENTIAL EXPANSION JOINT CALCULATIONS.

CONDUIT CROSSING EXPANSION JOINT

SCALE: NONE | 4

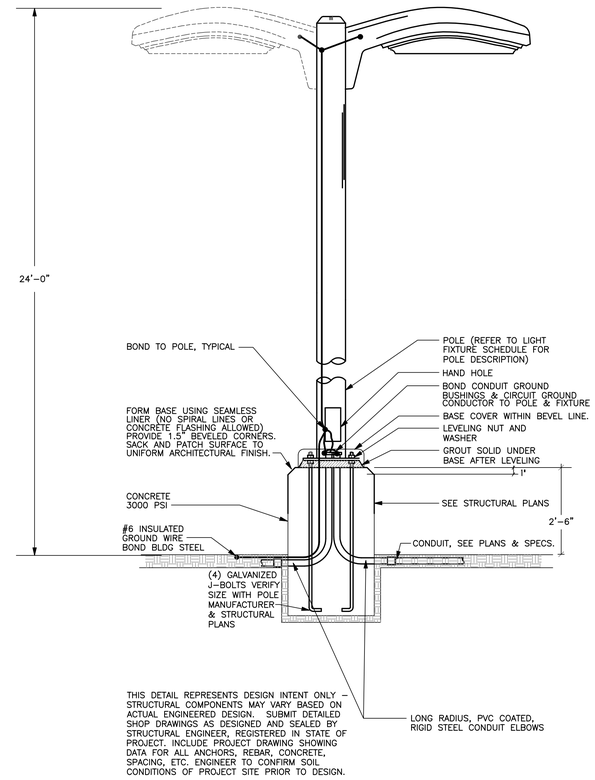

POLE MOUNTING DETAIL

SCALE: NONE | 1

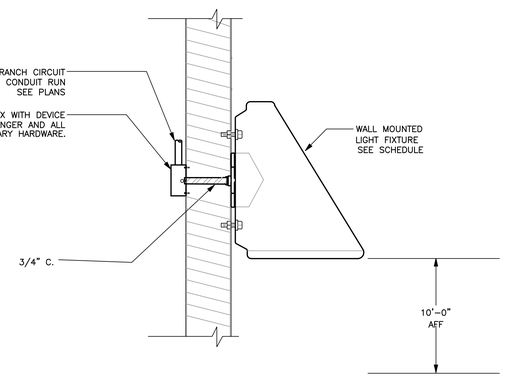

WALL SCONCE MOUNTING DETAIL

SCALE: NONE | 5

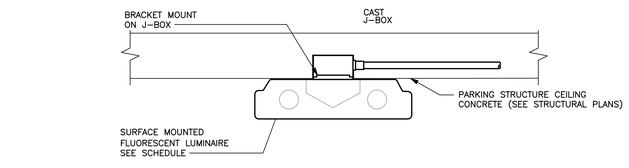

LUMINAIRE SURFACE MOUNTING

SCALE: NONE | 2

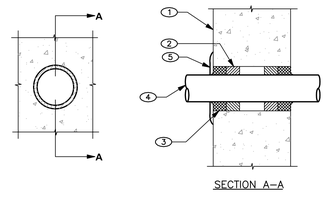

DETAIL NOTES

1. CONCRETE WALL (SOLID OR BLOCK), MIN. 5" THICK (2 HR). .
2. MIN. 3 3/4" THICKNESS OF MIN. 4 PCF DENSITY MINERAL WOOL BATT INSULATION FIRMLY PACKED INTO OPENING AS A PERMANENT FORM SO THAT THE WIDTH OF THE WOOL IS COMPRESSED AT LEAST 50%. PACKING MATERIAL TO BE RECESSED FROM TOP SURFACE OF FLOOR OR FROM BOTH SURFACES OF WALL AS REQUIRED TO ACCOMMODATE THE REQUIRED THICKNESS OF FILL MATERIAL.
3. FILL VOID OR CAVITY MATERIAL – SEALANT: MIN. 3/4" THICKNESS OF FILL MATERIAL APPLIED WITHIN ANNULUS, FLUSH WITH TOP SURFACE OF FLOOR OR BOTH SURFACES OF WALL.
4. CONDUIT: NOM. 4" DIAMETER (OR SMALLER) SCHEDULE 40 (OR HEAVIER) STEEL OR PVC PIPE SLEEVE CAST OR GROUTED INTO FLOOR/WALL ASSEMBLY, FLUSH WITH FLOOR OR WALL SURFACES. A MAX. OF ONE PIPE PERMITTED IN THE FIRESTOP SYSTEM. PIPE TO BE RIGIDLY SUPPORTED ON BOTH SIDES OF WALL ASSEMBLY.
5. CHROME ESCUTCHEON RING ON EXPOSED PENTRATIONS.

GENERAL NOTES

A. INSTALL FIRE STOP SYSTEMS IN STRICT CONFORMANCE WITH MANUFACTURER'S INSTRUCTIONS.

B. REFER TO ARCHITECTURAL PLANS FOR LOCATIONS OF FIRE RATE WALLS AND FLOORS.

C. ALL FIRE STOP SYSTEMS SHALL BE UL LISTED AND FIRE MARSHALL APPROVED.

PASSIVE FIRE PROTECTION PARTNERS
System No. C-AJ-0087

CONDUIT PENETRATION OF FIRE RATED WALL (CONCRETE)

SCALE: NONE | 6

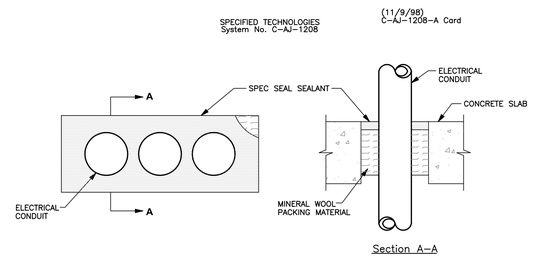

MULTIPLE CONDUIT PENETRATION FIRESTOP SYSTEMS

SCALE: NONE | 3

Bayley Construction
3730 S. Susan St.
Suite 200
Santa Ana, CA, 92704
CA. License 734880
Tel 714-540-8863
Fax 714-556-8863

Bayley Construction
8005 S.E. 28th St.
P.O. Box 9004
Mercer Island, WA. 98040
WA. License BAYLEC034JC
Tel 206-621-8884
Fax 206-343-7728

Pacific Parking DESIGN
6 Venture, Suite 275 949.341.0066 t
Irvine, California 92618 949.341.0099 f

DLR Group WWCOT
Architecture Engineering Planning Interiors
4280 Latham Street, Suite H 951.682.0470 t
Riverside, California 92501 951.682.1801 f

GLUMAC
engineers for a sustainable future
18200 Von Karman Ave., Suite 100
Irvine, CA 92612
T. 949.833.8180 F. 949.833.0252
Job No.: 04.10.00861
Contact: JM/SCW/FN
www.glumac.com

REGISTERED PROFESSIONAL ENGINEER
JONATHAN MITSUNOBU FUJII
No. E10328
Exp. 9-30-12
ELECTRICAL
STATE OF CALIFORNIA

Public Agency Submittal:
Issued for Bidding:
Issued for Construction:

Revisions:

#		
A	09.15.2011	PERMIT SET

NOT FOR CONSTRUCTION

PHASE II:
FOX ENTERTAINMENT PLAZA:
PARKING GARAGE

3605 Market Street,
Riverside, CA 92501

CITY of RIVERSIDE

CITY OF RIVERSIDE

3900 Main Street, Riverside, CA 92522

Phase: Plan Check
Revised -
PPD Project № 10-101

Electrical Details

Issued Date: 05.02.2011
Drawn By: -
Checked By: -

P- E500

Sheet №

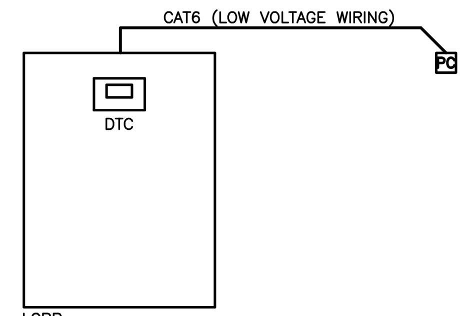

LCPP
LOCATION: ELEC RM
LC&D GR1416LT–DTCMODEM
–OR–
EQUAL

ID: LCPP (MASTER W/ CLOCK)
Location: Ground Level Elec Room
Supply Circuit: Voltage: 120V Normal

Enclosure Dimensions: 17.1"H x 10.6"W x 2.9"D
NEMA Rating: 1

Relay	Line Feed	SW	Zone	Type	Voltage	Source	Description	Relay	Line Feed	SW	Zone	Type	Voltage	Source	Description
1	PH–2	–	1	NC	277V	Normal	1st Level Perimeter	2	PH–18	–	1	NC	277V	Normal	Roof Poles
3	PH–4	–	2	NC	277V	Normal	1st Level Interior	4	PA–2	–	1	NC	120V	Normal	Sign
5	PH–6	–	1	NC	277V	Normal	2nd Level Perimeter, West	6	PA–4	–	1	NC	120V	Normal	Sign
7	PH–8	–	1	NC	277V	Normal	2nd Level Perimeter, East	8	–	–	–	NC	277V	Normal	Spare
9	PH–10	–	2	NC	277V	Normal	2nd Level Interior	10	–	–	–	NC	277V	Normal	Spare
11	PH–12	–	1	NC	277V	Normal	3rd Level Perimeter, West	12	–	–	–	NC	277V	Normal	Spare
13	PH–14	–	1	NC	277V	Normal	3rd Level Perimeter, East	14	–	–	–	NC	277V	Normal	Spare
15	PH–16	–	2	NC	277V	Normal	3rd Level Interior	16	–	–	–	NC	277V	Normal	Spare

ZONE 1: LIGHTS SHALL BE ON DURING BUSINESS HOURS. VERIFY TIME WITH OWNER.
ZONE 2: SHALL BE CONTROLLED BY PHOTOCELL

LIGHTING FIXTURE SCHEDULE

FIXTURE TYPE	FIXTURE SYMBOL	MANUFACTURER AND CAT. NO.	DESCRIPTION	VOLTAGE	LAMPS NO.	LAMPS TYPE	FIXTURE "WATTS"	REMARKS
FA		KENALL RHL7–48–MW–PIA–1–32–EB–1–VOLTAGE	VANDAL RESISTANT FLUORESCENT LUMINAIRE WITH POLYCARBONATE DIFFUSER AND INTEGRAL ELECTRONIC BALLAST.	277	2	F32T8 32W	62W	SHADING INDICATES FIXTURE TO BE ON EMERGENCY LIGHTING CIRCUIT.
FB		LITHONIA #EJA–2–32–120–GEB10IS OR APPROVED EQUAL BY: PRUDENTIAL, METALUX, WILLIAMS	4' FLUORESCENT INDUSTRIAL WITH 5% UPLIGHT WITH WIRE GUARD	277	2	F32T8 32W	62W	SHADING INDICATES FIXTURE TO BE ON EMERGENCY LIGHTING CIRCUIT.
FC		GARDCO LIGHTING GULLWING SERIES OR APPROVED EQUAL BY: LITHONIA	H.I.D POLE MOUNTED FIXTURE, TWO/THREE HEAD WITH CUTOFF DISTRIBUTION POLE: 4", 25'–0" SQUARE STRAIGHT STEEL POLE	277	1	250WMH METAL HALIDE	295W	SHADING INDICATES FIXTURE HEAD THAT IS TO BE ON EMERGENCY LIGHTING CIRCUIT.
FD		GARDCO LIGHTING 104 SCONCE SERIES	FLUORESCENT WALL MOUNTED SCONCE	277	TBD	42W TRT	46W	
X		LITHONIA OR APPROVED EQUAL	THERMAL PLASTIC LED EXIT SIGN; PROVIDE NUMBER OF FACES, DIRECTIONAL ARROWS, AND MOUNTING TYPE AS SHOWN ON PLANS	277	–	LED	–	

GENERAL LIGHTING FIXTURE NOTES:

A. MOUNTING HEIGHTS OF ALL WALL MOUNTED AND SUSPENDED LIGHTING FIXTURES SHALL BE DETERMINED BY THE ARCHITECT. REFER TO ARCHITECTURAL SECTIONS AND ELEVATIONS.

B. REFER TO ARCHITECTURAL REFLECTED CEILING PLANS FOR EXACT LOCATION OF ALL LIGHTING FIXTURES.

C. PROVIDE ELECTRONIC BALLASTS IN FLUORESCENT LIGHT FIXTURES.

D. COMPACT FLUORESCENT BALLASTS SHALL BE HIGH POWER FACTOR ELECTRONIC TYPE. BALLASTS SHALL HAVE INTERNAL CIRCUITRY TO DETECT END OF LAMP LIFE AND SHUT DOWN BALLAST.

E. VERIFY CEILING TYPES AND COORDINATE FIXTURE TRIMS PRIOR TO PURCHASE OF LIGHTING FIXTURES.

SIGN LIGHTING MANDATORY MEASURES

Project Name: RIVERSIDE PARKING STRUCTURE

☒ §133 **CONTROLS FOR ALL SIGNS**
ALL SIGNS WITH PERMANENTLY CONNECTED LIGHTING SHALL MEET THE REQUIREMENTS OF SECTION 133.

☒ §119 **AUTOMATIC TIME SWITCH CONTROL**
ALL SIGNS WITH PERMANENTLY CONNECTED LIGHTING SHALL BE CONTROLLED WITH AN AUTOMATIC TIME SWITCH CONTROL THAT COMPLIES WITH THE APPLICABLE REQUIREMENTS OF SECTION 119.

☒ §133(a)2 **PHOTOCONTROL OR OUTDOOR ASTRONOMICAL TIME SWITCH CONTROL**
ALL OUTDOOR SIGNS SHALL BE CONTROLLED WITH A PHOTOCONTROL OR OUTDOOR ASTRONOMICAL SWITCH CONTROL UNLESS EXEMPTED FROM THE EXCEPTIONS. SEE SECTION 133(a)2.

§133(a)2 **DIMMING**
ALL INDOOR SIGNS SHALL BE CONTROLLED WITH A DIMMER THAT PROVIDES THE ABILITY TO AUTOMATICALLY REDUCE SIGN POWER BY A MINIMUM OF 65 PERCENT DURING NIGHTTIME HOURS UNLESS EXEMPTED FROM THE 5 POSSIBLE EXEMPTIONS. SEE SECTION 133(a)3.

☐ **DEMAND RESPONSIVE ELECTRONIC MESSAGE CENTER CONTROL (EMC)**
NEWLY CONNECTED LIGHTING POWER LOAD GREATER THAN 15 KW SHALL HAVE A CONTROL INSTALLED THAT IS CAPABLE OF REDUCING THE LIGHTING POWER BY A MINIMUM OF 30% WHEN RECEIVING A DEMAND RESPONSE SIGNAL THAT IS SENT OUT BY THE LOCAL UTILITY.

CERTIFICATE OF COMPLIANCE (Part 2 of 4) (UNCONDITIONED) LTG-1C

Project Name: RIVERSIDE PARKING STRUCTURE — Date: April 29, 2011

INDOOR LIGHTING SCHEDULE and FIELD INSPECTION ENERGY CHECKLIST

Installation Certificate, LTG-1-INST (Retain a copy and verify form is completed and signed) — Field Inspector ☐
Certificate of Acceptance, LTG-2A (Retain a copy and verify form is completed and signed) — Field Inspector ☐
A separate Lighting Schedule Must Be Filled Out for Conditioned and Unconditioned Spaces. Installed Lighting Power Listed on this Lighting Schedule is for:
☐ CONDITIONED SPACE ☒ UNCONDITIONED SPACE
☐ The actual indoor lighting power listed below includes all installed permanent and portable lighting systems in accordance with 146(a)
☐ Only for offices: Up to the first 0.2 watts per square foot of portable lighting shall not be required to be included in the calculation of actual indoor lighting power density in accordance with the Exception to 146(a). All portable lighting in excess of 0.2 watts per square foot is totaled below.

A Name or Item Tag	B Complete Luminaire Description (i.e. 3 lamp fluorescent troffer, F32T8, one dimmable electronic ballast)	C Special Features	D Watts per Luminaire (1)	E CEC Default from NA8	E According to 130 (d or e)	F Number of Luminaires	G Installed Watts (DxF)	H Pass	H Fail
FA	4FTIND. FUORESCENT (Elec, Stor. Rm.)	☐	62	☐	☐	28	1736	☐	☐
FB	4FTIND. FUORESCENT (Garage)	☐	62	☐	☐	272	16864	☐	☐
FC	POLE MOUNTED LUMINAIRE	☐	295	☐	☐	10	2950	☐	☐
FD	WALL MOUNTED SCONCE	☐	46	☐	☐			☐	☐

INSTALLED WATTS PAGE TOTAL: 21550
Building total number of pages: ☐
INSTALLED WATTS BUILDING TOTAL (Sum of all pages): 21550
Enter into LTG-1C Page 4 of 4

1 Wattage shall be determined according to Section 130(d and e). Wattage shall be rating of light fixture, not rating of bulb.
2 If Fail then describe on Page 2 of the Inspection Checklist Form and take appropriate action to correct. Verify building plans if necessary.

CERTIFICATE OF COMPLIANCE (Part 1 of 4) LTG-1C

Project Name: RIVERSIDE PARKING STRUCTURE — Date: April 29, 2011
Project Address: 3605 Market Street, Riverside, CA 92501 — Climate Zone: 10 — Building CFA — Unconditioned Floor Area: 141774 sq.ft.
Building Type: ☒ NONRESIDENTIAL ☐ HIGH RISE RESIDENTIAL ☐ HOTEL/MOTEL GUEST ☐ RELOCATABLE PUBLIC SCHOOLS ☐ CONDITIONED SPACES ☐ UNCONDITIONED SPACES ☐ SCHOOLS
Phase of Construction: ☒ NEW CONSTRUCTION ☐ ADDITION ALTERATION
Method of Compliance: ☒ COMPLETE BUILDING AREA CATEGORY ☐ TAILORED

DOCUMENTATION AUTHOR'S DECLARATION STATEMENT
* I certify that this Certificate of Compliance documentation is accurate and complete.

Name: JONATHAN MITSUMORI — Signature:
Company: GLUMAC — Date: April 29, 2011
Address: 18200 VON KARMAN AVENUE, STE 100 — EA #: CEPE #:
City/St/Zip: IRVINE, CA 92606-4965 — Phone #: (949) 833-8190

Principal Lighting Designer's Declaration Statement
* I am eligible under Division 3 of the California Business and Professions Code to accept responsibility for the lighting design.
* This Certificate of Compliance identifies the lighting features and performance specifications required foe compliance with Title 24, Parts 1 and 6 of the California Code of Regulations.
* The design features represented on this Certificate of Compliance are consistent with the information provided to document this design on the other applicable compliance forms, worksheets, calculations, plans and specifications submitted to the enforement agency for approval with this building permit application.

Name: JONATHAN MITSUMORI — Signature:
Company: GLUMAC — Phone #: (949) 833-8190
Address: 18200 VON KARMAN AVENUE, STE 100 — License #: E10328
City/St/Zip: IRVINE, CA 92606-4965 — Date: April 29, 2011

LIGHTING MANDATORY MEASURES
Indicate location on building plans of Mandatory Measures Note

LIGHTING COMPLIANCE FORMS & WORKSHEET (check box if worksheet is included)
For detailed instructions on the use of this and all Energy Efficiency Standards compliance forms, please refer to the Nonresidential Manual published by the California Energy Commission.
☒ LTG-1C Pages 1 to 4 — Certificate of Compliance. All pages required on plans for all submittals
☐ LTG-2C — Lighting Controls Credit Worksheet
☒ LTG-3C — Indoor Lighting Power Allowance
☐ LTG-4C Pages 1 to 4 — Tailored Method Worksheet
☐ LTG-5C Pages 1 and 2 — Line Voltage Track Lighting Worksheet

INDOOR LIGHTING POWER ALLOWANCE LTG-3-C

Project Name: RIVERSIDE PARKING STRUCTURE — Date: April 29, 2011

ALLOWED LIGHTING POWER (Choose One Method)
A separate LTG-3C must be filled out for Conditioned and Unconditioned Spaces. Indoor Lighting Power Allowances listed on this page are only for: ☐ CONDITIONED Spaces ☒ UNCONDITIONED Spaces

COMPLETE BUILDING METHOD - UNCONDITIONED SPACES

BUILDING CATEGORY (From 146 Table 146-E)	WATTS PER SF	COMPLETE BLDG. AREA	ALLOWED WATTS
PARKING GARAGES	0.30	141,774	42,532

AREA CATEGORY METHOD - UNCONDITIONED SPACES

A AREA CATEGORY (From 146 Table 146-F)	B WATTS PER SF	C AREA (SF)	D ALLOWED WATTS

Area Category Method Page TOTALS
Sum of Additional Allowed Watts from Area Category Method - Part B (from table below)
Total Pages for Area Category Method ☐ Area Category Method Project TOTALS — SF Areas — WATTS

AREA CATEGORY METHOD - Part B Additional Wattage Allowance (from Table 146-F Footnotes)

A Primary Function	B sf	C Additional Watts per sf Allowed	D Wattage allowance (BxC)	E Description(s) and Quantity of Special Luminaire (2) Types in each Primary Function Area	F Total Design Watts	G ALLOWED WATTS Smaller of

TOTALS - Enter into Area Category Method - Part A (table above) — WATTS

1. Additional watts available only when allowed according to the footnotes on bottom of Table 146-F for chandelier or sconce; art, craft, assembly or manufacturing specialized task work; precision commercial/industrial work; or lab specialized task work.
2. Special luminaires are light fixtures described in the Table 146-F Footnotes that are subject to an addional wattage allowance.

TAILORED METHOD
Total Allowed Watts using the Tailored Method taken from LTG-4C (Page 1 of 4) Row 3
The indoor lighting power allowance using the Tailored Method of Compliance shall be determined using the LTG-4C set of forms. A separate set of LTG-4C forms shall be filled out for CONDITIONED and UNCONDITIONED spaces

CERTIFICATE OF COMPLIANCE (Part 3 of 4) LTG-1C

Project Name: RIVERSIDE PARKING STRUCTURE — Date: April 29, 2011

INDOOR LIGHTING SCHEDULE and FIELD INSPECTION ENERGY CHECKLIST
Fill in controls for all spaces: a) area controls, b) multi-level controls, c) manual daylighting controls for daylit areas > 250 ft2, automatic daylighting controls for daylit areas > 2,500 ft2, d) shut-off controls, e) display lighting controls, f) tailored lighting controls - general lighting controlled separately from display, ornamental and diplay case lighting and g) demand responsive automatic controls for retail stores > 50,000 ft2, in accordance with Section 131.

MANDATORY LIGHTING CONTROLS - FIELD INSPECTION ENERGY CHECKLIST

Type / Description	Number of Units	Location in Building	Special Features	Field Inspector Pass	Field Inspector Fail
Lighting Control Panel/Timeclock	1	Electrical Roor	☐	☐	☐
Photocell	1	Roof	☐	☐	☐

SPECIAL FEATURES INSPECTION CHECKLIST (See Page 2 of 4 of LTG-1C)
The local enforcement agency should pay special attention to the items specified in this checklist. These items require special written justification and documentation, and special verification. The local enforcement agency determines the adequacy of the justification, and may reject a building or design that otherwise complies based on the adequacy of the special justification and documentation submitted.

Field Inspector's Notes or Discrepancies:

MANDATORY MEASURES

Project Name: RIVERSIDE PARKING STRUCTURE

☒ §131(d) **BUILDING SHUT-OFF**
THE BUILDING LIGHTING SHUT-OFF SYSTEM CONSISTS OF AN AUTOMATIC TIME SWITCH, WITH A ZONE FOR EACH FLOOR.

§131(c) **OVERRIDE FOR BUILDING LIGHTING SHUT-OFF**
THE AUTOMATIC BUILDING SHUT-OFF SYSTEM IS PROVIDED WITH A MANUAL, ACCESSIBLE OVERRIDE SWITCH IN SIGHT OF THE LIGHTS. THE AREA OF OVERRIDE IS NOT TO EXCEED 5,000 SQ. FT.

☒ §131(c) **AUTOMATIC CONTROL DEVICES CERTIFIED:**
ALL AUTOMATIC CONTROL DEVICES SPECIFIED ARE CERTIFIED.
ALL ALTERNATE EQUIPMENT SHALL BE CERTIFIED AND INSTALLED AS DIRECTED BY THE MANUFACTURER.

☒ §131(c) **FLUORESCENT BALLAST AND LUMINARIES CERTIFIED:**
ALL FLUORESCENT FIXTURES SUBJECT TO CERTIFICATION AND SPECIFIED FOR THE PROJECTS ARE CERTIFIED.

☒ §131(c) **INDIVIDUAL ROOM/AREA CONTROLS:**
EACH ROOM AND AREA IN THIS BUILDING IS EQUIPPED WITH A SEPARATE SWITCH OR OCCUPANCY SENSOR DEVICE FOR EACH AREA WITH FLOOR-TO-CEILING WALLS.

☒ §131(c) **UNIFORM REDUCTION FOR INDIVIDUAL ROOMS:**
ALL ROOMS AND AREAS GREATER THAN 100 SQUARE FEET AND MORE THAN 0.8 WATTS PER SQUARE FOOT OF LIGHTING LOAD SHALL BE CONTROLLED WITH MULTI-LEVEL SWITCHING FOR UNIFORM REDUCTION OF LIGHTING WITHIN THE ROOM.

§131(c) **DAYLIT AREA CONTROL:**
ALL ROOMS THAT ARE GREATER THAN 250 SQUARE FEET AND CONTAIN WINDOWS AND SKYLIGHTS, THAT ALLOW FOR THE EFFECTIVE USE OF DAYLIGHT IN THE AREA SHALL HAVE 50% OF THE LIGHTING POWER IN EACH DAYLIT AREA CONTROLLED BY A SEPARATE SWITCH; OR
☐ §131(c) THE EFFECTIVE USE OF DAYLIGHT CANNOT BE ACCOMPLISHED BECAUSE THE WINDOWS ARE CONTINUOUSLY SHADED BY A BUILIDING ON THE ADJACENT LOT. DIAGRAM OF SHADING DURING DIFFERENT TIMES OF THE YEAR IS INCLUDED ON PLANS.

☐ §131(e) **DISPLAY LIGHTING:**
DISPLAY LIGHTING SHALL BE SEPARATELY SWITCHED ON CIRCUITS THAT ARE 20 AMPS OR LESS.

CERTIFICATE OF COMPLIANCE (Part 4 of 4) LTG-1C

Project Name: RIVERSIDE PARKING STRUCTURE — Date: April 29, 2011

CONDITIONED AND UNCONDITIONED SPACE LIGHTING MUST NOT BE COMBINED FOR COMPLIANCE

Indoor Lighting Power Conditioned Spaces		Watts	Indoor Lighting Power Unconditioned Spaces		Watts
Installed Lighting (from Conditioned LTG-1C Page 2)		0	Installed Lighting (from Unconditioned LTG-1C Page 2)		21550
Lighting Control Credit (from Conditioned Spaces LTG-2C)	-	0	Lighting Control Credit (from Unconditioned Spaces LTG-2C)	-	0
Adjusted **Installed** Lighting Power	=	0	Adjusted **Installed** Lighting Power	=	21,550
Complies if **Installed <= Allowed**		YES	Complies if **Installed** <= Allowed		YES
Allowed Lighting Power Conditioned Spaces (from LTG-3C)		0	**Allowed** Lighting Power Unconditioned Spaces (from LTG-3C)		42,532

REQUIRED ACCEPTANCE TEST
Designer:
This form is to be used by the designer and attached to the plans. Listed below is the acceptance test for the Lighting system, **LTG-2A**. The designer is required to check the acceptance tests and list all controls devices serving the building or space shall be certied as meeting the Acceptance Requirements for Code Compliance. If all the lighting system or control of a certain type requires a test, list the different lghting and the number of systems. The NA7 Section in the Appendix of the Nonresidential Reference Appendices Manual describes the test. Since this form will be part of the plans, completion of this section will allow the responsible party to budget for the scope of work appropriately. **Forms can be grouped by type of Luminaire controlled.**
Enforcement Agency:
Systems Acceptance. Before Occupancy Permit is granted for a newly constructed building or space or when ever new lighting system with controls is installed in the building or space shall be certified as meeting the Acceptance Requirements. The **LTG-2A** form is not considered a complete form and is not to be accepted by the enforcement agency unless the boxes are checked and/or filled and signed. In addition, a Certficate of Acceptance forms shall be submitted to the enforcement agency that certifies plans, specifications, installation certificates, and operating and maintenance information meet the requirements of 10-103(b) of Title 24 Part 6. The field inspector must receive the properly filled out and signed forms before the building can receive final occupancy. A copy of the **LTG-2A** for each different lighting luminaire control(s) must be provided to the owner of the building for their records.

Equipment Requiring Testing	Luminaires Controlled: Description	Luminaires Controlled: Number of like Controls	Location	LTG-2A: Controls and Sensors and Automatic DayLighting Controls Acceptance
Lighting Control Panel	See Plans	1	Electrical Room	☐

Bayley Construction
3730 S. Susan St.
Suite 200
Santa Ana, CA. 92704
CA. License 734880
Tel 714-540-8863
Fax 714-556-8863

Bayley Construction
8005 S.E. 28th St.
P.O. Box 9004
Mercer Island, WA. 98040
WA. License BAYLEC034JC
Tel 206-621-8884
Fax 206-343-7728

Pacific Parking DESIGN
6 Venture, Suite 275 949.341.0066 t
Irvine, California 92618 949.341.0099 f

DLR Group WWCOT
Architecture Engineering Planning Interiors
4280 Latham Street, Suite H 951.682.0470 t
Riverside, California 92501 951.682.1801 f

GLUMAC
engineers for a sustainable future
18200 Von Karman Ave., Suite 100
Irvine, CA 92612
T. 949.833.8190 F. 949.833.0252
Job No.: 04.10.00861
Contact: JM/SCW/FN
www.glumac.com

REGISTERED PROFESSIONAL ENGINEER JONATHAN MITSUMORI, P.E. No. E10328 Exp. 9-30-12 ELECTRICAL STATE OF CALIFORNIA

Public Agency Submittal: .
Issued for Bidding: .
Issued for Construction: .

Revisions:
A 09.15.2011 PERMIT SET

NOT FOR CONSTRUCTION

PHASE II:
FOX ENTERTAINMENT PLAZA:
PARKING GARAGE

3605 Market Street,
Riverside, CA 92501

CITY of RIVERSIDE
3900 Main Street, Riverside, CA 92522

Phase: Plan Check
Revised .
PPD Project № 10-101

Lighting Fixture Schedule & Title 24

Issued Date: 05.02.2011
Drawn By: -
Checked By: -

P- E600
Sheet №

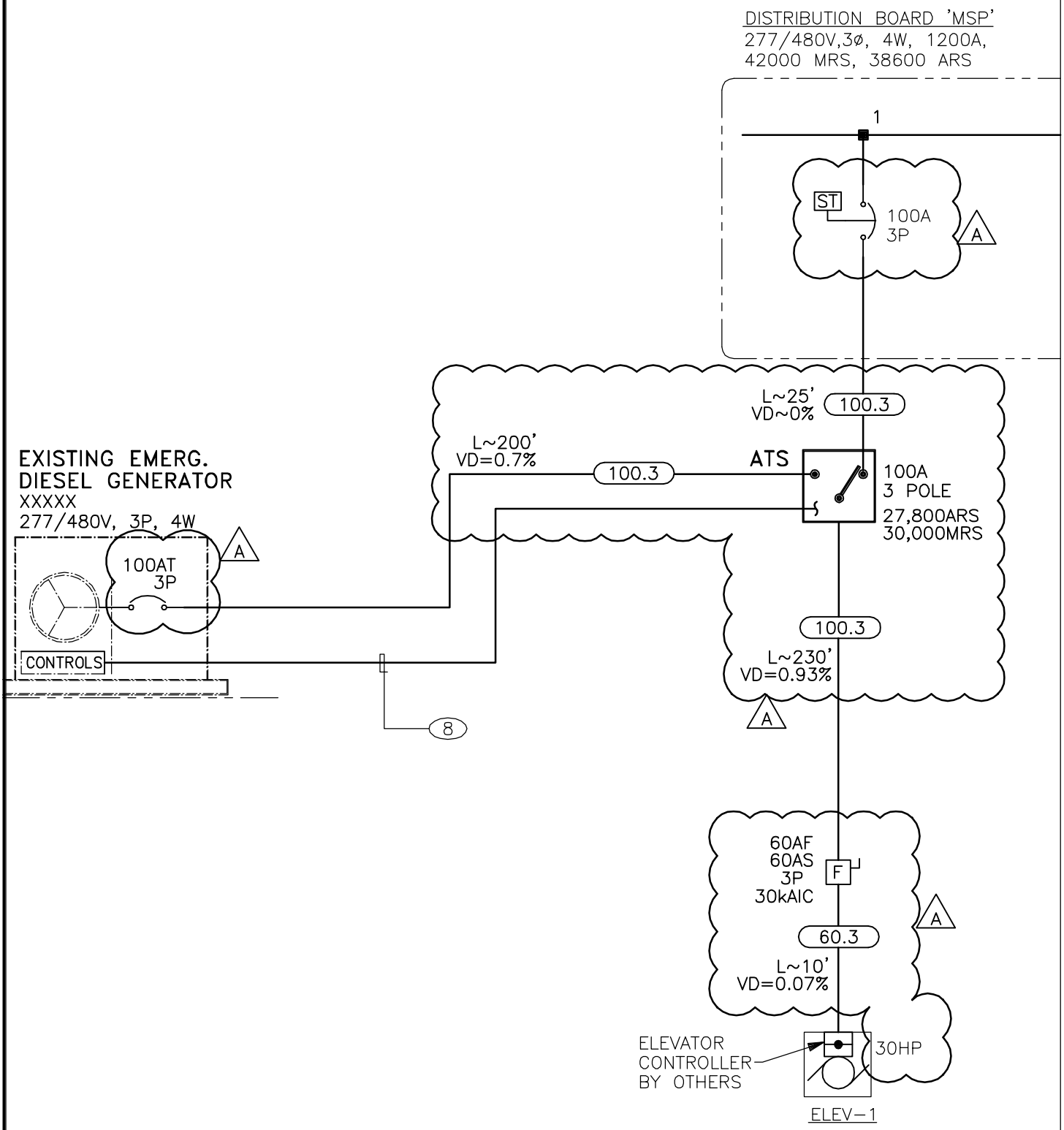

SINGLE LINE DIAGRAM

GLUMAC engineers for a sustainable future™
18200 Von Karman Ave., Suite 100
Irvine, CA 92612
T. 949.833.8190 F. 949.833.0252
Job No.: 408223
Contact: PP
www.glumac.com

DWG. TITLE:	SINGLE LINE DIAGRAM	DATE:	9/21/2011
		REF:	P-E001
REVISION:	PLAN CHECK SUBMITTAL	SCALE:	N.T.S.
PROJECT:	**PHASE II FOX ENTERTAINMENT PLAZA PARKING GARAGE**	DWG. NO:	**SKE-01**

ALL CIRCUITS SHARING THE SAME NEUTRAL SHALL BE TIED TOGETHER WITH A TIE BREAKER HANDLE PER NEC 2008 210.4(B)

POLE NO.	C.B. AMP/P	SERVICE	LOAD KVA TOTAL	TYPE	A	B	C	TYPE	TOTAL	SERVICE	C.B. AMP/P	POLE No.
A 1			2.66	M	4.58			L	1.92	LTG – 1ST LEVEL PERIMETER	20/1	2
3	20/3	BOOSTER PUMP BP-1	2.66	M		3.28		L	0.62	LTG – 1ST LEVEL INTERIOR	20/1	4
5			2.66	M			3.96	L	1.30	LTG – 2ND LEVEL PERIMETER, WEST	20/1	6
7	20/1	SPARE			1.49			L	1.49	LTG – 2ND LEVEL PERIMETER, EAST	20/1	8
9	20/1	SPARE				1.05		L	1.05	LTG – 2ND LEVEL INTERIOR	20/1	10
11	20/1	SPARE					1.30	L	1.30	LTG – 3RD LEVEL PERIMETER, WEST	20/1	12
13	20/1	SPARE			1.49			L	1.49	LTG – 3RD LEVEL PERIMETER, EAST	20/1	14
15	20/1	SPARE				0.99		L	0.99	LTG – 3RD LEVEL INTERIOR	20/1	16
17	20/1	SPARE					2.76	L	2.76	LTG – ROOF POLES	20/1	18
19	20/1	SPARE			1.49			L	1.49	LTG – 1ST LEVEL STOR. RM	20/1	20
21	20/1	SPARE				0.19		L	0.19	LTG – 1ST LEVEL ELEC. RM.	20/1	22
23	20/1	SPARE					3.00	M	3.00	ROLL-UP DOORS	20/1	24
25	20/1	SPARE			0.00					SPARE	20/1	26
27	20/1	SPARE				0.00				SPARE	20/1	28
29	20/1	SPARE					0.00			SPARE	20/1	30
31	20/1	SPARE			0.00					SPARE	20/1	32
33	20/1	SPARE				0.00				SPARE	20/1	34
35	20/1	SPARE					0.00			SPARE	20/1	36
37			6.54	–	9.05			L	2.50			38
39	70/3	PANEL 'PA'	3.84	–		5.20		L	1.36	PANEL 'EPH'	20/3	40
41			5.26	–			6.87	L	1.61			42
CONNECTED LOAD PER PHASE					18.09	10.71	17.89					

LOAD SUMMARY	CONN. KVA	DEMAND FACTOR	DEMAND KVA
TYPE "L": CONTINUOUS LOADS	25.36	125%	31.70
TYPE "R": RECEPTACLES (FIRST 10KVA)	2.34	100%	2.34
TYPE "R": RECEPTACLES (OVER 10KVA)	0.00	50%	0.00
TYPE "M": MISCELLANEOUS LOADS	15.57	100%	15.57
TYPE "A": AC LOADS	5.86	100%	5.86
TYPE "K": KITCHEN LOADS	0.00	65%	0.00
LARGEST MOTOR LOAD		25%	0.00
TOTAL	46.69		55.47

VOLTS: 277/480V,3PH,4W
MAIN C.B.: M.L.O.
BUS: 150A
POLES: 42
MOUNTING: SURFACE
AIC RATING: 30,000 SERIES RATED

DEMAND AMPS: 67

PANEL: **PH**

GLUMAC
engineers for a sustainable future™
18200 Von Karman Ave., Suite 100
Irvine, CA 92612
T: 949.833.8190 F: 949.833.0252
Job No.: 408223
Contact: PP
www.glumac.com

DWG. TITLE: PANEL SCHEDULES

REVISION: PLAN CHECK SUBMITTAL

PROJECT: **PHASE II FOX ENTERTAINMENT PLAZA PARKING GARAGE**

DATE: 9/21/2011

REF: P-E002

SCALE: N.T.S.

DWG. NO: **SKE-02**

ALL CIRCUITS SHARING THE SAME NEUTRAL SHALL BE TIED TOGETHER WITH A TIE BREAKER HANDLE PER NEC 2008 210.4(B)

POLE NO.	C.B. AMP/P	SERVICE	LOAD KVA TOTAL	TYPE	A	B	C	TYPE	TOTAL	SERVICE	C.B. AMP/P	POLE No.
1	20/1	REC – TELEPHONE BOARD	0.36	R	0.86			L	0.50	SIGN	20/1	2
3	20/1	REC – TELEPHONE BOARD	0.36	R		0.86		L	0.50	SIGN	20/1	4
5	20/1	REC – TELEPHONE ROOM	0.18	R			0.48	L	0.30	ELEVATOR ROOM LIGHT/REC	20/1	6
7	20/1	GARAGE GATE	0.60	M	1.60			M	1.00	ELEVATOR CONTROLLER	20/1	8
9	20/1	GARAGE GATE	0.60	M		0.90		L	0.30	ELEV. MACHINE RM. LIGHT/REC	20/1	10
11	20/1	GARAGE GATE	0.60	M			1.30	L	0.70	ELEVATOR LIGHTS/FAN	20/1	12
13	20/1	GARAGE GATE	0.60	M	0.78			R	0.18	UILITY RM RECEPT	20/1	14
15	20/1	GARAGE GATE	0.60	M		1.32		R	0.72	REC – GARAGE S.E.	20/1	16
17	20/1	GARAGE GATE	0.60	M			2.94	A	2.34	CU–1	20/2	18
19	20/1	RECEPT FOR MECH EQ	0.18	R	2.52			A	2.34			20
21	20/1	SPARE				0.22		A	0.22	EF–1	15/1	22
23	20/1	SPARE					0.36	R	0.36	REC – ELEC. RM., RESTROOM	20/1	24
25	20/1	SPARE			0.60			A	0.60	EF–2,3	20/1	26
27	20/1	SPARE				0.54		E	0.54	REC – STORAGE ROOM	20/1	28
29	20/1	SPARE					0.18	A	0.18	FC–1	20/2	30
31	20/1	SPARE			0.18			A	0.18			32
33	20/1	SPARE				0.00				SPARE	20/1	34
35	20/1	SPARE					0.00			SPARE	20/1	36
37	20/1	SPARE			0.00					SPARE	20/1	38
39	20/1	SPARE				0.00				SPARE	20/1	40
41	20/1	SPARE					0.00			SPARE	20/1	42
		CONNECTED LOAD PER PHASE			6.54	3.84	5.26					

LOAD SUMMARY	CONN. KVA	DEMAND FACTOR	DEMAND KVA
TYPE "L": CONTINUOUS LOADS	2.30	125%	2.88
TYPE "R": RECEPTACLES (FIRST 10KVA)	2.34	100%	2.34
TYPE "R": RECEPTACLES (OVER 10KVA)	0.00	50%	0.00
TYPE "M": MISCELLANEOUS LOADS	4.60	100%	4.60
TYPE "A": AC LOADS	5.86	100%	5.86
TYPE "K": KITCHEN LOADS	0.00	65%	0.00
LARGEST MOTOR LOAD		25%	0.00
TOTAL	15.64		15.68

DEMAND AMPS
44

VOLTS: 120/208V,3PH,4W
MAIN C.B.: 150 AMP
BUS: 225 AMP
POLES: 42
MOUNTING: SURFACE
AIC RATING: 10,000

PANEL **PA**

GLUMAC
engineers for a sustainable future™
18200 Von Karman Ave., Suite 100
Irvine, CA 92612
T: 949.833.8190 F: 949.833.0252
Job No.: 408223
Contact: PP
www.glumac.com

DWG. TITLE: PANEL SCHEDULES

REVISION: PLAN CHECK SUBMITTAL

PROJECT: **PHASE II FOX ENTERTAINMENT PLAZA PARKING GARAGE**

DATE: 9/21/2011

REF: P–E002

SCALE: N.T.S.

DWG. NO: **SKE-03**

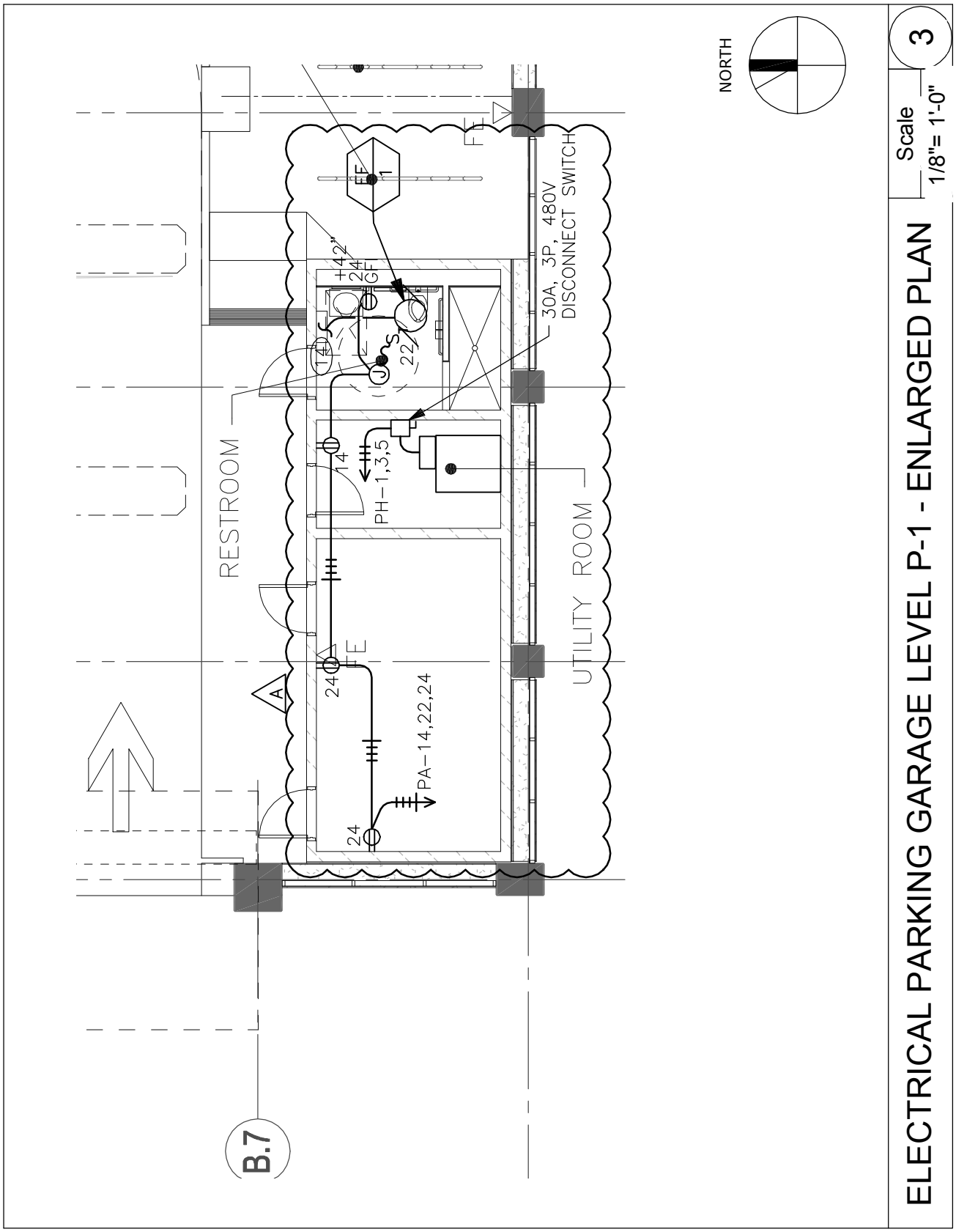

GLUMAC engineers for a sustainable future

18200 Von Karman Ave., Suite 100
Irvine, CA 92612
T. 949.833.8190 F. 949.833.0252

Job No.: 408223
Contact: PP
www.glumac.com

DWG. TITLE:	POWER PLAN LEVEL P-1	DATE:	9/21/2011
		REF:	P-E201
REVISION:	PLAN CHECK SUBMITTAL	SCALE:	AS SHOWN
PROJECT:	**PHASE II FOX ENTERTAINMENT PLAZA PARKING GARAGE**	DWG. NO:	**SKE-04**

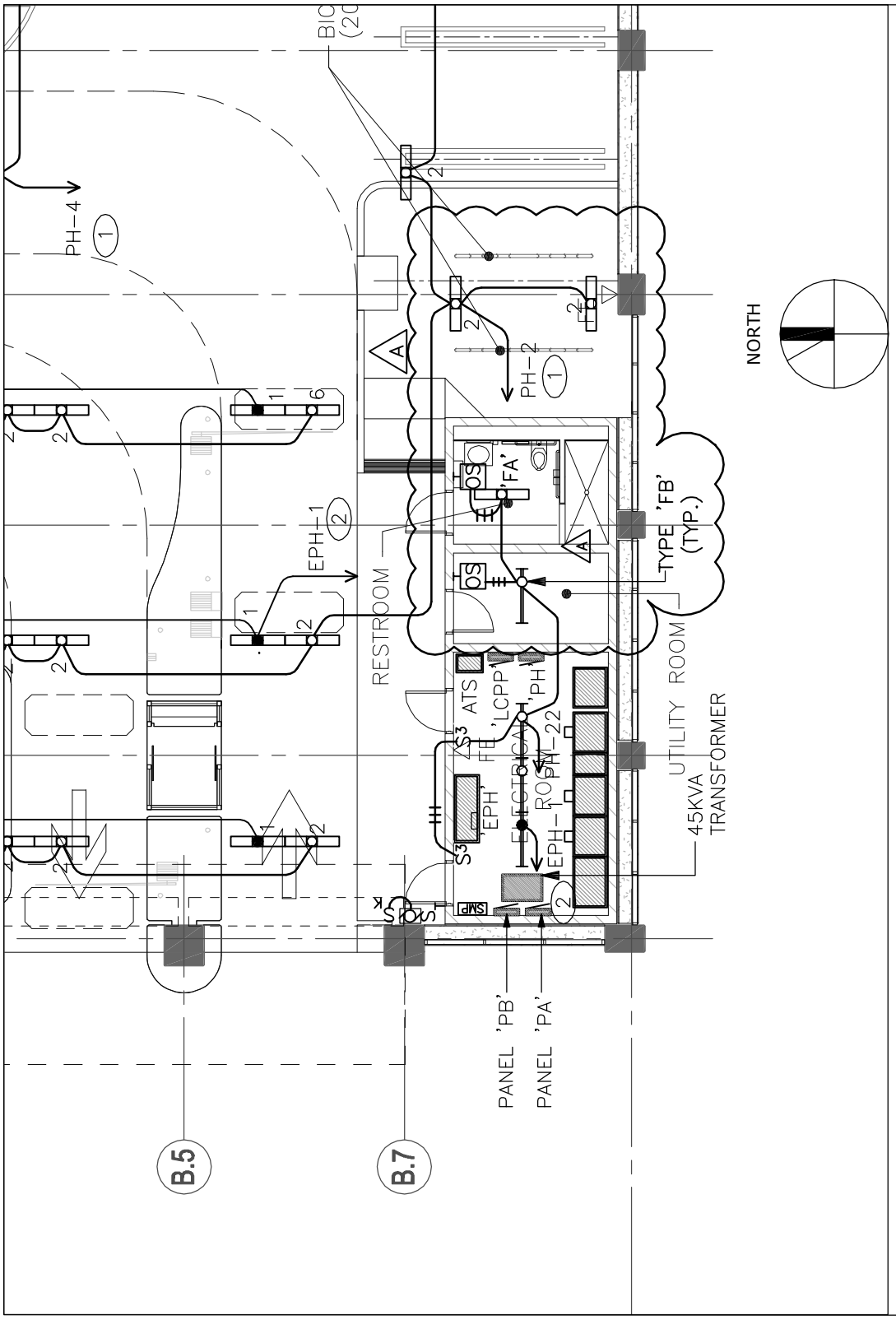

ELECTRICAL PARKING GARAGE LEVEL P-1

1

Scale
3/32"= 1'-0"

GLUMAC engineers for a sustainable future™

18200 Von Karman Ave., Suite 100
Irvine, CA 92612
T. 949.833.8190 F. 949.833.0252

Job No.: 408223
Contact: PP
www.glumac.com

DWG. TITLE:	LIGHTING PLAN LEVEL P-1	DATE:	9/21/2011
		REF:	P-E301
REVISION:	PLAN CHECK SUBMITTAL	SCALE:	AS SHOWN
PROJECT:	**PHASE II FOX ENTERTAINMENT PLAZA PARKING GARAGE**	DWG. NO:	**SKE-05**

PARKING STRUCTURE
MECHANICAL PLANS

HVAC LEGEND

GENERAL

SYMBOL	DESCRIPTION
(N)	NEW WORK
(E)	EXISTING WORK TO REMAIN
	EXISTING WORK TO BE REMOVED
	CENTER LINE
	POINT OF CONNECTION
AD/AP	ACCESS DOOR / ACCESS PANEL
T H S CO2	THERMOSTAT, HUMIDISTAT, CO SENSOR, CO2 SENSOR
1 M-1	DETAIL 1, DRAWING M-1
A M-1	SECTION A, DRAWING M-1
1 M-1	ELEVATION 1, DRAWING M-1
EXH 1	RISER IDENTIFICATION EXHAUST #1
HP 1	EQUIPMENT IDENTIFICATION HEAT PUMP UNIT #1
1	KITCHEN EQUIPMENT TAG
1	SHEET NOTE REFERENCE TAG

VALVES & GAUGES

SYMBOL	DESCRIPTION
	BALL VALVE
	SOLENOID CONTROL VALVE
	PRESSURE AND TEMP. RELIEF VALVE
	BUTTERFLY VALVE
	MOTORIZED BUTTERFLY VALVE
	GATE VALVE
	BALANCING VALVE
	ANGLE GATE VALVE
	GLOBE VALVE
	ANGLE GLOBE VALVE
	CHECK VALVE
	2-WAY CONTROL VALVE
	3-WAY CONTROL VALVE
	NON-SLAM WAFER CHECK VALVE
	PRESSURE REDUCING VALVE (PRV)
	DIAPHRAM VALVE
	LOCK SHIELD VALVE
	NEEDLE VALVE
	QUICK OPENING VALVE
	VENTURI FLOW METER
	PRESSURE GAUGE
	PRESS. GAUGE WITH COCK AND SNUBBER
	THERMOMETER

DUCTWORK

SYMBOL (DOUBLE LINE)	DESCRIPTION	SYMBOL (SINGLE LINE)
AD/AP	ACCESS DOOR / ACCESS PANEL	
	FLEXIBLE CONNECTION	
	FLEXIBLE DUCT RUNOUT TO DIFFUSER	
12x6	DUCT SIZE (WIDTH x DEPTH)	12x6
	DUCT THROUGH BEAM PENETRATION	
R D	DUCT OFFSET (RISE OR DROP)	R D
VD	VOLUME DAMPER	VD
FD SD FSD	FIRE, SMOKE OR FIRE/SMOKE DAMPER	FD SD FSD
	SUPPLY DUCT UP	
	SUPPLY DUCT DOWN	
	EXHAUST DUCT UP	
	EXHAUST DUCT DOWN	
	RETURN DUCT UP	
	RETURN DUCT DOWN	
	CROSS SECTION OF SUPPLY DUCT	
	CROSS SECTION OF EXHAUST AIR DUCT	
	CROSS SECTION OF RETURN AIR DUCT	
	CROSS SECTION OF ROUND DUCT	
	DUCT ELBOW WITH TURNING VANES	
	SMOOTH RADIUS DUCT ELBOW WITHOUT TURNING VANES	
12x6	ACOUSTICAL LINING DUCT DIMENSION IS ID	12x6
M	MOTORIZED DAMPER	M
SIZE TD CFM	TRANSFER DUCT (WITH LINER)	SIZE TD CFM
8'-11" BOD	INDICATES 8'11" TO BOTTOM OF DUCT	8'-11" BOD
NECK SIZE-TAG-CFM	ROUND OR SQUARE CEILING SUPPLY DIFFUSER (SEE SCHEDULE) 4-WAY THROW UNLESS INDICATED OTHERWISE.	NECK SIZE-TAG-CFM
NECK SIZE-TAG-CFM	ROUND OR SQUARE CEILING EXHAUST REGISTER (SEE SCHEDULE)	NECK SIZE-TAG-CFM
NECK SIZE-TAG-CFM	ROUND OR SQUARE CEILING RETURN REGISTER (SEE SCHEDULE)	NECK SIZE-TAG-CFM
NECK SIZE-TAG-CFM	ROUND OR SQUARE CEILING RETURN GRILLE (SEE SCHEDULE)	NECK SIZE-TAG-CFM
NECK SIZE-TAG-CFM	ROUND OR SQUARE CEILING RETURN GRILLE (SEE SCHEDULE)	NECK SIZE-TAG-CFM
NECK SIZE-TAG-CFM	ROUND OR SQUARE CEILING RETURN GRILLE (SEE SCHEDULE)	NECK SIZE-TAG-CFM
NECK SIZE-TAG-CFM	WALL SUPPLY REGISTER (SEE SCHEDULE)	NECK SIZE-TAG-CFM
NECK SIZE-TAG-CFM	WALL RETURN REGISTER (SEE SCHEDULE)	NECK SIZE-TAG-CFM
A	LINEAR SLOT DIFFUSER (SEE SCHEDULE)	A
DSD	DUCT SMOKE DETECTOR	

PIPING

SYMBOL	DESCRIPTION
	DIRECTION OF SLOPE
	DIRECTION OF FLOW
	PIPE UP
	PIPE DOWN
	PIPE DROP/PIPE RISE
	TOP CONNECTION – BRANCH LINE
	BOTTOM CONNECTION – BRANCH LINE
	PIPE ANCHOR
	TEE UP
	TEE DOWN
	STRAINER
	STRAINER WITH BLOW OFF
	INLINE PUMP
	BASE MOUNTED PUMP
	TEST TEE
	TEST TAP (PETE'S PLUG)
	MANUAL AIR VENT
	AUTOMATIC AIR VENT
	VACUUM BREAKER
	VENT THRU ROOF
	PIPE GUIDE
	EXPANSION JOINT
	FLEXIBLE CONNECTOR
	UNION
	CAPPED OR PLUGGED TEE
	BLIND FLANGE, CAP
	CONCENTRIC REDUCER
	ECCENTRIC REDUCER
	EXPANSION LOOP
	VALVE ON RISE

MISCELLANEOUS

SYMBOL	DESCRIPTION
RD	REFRIGERANT DISCHARGE
RS	REFRIGERANT SUCTION
	PNEUMATIC CONTROL VALVE
A	AIR LINE

ABBREVIATIONS

AAV	AUTOMATIC AIR VENT
ABV	ABOVE
AC	AIR CONDITIONING
ACCEPT	ACCEPTANCE
ACU	AIR CONDITIONING UNIT
AD	ACCESS DOOR
ADD	ADDITION
AF	AFTER FILTER
AFF	ABOVE FINISHED FLOOR
AFMS	AIR FLOW MEASURING STATION
AFUE	ANNUAL FUEL UTILIZATION EFFICIENCY
AG	AIR GAP
AHJ	AUTHORITY HAVING JURISDICTION
AHU	AIR HANDLING UNIT
AMB	AMBIENT
A-	AMPERE
AP	ACCESS PANEL
APPROX	APPROXIMATELY
ARCH	ARCHITECT
ARI	AMERICAN REFRIGERATION INSTITUTE
AS	AIR SEPARATOR
AUTO	AUTOMATIC
AUX	AUXILIARY
B	BOILER
BBD	BOILER BLOW DOWN
BDD	BACKDRAFT DAMPER
BEL	BELOW
BHP	BRAKE HORSEPOWER
BHT	BASEBOARD HEATER
BMS	BUILDING MANAGEMENT SYSTEM
BOD	BOTTOM OF DUCT
BOP	BOTTOM OF PIPE
BFP	BACKFLOW PREVENTER
BSMT	BASEMENT
BTU	BRITISH THERMAL UNIT
BTUH	BTU PER HOUR
BV	BALL VALVE OR BALANCING VALVE
BYV	BUTTERFLY VALVE
C	COMMON, CONDENSATE OR CONDUIT
CA	CONTROL AIR
CAP	CAPACITY
CAV	CONSTANT AIR VOLUME
CB	CHILLED BEAM
CC	COOLING COIL OR CONTROLS CONTRACTOR
CEG	CEILING EXHAUST GRILLE
CER	CEILING EXHAUST REGISTER
CFF	CAP FOR FUTURE
CFM	CUBIC FEET PER MINUTE
CFS	CUBIC FEET PER SECOND
CDWR	CONDENSER WATER RETURN
CDWS	CONDENSER WATER SUPPLY
CHWR	CHILLED WATER RETURN
CHWS	CHILLED WATER SUPPLY
CH	CHILLER
CHV	CHECK VALVE
CL	CENTERLINE
CLG	CEILING
CO	CLEANOUT
COL	COLUMN
COMP	COMPRESSOR
CONC	CONCRETE
COND	CONDENSATE
CONN	CONNECTION
CONT	CONTINUATION
CONTR	CONTRACTOR
COP	COEFFICIENT OF PERFORMANCE
CP	CONTROL PANEL OR CONDENSATE PUMP
CPF	CHEMICAL POT FEEDER
CR	CONDENSATE RETURN
CRR	CEILING RETURN REGISTER
CRG	CEILING RETURN GRILLE
CS	CIRCUIT SETTER
CSD	CEILING SUPPLY DIFFUSER
CTE	CONNECT TO EXISTING
CU FT	CUBIC FEET
CU IN	CUBIC INCH
CV	CONSTANT VOLUME OR CONTROL VALVE
CW	COLD WATER
D	DROP OR DRAIN
DB	DRY BULB TEMPERATURE
DDC	DIRECT DIGITAL CONTROL
DEFL	DEFLECTION
DIA	DIAMETER
DIFF	DIFFERENCE
DN	DOWN
DP	DIFFERENTIAL PRESSURE
DPT	DEW POINT TEMPERATURE
DSD	DUCT SMOKE DETECTOR
DV	DIAPHRAGM VALVE
DWG(S)	DRAWING(S)
DX	DIRECT EXPANSION
(E)	EXISTING
EA	EXHAUST AIR OR EACH
EAD	EXHAUST AIR DAMPER
EAT	ENTERING AIR TEMPERATURE
EC	ELECTRICAL CONTRACTOR
ECON	ECONOMIZER
EDB	ENTERING DRY BULB TEMPERATURE
EER	ENERGY EFFICIENCY RATING
EF	EXHAUST FAN
EFF	EFFICIENCY
EJ	EXPANSION JOINT
EL	ELEVATION
ELEC	ELECTRICAL
EMS	ENERGY MANAGEMENT SYSTEM
EQUIP	EQUIPMENT
ESP	EXTERNAL STATIC PRESSURE
EWB	ENTERING WET BULB TEMPERATURE
EWT	ENTERING WATER TEMPERATURE
EXH	EXHAUST
EXPT	EXPANSION TANK
EXT	EXTERNAL
F	FAHRENHEIT OR FILTER
FPB	FAN POWERED BOX
FC	FLEXIBLE CONNECTION OR FAIL CLOSED
FCU	FAN COIL UNIT
FD	FIRE DAMPER
FF	FINAL FILTER OR FINISHED FLOOR
FLR	FLOOR
FO	FAIL OPEN
FPI	FINS PER INCH
FPM	FEET PER MINUTE
FPS	FEET PER SECOND
FSD	FIRE/SMOKE DAMPER
FT	FOOT OR FEET
G	GAS
GA	GAUGE, GAGE
GAL	GALLONS
GALV	GALVANIZED
GC	GAS COCK OR GENERAL CONTRACTOR
GLV	GLOBE VALVE
GN	GENERAL NOTE
GPM	GALLONS PER MINUTE
GND	GROUND
GV	GATE VALVE
H	HEIGHT
HB	HOSE BIBB
HC	HEATING COIL
HD	HEAD
HOR	HORIZONTAL
HP	HIGH PRESSURE
HP	HORSEPOWER
HP	HEAT PUMP
HPC	HIGH PRESSURE CONDENSATE
HPS	HIGH PRESSURE STEAM
HR	HOUR(S)
HRU	HEAT RECOVERY UNIT
HS	HUMIDITY SENSOR
HTR	HEATER
HV	HOSE VALVE
HVAC	HEATING, VENTILATING & AIR CONDITIONING
HW	HOT WATER
HWR	HEATING WATER RETURN
HWS	HEATING WATER SUPPLY
HX	HEAT EXCHANGER
HZ	FREQUENCY (HERTZ)
ID	INSIDE DIAMETER
IN	INCH(ES)
IPLV	INTEGRATED PART LOAD VALUE
JB	JUNCTION BOX
KW	KILOWATT
KWH	KILOWATT HOUR
L	LENGTH
LAT	LEAVING AIR TEMPERATURE
LBS	POUNDS
LDB	LEAVING DRY BULB
LF	LINEAR FEET
LP	LOW PRESSURE
LPC	LOW PRESSURE CONDENSATE
LPS	LOW PRESSURE STEAM
LWB	LEAVING WET BULB
LWT	LEAVING WATER TEMPERATURE
M	MOTOR
MA	MIXED AIR
MAD	MIXED AIR DAMPER
MAX	MAXIMUM
MBH	THOUSAND BTU PER HOUR
MC	MECHANICAL CONTRACTOR
MCA	MINIMUM CIRCUIT AMPACITY
MCC	MOTOR CONTROL CENTER
MD	MOTORIZED DAMPER
MECH	MECHANICAL
MERV	MINIMUM EFFICIENCY RATING VALUE
MFR	MANUFACTURER
MIN	MINIMUM
MOCP	MAXIMUM OVER CURRENT PROTECTION
MPC	MEDIUM PRESSURE CONDENSATE
MPS	MEDIUM PRESSURE STEAM
MV	MANUAL AIR VENT
(N)	NEW
N/A	NOT APPLICABLE
NC	NORMALLY CLOSED
NIC	NOT IN CONTRACT
NO	NUMBER OR NORMALLY OPEN
NOM	NOMINAL
NPSH	NET POSITIVE SUCTION HEAD
NTS	NOT TO SCALE
OAD	OUTSIDE AIR DAMPER
OAT	OUTSIDE AIR TEMPERATURE
OBD	OPPOSED BLADE DAMPER
OC	ON CENTER
OD	OUTSIDE DIAMETER
OFCI	OWNER FURNISHED CONTRACTOR INSTALLED
OFOI	OWNER FURNISHED OWNER INSTALLED
OPER	OPERATING
OSA	OUTSIDE AIR
OV	OUTLET VELOCITY
P	PUMP OR PRESSURE OR POLE
PC	PUMPED CONDENSATE
PD	PRESSURE DROP
PF	PREFILTER
PG	PIPE GUIDE OR PRESSURE GAUGE
PH	PHASE (ELECTRICAL)
PHC	PREHEAT COIL
PLBG	PLUMBING
POC	POINT OF CONNECTION
PRESS	PRESSURE
PRV	PRESSURE REDUCING VALVE
PS	PRESSURE SENSOR
PSI	POUNDS PER SQUARE INCH
PSIA	PSI ABSOLUTE
PSIG	PSI GAUGE
PV	PLUG VALVE
QTY	QUANTITY
R	RISERS, RELOCATE OR RISE
RA	RETURN AIR
RAD	RETURN AIR DAMPER
RD	REFRIGERANT DISCHARGE OR ROOF DRAIN
REF	ROOFTOP EXHAUST FAN
REFRIG	REFRIGERATION
REJ	REJECTION
REQ'D	REQUIRED
REV	REVISE, REVISION OR REVOLUTIONS
RF	RETURN FAN
RH	RELATIVE HUMIDITY
RHC	REHEAT COIL
RHT	RADIANT HEATER
RM	ROOM
RPM	REVOLUTIONS PER MINUTE
RS	REFRIGERANT SUCTION
RTU	ROOFTOP UNIT
S	SUPPLY OR SLOPE
SA	SUPPLY AIR
SCFM	CFM, STANDARD CONDITIONS
SD	SMOKE DAMPER
SEER	SEASONAL ENERGY EFFICIENCY RATING
SEN	SENSIBLE
SF	SUPPLY FAN OR SQUARE FEET
SHC	SQUARE HEAD COCK
SN	SHEET NOTE
SP	STATIC PRESSURE
SPD	SPLITTER DAMPER
SPEC	SPECIFICATIONS
SQ IN	SQUARE INCH
ST	STRAINER OR SOUND TRAP
STD	STANDARD
STRUCT	STRUCTURAL
SV	STEAM VENT
T	THERMOMETER OR THERMOSTAT
TCP	TEMPERATURE CONTROL PANEL
TDH	TOTAL DYNAMIC HEAD
TEMP	TEMPERATURE
TI	TENANT IMPROVEMENT
TRG	TRANSFER GRILLE
TS	TEMPERATURE SENSOR
TSP	TOTAL STATIC PRESSURE
TT	TEST TAP OR TEST TEE
TXV	THERMAL EXPANSION VALVE
(TYP)	TYPICAL
U	HEAT TRANSFER COEFFICIENT
UG	UNDERGROUND
UH	UNIT HEATER
UON	UNLESS OTHERWISE NOTED
V	VENT OR VOLT OR VELOCITY
VAV	VARIABLE AIR VOLUME
VB	VACUUM BREAKER
VD	VOLUME DAMPER
VEL	VELOCITY
VERT	VERTICAL
VFD	VARIABLE FREQUENCY DRIVE
VFM	VENTURI FLOW METER
VOL	VOLUME
VTR	VENT THROUGH ROOF
W	WASTE OR WIDTH OR WATTS
W/	WITH
W/O	WITHOUT
WB	WET BULB TEMPERATURE
WC	WATER COLUMN
WEG	WALL EXHAUST GRILLE
WG	WATER GAUGE
WP	WORKING PRESSURE
WPD	WATER PRESSURE DROP
WRR	WALL RETURN REGISTER
WSHP	WATER-SOURCE HEAT PUMP
WSR	WALL SUPPLY REGISTER
WT	WEIGHT
XFMR	TRANSFORMER
Z	ZONE

HVAC DRAWING LIST

P-M000	MECHANICAL LEAD SHEET
P-M001	MECHANICAL EQUIPMENT SCHEDULES & DETAILS
P-M201	MECHANICAL PARKING GARAGE LEVEL P-1 & P-2

BAYLEY CONSTRUCTION

Bayley Construction
3730 S. Susan St.
Suite 200
Santa Ana, CA, 92704
CA. License 734880
Tel 714-540-8863
Fax 714-556-8863

Bayley Construction
8005 S.E. 28th St.
P.O. Box 9004
Mercer Island, WA. 98040
WA. License BAYLEC034JC
Tel 206-621-8884
Fax 206-343-7728

Pacific Parking DESIGN

6 Venture, Suite 275 949.341.0066 t
Irvine, California 92618 949.341.0099 f

DLR Group WWCOT
Architecture Engineering Planning Interiors

4280 Latham Street, Suite H 951.682.0470 t
Riverside, California 92501 951.682.1801 f

GLUMAC
engineers for a sustainable future™

18200 Von Karman Ave., Suite 100
Irvine, CA 92612
T. 949.833.8180 F. 949.833.0252
Job No.: 04.10.00861
Contact: JM/SCW/FN
www.glumac.com

REGISTERED PROFESSIONAL ENGINEER
R. LEONARD HOLZER
No. 22941
Exp. 9-30-12
MECHANICAL
STATE OF CALIFORNIA

Public Agency Submittal: .
Issued for Bidding: .
Issued for Construction: .

Revisions:

A 09.15.2011 PERMIT SET

NOT FOR CONSTRUCTION

PHASE II: FOX ENTERTAINMENT PLAZA: PARKING GARAGE

3605 Market Street,
Riverside, CA 92501

CITY of RIVERSIDE

CITY OF RIVERSIDE

3900 Main Street, Riverside, CA 92522

Phase: Plan Check
Revised .
PPD Project № 10-101

Mechanical Lead Sheet

Issued Date: 05.02.2011
Drawn By: -
Checked By: -

P- M000

Sheet №

DX SPLIT SYSTEM FAN COIL UNIT SCHEDULE

TAG	MFR & MODEL	LOCATION / MOUNTING	AREA SERVED	TYPE	SUPPLY AIR (CFM)	OSA (CFM)	ESP (IN.WG.)	ELECTRICAL V/PH	ELECTRICAL MCA	ELECTRICAL FAN FLA	COOLING COIL TOTAL (MBH)	COOLING COIL SENS (MBH)	COOLING COIL EAT DB/WB (°F)	COOLING COIL LAT DB/WB (°F)	HEATING COIL TOTAL (MBH)	HEATING COIL EAT (°F)	HEATING COIL LAT (°F)	FILTER TYPE	FILTER MERV	UNIT SIZE (L"xW"xH")	OPER. WT. (LBS)	NOTES
FC-1	MITSUBISHI PEAD-12	CEILING	ELEV MACHINE RM	CONCEALED DUCTED	350	0	0.5	208/1	1	0.57	12,000	12,000	80/67	N/A	N/A	N/A	N/A	WASHABLE	8	39x28x8	55	ALL NOTES BELOW

NOTES
1. FUSED DISCONNECT PROVIDED BY ELEC CONTRACTOR.
2. PROVIDE MATCHING OUTDOOR CONDENSER UNIT CU-1. REFER TO CONDENSER UNIT SCHEDULE.
3. SEE 1/P-M001 FOR INSTALLATION DETAIL.
4. PROVIDE WALL MOUNTED WIRED REMOTE CONTROLLER.
5. MFGR. TO PROVIDE BUILT-IN CONDENSATE PUMP PRE-WIRED IN FACTORY.
6. UNIT POWER THRU CU-1.
7. PROVIDE SECONDARY DRIP PAN. REFER TO PLUMBING DWGS FOR DRAIN DISCHARGE.

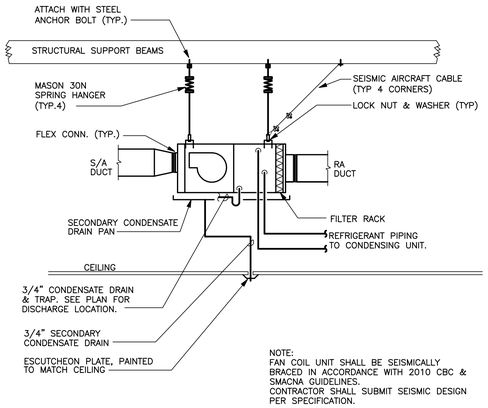

NOTE:
FAN COIL UNIT SHALL BE SEISMICALLY BRACED IN ACCORDANCE WITH 2010 CBC & SMACNA GUIDELINES. CONTRACTOR SHALL SUBMIT SEISMIC DESIGN PER SPECIFICATION.

1 DUCTED FAN COIL UNIT DETAIL
SCALE: NONE

AIR-COOLED CONDENSER UNIT SCHEDULE

TAG	MFR & MODEL	LOCATION	EQUIP. SERVED	NOM. CAP. (TONS)	EER	SEER	REFRIG	ELECTRICAL V/PH	ELECTRICAL MCA (A)	ELECTRICAL MOCP (A)	UNIT SIZE (L"Xw"xH")	OPER. WT. (LBS)	NOTES
CU-1	MITSUBISHI PUY-12	LEVEL P-2	FC-1	1.0	9.7	13.8	R-410A	208/1	13	15	32x12x24	90	ALL NOTES BELOW

NOTES
1. FUSED DISCONNECT PROVIDED BY ELEC CONTRACTOR.
2. CAPACITY RATED AT ARI STANDARD CONDITIONS.
3. PROVIDE VIBRATION ISOLATION PER SPECIFICATIONS.
4. SEE 2/P-M001 FOR INSTALLATION DETAIL.

FAN SCHEDULE

TAG	MFR & MODEL	LOCATION	AREA SERVED	DISCH	TYPE	DRIVE	AIR FLOW (CFM)	SP (IN.WG.)	MIN. EFF. (%)	FAN RPM	MTR. RPM	BHP (WATT)	ELECTRICAL HP	ELECTRICAL V/PH	UNIT SIZE (L"xW"xH")	OPER. WT. (LBS)	NOTES
EF-1	COOK GC-184	CEILING	RESTROOM	SIDE	CEILING	DIRECT	200	0.5	N/A	1405	N/A	(175)	N/A	115/1	15x13x8	25	1-4
EF-2	COOK GN-1000	INLINE	STORAGE	SIDE	INLINE	DIRECT	1500	0.5	N/A	871	1008	0.311	1/2	115/1	38x15x15	130	1-3, 5
EF-3	COOK GC-520	INLINE	RECYCLE	SIDE	INLINE	DIRECT	300	0.5	N/A	1105	N/A	(137)	N/A	115/1	21x14x12	50	1-3, 6

NOTES
1. PROVIDE FACTORY PRE-WIRED DISCONNECT.
2. PROVIDE BACKDRAFT DAMPER.
3. PROVIDE MANUAL SPEED CONTROLLER FOR BALANCING ONLY.
4. FAN TO BE CONNECTED TO LIGHT SWITCH.
5. FAN TO BE CONNECTED TO WALL TIMER.
6. FAN TO RUN CONTINUOUSLY.

DIFFUSER AND GRILLE SCHEDULE

TAG	MFR	MODEL	DESCRIPTION	FACE TYPE	FACE SIZE (IN.)	COLOR (SEE NOTE #1)	MATERIAL	OBD	
A	KRUEGER	880	AEROBLADE SUPPLY GRILLE	3/4" SPACING, DOUBLE DEFL.	SEE PLAN	WHITE	STEEL	NO	ALL NOTES BELOW
B	KRUEGER	S80	AEROBLADE RETURN/EXHAUST GRILLE	3/4" SPACING, 35° DEFL.	SEE PLAN	WHITE	STEEL	NO	ALL NOTES BELOW

NOTES
1. ANY GRILLE MOUNTED DIRECTLY ON EXPOSED DUCT SHALL MATCH COLOR OF DUCT (IF PAINTED) OR SHALL HAVE CLEAR ANODIZED FINISH (IF DUCT IS UNPAINTED).
2. ALL VISIBLE SURFACES AND DUCTWORK BEHIND FACE SHALL BE PAINTED FLAT BLACK.
3. COORDINATE WITH ARCHITECTURAL REFLECTED CEILING PLANS FOR BORDER TYPES.
4. NECK SIZE AND CFM SHOWN ON PLANS (E.G. 12x12-A-400 REFERS TO TAG "A" WITH 12x12 NECK AND 400 CFM).

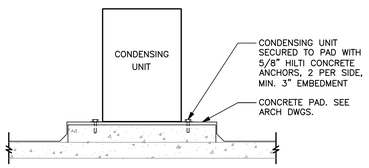

2 CONDENSING UNIT DETAIL
SCALE: NONE

Bayley Construction
3730 S. Susan St.
Suite 200
Santa Ana, CA, 92704
CA. License 734880
Tel 714-540-8863
Fax 714-556-8863

Bayley Construction
8005 S.E. 28th St.
P.O. Box 9004
Mercer Island, WA. 98040
WA. License BAYLECO034JC
Tel 206-621-8884
Fax 206-343-7728

Pacific Parking DESIGN
6 Venture, Suite 275 949.341.0066 t
Irvine, California 92618 949.341.0099 f

DLR Group WWCOT
Architecture Engineering Planning Interiors
4280 Latham Street, Suite H 951.682.0470 t
Riverside, California 92501 951.682.1801 f

GLUMAC
engineers for a sustainable future
18200 Von Karman Ave., Suite 100
Irvine, CA 92612
T. 949.833.8180 F. 949.833.0252
Job No.: 04.10.00861
Contact: JM/SCW/FN
www.glumac.com

REGISTERED PROFESSIONAL ENGINEER
R. LORNE HOLZER
No. 22941
Exp. 9-30-12
MECHANICAL
STATE OF CALIFORNIA

Public Agency Submittal: .
Issued for Bidding: .
Issued for Construction: .

Revisions:
A 09.15.2011 PERMIT SET

NOT FOR CONSTRUCTION

PHASE II:
FOX
ENTERTAINMENT
PLAZA:
PARKING GARAGE

3605 Market Street,
Riverside, CA 92501

CITY of RIVERSIDE

CITY OF RIVERSIDE
3900 Main Street, Riverside, CA 92522

Phase: Plan Check
Revised .
PPD Project № 10-101

Mechanical
Equipment Schedules &
Details

Issued Date: 05.02.2011
Drawn By: -
Checked By: -

P- M001
Sheet №

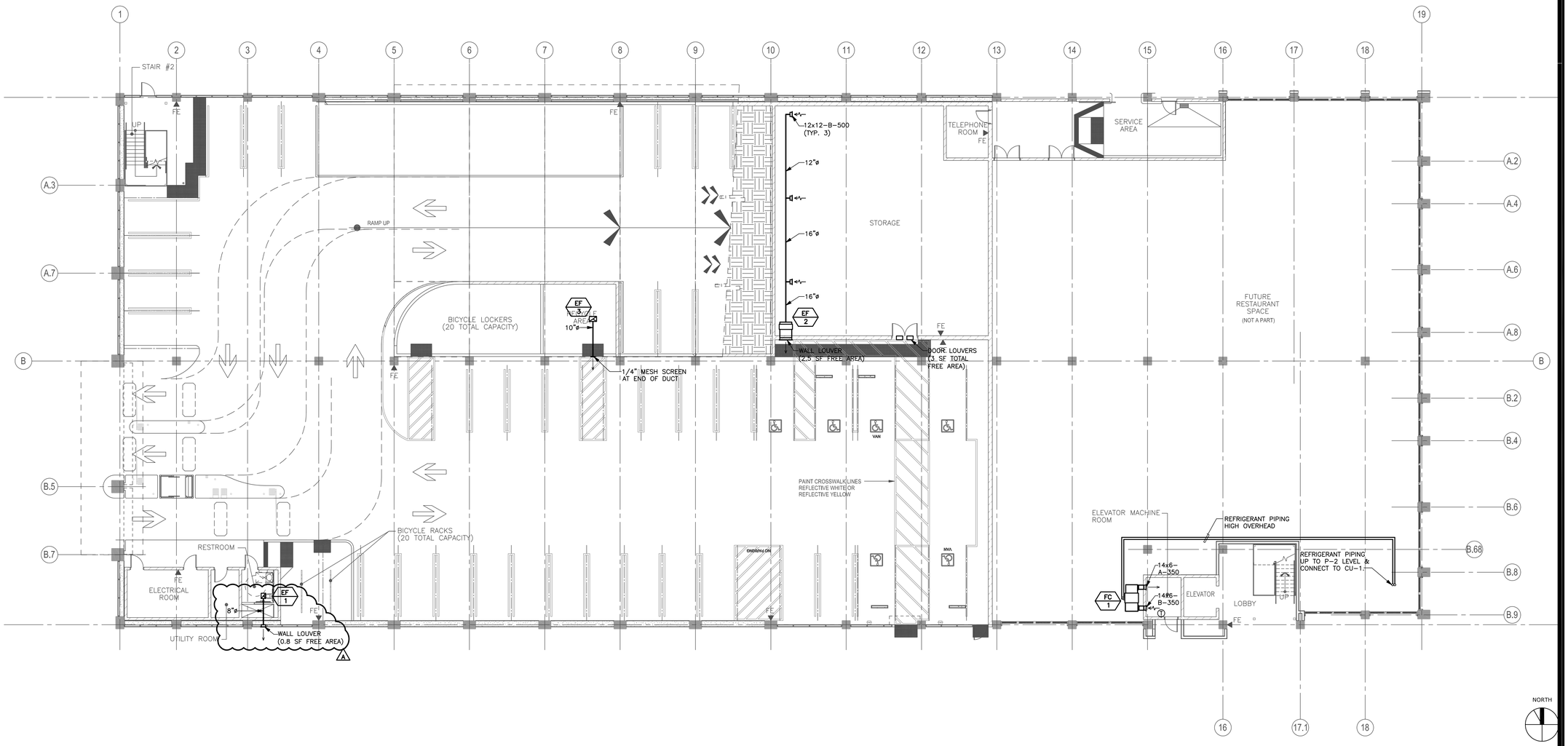

MECHANICAL PARKING GARAGE LEVEL P-1

Scale 3/32"= 1'-0" 1

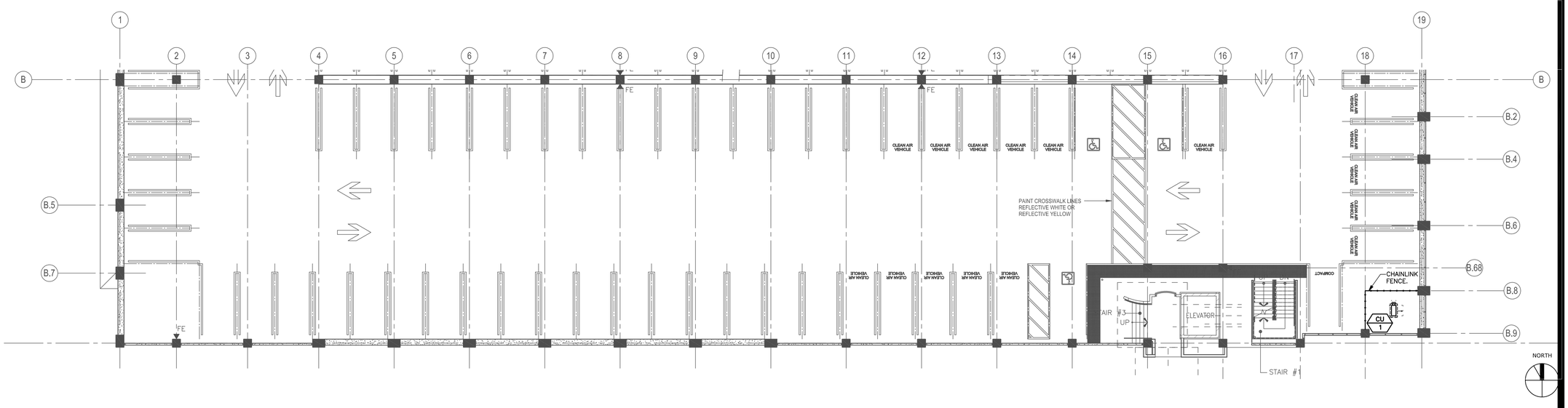

MECHANICAL PARKING GARAGE LEVEL P-2 (PARTIAL)

Scale 3/32"= 1'-0" 2

Bayley Construction
3730 S. Susan St.
Suite 200
Santa Ana, CA, 92704
CA. License 734880
Tel 714-540-8863
Fax 714-556-8863

Bayley Construction
8005 S.E. 28th St.
P.O. Box 9004
Mercer Island, WA. 98040
WA. License BAYLEC034JC
Tel 206-621-8884
Fax 206-343-7728

Pacific Parking DESIGN
6 Venture, Suite 275 949.341.0066 t
Irvine, California 92618 949.341.0099 f

DLR Group WWCOT
Architecture Engineering Planning Interiors
4280 Latham Street, Suite H 951.682.0470 t
Riverside, California 92501 951.682.1801 f

GLUMAC
engineers for a sustainable future
18200 Von Karman Ave., Suite 100
Irvine, CA 92612
T. 949.833.8190 F. 949.833.0252
Job No.: 04.10.00861
Contact: JM/SCW/FN
www.glumac.com

REGISTERED PROFESSIONAL ENGINEER
R. RICHARD HOLZER
No. 22941
Exp. 9-30-12
MECHANICAL
STATE OF CALIFORNIA

Public Agency Submittal:
Issued for Bidding:
Issued for Construction:

Revisions:

A 09.15.2011 PERMIT SET

NOT FOR CONSTRUCTION

PHASE II: FOX ENTERTAINMENT PLAZA: PARKING GARAGE

3605 Market Street,
Riverside, CA 92501

CITY of RIVERSIDE

CITY OF RIVERSIDE

3900 Main Street, Riverside, CA 92522

Phase: Plan Check
Revised -
PPD Project № 10-101

Mechanical
Parking Garage
Level P-1 & P-2

Issued Date: 05.02.2011
Drawn By: -
Checked By: -

P- M201

Sheet №

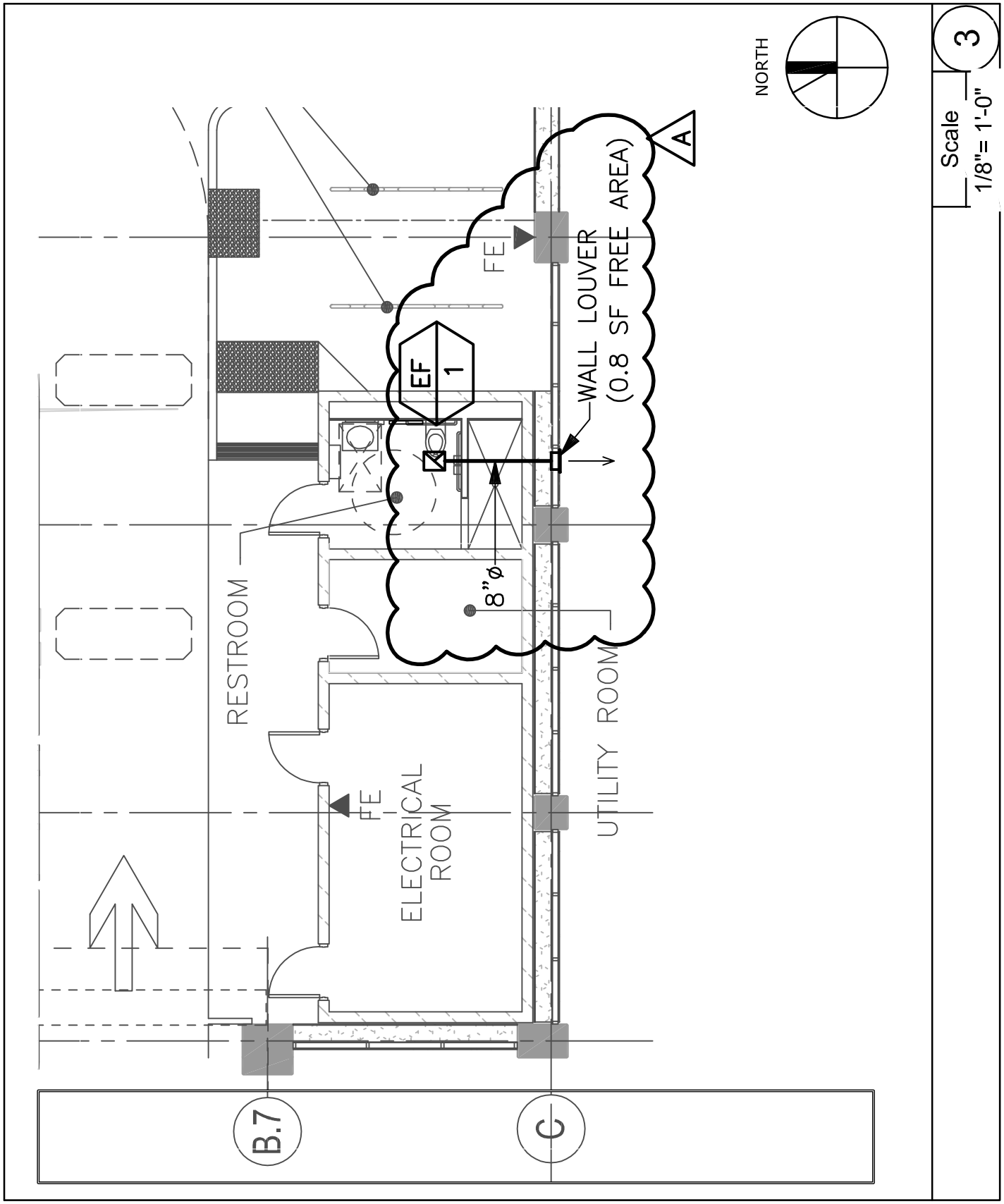

GLUMAC engineers for a sustainable future™

18200 Von Karman Ave., Suite 100
Irvine, CA 92612
T. 949.833.8190 F. 949.833.0252

Job No.: 04.10.00861
Contact: JS
www.glumac.com

DWG. TITLE:	MECHANICAL PARKING GARAGE	DATE:	9/21/2011
	LEVEL P–1	REF:	P–M201
REVISION:	PLAN CHECK SUBMITTAL	SCALE:	AS SHOWN
PROJECT:	**PHASE II FOX ENTERTAINMENT PLAZA PARKING GARAGE**	DWG. NO:	**SKM-01**

PARKING STRUCTURE
PLUMBING PLANS

GENERAL NOTES

1. THE PLUMBING SYSTEM DESIGN, INSTALLATION AND MATERIALS SHALL CONFORM TO THE 2010 EDITION OF THE CALIFORNIA PLUMBING CODE, APPLICABLE LOCAL CODES & ORDINANCES AND REQUIREMENTS OF AUTHORITIES HAVING JURISDICTION.
2. PLUMBING INSTALLATION SHALL COMPLY WITH AB1953 LOW LEAD REQUIREMENT.
3. REFER TO ARCHITECTURAL DRAWINGS FOR EXACT FIXTURE LOCATIONS, MOUNTING HEIGHTS AND COLOR.
4. THE CONTRACTOR SHALL BE RESPONSIBLE FOR VERIFYING CURRENT REQUIREMENTS WITH THE MANUFACTURER OF THE PRODUCTS USED ON THE PROJECT AND NOTIFY THE ARCHITECT/ENGINEER OF RECORD IF ANY DISCREPANCIES ARE FOUND BEFORE THE PURCHASE OF THE PRODUCT OR ANY WORK TO INSTALL OWNER-FURNISHED PRODUCTS.
5. VERIFY EXACT LOCATION & SIZE OF EXISTING WASTE, VENT AND WATER PIPING PRIOR TO START OF WORK. ANY DEVIATIONS FROM THE DRAWINGS OR SPECIFICATIONS SHALL BE BROUGHT TO THE ATTENTION OF THE ARCHITECT/ENGINEER PRIOR TO START OF WORK.
6. SCHEDULE ALL WORK WITH THE FACILITY INCLUDING CONSTRUCTION ACCESS AND STORAGE. THE CONSTRUCTION SCHEDULE PROCEDURE SHALL BE APPROVED BY THE FACILITY PRIOR TO START OF CONSTRUCTION.
7. CONTRACTOR SHALL PROVIDE DUST COVERS AS REQUIRED TO CONTAIN DUST AND DEBRIS WITHIN THE CONSTRUCTION AREA. BROOM CLEAN ALL AREAS EACH DAY. KEEP DIRT AND DUST TO A MINIMUM.
8. ALL REMOVED ITEMS DEEMED TO HAVE VALUE BY THE OWNER SHALL BE DELIVERED TO A PLACE OF STORAGE AT THE SITE AS DIRECTED. ALL OTHER ITEMS MUST BE DISPOSED OF OFF-SITE IN A LEGAL MANNER.
9. PROVIDE WATER HAMMER ARRESTORS FOR ALL QUICK CLOSING FAUCETS/DEVICES PER CPC SEC. 609.10. COORDINATE LOCATION AND QUANTITY OF ALL ACCESS PANELS. ACCESS PANELS ARE REQUIRED IN CEILINGS OR WALLS FOR ALL VALVES, CONTROLS, TRAP PRIMERS, WATER HAMMER ARRESTORS AND OTHER ITEMS REQUIRING MAINTENANCE, AND SHALL BE FURNISHED AND INSTALLED IN ACCORDANCE WITH ARCHITECTURAL SPECIFICATIONS.
10. ALL FLOOR DRAINS AND FLOOR SINKS SHALL BE PROVIDED WITH TRAP PRIMERS. TRAP PRIMERS SHALL BE INSTALLED PER MANUFACTURER'S RECOMMENDATIONS. PROVIDE ELECTRONIC ACTUATED PRIMERS AT LOCATIONS WHERE CONNECTION TO BRANCH PIPING SERVING AT LEAST ONE WATER CLOSET IS NOT AVAILABLE TO INSURE REQUIRED PERIODIC PRESSURE DIFFERENTIAL.
11. CONTRACTOR SHALL OBTAIN AND PAY FOR THE REQUIRED FEES, PERMITS AND INSPECTIONS.
12. ALL PIPING SHOWN ON DRAWINGS IS DIAGRAMMATIC AND SHALL NOT BE SCALED TO DETERMINE EXACT LOCATION. FOR GAS & CONDENSATE DRAIN CONNECTIONS SEE HVAC DWGS FOR EXACT LOCATIONS OF THESE CONNECTIONS.
13. ALL PIPING SHOWN ON DRAWINGS SHALL BE CONSIDERED NEW UNLESS OTHERWISE NOTED.
14. PROVIDE APPROVED FIRE STOPS AT ALL LOCATIONS WHERE PIPING PENETRATES FIRE RATED PARTITIONS OR SLAB.
15. PROVIDE WATER PROOF SEALANT AT FLOOR DRAIN AND PIPE FLOOR PENETRATIONS.
16. THESE DRAWINGS DO NOT INCLUDE ALL NECESSARY SAFETY REQUIREMENTS. CONTRACTOR TO COMPLY WITH SAFETY REQUIREMENTS SET FORTH BY THE LOCAL AUTHORITIES HAVING JURISDICTION.
17. TEST SYSTEM(S) IN ACCORDANCE WITH REQUIREMENTS OF THE GOVERNING AUTHORITIES.
18. PROVIDE CONCEALED MANUFACTURED CARRIERS/SUPPORTS FOR ALL WALL HUNG PLUMBING FIXTURES.
19. ALL PLUMBING WORK SHALL BE INSTALLED SO AS TO AVOID INTERFERENCE WITH ELECTRICAL AND MECHANICAL EQUIPMENT AND STRUCTURAL FRAMING.
20. ALL CLEANOUTS SHALL BE INSTALLED WHERE READILY ACCESSIBLE AND LOCATED AS PER CODE REQUIREMENTS. THE CONTRACTOR SHALL COORDINATE ALL CLEANOUT LOCATIONS WITH EQUIPMENT, CABINETS, ETC., AND THE ARCHITECT PRIOR TO ANY INSTALLATION.
21. ALL VALVES, UNIONS, ETC. TO BE SAME SIZE AS LINE SIZE UNLESS OTHERWISE INDICATED ON DRAWINGS.
22. BEFORE FABRICATION OR INSTALLATION, THE CONTRACTOR SHALL VERIFY EXACT LOCATIONS OF ALL MECHANICAL EQUIPMENT AND EQUIPMENT PROVIDED UNDER ANOTHER SECTION OF SPECIFICATIONS. EXACT ROUGH-IN LOCATIONS AND REQUIREMENTS SHALL BE COORDINATED IN FIELD.
23. IF SOILS REPORT INDICATES THAT LOCAL SOIL IS CORROSIVE, ALL UNDERGROUND PIPE AND FITTINGS SHALL BE PROTECTED IN ACCORDANCE WITH THE RECOMMENDATIONS OF THE SOILS REPORT ENGINEER.
24. ALL PLUMBING PENETRATIONS THRU THE SLAB OR STRUCTURAL MEMBERS SHALL BE CAREFULLY COORDINATED WITH THE STRUCTURAL ENGINEER PRIOR TO CONSTRUCTION.
25. ALL HORIZONTAL PIPING LINES EXTENDED AND CONNECTED TO EQUIPMENT SHALL BE RUN AT THE HIGHEST POSSIBLE ELEVATIONS.
26. THESE DRAWINGS SHALL BE READ IN CONJUNCTION WITH AND BE CONSIDERED TO BE A PART OF SEPARATE AND COMPLETE MECHANICAL SPECIFICATION.
27. THE CONTRACTOR SHALL BE RESPONSIBLE FOR PATCHING AND REPAIRING ALL AREAS WHICH ARE EXCAVATED AND/OR DAMAGED BY THEIR OPERATIONS. IN ADDITION, THE CONTRACTOR SHALL RESTORE TO THEIR ORIGINAL CONDITION ALL AREAS DAMAGED BY HIS OPERATIONS.
28. ALL CUTTING OF EXISTING PAVING, WALKS AND/OR FLOORS SHALL BE BY MACHINE SAW CUTTING. HOLES FOR PIPES IN CONCRETE WALLS OR FLOORS SHALL BE DONE USING CORE DRILLING EQUIPMENT.
29. ALL PIPING SHALL BE SUPPORTED SO AS NOT TO CONTACT ANY PORTION OF THE SUSPENDED CEILING SYSTEMS OR STUDS/GYPSUM BOARD/NOISE CONTROL ELEMENTS OF THE OVERALL STRUCTURE. TRAPEZES OR OTHER DEVICES SHALL BE USED WHERE PIPING INTERFACES WITH THE NORMAL SPACING OF HANGER WIRES FOR CEILING SYSTEMS.
30. ALL SANITARY & STORM DRAIN PIPING SHALL BE SLOPED AT 1/4 INCH PER FOOT UNLESS OTHERWISE INDICATED.
31. DISINFECTION & FLUSHING OF POTABLE WATER PIPING SHALL BE DONE IN ACCORDANCE WITH CPC SEC. 609.9

ABBREVIATIONS

A	AIR	IN	INCH OR INCHES
ABV	ABOVE	INV	INVERT
A/C	AIR CONDITIONING	KW	KILOWATT
AFF	ABOVE FINISHED FLOOR	MAX	MAXIMUM
AP	ACCESS PANEL	MBH	THOUSAND BTU PER HOUR
ARCH	ARCHITECTURAL	MC	MECHANICAL CONTRACTOR
BEL	BELOW	MECH	MECHANICAL
BEY	BEYOND	MFR	MANUFACTURER
BLDG	BUILDING	MTD	MOUNTED
BOP	BOTTOM OF PIPE	(N)	NEW
BTM	BOTTOM	N/A	NOT APPLICABLE
BV	BALL VALVE	NIC	NOT IN CONTRACT
CD	CONDENSATE DRAIN	OD	OVERFLOW DRAIN
CFH	CUBIC FEET PER HOUR	O_2	OXYGEN
CLG	CEILING	PC	PLUMBING CONTRACTOR
CONN	CONNECTION OR CONNECT	PLBG	PLUMBING
COTG	CLEANOUT-TO-GRADE	POC	POINT OF CONNECTION
CW	COLD WATER	PRV	PRESSURE RELIEF VALVE
ø	DIAMETER	PSI	POUNDS PER SQUARE INCH
DB	DRY BULB	REQ'D	REQUIRED
DTL	DETAIL	RIO	ROUGHING IN ONLY
DIA	DIAMETER	SD	STORM DRAIN
DN	DOWN	SHT	SHEET
DWG	DRAWING	SOV	SHUT-OFF VALVE
FLR	FLOOR	SS	SANITARY SEWER
GC	GENERAL CONTRACTOR	(TYP.)	TYPICAL
GPM	GALLONS PER MINUTE	V	VENT
GV	GAS VENT	VAC	VACUUM
		VTR	VENT THRU ROOF
HDR	HEADER	W	WASTE = SANITARY SEWER
HW	HOT WATER	WCO	WALL CLEANOUT
HWR	HOT WATER RETURN	W/	WITH
		WHA	WATER HAMMER ARRESTER

PIPING MATERIALS

1.	SANITARY WASTE AND VENT PIPING BELOW GRADE:	SERVICE WEIGHT NO-HUB CAST IRON WITH 4 OR 6 BAND STAINLESS STEEL COUPLINGS. PIPE WRAP ALL UNDERGROUND PIPING.
2.	SANITARY WASTE AND VENT PIPING ABOVE GRADE:	SERVICE WEIGHT CAST IRON WITH STAINLESS STEEL COUPLINGS.
3.	WATER PIPING BELOW GROUND:	TYPE 'K' COPPER WITH LEAD FREE SOLDER JOINTS.
4.	WATER PIPING ABOVE GROUND:	TYPE 'L' COPPER WITH LEAD FREE SOLDER JOINTS.
5.	CONDENSATE DRAIN PIPING:	TYPE 'M' COPPER WITH DWV FITTINGS.
6.	INSULATION OF DOMESTIC HOT WATER SUPPLY AND CONDENSATE DRAIN PIPING:	GLASS FIBER PIPE INSULATION WITH FACTORY APPLIED WHITE JACKET, J-M MICRO-LOK 750AP, 1 INCH THICK FOR PIPE SIZES 1 INCH AND SMALLER. 1 1/2 INCHES THICK FOR PIPE SIZES 1 1/4 INCHES AND LARGER.
7.	GAS PIPING ABOVE GRADE:	SCHEDULE 40 BLACK STEEL PIPE WITH BLACK MALLEABLE SCREW FITTINGS.

PLUMBING DRAWING LIST

P-P000	PLUMBING LEAD SHEET & DETAILS
P-P001	PLUMBING SITE PLAN
P-P201	PLUMBING PARKING GARAGE LEVEL P-1
P-P202	PLUMBING PARKING GARAGE LEVEL P-2
P-P203	PLUMBING PARKING GARAGE LEVEL P-3
P-P204	PLUMBING PARKING GARAGE LEVEL P-4
P-P301	PLUMBING STORM DRAIN RISER DIAGRAM
P-P401	PLUMBING DETAILS

PLUMBING FIXTURES SCHEDULE

ITEM	DESCRIPTION	TRAP ARM	WASTE	VENT	CW	HW	REMARKS
WC-1	WATER CLOSET ACCESSIBLE - 1.28 GPF BATT OP SENSOR FV (PUBLIC)	INT	4"	2"	1"	---	AMERICAN STANDARD #3351.528 'AFWALL FLOWISE ELONGATED' TOILET, WALL HUNG, VITREOUS CHINA, SIPHON JET FLUSH ACTION BOWL, 1-1/2" TOP SPUD WITH CONDENSATE CHANNEL, WITH SELECTRONIC ELECTRONIC BATTERY OPERATED SENSOR FLUSH VALVE, C.P. 1.28 GPF. AMERICAN STANDARD #5901.100 TOILET SEAT, HEAVY DUTY SOLID PLASTIC POLYPROPYLENE OPEN FRONT LESS COVER, WITH REINFORCED STAINLESS STEEL CHECK HINGE, POSTS, WASHERS AND NUTS. WITH MIFAB HORIZONTAL/VERTICAL ADJUSTABLE CARRIER MODEL MC-10/12/13 AS APPLICABLE. INSTALLATION SHALL COMPLY WITH ADA REQUIREMENTS.
L-1	LAVATORY (COUNTERTOP - ACCESSIBLE) MANUAL METERED FAUCET 0.5 GPM FLOWRATE 0.2 GAL PER USE PUBLIC	1¼"	2"	2"	½"	½"	AMERICAN STANDARD NO. 0475.047 "AQUALYN COUNTERTOP LAVATORY", 20"x17", SELF-RIMMING, FAUCET LEDGE, VITREOUS CHINA, COMPLETE WITH CHICAGO NO. 3400-4-E280SABCP, 4" CENTERS SINGLE HOLE, PUSH-BUTTON FAUCET, SUPPLY TEMPERED WATER (105°F) TO FAUCET WITH MIXING TEE BELOW LAV. WITH McGUIRE NO. 155A 1-1/4" OUTLET "OPEN GRID P.O. PLUG", McGUIRE NO. PW8090NCO 1-1/4" L.A. PATTERN P-TRAP WITH GALVANIZED NIPPLE AND CHROMIUM PLATED BRASS CASING, WITH CHICAGO NO. 1017-CP LOOSE KEY STOPS WITH RIGID SUPPLIES. COMPLY WITH ADA REQUIREMENTS.
SH-1	SHOWER 1.5 GPM	2"	2"	2"	¾"	¾"	SYMMONS NO. C-96-1-295-X "TEMPTROL SHOWER SYSTEM", COMPLETE WITH PRESSURE BALANCING MIXING VALVE WITH LEVER HANDLE, INTEGRAL STOPS, #4-295-B 2.5 GPM ALL BRASS ADJUSTABLE SPRAY, NOZZLE-TYPE HEAD WITH BACK PLATE. WITH INTEGRAL CHECK STOPS AND 1.5 GPM FLOW RESTRICTOR.
WHA-1	WATER HAMMER ARRESTOR	---	---	---	---	---	ZURN Z-1700 SERIES "SHOKTROL" WATER HAMMER ARRESTOR COMPLETE BEHIND ACCESS PANEL. INSTALL PER MANUFACTURER'S RECOMMENDATION.
AD-1	ROOF DECK/AREA DRAIN	SEE PLANS FOR SIZES					JR SMITH PROMENADE DRAIN MODEL #1409 CAST IRON BODY, COMPLETE WITH ADJUSTABLE EXTENSION SLEEVE, FLASHING COLLAR, NICKEL BRONZE 14"x14" GRATE, SUMP RECEIVER & UNDERDECK CLAMP.
ED-1	EMERGENCY DRAIN (LEVELS 2 THRU 4)	SEE PLANS FOR SIZES					JR SMITH EMERGENCY DRAIN MODEL #2110Y-B-M CAST IRON BODY, COMPLETE WITH FLASHING COLLAR, 8" DIA. DUCTILE IRON GRATE & SEDIMENT BUCKET.
ED-2	EMERGENCY DRAIN WITH FILTER (LEVEL 1)	SEE PLANS FOR SIZES					WATTS FD-410 PARKING AREA CATCH BASIN WITH FLT-116 (STORMWATER POLLUTION CONTROL FILTER) PIG DRAIN INSERT PLUS. INSTALL PER MFR INSTRUCTIONS.
TD-1	TRENCH DRAIN W/FILTER INSERT (LEVEL 1 GARAGE ENTRANCE)	SEE PLANS FOR SIZES					ZURN Z886-HDD-8601-U4 WITH NO HUB-BOTTOM OUTLET AND DUCTILE IRON GRATES. WITH KRISTAR TRENCH DRAIN FILTER INSERT MODEL #FG-TDOF4 WITH CENTER BOTTOM OUTLET.
TD-2	TRENCH DRAIN (LEVEL 1 SERVICE AREA)	2"	2"	2"	½"	---	WATTS FS-900 12"x24" FLOOR RECEPTOR WITH FLANGE, NICKEL BRONZE GRATE AND BOTTOM STRAINER. PROVIDE TRAP PRIMER CONNECTION. INSTALL FLUSH WITH FLOOR.
TP-1	TRAP PRIMER (LEVEL 1 SERVICE AREA)	---	---	---	½"	---	PPP BATTERY OPERATED TRAP PRIMER MODEL NO. MPB-500-12V. INSTALL PER MANUFACTURER'S RECOMMENDATION.
TP-2	TRAP PRIMER (PARKING ATTENDANT RESTROOM)	---	---	---	½"	---	PPP BATTERY OPERATED TRAP PRIMER MODEL NO. MPB-500-12V. INSTALL PER MANUFACTURER'S RECOMMENDATION.
FD-1	FLOOR DRAIN (LEVEL 1 UTILITY ROOM)	2"	2"	2"	---	---	ZURN MODEL No. ZN415-P FLOOR DRAIN. DURA COATED CAST IRON BODY W/ 2" NO-HUB BOTTOM OUTLET. COMPLETE W/ Z400E CHROME-PLATED NICKEL BRONZE STRAINER WITH FUNNEL DRAIN & ½" TRAP PRIMER CONNECTION WITH MEMBRANE CLAMP.
FS-1	FLOOR SINK (LEVEL 1 UTILITY ROOM AREA)	2"	2"	2"	---	---	ZURN MODEL No. ZN1910-NH-P-16 FLOOR SINK. CAST IRON BODY W/ PORCELAIN ENAMEL INTERIOR AND TOP. COMPLETE W/ ANTI-SPLASH DOME STRAINER, ½" TRAP PRIMER CONNECTION, & ⅜" HEEL-PROOF GRATE WITH MEMBRANE CLAMP.

EQUIPMENT SCHEDULE

ITEM	SERVICE	DESCRIPTION
GI-1	GREASE INTERCEPTOR	2,500 GALLON JENSEN PRECAST CONCRETE GREASE INTERCEPTOR WITH 4 - 24" CLEAR ACCESS MANHOLES WITH TRAFFIC RATER FRAMES AND COVERS. PROVIDE WITH EXTENSIONS FOR FLUSH WITH FLOOR INSTALLATION AND VENT. PROVIDE SAMPLING BOX DOWNSTREAM OF INTERCEPTOR. (NOTE: 2,500 GALLON GREASE INTERCEPTOR PROVIDES 307 DRAINAGE FIXTURE UNITS (DFUs) PER CPC TABLE 10-3)
FG-1	DOWNSPOUT FILTER	FLOGARD DOWNSPOUT FILTER MODEL FG-DS4 THUR FG-DS8 CONSTRUCTED FROM 304 STAINLESS STEEL. FILTER MEDIUM SHALL BE FOSSIL ROCK INSTALED AND MAINTAINED IN ACCORDANCE WITH MANUFACTURER RECOMMENDATIONS.

COLD WATER BOOSTER PUMP SCHEDULE

ITEM	SERVICE	MFR AND MODEL	TYPE	CAPACITY GPM	CAPACITY HEAD (FT)	HP	RPM	V	PH	WT	REMARKS
BP-1 (LOCATED IN PARKING GARAGE)	COLD WATER BOOSTER PUMP (ALSO SERVES BB/EH)	WEIL AQUA/SYNCRO FLO MODEL No. 22OK03XXX -3H-2A-SWF44-1 NSF	DUPLEX, VARIABLE SPEED	66 EACH PUMP	70	3 EACH PUMP	3450	480	3	950	PRE-PACKAGED, SKID MOUNTED, VARIABLE SPEED END SUCTION CENTRIFUGAL PUMPS, ANSI/NSF STD #61 ANNEX G, CALIFORNIA AB1953 COMPLIANT, U.L. CERTIFIED AND TESTED CONTROL PANEL, ASME APPROVED 53 GAL. HYDRO-PNEUMATIC TANK LOCATED ON BB/EH ROOF. OPERATING WT. OF TANK = 652 LBS

PARKING GARAGE/BLACKBOX EXHIBIT HALL HYDRAULIC CALCS

TOTAL DOMESTIC WTR DEMAND (327 FU) = 115 GPM
PRESSURE AVAILABLE: (MIN.=54.0 PSI MAX.=66.0 PSI) = 54.0 PSI
PRESSURE LOSS THRU 3" WTR MTR @ 115 GPM FLOW = -2.0 PSI
PRESSURE LOSS THRU 3" RPBFP @ 115 GPM FLOW = -12.0 PSI

PRESSURE AVAILABLE DOWNSTREAM OF RPBFP = 40.0 PSI

LONGEST PIPE RUN (INCL 20% FTTG LOSS) = 415'
PRESS. LOSS DUE TO STATIC HEIGHT (30.5'/2.31) = -13.20 PSI
PRESS. REQD AT FURTHEST WC = -25.0 PSI
BOOSTER PUMP PRESSURE ADDITION = 25.0 PSI
PRESSURE AVAIL FOR PIPE FRICTION LOSS = 26.80 PSI

MAX. PRESSURE AVAIL FOR 100' PIPE FRICTION LOSS = (26.80/415')x100 = 6.45 PSI
PIPING SIZED ON 5.0 PSI/100'
(MAX PIPE VELOCITY FOR: CW PIPING=8.0 FPS, HW PIPING=5.0 FPS)

PIPE SIZING SCHEDULE (BASED ON 5.0PSI/100' PIPE FRICTION LOSS)

SIZE	COLD WATER GPM	COLD WATER F.V.	COLD WATER F.T.	COLD WATER VEL. (FPS)	HOT WATER GPM	HOT WATER F.T.	HOT WATER VEL. (FPS)
1/2"	3	0	3	3.5	3	3	3.5
3/4"	7	0	8	4.0	7	8	4.0
1"	13	0	18	5.0	13	18	5.0
1-1/4"	28	11	49	6.0	22	34	5.0
1-1/2"	38	25	78	6.0	30	54	5.0
2"	75	128	249	8.0	50	127	5.0
2-1/2"	105	270	406	8.0	70	225	5.0
3"	180	775	809	8.0			

PLUMBING LEGEND

SYMBOL	DESCRIPTION
	BALL VALVE
	UNION
	CAP OR PLUG
	BLIND FLANGE
	CONCENTRIC REDUCER
	ECCENTRIC REDUCER
	AQUASTAT
WHA	WATER HAMMER
PG	PRESSURE GAUGE WITH COCK
T	THERMOMETER
CO	CLEANOUT PLUG
FCO	FLOOR CLEANOUT
YCO	YARD CLEANOUT
TT	TEST TEE
WH	WALL HYDRANT
HB	HOSE BIBB
YH	YARD HYDRANT
FD	FLOOR DRAIN
FS	FLOOR SINK
	HUB DRAIN
	DIRECTION OF SLOPE
	DIRECTION OF FLOW
	PIPE UP
	PIPE DOWN
	PIPE DROP
	TOP CONNECTION - BRANCH LINE
	BOTTOM CONNECTION - BRANCH LINE
	COLD WATER
	HOT WATER (120°F)
SAN	SANITARY SEWER
	PIPING BELOW GRADE
	WASTE
	VENT
PD	PUMPED DRAIN (WASTE)
OCD	OVERFLOW CONDENSATE DRAIN
PCD	PUMPED CONDENSATE DRAIN

BAYLEY CONSTRUCTION

Bayley Construction
3730 S. Susan St.
Suite 200
Santa Ana, CA, 92704
CA. License 734880
Tel 714-540-8863
Fax 714-556-8863

Bayley Construction
8005 S.E. 28th St.
P.O. Box 9004
Mercer Island, WA. 98040
WA. License BAYLEC034JC
Tel 206-621-8884
Fax 206-343-7728

Pacific Parking DESIGN
6 Venture, Suite 275 949.341.0066 t
Irvine, California 92618 949.341.0099 f

DLR Group WWCOT
Architecture Engineering Planning Interiors
4280 Latham Street, Suite H 951.682.0470 t
Riverside, California 92501 951.682.1801 f

GLUMAC
engineers for a sustainable future™
18200 Von Karman Ave., Suite 100
Irvine, CA 92612
T. 949.833.8180 F. 949.833.0252
Job No.: 04.10.08861
Contact: JM/SCW/FN
www.glumac.com

REGISTERED PROFESSIONAL ENGINEER RICHARD HOLZER No. 22941 Exp. 9-30-12 MECHANICAL STATE OF CALIFORNIA

Public Agency Submittal:
Issued for Bidding:
Issued for Construction:

Revisions:
A 09.15.2011 PERMIT SET

NOT FOR CONSTRUCTION

PHASE II:
FOX ENTERTAINMENT PLAZA:
PARKING GARAGE

3605 Market Street,
Riverside, CA 92501

CITY of RIVERSIDE

CITY OF RIVERSIDE

3900 Main Street, Riverside, CA 92522

Phase: Plan Check
Revised -
PPD Project № 10-101

Plumbing Lead Sheet and Details

Issued Date: 05.02.2011
Drawn By: -
Checked By: -

P- P000

Sheet №

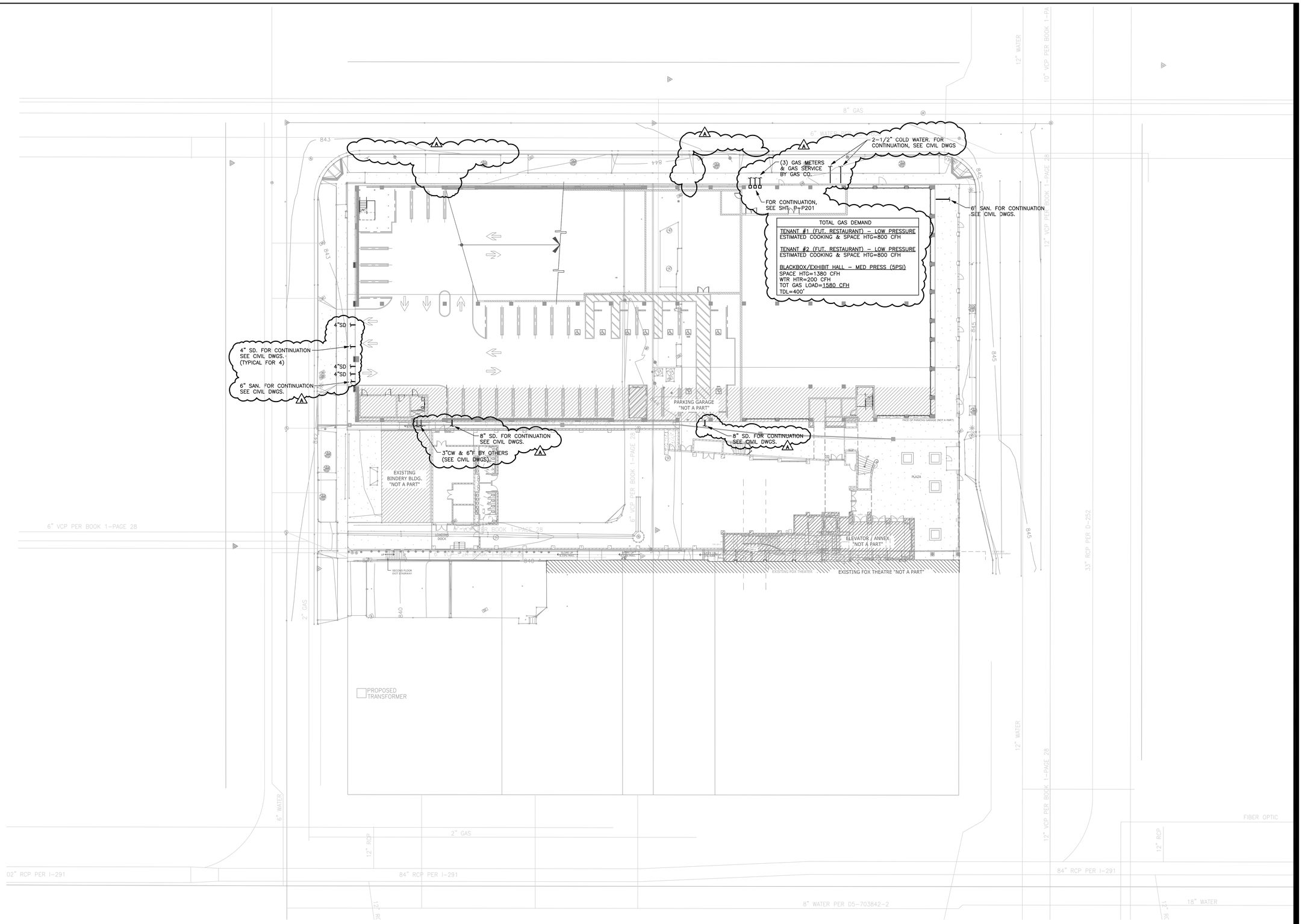

PROJECT NORTH

0' 10' 20' 40' 80'

PLUMBING SITE PLAN

Scale 1" = 20'-0"

1

Bayley Construction
3730 S. Susan St.
Suite 200
Santa Ana, CA, 92704
CA. License 734880
Tel 714-540-8863
Fax 714-556-8863

Bayley Construction
8005 S.E. 28th St.
P.O. Box 9004
Mercer Island, WA. 98040
WA. License BAYLEC034JC
Tel 206-621-8884
Fax 206-343-7728

Pacific Parking DESIGN
6 Venture, Suite 275 949.341.0066 t
Irvine, California 92618 949.341.0099 f

DLR Group WWCOT
Architecture Engineering Planning Interiors
4280 Latham Street, Suite H 951.682.0470 t
Riverside, California 92501 951.682.1801 f

GLUMAC
engineers for a sustainable future
18200 Von Karman Ave., Suite 100
Irvine, CA 92612
T. 949.833.8180 F. 949.833.0252
Job No.: 04.10.00861
Contact: JM/SCW/FN
www.glumac.com

REGISTERED PROFESSIONAL ENGINEER
R. GORDON HOLZER
No. 22941
Exp. 9-30-12
MECHANICAL
STATE OF CALIFORNIA

Public Agency Submittal:
Issued for Bidding:
Issued for Construction:

Revisions:

A 09.15.2011 PERMIT SET

NOT FOR CONSTRUCTION

PHASE II: FOX ENTERTAINMENT PLAZA: PARKING GARAGE

3605 Market Street,
Riverside, CA 92501

CITY of RIVERSIDE

CITY OF RIVERSIDE

3900 Main Street, Riverside, CA 92522

Phase: Plan Check
Revised .
PPD Project № 10-101

Plumbing Site Plan

Issued Date: 05.02.2011
Drawn By: -
Checked By: -

P- P100

Sheet №

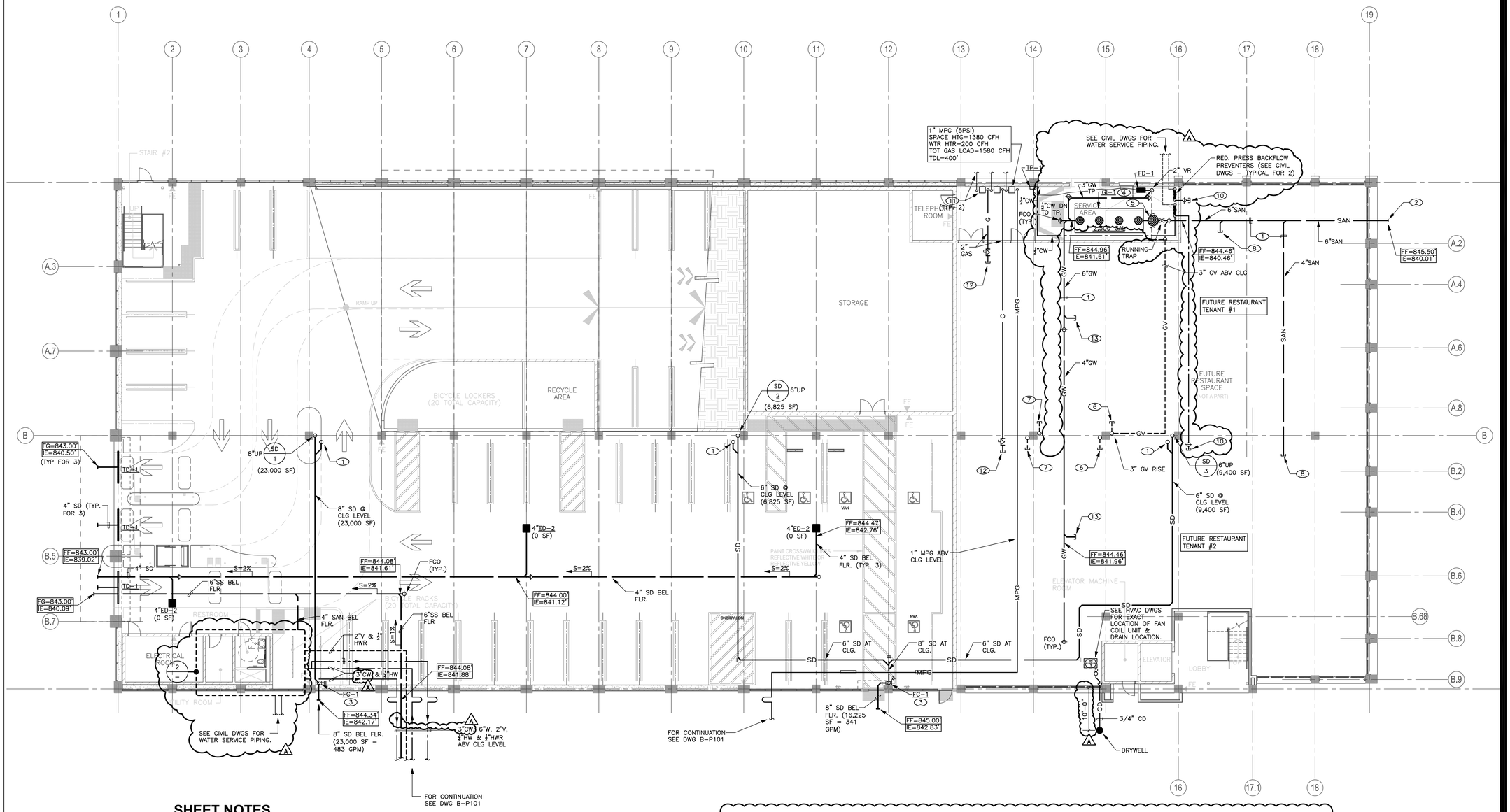

SHEET NOTES

1. 4" SD UP TO ED-1 ABOVE.
2. FOR CONTINUATION, SEE CIVIL DWGS.
3. FLOGARD DOWNSPOUT FILTER.
4. 2500 GAL GREASE INTERCEPTOR.
5. SAMPLE BOX.
6. CAP 3" GV ABV CLG FOR FUTURE TENANT.
7. CAP 3" SAN VENT ABV CLG FOR FUTURE TENANT.
8. CAP 4" SAN WASTE BEL FLR FOR FUTURE TENANT.
9. 2-1/2" CW BEL FLR.
10. CAP 2-1/2" CW ABV CLG FOR FUTURE TENANT.
11. GAS METER & SERVICE BY GAS CO.
12. CAP 2" GAS (800 CFH) ABV CLG FOR FUTURE TENANT.
13. CAP 4" GW BEL FLR FOR FUTURE TENANT.

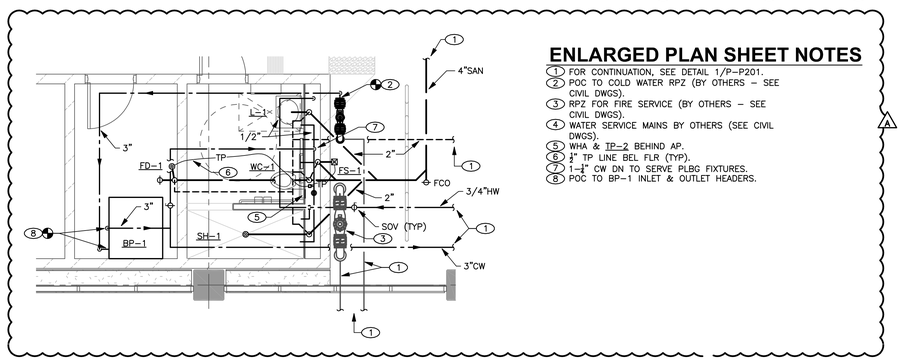

ENLARGED PLAN SHEET NOTES

1. FOR CONTINUATION, SEE DETAIL 1/P-P201.
2. POC TO COLD WATER RPZ (BY OTHERS – SEE CIVIL DWGS).
3. RPZ FOR FIRE SERVICE (BY OTHERS – SEE CIVIL DWGS).
4. WATER SERVICE MAINS BY OTHERS (SEE CIVIL DWGS).
5. WHA & TP-2 BEHIND AP.
6. 3/4" TP LINE BEL FLR (TYP).
7. 1-1/4" CW DN TO SERVE PLBG FIXTURES.
8. POC TO BP-1 INLET & OUTLET HEADERS.

1 ENLARGED PLUMBING PLAN

SCALE: 1/4"=1'-0"

NORTH

Scale 3/32"= 1'-0"

PLUMBING PARKING GARAGE LEVEL P-1

Bayley Construction
3730 S. Susan St.
Suite 200
Santa Ana, CA, 92704
CA. License 734880
Tel 714-540-8863
Fax 714-556-8863

Bayley Construction
8005 S.E. 28th St.
P.O. Box 9004
Mercer Island, WA. 98040
WA. License BAYLEC034JC
Tel 206-621-8884
Fax 206-343-7728

Pacific Parking DESIGN
6 Venture, Suite 275 949.341.0066 t
Irvine, California 92618 949.341.0099 f

DLR Group WWCOT
Architecture Engineering Planning Interiors
4280 Latham Street, Suite H 951.682.0470 t
Riverside, California 92501 951.682.1801 f

GLUMAC
engineers for a sustainable future
18200 Von Karman Ave., Suite 100
Irvine, CA 92612
T. 949.833.8180 F. 949.833.0252
Job No.: 04.10.00861
Contact: JM/SCW/FN
www.glumac.com

REGISTERED PROFESSIONAL ENGINEER
R. EDWARD HOLZER
No. 22941
Exp. 9-30-12
MECHANICAL
STATE OF CALIFORNIA

Public Agency Submittal:
Issued for Bidding:
Issued for Construction:

#	Revisions:
A	09.15.2011 PERMIT SET

NOT FOR CONSTRUCTION

PHASE II: FOX ENTERTAINMENT PLAZA: PARKING GARAGE

3605 Market Street,
Riverside, CA 92501

CITY of RIVERSIDE

CITY OF RIVERSIDE

3900 Main Street, Riverside, CA 92522

Phase: Plan Check
Revised .
PPD Project № 10-101

Plumbing
Parking Garage
Level P-1

Issued Date: 05.02.2011
Drawn By: -
Checked By: -

P- P201

Sheet №

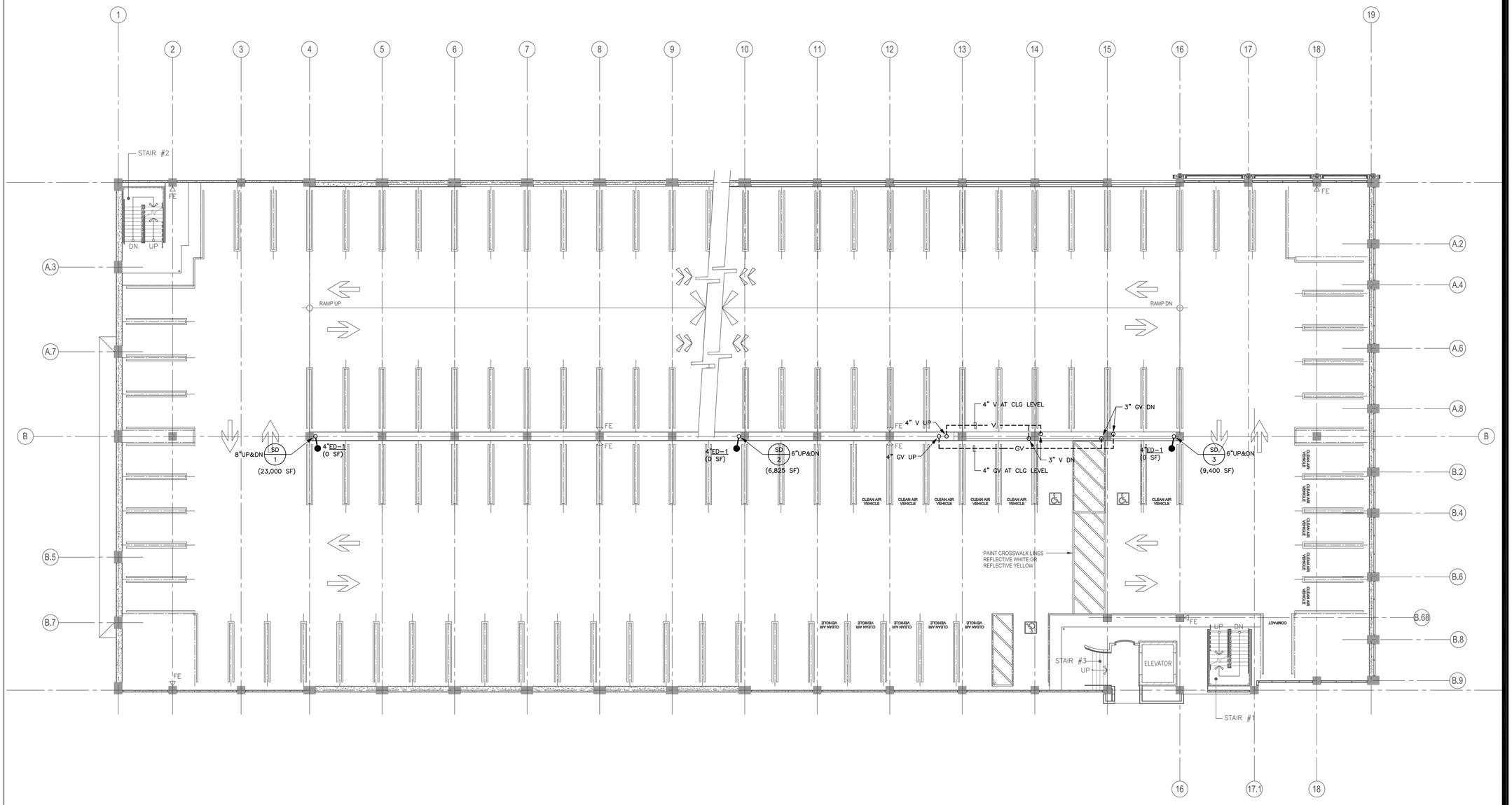

PLUMBING PARKING GARAGE LEVEL P-2

Scale 3/32"= 1'-0"

1

Bayley Construction
3730 S. Susan St.
Suite 200
Santa Ana, CA, 92704
CA. License 734880
Tel 714-540-8863
Fax 714-556-8863

Bayley Construction
8005 S.E. 28th St.
P.O. Box 9004
Mercer Island, WA. 98040
WA. License BAYLEC034JC
Tel 206-621-8884
Fax 206-343-7728

Pacific Parking DESIGN
6 Venture, Suite 275 949.341.0066 t
Irvine, California 92618 949.341.0099 f

DLR Group WWCOT
Architecture Engineering Planning Interiors
4280 Latham Street, Suite H 951.682.0470 t
Riverside, California 92501 951.682.1801 f

GLUMAC
engineers for a sustainable future
18200 Von Karman Ave., Suite 100
Irvine, CA 92612
T. 949.833.8190 F. 949.833.0252
Job No.: 04.10.00861
Contact: JM/SCW/FN
www.glumac.com

REGISTERED PROFESSIONAL ENGINEER
RICHARD HOLZER
No. 22941
Exp. 9-30-12
MECHANICAL
STATE OF CALIFORNIA

Public Agency Submittal: .
Issued for Bidding: .
Issued for Construction: .

Revisions:

A 09.15.2011 PERMIT SET

NOT FOR CONSTRUCTION

PHASE II: FOX ENTERTAINMENT PLAZA: PARKING GARAGE

3605 Market Street,
Riverside, CA 92501

CITY of RIVERSIDE

CITY OF RIVERSIDE

3900 Main Street, Riverside, CA 92522

Phase: Plan Check
Revised .
PPD Project № 10-101

Plumbing
Parking Garage
Level P-2

Issued Date: 05.02.2011
Drawn By: -
Checked By: -

P- P202

Sheet №

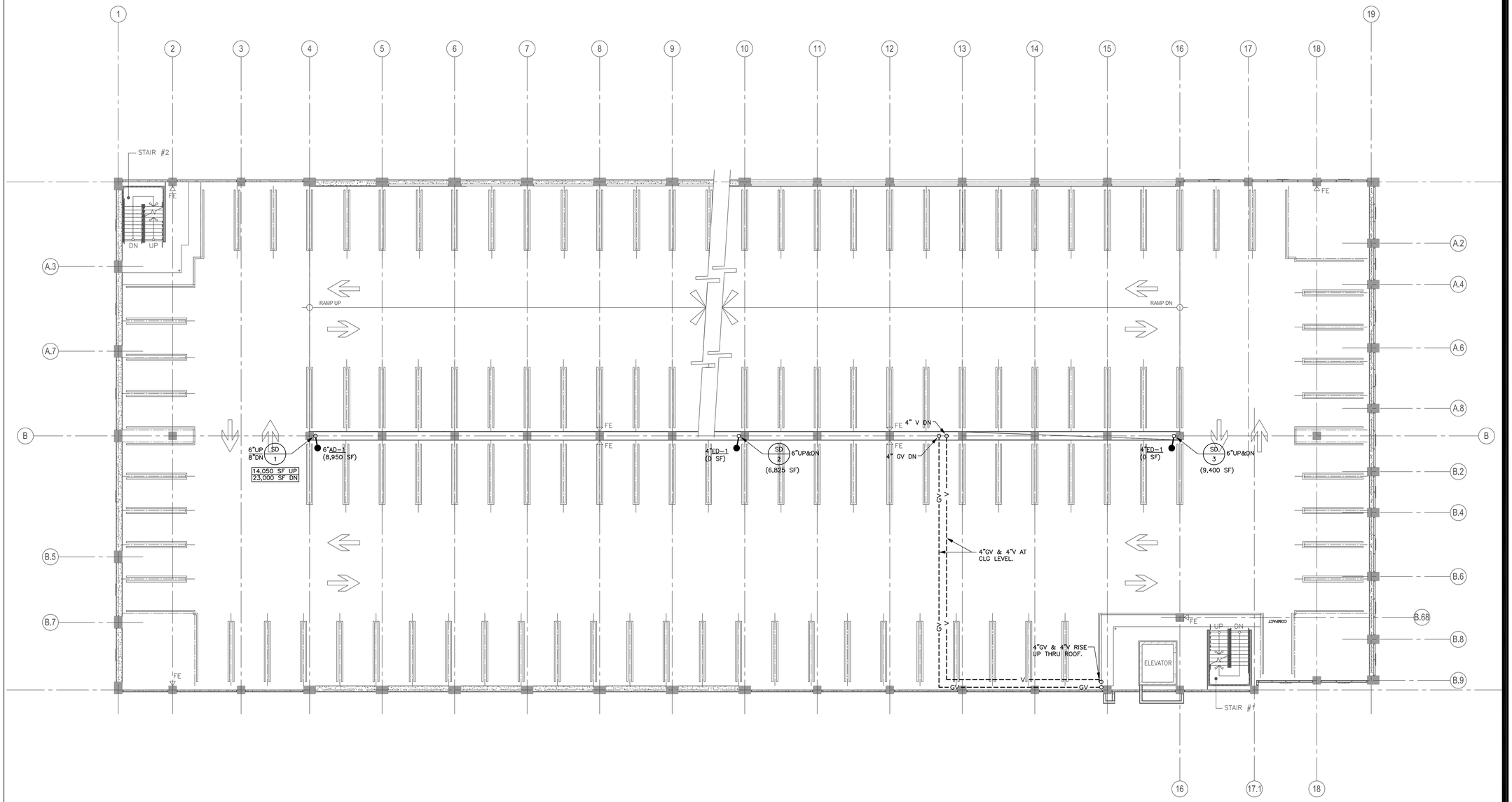

PLUMBING PARKING GARAGE LEVEL P-3

Scale
3/32"= 1'-0"

1

NORTH

Bayley Construction
3730 S. Susan St.
Suite 200
Santa Ana, CA, 92704
CA. License 734880
Tel 714-540-8863
Fax 714-556-8863

Bayley Construction
8005 S.E. 28th St.
P.O. Box 9004
Mercer Island, WA. 98040
WA. License BAYLEC034JC
Tel 206-621-8884
Fax 206-343-7728

BAYLEY CONSTRUCTION

Pacific Parking DESIGN
6 Venture, Suite 275 949.341.0066 t
Irvine, California 92618 949.341.0099 f

DLR Group WWCOT
Architecture Engineering Planning Interiors
4280 Latham Street, Suite H 951.682.0470 t
Riverside, California 92501 951.682.1801 f

GLUMAC
engineers for a sustainable future
18200 Von Karman Ave., Suite 100
Irvine, CA 92612
T. 949.833.8190 F. 949.833.0252
Job No.: 04.10.00861
Contact: JM/SCW/FN
www.glumac.com

REGISTERED PROFESSIONAL ENGINEER
RICHARD HOLZER
No. 22941
Exp. 9-30-12
MECHANICAL
STATE OF CALIFORNIA

Public Agency Submittal: .
Issued for Bidding: .
Issued for Construction: .

Revisions:

#		
A	09.15.2011	PERMIT SET

NOT FOR CONSTRUCTION

PHASE II: FOX ENTERTAINMENT PLAZA: PARKING GARAGE

3605 Market Street,
Riverside, CA 92501

CITY of RIVERSIDE

CITY OF RIVERSIDE

3900 Main Street, Riverside, CA 92522

Phase: Plan Check
Revised .
PPD Project № 10-101

Plumbing
Parking Garage
Level P-3

Issued Date: 05.02.2011
Drawn By: -
Checked By: -

P- P203

Sheet №

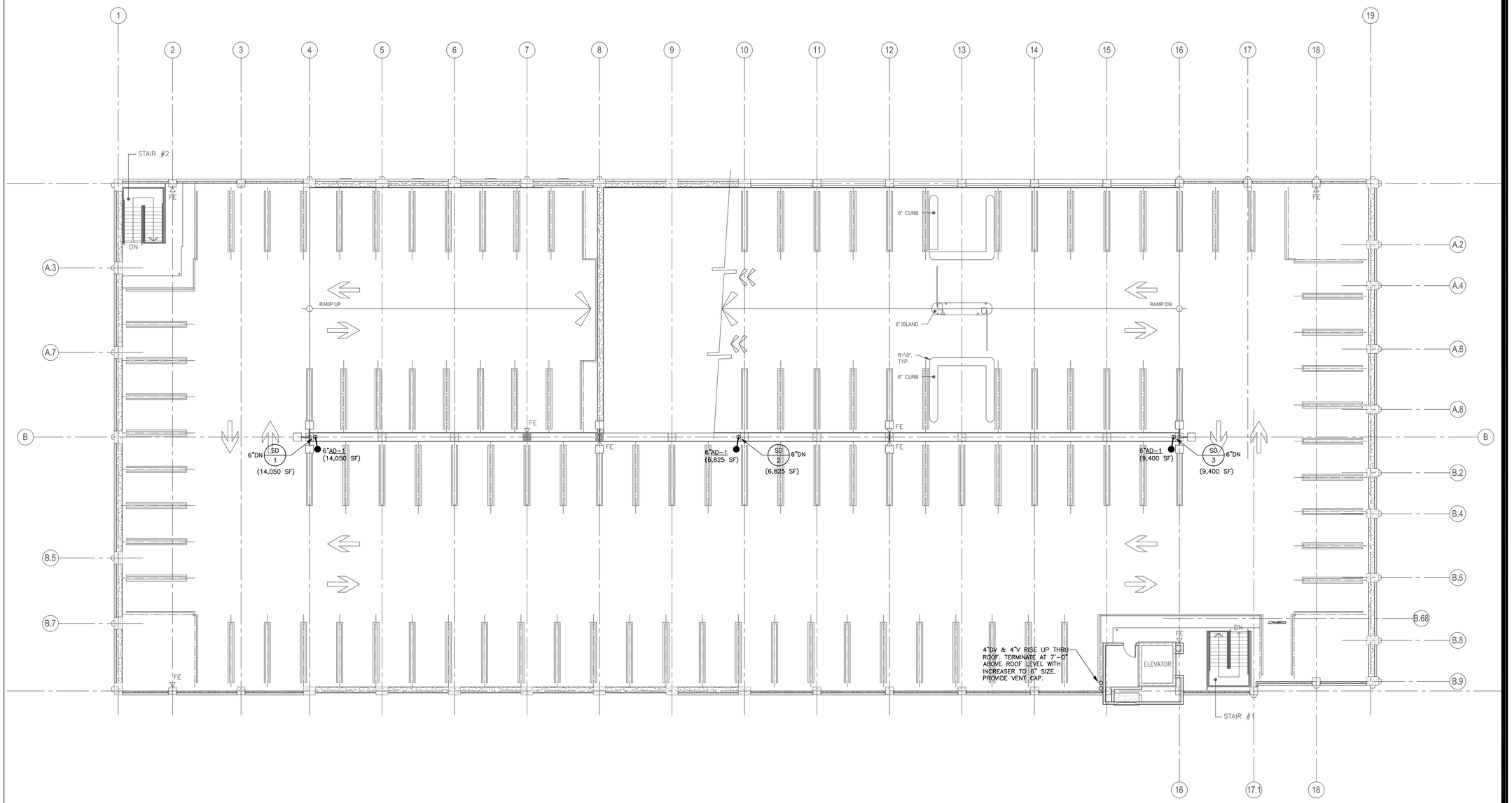

PLUMBING PARKING GARAGE LEVEL P-4

Scale 3/32"= 1'-0"

1

NORTH

Bayley Construction
3730 S. Susan St.
Suite 200
Santa Ana, CA, 92704
CA. License 734880
Tel 714-540-8863
Fax 714-556-8863

Bayley Construction
8005 S.E. 28th St.
P.O. Box 9004
Mercer Island, WA. 98040
WA. License BAYLEC034JC
Tel 206-621-8884
Fax 206-343-7728

Pacific Parking DESIGN
6 Venture, Suite 275 949.341.0066 t
Irvine, California 92618 949.341.0099 f

DLR Group WWCOT
Architecture Engineering Planning Interiors
4280 Latham Street, Suite H 951.682.0470 t
Riverside, California 92501 951.682.1801 f

GLUMAC
engineers for a sustainable future
18200 Von Karman Ave., Suite 100
Irvine, CA 92612
T. 949.833.8190 F. 949.833.0252
Job No.: 04.10.00861
Contact: JM/SCW/FN
www.glumac.com

REGISTERED PROFESSIONAL ENGINEER
RICHARD HOLZER
No. 22941
Exp. 9-30-12
MECHANICAL
STATE OF CALIFORNIA

Public Agency Submittal: .
Issued for Bidding: .
Issued for Construction: .

#	Revisions:
A	09.15.2011 PERMIT SET

NOT FOR CONSTRUCTION

PHASE II: FOX ENTERTAINMENT PLAZA: PARKING GARAGE

3605 Market Street,
Riverside, CA 92501

CITY of RIVERSIDE

CITY OF RIVERSIDE

3900 Main Street, Riverside, CA 92522

Phase: Plan Check
Revised -
PPD Project № 10-101

Plumbing
Parking Garage
Level P-4

Issued Date: 05.02.2011
Drawn By: -
Checked By: -

P- P204

Sheet №

NOTES

1. STORM DRAIN SYSTEM SIZING IS BASED ON RAINFALL RATE OF 2"/HR IN CITY OF RIVERSIDE, CA.
2. PIPING LAYOUT IS DIAGRAMMATIC AND MAY NOT SHOW ALL THE OFFSETS & PIPE FITTINGS NECESSARY FOR A COMPLETE FUNCTIONAL SYSTEM.

A

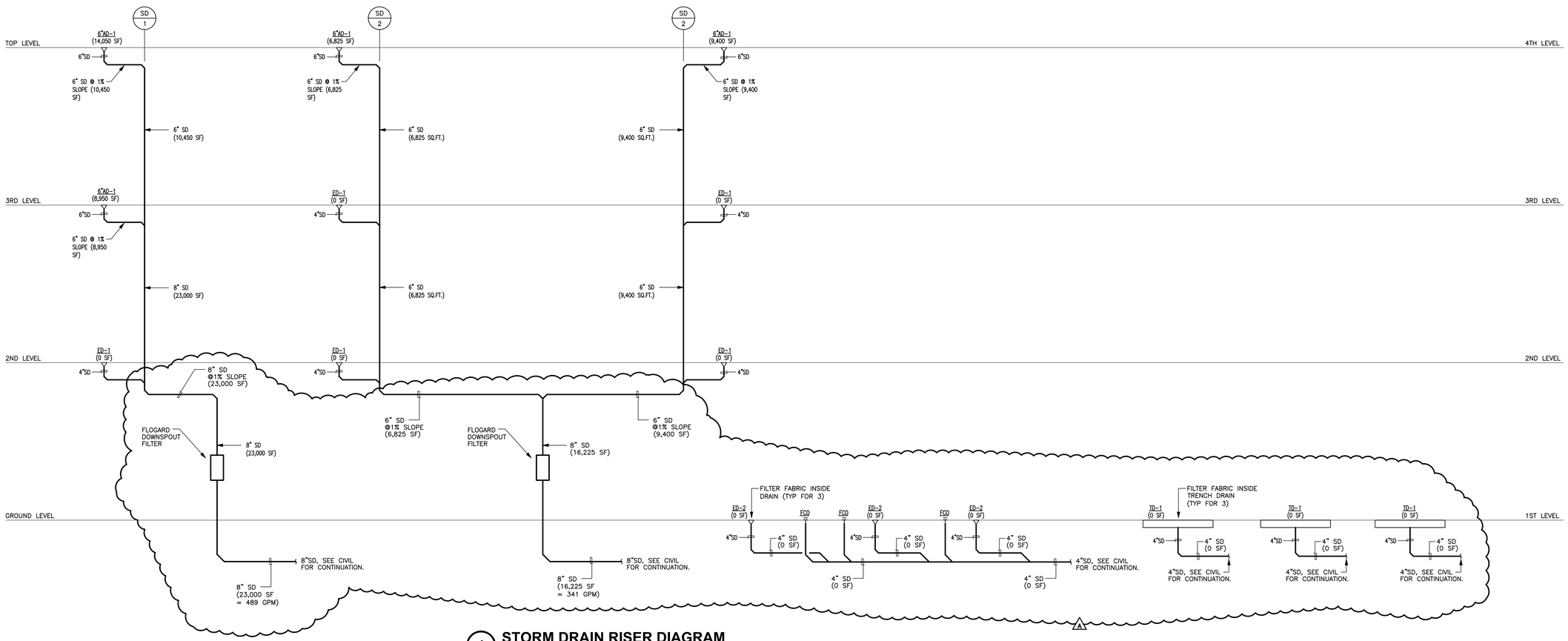

1 **STORM DRAIN RISER DIAGRAM**
SCALE: NTS

Bayley Construction
3730 S. Susan St.
Suite 200
Santa Ana, CA, 92704
CA. License 734880
Tel 714-540-8863
Fax 714-556-8863

Bayley Construction
8005 S.E. 28th St.
P.O. Box 9004
Mercer Island, WA. 98040
WA. License BAYLEC034JC
Tel 206-621-8884
Fax 206-343-7728

BAYLEY CONSTRUCTION

Pacific Parking DESIGN
6 Venture, Suite 275 949.341.0066 t
Irvine, California 92618 949.341.0099 f

DLR Group WWCOT
Architecture Engineering Planning Interiors
4280 Latham Street, Suite H 951.682.0470 t
Riverside, California 92501 951.682.1801 f

GLUMAC
engineers for a sustainable future
18200 Von Karman Ave., Suite 100
Irvine, CA 92612
T. 949.833.8190 F. 949.833.0252
Job No.: 04.10.00861
Contact: JM/SCW/FN
www.glumac.com

REGISTERED PROFESSIONAL ENGINEER
R. LOWELL HOLZER
No. 22941
Exp. 9-30-12
MECHANICAL
STATE OF CALIFORNIA

Public Agency Submittal: .
Issued for Bidding: .
Issued for Construction: .

Revisions:

A 09.15.2011 PERMIT SET

NOT FOR CONSTRUCTION

PHASE II:
FOX
ENTERTAINMENT
PLAZA:
PARKING GARAGE

3605 Market Street,
Riverside, CA 92501

CITY of RIVERSIDE

CITY OF RIVERSIDE

3900 Main Street, Riverside, CA 92522

Phase: Plan Check
Revised .
PPD Project № 10-101

Plumbing Storm Drain Riser Diagram

Issued Date: 05.02.2011
Drawn By: -
Checked By: -

P- P301

Sheet №

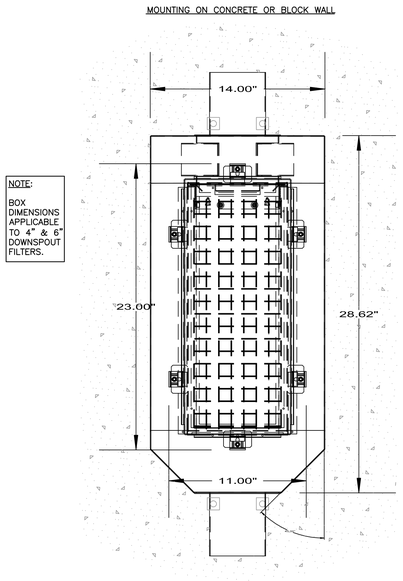

10 TYPICAL FLOGARD DNSOUT FILTER

SCALE: N.T.S.

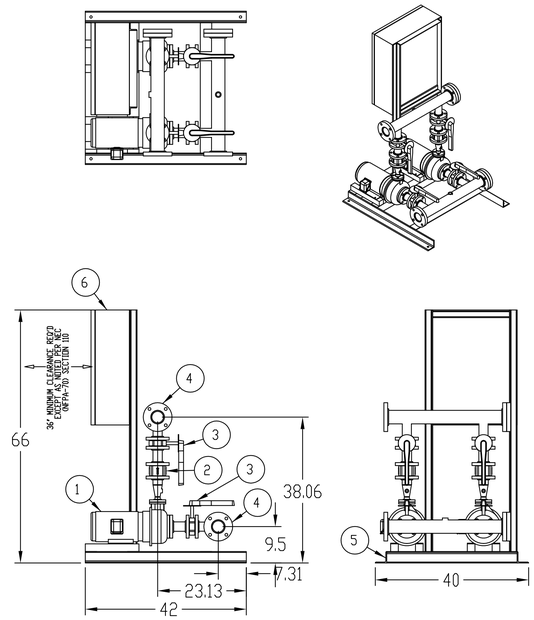

ITEM NO.	DESCRIPTION	Inventory #	QTY.
1	CCES PUMP MODEL 22K W/ 3HP MOTOR		2
2	2" CHECK VALVE AND SYSTEM PIPING	S709-3101-301	2
3	BUTTERFLY VALVE 150# LUG 2"	42-447-3020	4
4	3" HEADER	S717-3372-000	2
5	SYSTEM SKID BASE	S700-0024-301	1
6	SYSTEM POWER AND CONTROL PANEL		1

NOTES:

1. ALL DIMENSIONS SUBJECT TO CHANGE WITHOUT NOTICE
2. PURGE VALVE DRAIN LINE TO BE PIPED TO FLOOR DRAIN IN PROXIMITY OF BOOSTER SYSTEM (BY OTHERS)
3. SEE DATA SHEET FOR L/H OR R/H HEADERS ENTRY/EXIT CONNECTION
4. SEE DATA SYSTEM SHEET FOR HEADER CONNECTION TYPE

SYNCROFLO PACKAGED PUMPING SYSTEMS COMPLY WITH OSHA REGULATIONS AND FEDERAL REGULATION 29 CFR 1910.399. THE ENTIRE PACKAGED SYSTEM IS THIRD PARTY CERTIFIED.

7 DOMESTIC WATER BOOSTER PUMP DETAIL

SCALE: NONE

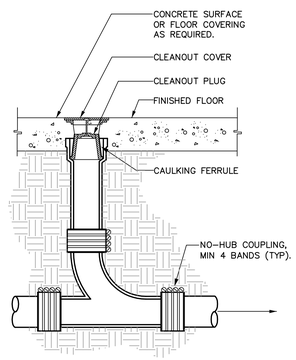

9 FLOOR CLEANOUT

SCALE: NONE

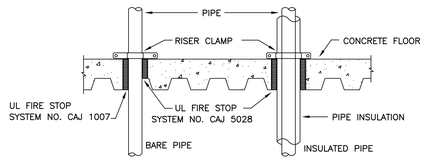

NOTES

1. INSTALLATION SHALL BE A U.L. LISTED SYSTEM W/ THE UNIFORM BUILDING CODE.
2. PENETRATIONS THRU FIRE RATED FLOOR ASSEMBLIES SHALL BE SIMILAR TO ABOVE.
3. WHERE APPROVED A PRE-MANUFACTURED FIRESTOPPING SYSTEM AS MFR'D BY "PROSET" OR EQUAL MAY BE PROVIDED IN LIEU OF THE DETAILS ABOVE. (UL # 1479)

6 FLOOR PENETRATION DETAIL

SCALE: N.T.S.

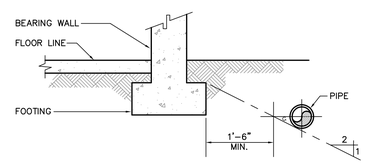

NOTE:

1. COORDINATE EXACT PIPING LOCATION WITH STRUCTURAL AND/OR CIVIL ENGINEER.
2. COORDINATE EXCAVATION & BACKFILL WITH CIVIL ENGINEER.

4 PLUMBING LINES AT FOOTINGS

SCALE: NONE

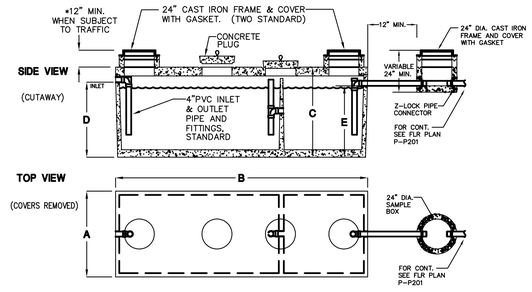

MODEL NUMBER	LIQUID CAPACITY-GALLONS	WIDTH 'A'	OVERALL LENGTH 'B'	TANK HEIGHT 'C'	INLET 'D'	OUTLET 'E'	MINIMUM EXCAVATION WIDTH	MINIMUM EXCAVATION LENGTH	DEPTH OF BURY	MAX. LIFT WEIGHT
KJZ2500G	2500	5'-9"	16'-10"	6'-0"	5'-0"	4'-9"	6'-9"	17'-10"	5' MAX.	22,700

NOTES:

1. TANK DESIGNED FOR H-20 TRAFFIC WHEEL LOAD WITH DRY SOIL CONDITIONS (WTR TABLE BEL TANK)
2. SUITABLE NATIVE OR SUB-BASE SHALL BE PREPARED TO HANDLE ANTICIPATED LOADS. THE EXCAVATION SHALL BE BEDDED WITH SUITABLE GRANULAR MATERIAL AND SHALL BE COMPACTED TO 90% MAXIMUM DRY DENSITY, OR TO REQUIREMENTS OF THE PROJECT GEOTECHNICAL ENGINEER.
3. INSTALLATION SHALL COMPLY WITH MANUFACTURER RECOMMENDATIONS.

2 GREASE INTERCEPTOR DETAIL

SCALE: N.T.S.

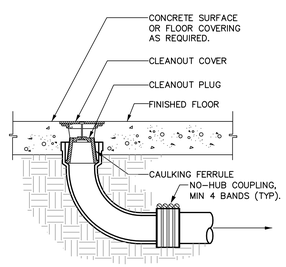

8 END OF LINE FLOOR CLEANOUT

SCALE: NONE

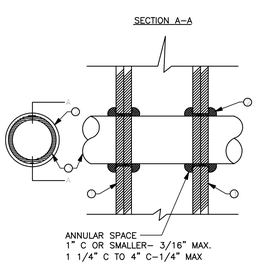

NOTES:

1. GYP BOARD, 5/8" THICK: 1HR. – 1 LAYER, 2HR. – 2 ALYERS.
2. FILL, VOID OR CAVITY MATERIAL – CAULK: CAULK FILL MATERIAL FORCED INTO ANNULAR SPACE TO MAX. EXTENT POSSIBLE AND WITH A MIN. 1/4" DIAMETER BEAD OF CAULK APPLIED TO PERIMETER OF PIPE OR CONDUIT AT ITS EGRESS FROM THE WALL. MINNESOTA MINING & MANUFACTURING CO.: TYPES SP –25 S/L, CP –25 N/S.
3. CONDUIT: NOM. 4" DIAMETER (OR SMALLER) STEEL EMT CONDUIT OR NOM. 1" DIAMETER (OR SMALLER) FLEXIBLE STEEL CONDUIT. A MAX. OF ONE PIPE OR CONDUIT IS PERMITTED IN THE FIRESTOP SYSTEM. PIPE OR CONDUIT TO BE INSTALLED NEAR CENTER OF STUD CAVITY WIDTH AND TO BE RIGIDLY SUPPORTED ON BOTH SIDES OF WALL ASSEMBLY.
4. FIRESTOP SYSTEM: INSTALLED SYMMETRICALLY ON BOTH SIDES OF WALL ASSEMBLY. THE HOURLY F RATING OF THE FIRESTOP SYSTEM IS EITHER 1 OR 2 HR. DEPENDING UPON THE HOURLY FIRE RATING OF THE WALL ASSEMBLY IN WHICH IT IS INSTALLED. THE HOURLY T RATING FOR THE FIRESTOR SYSTEM ARE DEPENDENT UPON THE SIZE OF THE CONDUIT, THE FIRESTOP CONFIGURATION AND THE HOURLY FIRE RATING OF THE WALL ASSEMBLY IN WHICH IT IS INSTALLED. THE FIRESTOP CONFIGURATION IS DEPENDENT UPON THE SIZE OF THE ANNULAR SPACE BETWEEN THE STEEL PIPE OR CONDUIT (OR PIPE COVERING) AND THE PERIMETER OF THE CIRCULAR THROUGH OPENING IN THE GYPSUM WALLBOARD LAYERS.

XHEZ SYSTEM NO. WL1001
F RATINGS – 1 AND 2 HR. (SEE NOTE 4)

5 PIPE THRU RATED WALL DETAIL

SCALE: NONE

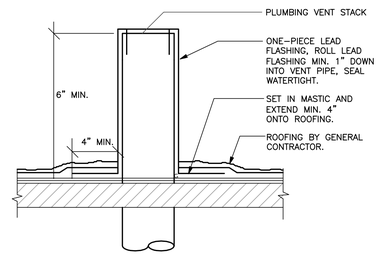

NOTE: PIPE AND FLASHING BY PLUMBING INSTALLER. ROOFING BY GENERAL CONTRACTOR.

3 VENT THRU ROOF

SCALE: NONE

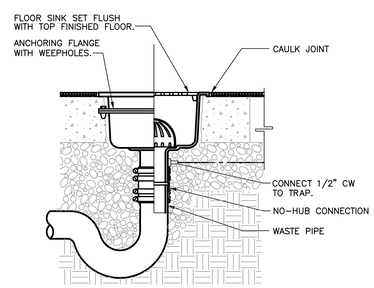

1 FLOOR SINK DETAIL

SCALE: NONE

Bayley Construction
3730 S. Susan St.
Suite 200
Santa Ana, CA. 92704
CA. License 734880
Tel 714-540-8863
Fax 714-556-8863

Bayley Construction
8005 S.E. 28th St.
P.O. Box 9004
Mercer Island, WA. 98040
WA. License BAYLEC034JC
Tel 206-621-8884
Fax 206-343-7728

BAYLEY CONSTRUCTION

Pacific Parking DESIGN
6 Venture, Suite 275 949.341.0066 t
Irvine, California 92618 949.341.0099 f

DLR Group WWCOT
Architecture Engineering Planning Interiors
4280 Latham Street, Suite H 951.682.0470 t
Riverside, California 92501 951.682.1801 f

GLUMAC
engineers for a sustainable future
18200 Von Karman Ave., Suite 100
Irvine, CA 92612
T. 949.833.8190 F. 949.833.0252
Job No.: 04.10.00861
Contact: JM/SCW/FN
www.glumac.com

REGISTERED PROFESSIONAL ENGINEER
FRANK NGUYEN
No. E20828
Exp. 9-30-12
MECHANICAL
STATE OF CALIFORNIA

Public Agency Submittal: .
Issued for Bidding: .
Issued for Construction: .

#	Revisions:
A	09.15.2011 PERMIT SET

NOT FOR CONSTRUCTION

PHASE II: FOX ENTERTAINMENT PLAZA: PARKING GARAGE

3605 Market Street,
Riverside, CA 92501

CITY of RIVERSIDE

CITY OF RIVERSIDE

3900 Main Street, Riverside, CA 92522

Phase: Plan Check
Revised .
PPD Project № 10-101

Plumbing Details

Issued Date: 05.02.2011
Drawn By: -
Checked By:

P-P401 A

Sheet №

GENERAL NOTES

1. THE PLUMBING SYSTEM DESIGN, INSTALLATION AND MATERIALS SHALL CONFORM TO THE 2010 EDITION OF THE CALIFORNIA PLUMBING CODE, APPLICABLE LOCAL CODES & ORDINANCES AND REQUIREMENTS OF AUTHORITIES HAVING JURISDICTION.
2. PLUMBING INSTALLATION SHALL COMPLY WITH AB1953 LOW LEAD REQUIREMENT.
3. REFER TO ARCHITECTURAL DRAWINGS FOR EXACT FIXTURE LOCATIONS, MOUNTING HEIGHTS AND COLOR.
4. THE CONTRACTOR SHALL BE RESPONSIBLE FOR VERIFYING CURRENT REQUIREMENTS WITH THE MANUFACTURER OF THE PRODUCTS USED ON THE PROJECT AND NOTIFY THE ARCHITECT/ENGINEER OF RECORD IF ANY DISCREPANCIES ARE FOUND BEFORE THE PURCHASE OF THE PRODUCT OR ANY WORK TO INSTALL OWNER-FURNISHED PRODUCTS.
5. VERIFY EXACT LOCATION & SIZE OF EXISTING WASTE, VENT AND WATER PIPING PRIOR TO START OF WORK. ANY DEVIATIONS FROM THE DRAWINGS OR SPECIFICATIONS SHALL BE BROUGHT TO THE ATTENTION OF THE ARCHITECT/ENGINEER PRIOR TO START OF WORK.
6. SCHEDULE ALL WORK WITH THE FACILITY INCLUDING CONSTRUCTION ACCESS AND STORAGE. THE CONSTRUCTION SCHEDULE PROCEDURE SHALL BE APPROVED BY THE FACILITY PRIOR TO START OF CONSTRUCTION.
7. CONTRACTOR SHALL PROVIDE DUST COVERS AS REQUIRED TO CONTAIN DUST AND DEBRIS WITHIN THE CONSTRUCTION AREA. BROOM CLEAN ALL AREAS EACH DAY. KEEP DIRT AND DUST TO A MINIMUM.
8. ALL REMOVED ITEMS DEEMED TO HAVE VALUE BY THE OWNER SHALL BE DELIVERED TO A PLACE OF STORAGE AT THE SITE AS DIRECTED. ALL OTHER ITEMS MUST BE DISPOSED OF OFF-SITE IN A LEGAL MANNER.
9. PROVIDE WATER HAMMER ARRESTORS FOR ALL QUICK CLOSING FAUCETS/DEVICES PER CPC SEC. 609.10. COORDINATE LOCATION AND QUANTITY OF ALL ACCESS PANELS. ACCESS PANELS ARE REQUIRED IN CEILINGS OR WALLS FOR ALL VALVES, CONTROLS, TRAP PRIMERS, WATER HAMMER ARRESTORS AND OTHER ITEMS REQUIRING MAINTENANCE, AND SHALL BE FURNISHED AND INSTALLED IN ACCORDANCE WITH ARCHITECTURAL SPECIFICATIONS.
10. ALL FLOOR DRAINS AND FLOOR SINKS SHALL BE PROVIDED WITH TRAP PRIMERS. TRAP PRIMERS SHALL BE INSTALLED PER MANUFACTURER'S RECOMMENDATIONS. PROVIDE ELECTRONIC ACTUATED PRIMERS AT LOCATIONS WHERE CONNECTION TO BRANCH PIPING SERVING AT LEAST ONE WATER CLOSET IS NOT AVAILABLE TO INSURE REQUIRED PERIODIC PRESSURE DIFFERENTIAL.
11. CONTRACTOR SHALL OBTAIN AND PAY FOR THE REQUIRED FEES, PERMITS AND INSPECTIONS.
12. ALL PIPING SHOWN ON DRAWINGS IS DIAGRAMMATIC AND SHALL NOT BE SCALED TO DETERMINE EXACT LOCATION. FOR GAS & CONDENSATE DRAIN CONNECTIONS SEE HVAC DWGS FOR EXACT LOCATIONS OF THESE CONNECTIONS.
13. ALL PIPING SHOWN ON DRAWINGS SHALL BE CONSIDERED NEW UNLESS OTHERWISE NOTED.
14. PROVIDE APPROVED FIRE STOPS AT ALL LOCATIONS WHERE PIPING PENETRATES FIRE RATED PARTITIONS OR SLAB.
15. PROVIDE WATER PROOF SEALANT AT FLOOR DRAIN AND PIPE FLOOR PENETRATIONS.
16. THESE DRAWINGS DO NOT INCLUDE ALL NECESSARY SAFETY REQUIREMENTS. CONTRACTOR TO COMPLY WITH SAFETY REQUIREMENTS SET FORTH BY THE LOCAL AUTHORITIES HAVING JURISDICTION.
17. TEST SYSTEM(S) IN ACCORDANCE WITH REQUIREMENTS OF THE GOVERNING AUTHORITIES.
18. PROVIDE CONCEALED MANUFACTURED CARRIERS/SUPPORTS FOR ALL WALL HUNG PLUMBING FIXTURES.
19. ALL PLUMBING WORK SHALL BE INSTALLED SO AS TO AVOID INTERFERENCE WITH ELECTRICAL AND MECHANICAL EQUIPMENT AND STRUCTURAL FRAMING.
20. ALL CLEANOUTS SHALL BE INSTALLED WHERE READILY ACCESSIBLE AND LOCATED AS PER CODE REQUIREMENTS. THE CONTRACTOR SHALL COORDINATE ALL CLEANOUT LOCATIONS WITH EQUIPMENT, CABINETS, ETC., AND THE ARCHITECT PRIOR TO ANY INSTALLATION.
21. ALL VALVES, UNIONS, ETC. TO BE SAME SIZE AS LINE SIZE UNLESS OTHERWISE INDICATED ON DRAWINGS.
22. BEFORE FABRICATION OR INSTALLATION, THE CONTRACTOR SHALL VERIFY EXACT LOCATIONS OF ALL MECHANICAL EQUIPMENT AND EQUIPMENT PROVIDED UNDER ANOTHER SECTION OF SPECIFICATIONS. EXACT ROUGH-IN LOCATIONS AND REQUIREMENTS SHALL BE COORDINATED IN FIELD.
23. IF SOILS REPORT INDICATES THAT LOCAL SOIL IS CORROSIVE, ALL UNDERGROUND PIPE AND FITTINGS SHALL BE PROTECTED IN ACCORDANCE WITH THE RECOMMENDATIONS OF THE SOILS REPORT ENGINEER.
24. ALL PLUMBING PENETRATIONS THRU THE SLAB OR STRUCTURAL MEMBERS SHALL BE CAREFULLY COORDINATED WITH THE STRUCTURAL ENGINEER PRIOR TO CONSTRUCTION.
25. ALL HORIZONTAL PIPING LINES EXTENDED AND CONNECTED TO EQUIPMENT SHALL BE RUN AT THE HIGHEST POSSIBLE ELEVATIONS.
26. THESE DRAWINGS SHALL BE READ IN CONJUNCTION WITH AND BE CONSIDERED TO BE A PART OF SEPARATE AND COMPLETE MECHANICAL SPECIFICATION.
27. THE CONTRACTOR SHALL BE RESPONSIBLE FOR PATCHING AND REPAIRING ALL AREAS WHICH ARE EXCAVATED AND/OR DAMAGED BY THEIR OPERATIONS. IN ADDITION, THE CONTRACTOR SHALL RESTORE TO THEIR ORIGINAL CONDITION ALL AREAS DAMAGED BY HIS OPERATIONS.
28. ALL CUTTING OF EXISTING PAVING, WALKS AND/OR FLOORS SHALL BE BY MACHINE SAW CUTTING. HOLES FOR PIPES IN CONCRETE WALLS OR FLOORS SHALL BE DONE USING CORE DRILLING EQUIPMENT.
29. ALL PIPING SHALL BE SUPPORTED SO AS NOT TO CONTACT ANY PORTION OF THE SUSPENDED CEILING SYSTEMS OR STUDS/GYPSUM BOARD/NOISE CONTROL ELEMENTS OF THE OVERALL STRUCTURE. TRAPEZES OR OTHER DEVICES SHALL BE USED WHERE PIPING INTERFACES WITH THE NORMAL SPACING OF HANGER WIRES FOR CEILING SYSTEMS.
30. ALL SANITARY & STORM DRAIN PIPING SHALL BE SLOPED AT 1/4 INCH PER FOOT UNLESS OTHERWISE INDICATED.
31. DISINFECTION & FLUSHING OF POTABLE WATER PIPING SHALL BE DONE IN ACCORDANCE WITH CPC SEC. 609.9

ABBREVIATIONS

A	AIR	IN	INCH OR INCHES
ABV	ABOVE	INV	INVERT
A/C	AIR CONDITIONING	KW	KILOWATT
AFF	ABOVE FINISHED FLOOR	MAX	MAXIMUM
AP	ACCESS PANEL	MBH	THOUSAND BTU PER HOUR
ARCH	ARCHITECTURAL	MC	MECHANICAL CONTRACTOR
BEL	BELOW	MECH	MECHANICAL
BEY	BEYOND	MFR	MANUFACTURER
BLDG	BUILDING	MTD	MOUNTED
BOP	BOTTOM OF PIPE	(N)	NEW
BTM	BOTTOM	N/A	NOT APPLICABLE
BV	BALL VALVE	NIC	NOT IN CONTRACT
CD	CONDENSATE DRAIN	OD	OVERFLOW DRAIN
CFH	CUBIC FEET PER HOUR	O_2	OXYGEN
CLG	CEILING	PC	PLUMBING CONTRACTOR
CONN	CONNECTION OR CONNECT	PLBG	PLUMBING
COTG	CLEANOUT-TO-GRADE	POC	POINT OF CONNECTION
CW	COLD WATER	PRV	PRESSURE RELIEF VALVE
ø	DIAMETER	PSI	POUNDS PER SQUARE INCH
DB	DRY BULB	REQ'D	REQUIRED
DTL	DETAIL	RIO	ROUGHING IN ONLY
DIA	DIAMETER	SD	STORM DRAIN
DN	DOWN	SHT	SHEET
DWG	DRAWING	SOV	SHUT-OFF VALVE
FLR	FLOOR	SS	SANITARY SEWER
GC	GENERAL CONTRACTOR	(TYP.)	TYPICAL
GPM	GALLONS PER MINUTE	V	VENT
GV	GAS VENT	VAC	VACUUM
		VTR	VENT THRU ROOF
HDR	HEADER	W	WASTE = SANITARY SEWER
HW	HOT WATER	WCO	WALL CLEANOUT
HWR	HOT WATER RETURN	W/	WITH
		WHA	WATER HAMMER ARRESTER

PIPING MATERIALS

1.	SANITARY WASTE AND VENT PIPING BELOW GRADE:	SERVICE WEIGHT NO-HUB CAST IRON WITH 4 OR 6 BAND STAINLESS STEEL COUPLINGS. PIPE WRAP ALL UNDERGROUND PIPING.
2.	SANITARY WASTE AND VENT PIPING ABOVE GRADE:	SERVICE WEIGHT CAST IRON WITH STAINLESS STEEL COUPLINGS.
3.	WATER PIPING BELOW GROUND:	TYPE 'K' COPPER WITH LEAD FREE SOLDER JOINTS.
4.	WATER PIPING ABOVE GROUND:	TYPE 'L' COPPER WITH LEAD FREE SOLDER JOINTS.
5.	CONDENSATE DRAIN PIPING:	TYPE 'M' COPPER WITH DWV FITTINGS.
6.	INSULATION OF DOMESTIC HOT WATER SUPPLY AND CONDENSATE DRAIN PIPING:	GLASS FIBER PIPE INSULATION WITH FACTORY APPLIED WHITE JACKET, J-M MICRO-LOK 750AP, 1 INCH THICK FOR PIPE SIZES 1 INCH AND SMALLER. 1 1/2 INCHES THICK FOR PIPE SIZES 1 1/4 INCHES AND LARGER.
7.	GAS PIPING ABOVE GRADE:	SCHEDULE 40 BLACK STEEL PIPE WITH BLACK MALLEABLE SCREW FITTINGS.

PLUMBING DRAWING LIST

P-P000	PLUMBING LEAD SHEET & DETAILS
P-P001	PLUMBING SITE PLAN
P-P201	PLUMBING PARKING GARAGE LEVEL P-1
P-P202	PLUMBING PARKING GARAGE LEVEL P-2
P-P203	PLUMBING PARKING GARAGE LEVEL P-3
P-P204	PLUMBING PARKING GARAGE LEVEL P-4
P-P301	PLUMBING STORM DRAIN RISER DIAGRAM
P-P401	PLUMBING DETAILS

PLUMBING FIXTURES SCHEDULE

ITEM	DESCRIPTION	TRAP ARM	WASTE	VENT	CW	HW	REMARKS
WC-1	WATER CLOSET ACCESSIBLE - 1.28 GPF BATT OP SENSOR FV (PUBLIC)	INT	4"	2"	1"	---	AMERICAN STANDARD #3351.528 'AFWALL FLOWISE ELONGATED' TOILET, WALL HUNG, VITREOUS CHINA, SIPHON JET FLUSH ACTION BOWL, 1-1/2" TOP SPUD WITH CONDENSATE CHANNEL, WITH SELECTRONIC ELECTRONIC BATTERY OPERATED SENSOR FLUSH VALVE, C.P. 1.28 GPF. AMERICAN STANDARD #5901.100 TOILET SEAT, HEAVY DUTY SOLID PLASTIC POLYPROPYLENE OPEN FRONT LESS COVER, WITH REINFORCED STAINLESS STEEL CHECK HINGE, POSTS, WASHERS AND NUTS. WITH MIFAB HORIZONTAL/VERTICAL ADJUSTABLE CARRIER MODEL MC-10/12/13 AS APPLICABLE. INSTALLATION SHALL COMPLY WITH ADA REQUIREMENTS.
L-1	LAVATORY (COUNTERTOP - ACCESSIBLE) MANUAL METERED FAUCET 0.5 GPM FLOWRATE 0.2 GAL PER USE PUBLIC	1¼"	2"	2"	½"	½"	AMERICAN STANDARD NO. 0475.047 "AQUALYN COUNTERTOP LAVATORY", 20"x17", SELF-RIMMING, FAUCET LEDGE, VITREOUS CHINA, COMPLETE WITH CHICAGO NO. 3400-4-E280SABCP, 4" CENTERS SINGLE HOLE, PUSH-BUTTON FAUCET, SUPPLY TEMPERED WATER (105°F) TO FAUCET WITH MIXING TEE BELOW LAV. WITH McGUIRE NO. 155A 1-1/4" OUTLET "OPEN GRID P.O. PLUG", McGUIRE NO. PW8090NCO 1-1/4" L.A. PATTERN P-TRAP WITH GALVANIZED NIPPLE AND CHROMIUM PLATED BRASS CASING, WITH CHICAGO NO. 1017-CP LOOSE KEY STOPS WITH RIGID SUPPLIES. COMPLY WITH ADA REQUIREMENTS.
SH-1	SHOWER 1.5 GPM	2"	2"	2"	¾"	¾"	SYMMONS NO. C-96-1-295-X "TEMPTROL SHOWER SYSTEM", COMPLETE WITH PRESSURE BALANCING MIXING VALVE WITH LEVER HANDLE, INTEGRAL STOPS, #4-295-B 2.5 GPM ALL BRASS ADJUSTABLE SPRAY, NOZZLE-TYPE HEAD WITH BACK PLATE. WITH INTEGRAL CHECK STOPS AND 1.5 GPM FLOW RESTRICTOR.
WHA-1	WATER HAMMER ARRESTOR	---	---	---	---	---	ZURN Z-1700 SERIES "SHOKTROL" WATER HAMMER ARRESTOR COMPLETE BEHIND ACCESS PANEL. INSTALL PER MANUFACTURER'S RECOMMENDATION.
AD-1	ROOF DECK/AREA DRAIN	SEE PLANS FOR SIZES					JR SMITH PROMENADE DRAIN MODEL #1409 CAST IRON BODY, COMPLETE WITH ADJUSTABLE EXTENSION SLEEVE, FLASHING COLLAR, NICKEL BRONZE 14"x14" GRATE, SUMP RECEIVER & UNDERDECK CLAMP.
ED-1	EMERGENCY DRAIN (LEVELS 2 THRU 4)	SEE PLANS FOR SIZES					JR SMITH EMERGENCY DRAIN MODEL #2110Y-B-M CAST IRON BODY, COMPLETE WITH FLASHING COLLAR, 8" DIA. DUCTILE IRON GRATE & SEDIMENT BUCKET.
ED-2	EMERGENCY DRAIN WITH FILTER (LEVEL 1)	SEE PLANS FOR SIZES					WATTS FD-410 PARKING AREA CATCH BASIN WITH FLT-116 (STORMWATER POLLUTION CONTROL FILTER) PIG DRAIN INSERT PLUS. INSTALL PER MFR INSTRUCTIONS.
TD-1	TRENCH DRAIN W/FILTER INSERT (LEVEL 1 GARAGE ENTRANCE)	SEE PLANS FOR SIZES					ZURN Z886-HDD-8601-U4 WITH NO HUB-BOTTOM OUTLET AND DUCTILE IRON GRATES. WITH KRISTAR TRENCH DRAIN FILTER INSERT MODEL #FG-TDOF4 WITH CENTER BOTTOM OUTLET.
TD-2	TRENCH DRAIN (LEVEL 1 SERVICE AREA)	2"	2"	2"	½"	---	WATTS FS-900 12"x24" FLOOR RECEPTOR WITH FLANGE, NICKEL BRONZE GRATE AND BOTTOM STRAINER. PROVIDE TRAP PRIMER CONNECTION. INSTALL FLUSH WITH FLOOR.
TP-1	TRAP PRIMER (LEVEL 1 SERVICE AREA)	---	---	---	½"	---	PPP BATTERY OPERATED TRAP PRIMER MODEL NO. MPB-500-12V. INSTALL PER MANUFACTURER'S RECOMMENDATION.
TP-2	TRAP PRIMER (PARKING ATTENDANT RESTROOM)	---	---	---	½"	---	PPP BATTERY OPERATED TRAP PRIMER MODEL NO. MPB-500-12V. INSTALL PER MANUFACTURER'S RECOMMENDATION.
FD-1	FLOOR DRAIN (LEVEL 1 UTILITY ROOM)	2"	2"	2"	---	---	ZURN MODEL No. ZN415-P FLOOR DRAIN. DURA COATED CAST IRON BODY W/ 2" NO-HUB BOTTOM OUTLET. COMPLETE W/ Z400E CHROME-PLATED NICKEL BRONZE STRAINER WITH FUNNEL DRAIN & ½" TRAP PRIMER CONNECTION WITH MEMBRANE CLAMP.
FS-1	FLOOR SINK (LEVEL 1 UTILITY ROOM AREA)	2"	2"	2"	---	---	ZURN MODEL No. ZN1910-NH-P-16 FLOOR SINK. CAST IRON BODY W/ PORCELAIN ENAMEL INTERIOR AND TOP. COMPLETE W/ ANTI-SPLASH DOME STRAINER, ½" TRAP PRIMER CONNECTION, & ⅜" HEEL-PROOF GRATE WITH MEMBRANE CLAMP.

EQUIPMENT SCHEDULE

ITEM	SERVICE	DESCRIPTION
GI-1	GREASE INTERCEPTOR	2,500 GALLON JENSEN PRECAST CONCRETE GREASE INTERCEPTOR WITH 4 - 24" CLEAR ACCESS MANHOLES WITH TRAFFIC RATER FRAMES AND COVERS. PROVIDE WITH EXTENSIONS FOR FLUSH WITH FLOOR INSTALLATION AND VENT. PROVIDE SAMPLING BOX DOWNSTREAM OF INTERCEPTOR. (NOTE: 2,500 GALLON GREASE INTERCEPTOR PROVIDES 307 DRAINAGE FIXTURE UNITS (DFUs) PER CPC TABLE 10-3)
FG-1	DOWNSPOUT FILTER	FLOGARD DOWNSPOUT FILTER MODEL FG-DS4 THUR FG-DS8 CONSTRUCTED FROM 304 STAINLESS STEEL. FILTER MEDIUM SHALL BE FOSSIL ROCK INSTALED AND MAINTAINED IN ACCORDANCE WITH MANUFACTURER RECOMMENDATIONS.

COLD WATER BOOSTER PUMP SCHEDULE

ITEM	SERVICE	MFR AND MODEL	TYPE	CAPACITY GPM	CAPACITY HEAD (FT)	HP	RPM	V	PH	WT	REMARKS
BP-1 (LOCATED IN PARKING GARAGE)	COLD WATER BOOSTER PUMP (ALSO SERVES BB/EH)	WEIL AQUA/SYNCRO FLO MODEL No. 22OK03XXX -3H-2A-SWF44-1 NSF	DUPLEX, VARIABLE SPEED	66 EACH PUMP	70	3 EACH PUMP	3450	480	3	950	PRE-PACKAGED, SKID MOUNTED, VARIABLE SPEED END SUCTION CENTRIFUGAL PUMPS, ANSI/NSF STD #61 ANNEX G, CALIFORNIA AB1953 COMPLIANT, U.L. CERTIFIED AND TESTED CONTROL PANEL, ASME APPROVED 53 GAL. HYDRO-PNEUMATIC TANK LOCATED ON BB/EH ROOF. OPERATING WT. OF TANK = 652 LBS

PARKING GARAGE/BLACKBOX EXHIBIT HALL HYDRAULIC CALCS

TOTAL DOMESTIC WTR DEMAND (327 FU) = 115 GPM
PRESSURE AVAILABLE: (MIN.=54.0 PSI MAX.=66.0 PSI) = 54.0 PSI
PRESSURE LOSS THRU 3" WTR MTR @ 115 GPM FLOW = -2.0 PSI
PRESSURE LOSS THRU 3" RPBFP @ 115 GPM FLOW = -12.0 PSI

PRESSURE AVAILABLE DOWNSTREAM OF RPBFP = 40.0 PSI

LONGEST PIPE RUN (INCL 20% FTTG LOSS) = 415'
PRESS. LOSS DUE TO STATIC HEIGHT (30.5'/2.31) = -13.20 PSI
PRESS. REQD AT FURTHEST WC = -25.0 PSI
BOOSTER PUMP PRESSURE ADDITION = 25.0 PSI
PRESSURE AVAIL FOR PIPE FRICTION LOSS = 26.80 PSI

MAX. PRESSURE AVAIL FOR 100' PIPE FRICTION LOSS = (26.80/415')x100 = 6.45 PSI
PIPING SIZED ON 5.0 PSI/100'
(MAX PIPE VELOCITY FOR: CW PIPING=8.0 FPS, HW PIPING=5.0 FPS)

PIPE SIZING SCHEDULE (BASED ON 5.0PSI/100' PIPE FRICTION LOSS)

SIZE	COLD WATER GPM	COLD WATER F.V.	COLD WATER F.T.	COLD WATER VEL. (FPS)	HOT WATER GPM	HOT WATER F.T.	HOT WATER VEL. (FPS)
1/2"	3	0	3	3.5	3	3	3.5
3/4"	7	0	8	4.0	7	8	4.0
1"	13	0	18	5.0	13	18	5.0
1-1/4"	28	11	49	6.0	22	34	5.0
1-1/2"	38	25	78	6.0	30	54	5.0
2"	75	128	249	8.0	50	127	5.0
2-1/2"	105	270	406	8.0	70	225	5.0
3"	180	775	809	8.0			

PLUMBING LEGEND

SYMBOL	DESCRIPTION
	BALL VALVE
	UNION
	CAP OR PLUG
	BLIND FLANGE
	CONCENTRIC REDUCER
	ECCENTRIC REDUCER
	AQUASTAT
WHA	WATER HAMMER
PG	PRESSURE GAUGE WITH COCK
T	THERMOMETER
CO	CLEANOUT PLUG
FCO	FLOOR CLEANOUT
YCO	YARD CLEANOUT
TT	TEST TEE
WH	WALL HYDRANT
HB	HOSE BIBB
YH	YARD HYDRANT
FD	FLOOR DRAIN
FS	FLOOR SINK
	HUB DRAIN
	DIRECTION OF SLOPE
	DIRECTION OF FLOW
	PIPE UP
	PIPE DOWN
	PIPE DROP
	TOP CONNECTION - BRANCH LINE
	BOTTOM CONNECTION - BRANCH LINE
	COLD WATER
	HOT WATER (120°F)
SAN	SANITARY SEWER
	PIPING BELOW GRADE
	WASTE
	VENT
PD	PUMPED DRAIN (WASTE)
OCD	OVERFLOW CONDENSATE DRAIN
PCD	PUMPED CONDENSATE DRAIN

BAYLEY CONSTRUCTION

Bayley Construction
3730 S. Susan St.
Suite 200
Santa Ana, CA, 92704
CA. License 734880
Tel 714-540-8863
Fax 714-556-8863

Bayley Construction
8005 S.E. 28th St.
P.O. Box 9004
Mercer Island, WA. 98040
WA. License BAYLEC034JC
Tel 206-621-8884
Fax 206-343-7728

Pacific Parking DESIGN
6 Venture, Suite 275 949.341.0066 t
Irvine, California 92618 949.341.0099 f

DLR Group WWCOT
Architecture Engineering Planning Interiors
4280 Latham Street, Suite H 951.682.0470 t
Riverside, California 92501 951.682.1801 f

GLUMAC
engineers for a sustainable future™
18200 Von Karman Ave., Suite 100
Irvine, CA 92612
T. 949.833.8180 F. 949.833.0252
Job No.: 04.10.08861
Contact: JM/SCW/FN
www.glumac.com

REGISTERED PROFESSIONAL ENGINEER RICHARD HOLZER No. 22941 Exp. 9-30-12 MECHANICAL STATE OF CALIFORNIA

Public Agency Submittal:
Issued for Bidding:
Issued for Construction:

Revisions:
A 09.15.2011 PERMIT SET

NOT FOR CONSTRUCTION

PHASE II:
FOX ENTERTAINMENT PLAZA:
PARKING GARAGE

3605 Market Street,
Riverside, CA 92501

CITY of RIVERSIDE

CITY OF RIVERSIDE

3900 Main Street, Riverside, CA 92522

Phase: Plan Check
Revised -
PPD Project № 10-101

Plumbing Lead Sheet and Details

Issued Date: 05.02.2011
Drawn By: -
Checked By: -

P- P000

Sheet №

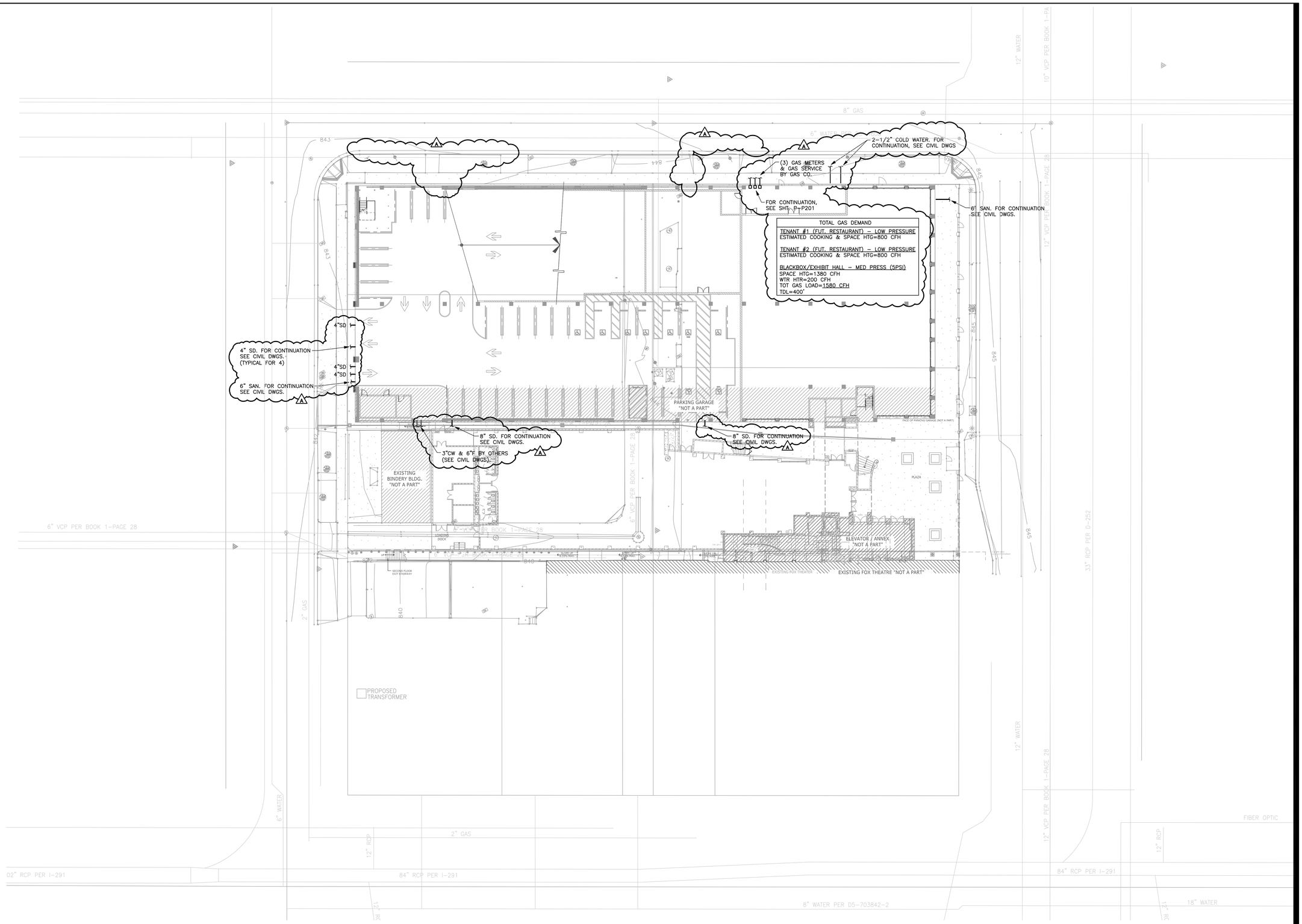

PROJECT NORTH

0' 10' 20' 40' 80'

PLUMBING SITE PLAN

Scale 1" = 20'-0"

1

Bayley Construction
3730 S. Susan St.
Suite 200
Santa Ana, CA, 92704
CA. License 734880
Tel 714-540-8863
Fax 714-556-8863

Bayley Construction
8005 S.E. 28th St.
P.O. Box 9004
Mercer Island, WA. 98040
WA. License BAYLEC034JC
Tel 206-621-8884
Fax 206-343-7728

BAYLEY CONSTRUCTION

Pacific Parking DESIGN
6 Venture, Suite 275 949.341.0066 t
Irvine, California 92618 949.341.0099 f

DLR Group WWCOT
Architecture Engineering Planning Interiors
4280 Latham Street, Suite H 951.682.0470 t
Riverside, California 92501 951.682.1801 f

GLUMAC
engineers for a sustainable future
18200 Von Karman Ave., Suite 100
Irvine, CA 92612
T. 949.833.8180 F. 949.833.0252
Job No.: 04.10.00861
Contact: JM/SCW/FN
www.glumac.com

REGISTERED PROFESSIONAL ENGINEER
RICHARD HOLZER
No. 22941
Exp. 9-30-12
MECHANICAL
STATE OF CALIFORNIA

Public Agency Submittal: .
Issued for Bidding: .
Issued for Construction: .

Revisions:

A 09.15.2011 PERMIT SET

NOT FOR CONSTRUCTION

PHASE II: FOX ENTERTAINMENT PLAZA: PARKING GARAGE

3605 Market Street,
Riverside, CA 92501

CITY of RIVERSIDE

CITY OF RIVERSIDE

3900 Main Street, Riverside, CA 92522

Phase: Plan Check
Revised .
PPD Project № 10-101

Plumbing Site Plan

Issued Date: 05.02.2011
Drawn By: -
Checked By: -

P- P100

Sheet №

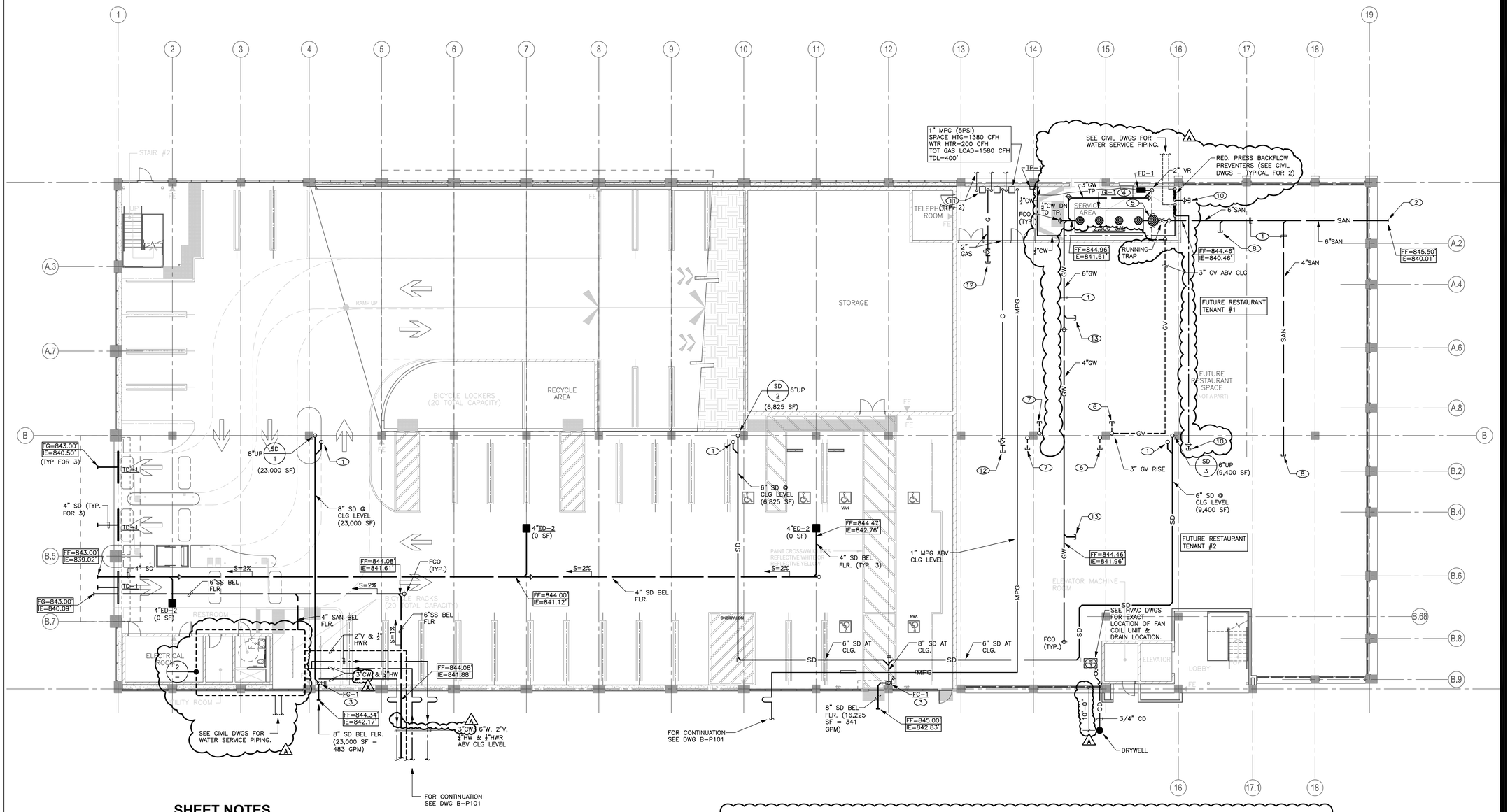

SHEET NOTES

1. 4" SD UP TO ED-1 ABOVE.
2. FOR CONTINUATION, SEE CIVIL DWGS.
3. FLOGARD DOWNSPOUT FILTER.
4. 2500 GAL GREASE INTERCEPTOR.
5. SAMPLE BOX.
6. CAP 3" GV ABV CLG FOR FUTURE TENANT.
7. CAP 3" SAN VENT ABV CLG FOR FUTURE TENANT.
8. CAP 4" SAN WASTE BEL FLR FOR FUTURE TENANT.
9. 2-1/2" CW BEL FLR.
10. CAP 2-1/2" CW ABV CLG FOR FUTURE TENANT.
11. GAS METER & SERVICE BY GAS CO.
12. CAP 2" GAS (800 CFH) ABV CLG FOR FUTURE TENANT.
13. CAP 4" GW BEL FLR FOR FUTURE TENANT.

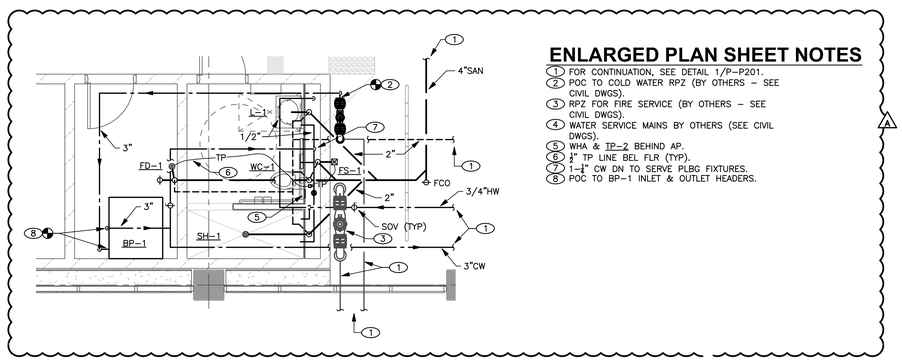

ENLARGED PLAN SHEET NOTES

1. FOR CONTINUATION, SEE DETAIL 1/P-P201.
2. POC TO COLD WATER RPZ (BY OTHERS – SEE CIVIL DWGS).
3. RPZ FOR FIRE SERVICE (BY OTHERS – SEE CIVIL DWGS).
4. WATER SERVICE MAINS BY OTHERS (SEE CIVIL DWGS).
5. WHA & TP-2 BEHIND AP.
6. 3/4" TP LINE BEL FLR (TYP).
7. 1-1/4" CW DN TO SERVE PLBG FIXTURES.
8. POC TO BP-1 INLET & OUTLET HEADERS.

1 ENLARGED PLUMBING PLAN

SCALE: 1/4"=1'-0"

NORTH

Scale 3/32"= 1'-0"

PLUMBING PARKING GARAGE LEVEL P-1

Bayley Construction
3730 S. Susan St.
Suite 200
Santa Ana, CA, 92704
CA. License 734880
Tel 714-540-8863
Fax 714-556-8863

Bayley Construction
8005 S.E. 28th St.
P.O. Box 9004
Mercer Island, WA. 98040
WA. License BAYLEC034JC
Tel 206-621-8884
Fax 206-343-7728

Pacific Parking DESIGN
6 Venture, Suite 275 949.341.0066 t
Irvine, California 92618 949.341.0099 f

DLR Group WWCOT
Architecture Engineering Planning Interiors
4280 Latham Street, Suite H 951.682.0470 t
Riverside, California 92501 951.682.1801 f

GLUMAC
engineers for a sustainable future
18200 Von Karman Ave., Suite 100
Irvine, CA 92612
T. 949.833.8180 F. 949.833.0252
Job No.: 04.10.00861
Contact: JM/SCW/FN
www.glumac.com

REGISTERED PROFESSIONAL ENGINEER
R. EDWARD HOLZER
No. 22941
Exp. 9-30-12
MECHANICAL
STATE OF CALIFORNIA

Public Agency Submittal:
Issued for Bidding:
Issued for Construction:

#	Revisions:
A	09.15.2011 PERMIT SET

NOT FOR CONSTRUCTION

PHASE II: FOX ENTERTAINMENT PLAZA: PARKING GARAGE

3605 Market Street,
Riverside, CA 92501

CITY of RIVERSIDE

CITY OF RIVERSIDE

3900 Main Street, Riverside, CA 92522

Phase: Plan Check
Revised .
PPD Project № 10-101

Plumbing
Parking Garage
Level P-1

Issued Date: 05.02.2011
Drawn By: -
Checked By: -

P- P201

Sheet №

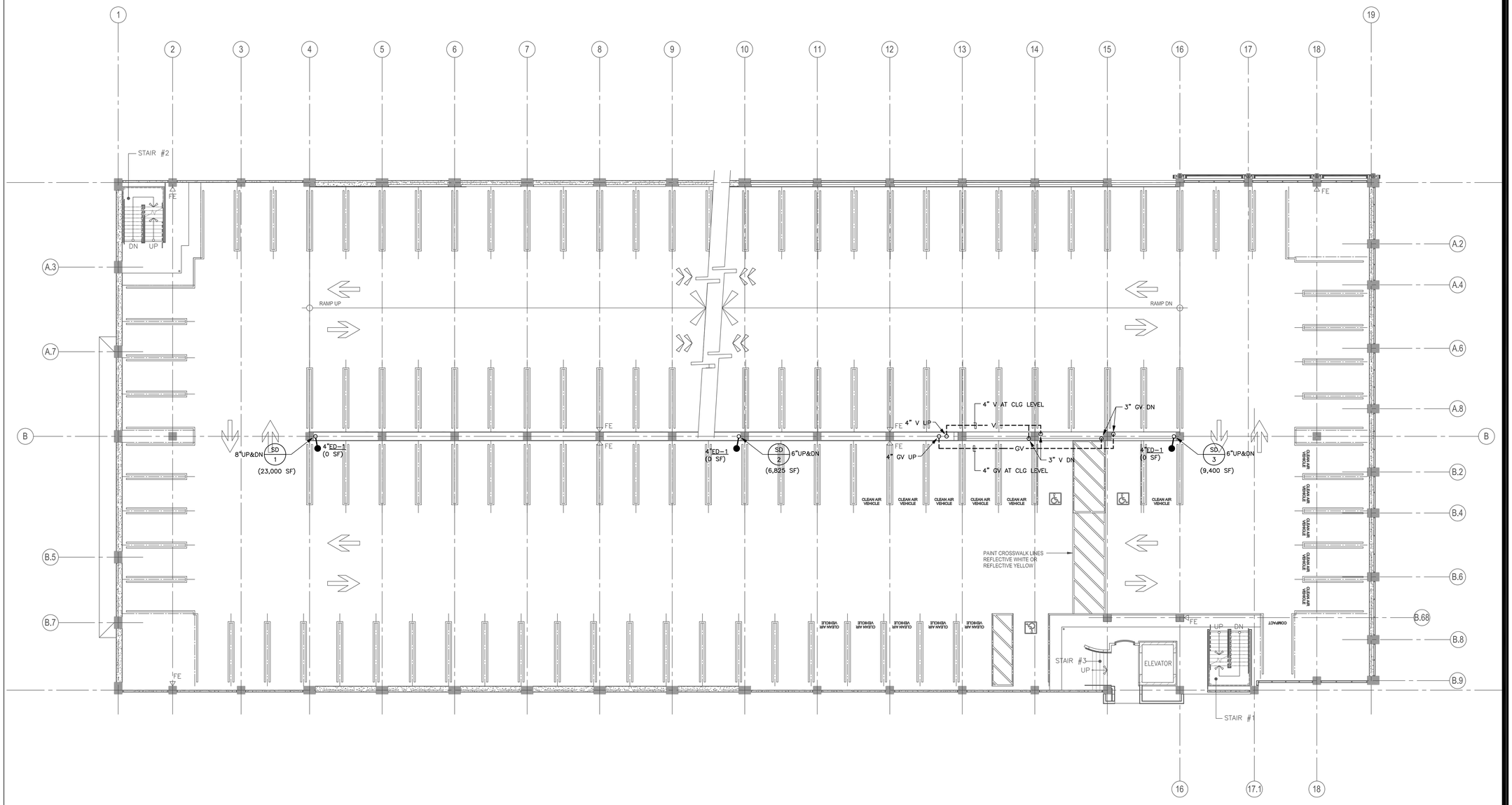

PLUMBING PARKING GARAGE LEVEL P-2

Scale 3/32"= 1'-0"

1

Bayley Construction
3730 S. Susan St.
Suite 200
Santa Ana, CA, 92704
CA. License 734880
Tel 714-540-8863
Fax 714-556-8863

Bayley Construction
8005 S.E. 28th St.
P.O. Box 9004
Mercer Island, WA. 98040
WA. License BAYLEC034JC
Tel 206-621-8884
Fax 206-343-7728

Pacific Parking DESIGN
6 Venture, Suite 275 949.341.0066 t
Irvine, California 92618 949.341.0099 f

DLR Group WWCOT
Architecture Engineering Planning Interiors
4280 Latham Street, Suite H 951.682.0470 t
Riverside, California 92501 951.682.1801 f

GLUMAC
engineers for a sustainable future
18200 Von Karman Ave., Suite 100
Irvine, CA 92612
T. 949.833.8190 F. 949.833.0252
Job No.: 04.10.00861
Contact: JM/SCW/FN
www.glumac.com

REGISTERED PROFESSIONAL ENGINEER
RICHARD HOLZER
No. 22941
Exp. 9-30-12
MECHANICAL
STATE OF CALIFORNIA

Public Agency Submittal: .
Issued for Bidding: .
Issued for Construction: .

Revisions:

A 09.15.2011 PERMIT SET

NOT FOR CONSTRUCTION

PHASE II: FOX ENTERTAINMENT PLAZA: PARKING GARAGE

3605 Market Street,
Riverside, CA 92501

CITY of RIVERSIDE

CITY OF RIVERSIDE

3900 Main Street, Riverside, CA 92522

Phase: Plan Check
Revised .
PPD Project № 10-101

Plumbing
Parking Garage
Level P-2

Issued Date: 05.02.2011
Drawn By: -
Checked By: -

P- P202

Sheet №

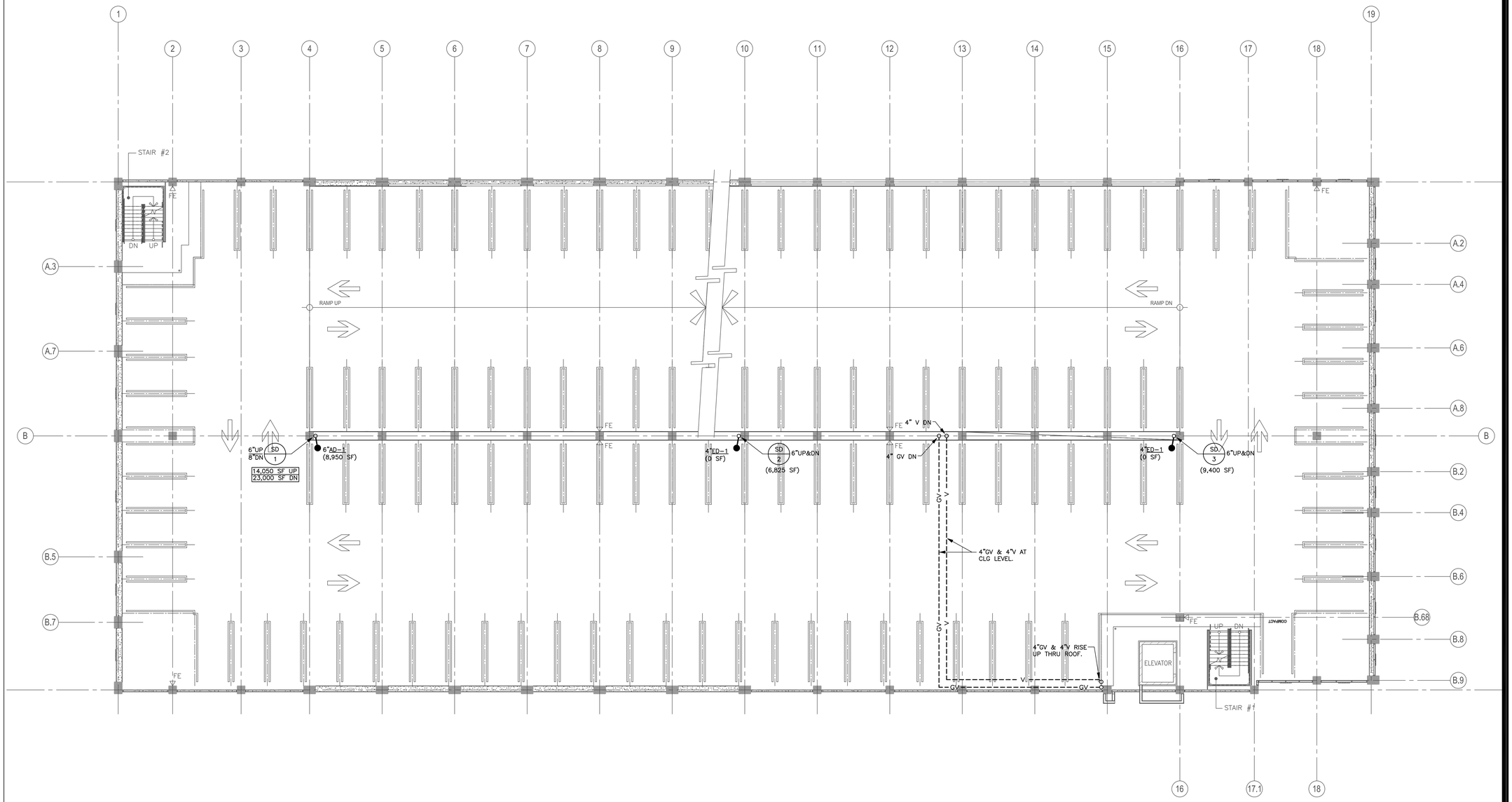

PLUMBING PARKING GARAGE LEVEL P-3

Scale
3/32"= 1'-0"

1

NORTH

Bayley Construction
3730 S. Susan St.
Suite 200
Santa Ana, CA, 92704
CA. License 734880
Tel 714-540-8863
Fax 714-556-8863

Bayley Construction
8005 S.E. 28th St.
P.O. Box 9004
Mercer Island, WA. 98040
WA. License BAYLEC034JC
Tel 206-621-8884
Fax 206-343-7728

BAYLEY CONSTRUCTION

Pacific Parking DESIGN
6 Venture, Suite 275 949.341.0066 t
Irvine, California 92618 949.341.0099 f

DLR Group WWCOT
Architecture Engineering Planning Interiors
4280 Latham Street, Suite H 951.682.0470 t
Riverside, California 92501 951.682.1801 f

GLUMAC
engineers for a sustainable future
18200 Von Karman Ave., Suite 100
Irvine, CA 92612
T. 949.833.8190 F. 949.833.0252
Job No.: 04.10.00861
Contact: JM/SCW/FN
www.glumac.com

REGISTERED PROFESSIONAL ENGINEER
RICHARD HOLZER
No. 22941
Exp. 9-30-12
MECHANICAL
STATE OF CALIFORNIA

Public Agency Submittal: .
Issued for Bidding: .
Issued for Construction: .

Revisions:

#		
A	09.15.2011	PERMIT SET

NOT FOR CONSTRUCTION

PHASE II: FOX ENTERTAINMENT PLAZA: PARKING GARAGE

3605 Market Street,
Riverside, CA 92501

CITY of RIVERSIDE

CITY OF RIVERSIDE

3900 Main Street, Riverside, CA 92522

Phase: Plan Check
Revised .
PPD Project № 10-101

Plumbing
Parking Garage
Level P-3

Issued Date: 05.02.2011
Drawn By: -
Checked By: -

P- P203

Sheet №

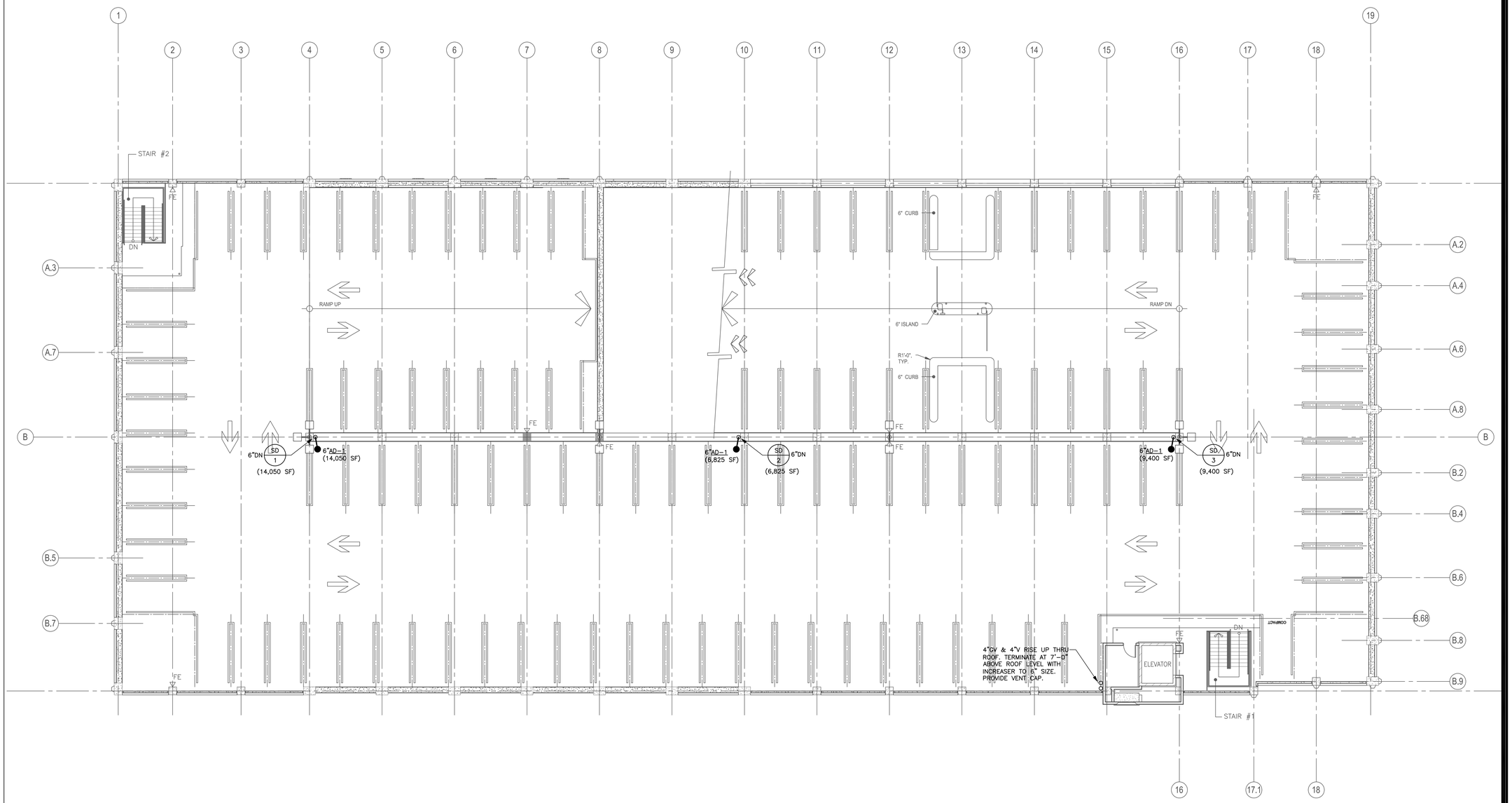

PLUMBING PARKING GARAGE LEVEL P-4

Scale 3/32"= 1'-0"

1

NORTH

Bayley Construction
3730 S. Susan St.
Suite 200
Santa Ana, CA, 92704
CA. License 734880
Tel 714-540-8863
Fax 714-556-8863

Bayley Construction
8005 S.E. 28th St.
P.O. Box 9004
Mercer Island, WA. 98040
WA. License BAYLEC034JC
Tel 206-621-8884
Fax 206-343-7728

Pacific Parking DESIGN
6 Venture, Suite 275 949.341.0066 t
Irvine, California 92618 949.341.0099 f

DLR Group WWCOT
Architecture Engineering Planning Interiors
4280 Latham Street, Suite H 951.682.0470 t
Riverside, California 92501 951.682.1801 f

GLUMAC
engineers for a sustainable future
18200 Von Karman Ave., Suite 100
Irvine, CA 92612
T. 949.833.8190 F. 949.833.0252
Job No.: 04.10.00861
Contact: JM/SCW/FN
www.glumac.com

REGISTERED PROFESSIONAL ENGINEER
RICHARD HOLZER
No. 22941
Exp. 9-30-12
MECHANICAL
STATE OF CALIFORNIA

Public Agency Submittal: .
Issued for Bidding: .
Issued for Construction: .

#	Revisions:
A	09.15.2011 PERMIT SET

NOT FOR CONSTRUCTION

PHASE II: FOX ENTERTAINMENT PLAZA: PARKING GARAGE

3605 Market Street,
Riverside, CA 92501

CITY of RIVERSIDE

CITY OF RIVERSIDE

3900 Main Street, Riverside, CA 92522

Phase: Plan Check
Revised -
PPD Project № 10-101

Plumbing
Parking Garage
Level P-4

Issued Date: 05.02.2011
Drawn By: -
Checked By: -

P- P204

Sheet №

NOTES

1. STORM DRAIN SYSTEM SIZING IS BASED ON RAINFALL RATE OF 2"/HR IN CITY OF RIVERSIDE, CA.
2. PIPING LAYOUT IS DIAGRAMMATIC AND MAY NOT SHOW ALL THE OFFSETS & PIPE FITTINGS NECESSARY FOR A COMPLETE FUNCTIONAL SYSTEM.

A

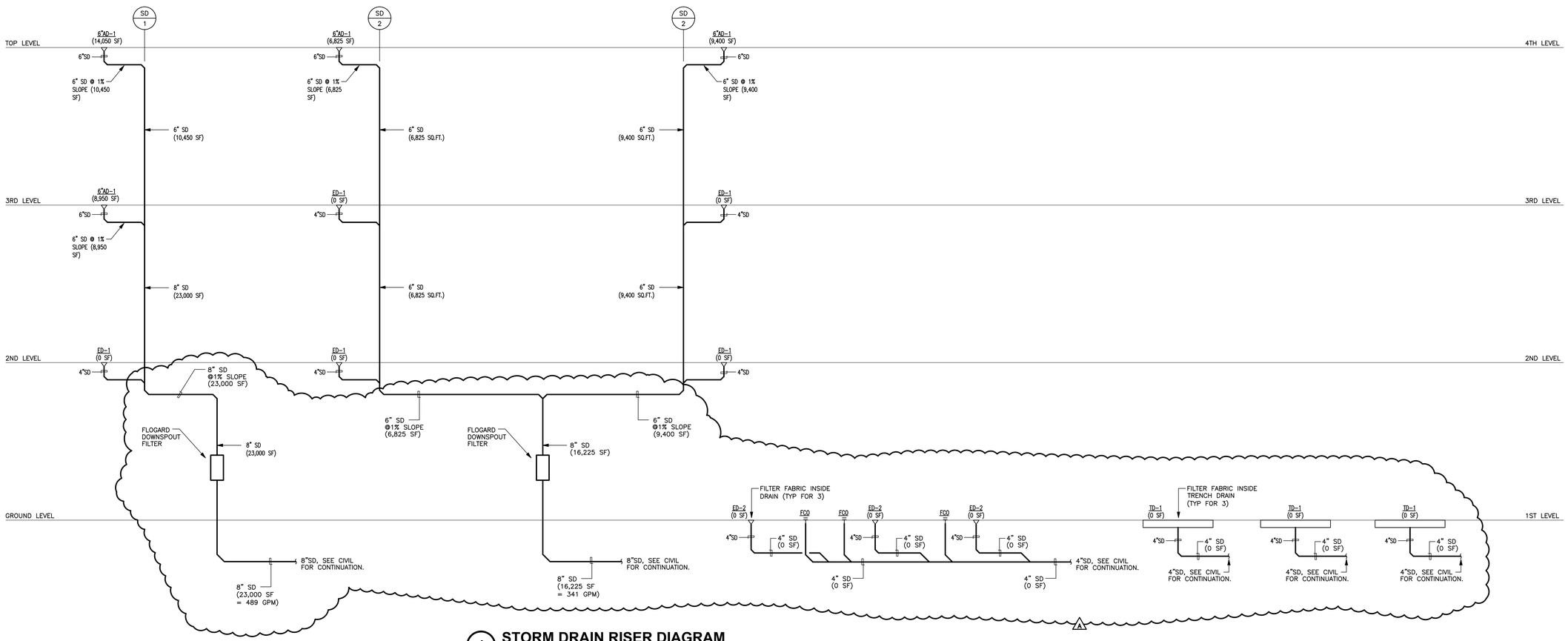

1 **STORM DRAIN RISER DIAGRAM**
SCALE: NTS

Bayley Construction
3730 S. Susan St.
Suite 200
Santa Ana, CA, 92704
CA. License 734880
Tel 714-540-8863
Fax 714-556-8863

Bayley Construction
8005 S.E. 28th St.
P.O. Box 9004
Mercer Island, WA. 98040
WA. License BAYLEC034JC
Tel 206-621-8884
Fax 206-343-7728

BAYLEY CONSTRUCTION

Pacific Parking DESIGN
6 Venture, Suite 275 949.341.0066 t
Irvine, California 92618 949.341.0099 f

DLR Group WWCOT
Architecture Engineering Planning Interiors
4280 Latham Street, Suite H 951.682.0470 t
Riverside, California 92501 951.682.1801 f

GLUMAC
engineers for a sustainable future
18200 Von Karman Ave., Suite 100
Irvine, CA 92612
T. 949.833.8190 F. 949.833.0252
Job No.: 04.10.00861
Contact: JM/SCW/FN
www.glumac.com

REGISTERED PROFESSIONAL ENGINEER
R. LOWELL HOLZER
No. 22941
Exp. 9-30-12
MECHANICAL
STATE OF CALIFORNIA

Public Agency Submittal: .
Issued for Bidding: .
Issued for Construction: .

Revisions:

A 09.15.2011 PERMIT SET

NOT FOR CONSTRUCTION

PHASE II:
FOX
ENTERTAINMENT
PLAZA:
PARKING GARAGE

3605 Market Street,
Riverside, CA 92501

CITY of RIVERSIDE

CITY OF RIVERSIDE

3900 Main Street, Riverside, CA 92522

Phase: Plan Check
Revised .
PPD Project № 10-101

Plumbing Storm Drain Riser Diagram

Issued Date: 05.02.2011
Drawn By: -
Checked By: -

P- P301

Sheet №

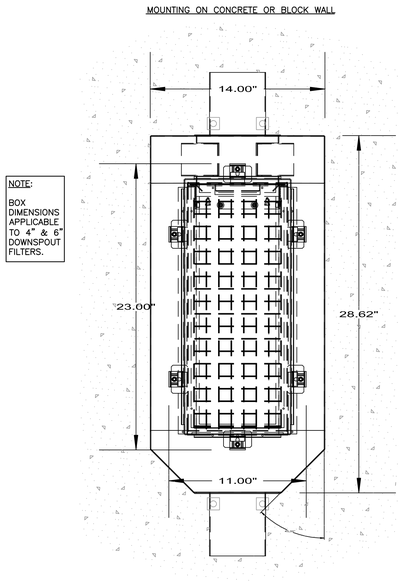

10 TYPICAL FLOGARD DNSOUT FILTER

SCALE: N.T.S.

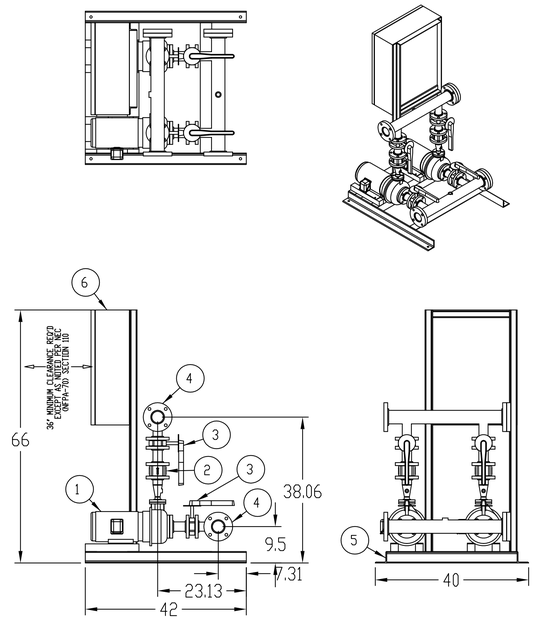

ITEM NO.	DESCRIPTION	Inventory #	QTY.
1	CCES PUMP MODEL 22K W/ 3HP MOTOR		2
2	2" CHECK VALVE AND SYSTEM PIPING	S709-3101-301	2
3	BUTTERFLY VALVE 150# LUG 2"	42-447-3020	4
4	3" HEADER	S717-3372-000	2
5	SYSTEM SKID BASE	S700-0024-301	1
6	SYSTEM POWER AND CONTROL PANEL		1

NOTES:

1. ALL DIMENSIONS SUBJECT TO CHANGE WITHOUT NOTICE
2. PURGE VALVE DRAIN LINE TO BE PIPED TO FLOOR DRAIN IN PROXIMITY OF BOOSTER SYSTEM (BY OTHERS)
3. SEE DATA SHEET FOR L/H OR R/H HEADERS ENTRY/EXIT CONNECTION
4. SEE DATA SYSTEM SHEET FOR HEADER CONNECTION TYPE

SYNCROFLO PACKAGED PUMPING SYSTEMS COMPLY WITH OSHA REGULATIONS AND FEDERAL REGULATION 29 CFR 1910.399. THE ENTIRE PACKAGED SYSTEM IS THIRD PARTY CERTIFIED.

7 DOMESTIC WATER BOOSTER PUMP DETAIL

SCALE: NONE

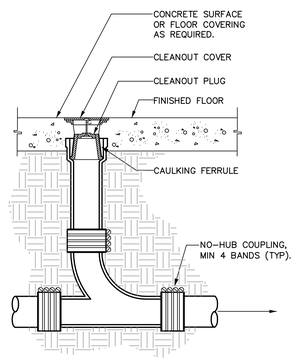

9 FLOOR CLEANOUT

SCALE: NONE

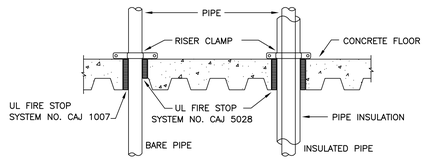

NOTES

1. INSTALLATION SHALL BE A U.L. LISTED SYSTEM W/ THE UNIFORM BUILDING CODE.
2. PENETRATIONS THRU FIRE RATED FLOOR ASSEMBLIES SHALL BE SIMILAR TO ABOVE.
3. WHERE APPROVED A PRE-MANUFACTURED FIRESTOPPING SYSTEM AS MFR'D BY "PROSET" OR EQUAL MAY BE PROVIDED IN LIEU OF THE DETAILS ABOVE. (UL # 1479)

6 FLOOR PENETRATION DETAIL

SCALE: N.T.S.

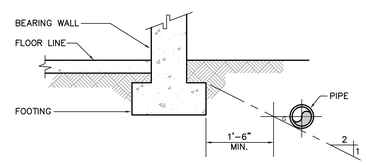

NOTE:

1. COORDINATE EXACT PIPING LOCATION WITH STRUCTURAL AND/OR CIVIL ENGINEER.
2. COORDINATE EXCAVATION & BACKFILL WITH CIVIL ENGINEER.

4 PLUMBING LINES AT FOOTINGS

SCALE: NONE

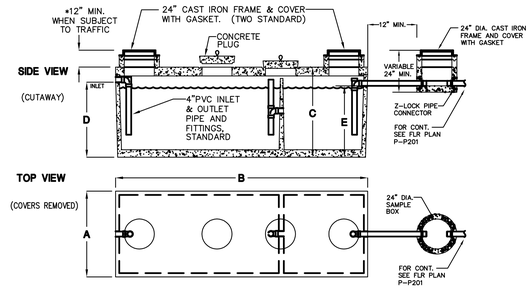

MODEL NUMBER	LIQUID CAPACITY-GALLONS	WIDTH 'A'	OVERALL LENGTH 'B'	TANK HEIGHT 'C'	INLET 'D'	OUTLET 'E'	MINIMUM EXCAVATION WIDTH	MINIMUM EXCAVATION LENGTH	DEPTH OF BURY	MAX. LIFT WEIGHT
KJZ2500G	2500	5'-9"	16'-10"	6'-0"	5'-0"	4'-9"	6'-9"	17'-10"	5' MAX.	22,700

NOTES:

1. TANK DESIGNED FOR H-20 TRAFFIC WHEEL LOAD WITH DRY SOIL CONDITIONS (WTR TABLE BEL TANK)
2. SUITABLE NATIVE OR SUB-BASE SHALL BE PREPARED TO HANDLE ANTICIPATED LOADS. THE EXCAVATION SHALL BE BEDDED WITH SUITABLE GRANULAR MATERIAL AND SHALL BE COMPACTED TO 90% MAXIMUM DRY DENSITY, OR TO REQUIREMENTS OF THE PROJECT GEOTECHNICAL ENGINEER.
3. INSTALLATION SHALL COMPLY WITH MANUFACTURER RECOMMENDATIONS.

2 GREASE INTERCEPTOR DETAIL

SCALE: N.T.S.

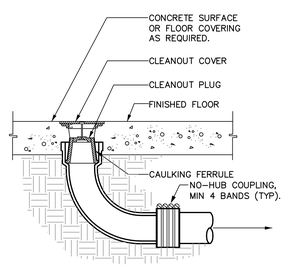

8 END OF LINE FLOOR CLEANOUT

SCALE: NONE

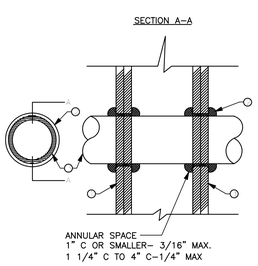

NOTES:

1. GYP BOARD, 5/8" THICK: 1HR. – 1 LAYER, 2HR. – 2 ALYERS.
2. FILL, VOID OR CAVITY MATERIAL – CAULK: CAULK FILL MATERIAL FORCED INTO ANNULAR SPACE TO MAX. EXTENT POSSIBLE AND WITH A MIN. 1/4" DIAMETER BEAD OF CAULK APPLIED TO PERIMETER OF PIPE OR CONDUIT AT ITS EGRESS FROM THE WALL. MINNESOTA MINING & MANUFACTURING CO.: TYPES SP –25 S/L, CP –25 N/S.
3. CONDUIT: NOM. 4" DIAMETER (OR SMALLER) STEEL EMT CONDUIT OR NOM. 1" DIAMETER (OR SMALLER) FLEXIBLE STEEL CONDUIT. A MAX. OF ONE PIPE OR CONDUIT IS PERMITTED IN THE FIRESTOP SYSTEM. PIPE OR CONDUIT TO BE INSTALLED NEAR CENTER OF STUD CAVITY WIDTH AND TO BE RIGIDLY SUPPORTED ON BOTH SIDES OF WALL ASSEMBLY.
4. FIRESTOP SYSTEM: INSTALLED SYMMETRICALLY ON BOTH SIDES OF WALL ASSEMBLY. THE HOURLY F RATING OF THE FIRESTOP SYSTEM IS EITHER 1 OR 2 HR. DEPENDING UPON THE HOURLY FIRE RATING OF THE WALL ASSEMBLY IN WHICH IT IS INSTALLED. THE HOURLY T RATING FOR THE FIRESTOR SYSTEM ARE DEPENDENT UPON THE SIZE OF THE CONDUIT, THE FIRESTOP CONFIGURATION AND THE HOURLY FIRE RATING OF THE WALL ASSEMBLY IN WHICH IT IS INSTALLED. THE FIRESTOP CONFIGURATION IS DEPENDENT UPON THE SIZE OF THE ANNULAR SPACE BETWEEN THE STEEL PIPE OR CONDUIT (OR PIPE COVERING) AND THE PERIMETER OF THE CIRCULAR THROUGH OPENING IN THE GYPSUM WALLBOARD LAYERS.

XHEZ SYSTEM NO. WL1001
F RATINGS – 1 AND 2 HR. (SEE NOTE 4)

5 PIPE THRU RATED WALL DETAIL

SCALE: NONE

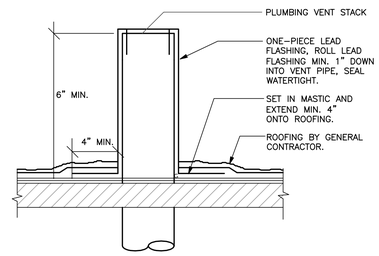

NOTE: PIPE AND FLASHING BY PLUMBING INSTALLER. ROOFING BY GENERAL CONTRACTOR.

3 VENT THRU ROOF

SCALE: NONE

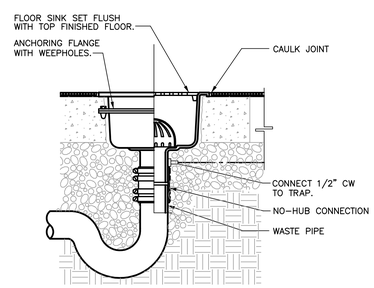

1 FLOOR SINK DETAIL

SCALE: NONE

Bayley Construction
3730 S. Susan St.
Suite 200
Santa Ana, CA. 92704
CA. License 734880
Tel 714-540-8863
Fax 714-556-8863

Bayley Construction
8005 S.E. 28th St.
P.O. Box 9004
Mercer Island, WA. 98040
WA. License BAYLEC034JC
Tel 206-621-8884
Fax 206-343-7728

BAYLEY CONSTRUCTION

Pacific Parking DESIGN
6 Venture, Suite 275 949.341.0066 t
Irvine, California 92618 949.341.0099 f

DLR Group WWCOT
Architecture Engineering Planning Interiors
4280 Latham Street, Suite H 951.682.0470 t
Riverside, California 92501 951.682.1801 f

GLUMAC
engineers for a sustainable future
18200 Von Karman Ave., Suite 100
Irvine, CA 92612
T. 949.833.8190 F. 949.833.0252
Job No.: 04.10.00861
Contact: JM/SCW/FN
www.glumac.com

REGISTERED PROFESSIONAL ENGINEER
FRANK NGUYEN
No. E20828
Exp. 9-30-12
MECHANICAL
STATE OF CALIFORNIA

Public Agency Submittal: .
Issued for Bidding: .
Issued for Construction: .

#	Revisions:
A	09.15.2011 PERMIT SET

NOT FOR CONSTRUCTION

PHASE II: FOX ENTERTAINMENT PLAZA: PARKING GARAGE

3605 Market Street,
Riverside, CA 92501

CITY of RIVERSIDE

CITY OF RIVERSIDE

3900 Main Street, Riverside, CA 92522

Phase: Plan Check
Revised .
PPD Project № 10-101

Plumbing Details

Issued Date: 05.02.2011
Drawn By: -
Checked By:

P-P401 A

Sheet №

PARKING STRUCTURE
STRUCTURAL PLANS

Masonry Cont.

13. *Grouting:* Grout solid all cells. Mechanically vibrate grout in cells.
    - A. Horizontal Construction Joints: Hold grout 1 1/2 inches below top of masonry unit if work is stopped one hour or longer.
    - B. Grout Cover Around Reinforcing Steel, Anchor Bolts and Inserts Penetrating Masonry Shell: 1 inch minimum

14. *Masonry Prism Data:* Submit for each type and compressive strength of masonry required. Signed and sealed by a registered civil engineer in state of California, to Structural Engineer. Compliance with minimum required compressive strength shall be based on CBC Section 2105.1.

Anchorages to Concrete or Masonry

1. *Drill and Epoxy Anchors:* Simpson Epoxy-Tie SET-XP anchoring adhesive complying with ICC-ESR 2508
2. *Mechanical Anchors:* Simpson Strong-Bolt expansion anchors complying with ICC-ESR 1771.
3. *Installation:* Per manufacturer's written instructions and referenced report.
    - A. Drilling Holes in Existing Concrete or Masonry: Use only non-rebar cutting drill bits to drill holes. Locate existing rebar and post-tensioned strands where present prior to drilling holes. Do not cut or damage existing rebar or post-tensioned strands.
    - B. Deleterious Materials: Keep anchors free of dust, grease, and other materials that impair bond. Holes shall be thoroughly cleaned per manufacturer's recommendations prior to installation of epoxy anchors (Deputy Inspector to verify).

Structural Steel

1. *Fabrication and Erection:* AISC 360 and AISC 341, Part I.
2. *Structural Steel:* ASTM standard specifications indicated herein, unless noted otherwise:

    WF and WT Sections .... ASTM A992, Grade 50
    Angles and Channels .... ASTM A36
    Plates .... ASTM A36
    Structural Steel Noted Thus (50) .... ASTM A572 or A992, Grade 50
    Pipes .... ASTM A53, Grade B (35 ksi)
    Rectangular Hollow Structural Sections (HSS) .... ASTM A500, Grade B (46 ksi)
    Anchor Bolts or Unfinished Machine Bolts .... ASTM A307
    Threaded Round Stock .... ASTM A36
    Reinforcing Steel .... see Reinforcing Steel section of general notes

    Furnish readily identifiable structural steel in compliance with CBC Section 2203.1.

3. *High Strength Bolts, Nuts And Washers:*
    - A. Type: ASTM A325, bearing type with threads included in shear plane (A325-N), unless noted otherwise. Provide slip-critical high strength bolts (A325-SC) only where specifically indicated.
    - B. Tightening: Snug tight for A325-N bolts. Tighten A325-SC bolts to at least the minimum proper tension using one of the following tightening methods: Turn-of-nut, calibrated wrench or direct tension indicator tightening.
4. *Welding:*
    - A. Welding Standard: ANSI/AWS D1.1.
    - B. Welding Processes: Electric arc using E70XX electrodes. Submerged arc process with automatic welding (SAW-1) may be used as an alternative.
    - C. Pre-qualified and Non Pre-Qualified Welds: Welds shall be pre-qualified in compliance with welding standard. Where non pre-qualified welds are specifically indicated, qualify by test and procedure qualification test record complying with welding standard.
    - D. Welder Certification: Governing Code Authority.
    - E. Shop Welding Including Ultrasonic Testing of Complete Penetration Groove Welds Welded in Shop: Perform on premises of an approved fabricator as defined in CBC Section 1704.2.2.
    - F. Minimum Fillet Weld Size: AISC Specification Section J2 Table J2.4.
    - G. Shop and Field Weld Identification On Drawings: No attempt is made to differentiate between shop and field welded connections.
5. *Shoring:* Building structural steel is designed for unshored construction unless noted otherwise.
6. *Shop Drawings:* Submit To Architect (Structural Engineer) for review and, upon request, to governing code authority.

Steel Stairs

1. *Design Responsibility:* Contractor to design and obtain separate Governing Code Authority approval for steel stairs prior to fabrication except stairs specifically designed and detailed on contract documents.
2. *Stair Design:* Design components for imposed forces including lateral restraint complying with applicable governing code and contract documents. If building lateral resisting system is used for stair lateral restraint, indicate load paths to building lateral resisting system in calculations and show connections on shop drawings. Where building provides vertical support for stair, indicate loads and load paths to building in calculations and show connections on shop drawings.
3. *Foundation Design:* Base on recommendations in geotechnical report as referenced in Foundations section of general notes.
4. *Shop Drawings and Structural Calculations:* Submit for fabrication and erection of steel stairs signed and sealed by a registered civil engineer to Architect (Structural Engineer) and to Governing Code Authority.
5. *Stabilizing Elements at Structural Members:* Provide to resist eccentric loading, horizontal deflection, twisting, or warping at no additional cost to Owner.

Metal Decking

1. *Roof Decking:*
    - A. Roof Decking and Accessories: ASTM A653, Grade 33, G60 coating, designed for un-shored construction, except as noted.
    - B. *Shop Drawings:* Submit to Architect (Structural Engineer) for review.
2. *Deck Bearing at Supports:* 2 inches minimum.
3. *Deck Lap at Ends:* 2 inches minimum, center laps over supports. Center laps over one top chord angle at open-web steel joists.
4. *Closures at Deck Penetrations (Including Those Not Shown on Structural Drawings):* 16 gauge, welded to decking or supports.
5. *Deck Welding:* AWS D1.3 and CBC Section 2209.2, using a minimum of E60XX electrodes.
    - A. Welder Certification: Governing Code Authority.
    - B. Weld Washers: As required per Applicable Code.

Window Walls, Skylights and Storefronts

1. *Design Responsibility:* Contractor to design and obtain separate Governing Code Authority approval for window walls, skylights and storefronts prior to fabrication.
2. *Window Wall, Skylight and Storefront Design:* Design components for imposed forces including lateral restraint complying with applicable governing code and contract documents. Where building provides vertical or lateral support for window wall, skylights or storefront, indicate loads and load paths to building in calculations and show connections on shop drawings.
3. *Foundation Design:* Base on recommendations in geotechnical report as referenced in Foundations section of general notes.
4. *Shop Drawings and Structural Calculations:* Submit for fabrication and erection of window wall, skylights and storefront signed and sealed by a registered civil engineer to Architect (Structural Engineer) and to Governing Code Authority.
5. *Stabilizing Elements at Structural Members:* Provide to resist eccentric loading, horizontal deflection, twisting, or warping at no additional cost to Owner.

Cast-In-Place Concrete Cont.

13. *Concrete Abutting Structural Masonry Walls:* Roughen concrete surface to full amplitude of 1/16 inch.
14. *Curing:* Maintain concrete above 50 degrees Fahrenheit and in a moist condition for a minimum of 7 days after placement unless otherwise accepted by Architect (Structural Engineer).

Post-Tensioned Concrete

1. *Post-Tensioning Tendons:* ASTM A416, low relaxation, seven wire strands complying with the following:

    1/2-Inch Diameter Tendon Area .... 0.153 square inches
    Ultimate Strength (F_{pu}) .... 270 ksi
    Jacking Stress to Overcome Friction (Maximum) .... 216 ksi
    Anchoring Stress .... 189 ksi
    Effective Design Stress .... 174 ksi

    Final effective forces as indicated on structural drawings are based on the following:

    Slabs .... 26.6 kips/tendon
    Beams .... 26.6 kips/tendon

2. *Post-Tensioning Anchors, Wedges, Couplers and Miscellaneous Hardware:* By manufacturer possessing current ICC-ES Evaluation Report. Submit ICC Report to Architect (Structural Engineer) and Governing Code Authority prior to fabrication. Place couplers at locations acceptable to Architect (Structural Engineer) and approved by Governing Code Authority.
3. *Unbonded Tendon Encasement:* Slippage sheathing consisting of durable, waterproof polyethylene plastic tubing capable of preventing penetration of cement paste and containing a rust-inhibiting grease coating. Repair tears in sheathing greater than 4 inches in length.
4. *Concrete and Reinforcing Steel:* Cast-in-place concrete and reinforcing steel sections of general notes. Do not use grout or concrete containing chlorides.
5. *Chairs or Spacers for Tendons:* Plastic or plastic coated when resting on surfaces to be exposed.
6. *Shop Drawings:* Indicate openings and other penetrations, tendon layout, dead-end and stressing-end locations including anchorage details, tendon support layout with details necessary for installation and member identification marks. Reinforcing steel and post-tensioning shop drawings will not be accepted if openings and other penetrations are not located. Submit to Architect (Structural Engineer) and governing code authority.
7. *Calculations:* For anchorage design and for losses for specific stressing lengths to ensure minimum final effective forces are maintained. Base elongation calculations upon an average modulus of elasticity indicated on mill certificates for tendons being furnished. Consider creep, plastic flow, elastic flow, shrinkage of concrete, relaxation of steel, slip at anchorages and sequence when determining effective design stresses. Submit calculations signed and sealed by a registered civil engineer to Architect (Structural Engineer) and governing code authority.
8. *Additional Calculations:* If field elongation readings or elongations calculated from field force readings vary from calculated required values by more than plus or minus 7 percent, submit additional calculations based on modulus of elasticity shown on mill certificate for corresponding tendons.
9. *Openings and Other Penetrations:* Do not construct in slabs and beams unless specifically shown on submitted and accepted shop drawings.
10. *Shoring:* Coordinate shoring design to be compatible with prestressing sequence. Slab or beam de-shoring is permitted only when all tendons have been stressed, unless shoring is required to carry floors above.
11. *Tendon Placement:* Comply with controlling points shown on drawings and in an approximate parabolic drape between supports unless noted or shown otherwise. Dimensions locate center of gravity of tendon (single tendon or group of tendons). Low points are at mid span unless otherwise shown or noted. Do not place tendon at a horizontal radius less than 10 feet unless noted or shown otherwise. Secure tendons to ensure correct location during and after concrete placement, and no less than every 4 feet.
12. *Slab Tendon Spacing Deviations:* Slight deviations will be permitted when required to avoid openings, inserts, and dowels that are specifically located. Where locations of tendons interfere with each other, one tendon may be moved horizontally in order to avoid interference.
13. *Twisting or Entwining Individual Tendons:* Not permitted within a bundle or beam.

    Reinforcing at Anchorages: Two #5 bars directly behind anchor plate in slabs extending six inches minimum beyond ends of plate. Position bars as near top and bottom corners of bearing plate as possible. Locate reinforcing steel to adequately support structure immediately surrounding anchorage pockets.
14. *Minimum Concrete Coverage Over Tendons:* Maintain the following minimum clear distances between tendons and face of concrete unless noted otherwise:

    Slab End Spans, Bottom .... 1-1/2 inches
    Slab Interior Spans, Top .... 1 inch
    Slab Interior Spans, Bottom .... 3/4 inch
    Beams .... 3 inches

    Grout Coverage Over Anchorage at Slab Edges
    (Extend Tendon Stub 1 inch Maximum) .... 4 inches
15. *Pumped Concrete:* Provide necessary supports so hoses do not bear on tendons.
16. *Concrete Placement at Anchorages:* Ensure complete consolidation and densification of concrete behind anchorages. Ensure pockets are waterproof.
17. *Stressing Commencement:* When concrete attains a minimum compressive strength of 3000 psi and has cured for at least 72 hours.
18. *Stressing Order:*
    - A. Two-Way Slabs:
        1. Uniform tendons
        2. Banded tendons
    - B. Beam and One-Way Slabs:
        1. Uniform tendons in slab
        2. Beam and temperature tendons
19. *Tendons Stressed From Both Ends:* Need not be simultaneous. However, stress each end to a force of 33.0 kips in order to overcome friction.
20. *Restrictions for Cutting or Coring Concrete and Use of Powder Driven Fasteners or Other Inserts:* Anchorages section of general notes.

Masonry

1. *Specified Compressive Strength of Masonry (f'm):* 1500 psi.
2. *Acceptable Methods for Verifying Specified Compressive Strength of Masonry (f'm):* Masonry prism testing, masonry prism test record, or unit strength method as defined in CBC Section 2105.
3. *Special Inspection for Structural Masonry:* Required per CBC Section 1704 since strength design method is used.
4. *Concrete Block:* ASTM C90, medium weight, Grade N-I attaining a minimum compressive strength as required to meet specified compressive strength of masonry (f'm).
5. *Mortar:* ASTM C270, Type S conforming with CBC Section 2103.8 and attaining a minimum compressive strength at 28 days of 1800 psi. Do not use masonry cement or plastic cement.
6. *Grout:* ASTM C476 or CBC Table 2103.12 attaining a minimum compressive strength as required to meet specified compressive strength of masonry (f'm). However, in no case shall grout compressive strength be less than 2000 psi at 28 days.
7. *Portland Cement:* Cast-in-place concrete section of general notes.
8. *Aggregates for Mortar and Grout:* ASTM C144 and C404of natural sand and rock.
9. *Reinforcing Steel:* Reinforcing steel section of general notes unless indicated otherwise.
10. *Reinforcing Steel Splices:* Lap reinforcing steel at splices a minimum of 72 bar diameters, unless noted otherwise. Where clear distance between bars at adjacent splices is 3 inches or less, increase lap length 30 percent unless splices are staggered at least 24 bar diameters.
11. *Dowels for Walls and Columns:* Match size and spacing of wall and column reinforcing steel, unless noted otherwise. Set dowels to align with cells containing reinforcing steel.
12. *Placement:* Set cells in vertical alignment.

Earthwork and Foundations

1. *Geotechnical Engineer:* Retained by Owner and satisfactory to Architect (Structural Engineer) and Governing Code Authority to perform required observations.
2. *Applicable Geotechnical Report:* Perform soils work complying with foundation design based on recommendations in report no. 11-81-118-01, prepared by Converse Consultants, dated March 23, 2011 and subsequent addenda letters. Maintain at site a copy of report and addenda.
3. *Foundation Design Values:*

    Bearing Capacity .... 3,000 to 4,000 psf*
    Lateral Bearing Pressure .... 250 psf/ft*
    Coefficient of Friction 0.3*
    Site Class .... D

    *These values may be increased 33 percent for seismic or wind loading. Increase Lateral Bearing Pressure 200 percent for isolated pole type footings.
4. *Excavations, Backfill and Compaction of Backfill:* Comply with geotechnical report and requirements of CBC Section 1804 and performed only under observation of Geotechnical Engineer. Contractor is responsible for all excavation, lagging, shoring, underpinning and related procedures.
5. *Foundation Excavations:* Observed by and acceptable to Geotechnical Engineer prior to placement of fill, reinforcing steel, or concrete. Foundations are to bear on firm existing soil or approved compacted fill as indicated in geotechnical report. Slope sides of excavation not less than 1 vertical to 1 horizontal as indicated in geotechnical report. Cast concrete directly against excavated surfaces.
6. *Minimum Footing Depths:* 24 and 36 inches below adjacent grade (excluding landscaping soil) or finish floor, whichever is lower, for continuous and isolated footings respectively.
7. *Backfilling of Retaining Walls:* Place after completion and inspection of waterproofing. Adequately shore retaining walls during backfill operation. Unless adequately shored, do not place backfill behind building structure retaining walls (excluding site retaining walls) until concrete at elevated floor levels adjacent to walls are completely poured (in area) and have cured for at least 7 days.
8. *Drainage System:* As required by geotechnical report. Retaining walls were not designed to resist hydrostatic pressure.

Reinforcing Steel

1. *Reinforcing Steel:*

    All bars unless indicated otherwise .... ASTM A615, Grade 60
    Bars to be welded .... ASTM A706, Grade 60
2. *Bars, Excluding Ties, in Ductile Moment Resisting Frames and Boundary Elements in Shear Walls:* ASTM A706, Grade 60 or A615, Grade 60, plus actual yield strength based on mill tests shall not exceed specified yield strength by more than 18,000 psi (retests shall not exceed this value by more than an additional 3,000 psi) and ratio of actual ultimate tensile stress to actual tensile yield strength shall not be less than 1.25.
3. *Wire Reinforcing:*

    Smooth welded wire fabric .... ASTM A185
    Deformed wire stirrups (D4 and larger only) .... ASTM A497
4. *Shop Drawings:* ACI 315, Part B. Show placement including splice locations and lengths and submit to Architect (Structural Engineer). Promptly notify Architect (Structural Engineer) prior to developing reinforcing steel shop drawings if insufficient clear distances between reinforcing steel or other congestion is encountered.
5. *Splice Locations:* As shown on drawings. If locations cannot be determined, verify with Architect (Structural Engineer) prior to developing shop drawings.
6. *Lap Lengths:* As shown on drawings. If lap lengths cannot be determined, verify with Architect (Structural Engineer) prior to developing shop drawings. Lap wire fabric 1-1/2 spaces (1 foot minimum).
7. *Minimum Clearances Between Parallel Reinforcing Steel Including Distance Between Sets of Spliced Bars:* 1 inch or 1 bar diameter, whichever is greater. 1-1/2 inches or 1-1/2 bar diameters, whichever is greater, at columns only. For bundled bars, minimum clear distances between units of bundled bars shall be same as single bars except bar diameter is derived from equivalent total area of bundle.
8. *Minimum Cast-in-Place Concrete Cover:* Min. cover, in.

    Slabs on Grade .... center of slab

    (a) Concrete Exposed to Earth or Weather (Unformed) 3

    (b) Concrete Exposed to Earth or Weather:
    Formed No. 6 through No. 18 Bars 2
    Formed No. 5 Bar and Smaller 1-1/2
    (c) Concrete not Exposed to Earth or Weather:
    Slabs or Walls, No. 11 and Smaller 3/4
    Beams or Columns 1-1/2
9. *Wall and Column Dowels:* Match vertical reinforcing size and spacing, unless noted otherwise.
10. *Chairs or Spacers:* Plastic or plastic coated when resting on exposed surfaces.
11. *Welding:* AWS D1.4.
    - A. Acceptable Reinforcing Steel for Welding: ASTM A706. If welding of reinforcing steel other than A706 is desired, submit proposed procedure, indicating conformance to code and requirements of Governing Code Authority, to Architect (Structural Engineer) for acceptance and to Governing Code Authority for approval prior to execution.
    - B. Welder Certification: Governing Code Authority.
12. *Bending:* Bend cold unless otherwise accepted by Architect (Structural Engineer). Do not field-bend reinforcing steel bars embedded in concrete unless otherwise shown on contract documents or pre-approved by Structural Engineer.

Cast-In-Place Concrete

1. *Applicable Standard:* ACI 301.
2. *Portland Cement:* ASTM C150, Type II.
3. *Normal Weight Concrete (145 pcf):* ASTM C33 for aggregates of natural sand and rock. Concrete to attain the following 28-day minimum compressive strength (f'c), unless noted otherwise:

Footings	3000 psi	Spandrel Walls	4000 psi
Slab on Grade	3000 psi	Structural Slabs & Beams	5000 psi
Retaining/Site Walls	~~4000 psi~~	Ductile Frame Beams & Columns	5000 psi
Non-Frame Columns	5000 psi (A)	Shear Walls	5000 psi

    Maximum Aggregate Sizes: 1-1/2 inches at foundations (A) and 1 inch elsewhere.
4. *Lean Concrete:* Where specifically indicated, containing 2 sacks of cement per cubic yard of concrete.
5. *Maximum Slump:* 5 inches. 4 inches in flatwork.
6. *Shrinkage:* ASTM C157, limit to 0.055 percent.
7. *Use of Chlorides:* Not permitted.
8. *Concrete Mix Design Data:* Submit for each type and compressive strength of concrete required signed and sealed by a registered civil engineer in state to Architect (Structural Engineer). Base mix design on field experience or trial mixtures as stipulated in CBC Section 1905.3.
9. *Shop Drawings:* Submit to Architect (Structural Engineer) indicating locations of concrete construction joints prior to placing concrete. Locate joints at locations to minimize effects of shrinkage as well as being placed at points of low stress.
10. *Conduits, Pipes, and Sleeves:* Do not embed other than electrical conduits 1 inch outside diameter and smaller in structural concrete. Locate electrical conduit 4 inches apart minimum and within middle third of member height.
11. *Chamfered Corners:* Provide ¾ inch chamfer at exposed corners of columns, beams and walls unless detailed otherwise.
12. *Construction Joints:* Provide keys unless detailed otherwise. Roughen surface to ¼ inch amplitude. Thoroughly clean, remove laitance and thoroughly wet and remove standing water before placing new concrete.

Quality Assurance Cont.

CBC 1704.5.1 – Masonry	C	P	Reference
1. Compliance with required inspection provisions and the construction documents and the approved submittals shall be verified		X	ACI 530.1: 1.5
2. Verification of f'_m and f'_{aac} prior to construction except where specifically exempted.		X	ACI 530.1: 1.4B
3. Verification of slump flow and VSI as delivered to the site for self-consolidating grout	X		ACI 530.1: 1.5B.1.b.3
4. At the start of masonry construction verify the following to ensure compliance:			
a. Proportions of site-prepared mortar		X	ACI 530.1: 2.6A
b. Construction of mortar joints		X	ACI 530.1:3.3B
c. Location of reinforcement, connectors, and anchorages.		X	ACI 530.1: 3.4, 3.6A
5. During construction, verify:			
a. Size and location of structural elements		X	ACI 530.1: 3.3F
b. Type, size, and location of anchors, including other details of anchorage of masonry to structural members, frames or other construction.		X	ACI 530: 1.2.2(e), 1.16.1
c. Specified size, grade, and type of reinforcement and anchor bolts		X	ACI 530: 1.15 ACI 530.1: 2.4, 3.4
d. Welding of reinforcing bars	X		ACI 530: 2.1.9.7.2, 3.3.3.4(b)
e. Preparation, construction and protection of masonry during cold weather (temperature below 40° F) or hot weather (temperature above 90° F).		X	ACI 530.1: 1.8C, 1.8D CBC 2104.3, 2104.4
6. Prior to grouting the following shall be verified:			
a. Grout space is clean.		X	ACI 530.1: 3.2D
b. Placement of reinforcement and connectors.		X	ACI 530: 1.13 ACI 530.1: 3.4
c. Proportions of site-prepared grout		X	ACI 530.1: 2.6B
d. Construction of mortar joints.		X	ACI 530.1: 3.3B
7. Verify grout placement to ensure compliance with code and construction document provisions.	X		ACI 530.1: 3.5
8. Observe preparation of required grout specimens, mortar specimens, and/or prisms.	X		ACI 530.1: 1.4 CBC 2105.2.2, 2105.3

CBC 1704.3 – Steel	C	P	Reference
1. Material verification of high-strength bolts, nuts, and washers.			
a. Identification markings to conform to ASTM standards specified in the approved construction documents.		X	AISC 360: A3.3
b. Manufacturer's certificate of compliance required.		X	
2. Inspection of high-strength bolting:			
a. Snug-tight joints.		X	AISC 360: M2.5 CBC 1704.3.3
b. Pretensioned and slip-critical joints using turn-of-nut with matchmarking, twist-off bolt or direct tension indicator methods.		X	
c. Pretensioned and slip-critical joints using turn-of-nut without matchmarking or calibrated wrench methods.	X		
3. Material verification of structural steel and cold-formed steel deck:			
a. For structural steel, identification markings to conform to AISC 360.		X	AISC 360: M5.5
b. For other steel, identification markings to conform to ASTM standards specified in the approved construction documents.		X	Applicable ASTM standard(s)
c. Manufacturer's certified test reports		X	
4. Material verification of weld filler materials:			
a. Identification markings to conform to AWS specification in the approved construction documents	-	X	AISC 360: A3.5 AWS A5
b. Manufacturer's certificate of compliance required.	-	X	
5. Inspection of welding:			
a. Structural steel and cold-formed steel deck:			
1. Complete and partial penetration groove welds.	X		AWS D1.4 CBC 1704.3.1
2. Multipass fillet welds	X		
3. Single pass fillet welds > 5/16"	X		
4. Plug and slot welds	X		
5. Single pass fillet welds = 5/16"		X	
6. Floor and roof deck welds.		X	AWS D1.3
b. Reinforcing steel:			
1. Verification of weldability of reinforcing steel other than ASTM A706		X	AWS D1.4 ACI 318: 3.5.2
2. Welding of reinforcing steel.	X		
6. Inspection of steel frame joint details for compliance:			
a. Bracing and stiffening		X	CBC 1704.3.2
b. Member locations		X	
c. Joint details at each connection		X	

Structural Observation

1. *Definition:* Structural observation is required for the structural system in accordance with CBC Section 1710. Structural observation is the visual observation of elements and connections of structural system at significant construction stages and completed structure for general conformance to contract documents. Structural observation does not waive responsibility for inspections required of building inspector or testing laboratory.
2. *Structural Observer:* Owner will employ a civil or structural engineer or architect to perform structural observation. Engineer or architect will be registered or licensed in state of California.
3. *Evidence of Employment:* Structural Observer will provide evidence of employment by Owner. A letter from Owner or a copy of agreement for services will be sent to Governing Code Authority before first site visit. Structural Observer will also inform Owner of requirements for preconstruction meeting and will preside over this meeting.
4. *Preconstruction Meeting:* Owner or Owner's Representative will coordinate and call for meeting between Structural Engineer or Architect responsible for structural design, Structural Observer, Contractor, affected subcontractors and Testing Laboratory. Structural Observer will preside over this meeting. Purpose of meeting is to identify major structural elements and connections that affect vertical and lateral load resisting systems of structure and to review scheduling of required observations. A record of meeting will be included in first observation report.
5. *Required Site Visits:* Structural Observer will perform site visits at those steps in progress of work that allow for correction of deficiencies without substantial effort or uncovering of work involved. At a minimum, the following significant construction stages require site visits and an observation report from Structural Observer:

    Construction Stages — *Elements/Connections to be Observed*
    A.
    B.
    C.
    D.
    E.
6. *Observation Reports:* Structural Observer will prepare a report for each significant stage of construction observed. Original of observation report will be sent to governing code authority and will be signed and sealed (wet stamped) by responsible Structural Observer. One copy of observation report will be attached to approved construction documents. The copy attached to plans need not be sealed but shall be signed by responsible Structural Observer or their designee. Copies of report will also be given to Owner, Contractor, deputy inspector and Structural Engineer (if other than Structural Observer).
7. *Final Observation Report:* Structural Observer will submit a report that shows that all observed deficiencies were resolved and structural system generally conforms to approved construction documents.

General

1. *Applicable Code:* 2010 California Building Code (CBC).
    - A. Design Wind Speed (CBC Section 1609): 85 mph, Exposure B.
    - B. Design Seismic Criteria (CBC Section 1613 using static force procedure):

    Seismic Importance Factor I: 1.0
    Short Period MCE Acceleration S_S: 1.5
    Long Period MCE Acceleration S_1: 0.6
    Site Coefficients F_a & F_v: .... 1.0 & 1.5, respectively
    Response Modification Coefficient R: 8
    Soil Profile Type: .... S_D
2. *Governing Code Authority:* City of Riverside
3. *Design Intent:* Contract documents indicate information sufficient to convey design intent. Review contract documents and verify field and existing conditions. Promptly notify Architect (Structural Engineer), prior to proceeding with work, if design intent requires further clarification.
4. *Submittals:* Review for completeness and compliance with contract documents prior to submission to Architect (Structural Engineer). Submit prior to fabrication. Submittal review is for general conformance with design intent and does not constitute an authorization to deviate from terms and conditions of contract. When indicated, provide a professional engineer's signature and seal applicable to state where project is located. Maintain at site a copy of reviewed and accepted submittals. Structural Engineer requires 10 working days from receipt of submittal for completion of review.
5. *Modifications and Substitutions:* Must be accepted in writing by Architect (Structural Engineer). No modification or substitution will be accepted via shop drawing review.
6. *Contract Documents Use:* Perform structural related work and develop shop drawings considering contract documents in their entirety. See architectural drawings for top of floor and roof elevations, depressions, slopes, openings, curbs, drains, trenches, slab edge locations, wall overall dimensions and locations of openings not indicated on structural drawings. Any discrepancies between architectural and structural dimensions should be confirmed with the Architect (Structural Engineer) before starting work.
7. *Construction Means and Methods:* Not a part of contract documents. Perform construction means, methods, techniques, sequences and procedures complying with national, state and local safety ordinances. Site visits (including structural observation) by Architect (Structural Engineer) do not constitute supervision of construction means and methods.
8. *Typical Details:* Details titled as "Typical" are applicable throughout project and may not be specifically referenced herein. Contractor is responsible for identifying these details and understanding extent of their application prior to performing work.

Quality Assurance

1. *Testing Laboratory:* Retained by Owner and satisfactory to Architect (Structural Engineer) and Governing Code Authority to perform required tests and inspections of this contract and applicable code.
2. *Material Certification:* Submit laboratory test reports certifying reinforcing steel, stressing tendons, and structural steel are of identifiable tested stock to Owner, Testing Laboratory, Architect (Structural Engineer) and, upon request, to Governing Code Authority. Ensure materials are properly tagged for identification. If laboratory test reports cannot be made available or if material cannot be identified, Testing Laboratory will perform tests as directed by Architect (Structural Engineer). Contractor shall pay Testing Laboratory for costs related to tests and inspections of unidentifiable materials or materials furnished without laboratory test reports, materials found deficient after initial tests and inspections, or materials replacing deficient materials.
3. *Tests and Inspections Reports:* Testing Laboratory will submit stating compliance or noncompliance with contract documents to Owner, Contractor, Architect (Structural Engineer) and, upon request, to Governing Code Authority.
4. *Continuous Special Inspection:* Testing Laboratory will provide continuous inspection (noted as 'C' in tables below) complying with CBC Section 1704, unless otherwise noted. Periodic inspection (noted as 'P' in tables below) is not permitted unless specifically indicated below or otherwise accepted by Architect (Structural Engineer):

CBC 1704.7 – Inspection of Soils	C	P	Reference
1. Verify materials below footings are adequate to achieve the desired bearing capacity.		X	
2. Verify excavations are extended to proper depth and have reached proper material.		X	
3. Perform classification and testing of controlled fill materials.		X	
4. Verify use of proper materials, densities and lift thicknesses during placement and compaction of controlled fill.	X		
5. Prior to placement of controlled fill, observe subgrade and verify that site has been prepared properly.		X	

CBC 1704.4 – Concrete	C	P	Reference
1. Inspection of reinforcing steel, including prestressing tendons and placement.		X	ACI 318: 3.5, 7.1-7.7 CBC 1913.4
2. Inspection of reinforcing steel welding in accordance with CBC Table 1704.3 Item 5b.	-	-	AWS D1.4 ACI 318: 3.5.2
3. Inspect bolts to be installed in concrete prior to and during placement of concrete.	X		ACI 318: 8.1.3, 21.2.8 CBC 1911.5, 1912.1
4. Inspection of anchors installed in hardened concrete.		X	ACI 318: 3.8.6, 8.1.3, 21.2.8 CBC 1912.1
5. Verify use of required mix design.		X	ACI 318: Ch. 4, 5.2-5.4 CBC1912.1
6. At time fresh concrete is sampled to fabricate specimens for strength tests, perform slump and air content tests and determine the temperature of the concrete.	X		ASTM C172 ASTM C31 ACI 318: 5.6, 5.8 CBC 1913.10
7. Inspection of concrete placement for proper application techniques.	X		ACI 318: 5.9, 5.10 CBC 1913.6, 1913.7, 1913.8
8. Inspection for maintenance of specified curing temperature and techniques.		X	ACI 318: 5.11-5.13 CBC 1913.9
9. Inspection of prestressed concrete.			
a. Application of prestressing forces.	X		ACI 318: 18.20
10. Verification of in-situ concrete strength, prior to stressing of tendons in post-tensioned concrete and prior to removal of shores and forms from beams and structural slabs.		X	ACI 318: 6.2
11. Inspect formwork for shape, location, and dimensions of the concrete member being formed.		X	ACI 318: 6.1.1

Structural Sheet Index

Sheet Number	Description
PS-1.1	GENERAL NOTES
PS-2.1	TYPICAL REBAR SCHEDULES and DETAILS
PS-2.2	TYPICAL FOUNDATION DETAILS
PS-2.3	TYPICAL ELEVATED CONCRETE REBAR SLAB DETAILS
PS-2.4	TYPICAL POST-TENSIONED CONCRETE SLAB DETAILS
PS-2.5	TYPICAL MASONRY DETAILS
PS-3.1	LEVEL P-1 FOUNDATION PLAN
PS-3.2	LEVEL P-2 FRAMING PLAN
PS-3.3	LEVEL P-3 FRAMING PLAN
PS-3.4	LEVEL P-4 FRAMING PLAN
PS-4.1	EAST-WEST RUNNING CONCRETE FRAME ELEVATIONS
PS-4.2	NORTH-SOUTH RUNNING CONCRETE FRAME ELEVATIONS
PS-4.3	CONCRETE FRAME COLUMN SCHEDULE and DETAILS
PS-4.4	CONCRETE FRAME COLUMN DETAILS
PS-5.1	GRAVITY COLUMN SCHEDULE and DETAILS
PS-6.1	BEAM ELEVATIONS
PS-6.2	BEAM ELEVATIONS
PS-7.1	ENLARGED STAIR/ELEVATOR PLANS
PS-8.1	MISCELLANEOUS DETAILS

GENERAL NOTES

BAYLEY CONSTRUCTION

Bayley Construction
3730 S. Susan St.
Suite 200
Santa Ana, CA. 92704
CA. License 734880
Tel 714-540-8863
Fax 714-556-8863

Bayley Construction
8005 S.E. 28th St.
P.O. Box 9004
Mercer Island, WA. 98040
WA. License
BAYLEC034JC
Tel 206-621-8884
Fax 206-343-7728

Pacific Parking DESIGN
6 Venture, Suite 275 949.341.0066 t
Irvine, California 92618 949.341.0099 f

DLR Group WWCOT
Architecture Engineering Planning Interiors
4280 Latham Street, Suite H 951.682.0470 t
Riverside, California 92501 951.682.1801 f

REGISTERED PROFESSIONAL ENGINEER
DENNIS K. BASHAW
SE 3014
EXP. 3/31/13
STRUCTURAL
STATE OF CALIFORNIA

Public Agency Submittal:
Issued for Bidding:
Issued for Construction:

Revisions:
A 09.15.2011 PERMIT SET

PHASE II:
FOX
ENTERTAINMENT
PLAZA:
PARKING GARAGE

3605 Market Street, Riverside, CA 92501

CITY of RIVERSIDE

3900 Main Street, Riverside, CA 92522

Phase:
Revised
PPD Project № 10-101

GENERAL NOTES

Issued Date: 05.02.2011
Drawn By: JT/MT/CG
Checked By: DKB

PS-1.1
Sheet №

TYPICAL NON–SEISMIC STRAIGHT BAR DEVELOPMENT LENGTH SCHEDULE																			
BAR SIZE		#3		#4		#5		#6		#7		#8		#9		#10		#11	
BAR DIAMETER (in)		0.375		0.500		0.625		0.750		0.875		1.000		1.128		1.270		1.410	
BAR COVER		TOP	BOT	TOP	BOT	TOP	BOT	TOP	BOT	TOP	BOT	TOP	BOT	TOP	BOT	TOP	BOT	TOP	BOT
3000 psi	C1	13	12	18	14	22	17	26	20	38	29	43	33	49	38	55	42	61	47
	C2	22	17	29	22	36	28	43	33	63	48	72	55	81	62	91	70	101	78
	C3	33	25	43	33	54	42	65	50	94	72	107	83	121	93	136	105	151	116
4000 psi	C1	12	12	15	12	19	15	23	18	33	25	37	28	42	33	47	37	53	41
	C2	19	15	25	19	31	24	37	29	54	42	62	48	70	54	79	61	87	67
	C3	28	22	37	28	47	36	56	43	81	63	93	72	105	81	117	90	131	101
5000 psi	C1	12	12	14	12	17	13	20	16	29	23	34	26	38	29	43	33	47	36
	C2	17	13	23	17	28	22	34	26	49	38	56	43	63	48	71	54	78	60
	C3	25	20	34	26	42	32	50	39	73	56	83	64	94	72	106	81	117	90
6000 psi	C1	12	12	12	12	16	12	19	14	27	21	31	24	34	27	39	30	43	33
	C2	16	12	21	16	26	20	31	24	44	34	51	39	57	44	64	50	71	55
	C3	23	18	31	24	38	29	46	35	66	51	76	58	86	66	96	74	107	82

TYPICAL NON–SEISMIC STRAIGHT BAR SPLICE LENGTH SCHEDULE																			
BAR SIZE		#3		#4		#5		#6		#7		#8		#9		#10		#11	
BAR DIAMETER (in)		0.375		0.500		0.625		0.750		0.875		1.000		1.128		1.270		1.410	
BAR COVER		TOP	BOT	TOP	BOT	TOP	BOT	TOP	BOT	TOP	BOT	TOP	BOT	TOP	BOT	TOP	BOT	TOP	BOT
3000 psi	C1	17	13	23	18	28	22	34	26	49	38	56	43	63	49	71	55	79	61
	C2	28	22	38	29	47	36	56	43	81	63	93	72	105	81	118	91	131	101
	C3	42	33	56	43	70	54	84	65	122	94	139	107	157	121	177	136	196	151
4000 psi	C1	15	12	20	15	25	19	29	23	43	33	49	37	55	42	62	47	68	53
	C2	25	19	33	25	41	31	49	37	71	54	81	62	91	70	102	79	114	87
	C3	37	28	49	37	61	47	73	56	106	81	121	93	136	105	153	118	170	131
5000 psi	C1	13	12	18	14	22	17	26	20	38	29	44	34	49	38	55	43	61	47
	C2	22	17	29	23	36	28	44	34	63	49	72	56	81	63	92	71	102	78
	C3	33	25	44	34	54	42	65	50	95	73	108	83	122	94	137	106	152	117
6000 psi	C1	12	12	16	12	20	16	24	19	35	27	40	31	45	34	50	39	56	43
	C2	20	16	27	21	33	26	40	31	58	44	66	51	74	57	84	64	93	71
	C3	30	23	40	31	49	38	59	46	86	66	99	76	111	86	125	96	139	107

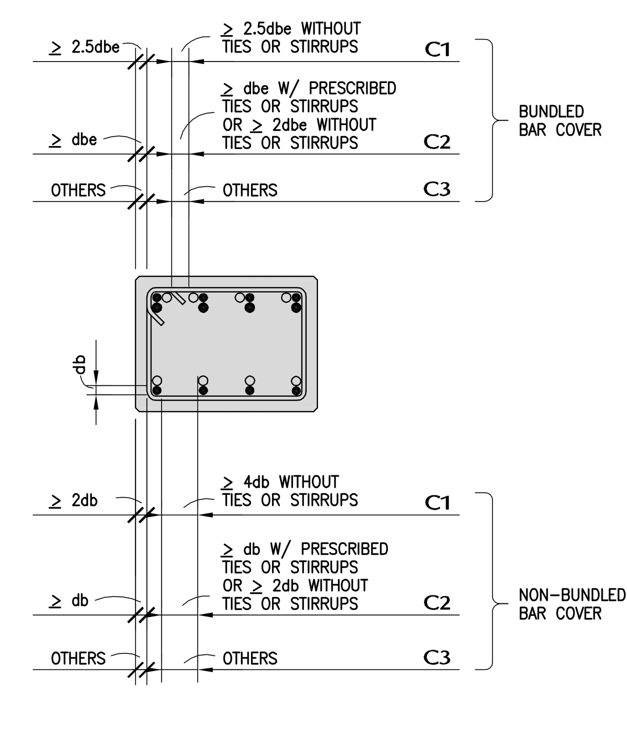

BAR COVER DIAGRAM

EFFECTIVE BUNDLED BAR UNIT DIAMETER "dbe"						
BAR	#6	#7	#8	#9	#10	#11
3-BAR BUNDLE	.35	.66	1.14	1.83	2.94	4.44
4-BAR BUNDLE	.63	1.17	2.03	3.25	5.23	7.90

NOTES:

1. ALL LENGTHS INDICATED IN SCHEDULE APPLY TO NORMAL WEIGHT CONCRETE APPLICATIONS.
2. FOR LIGHT WEIGHT CONCRETE APPLICATIONS, LENGTHS INDICATED IN SCHEDULE SHALL BE MULTIPLIED BY 1.3.
3. NO EPOXY COATING.
4. FOR DETERMINING APPLICABLE BAR LAYOUT for BUNDLED BARS, USE EFFECTIVE BAR UNIT DIAMETER "dbe" as SCHEDULED.
5. SEE NOTES 6 – 9 ON DETAIL 3/–.

TYPICAL GRADE 60 NON-SEISMIC REINFORCING SPLICE and DEVELOPMENT LENGTH SCHEDULE — 4

TYPICAL SEISMIC BAR DEVELOPMENT and SPLICE LENGTH SCHEDULE																				
BAR SIZE			#3		#4		#5		#6		#7		#8		#9		#10		#11	
BAR DIAMETER (in)			0.375		0.500		0.625		0.750		0.875		1.000		1.128		1.270		1.410	
BAR LOCATION			TOP	BOT	TOP	BOT	TOP	BOT	TOP	BOT	TOP	BOT	TOP	BOT	TOP	BOT	TOP	BOT	TOP	BOT
3000 psi	A	HOOKED WITHIN CORE	7	7	9	9	11	11	13	13	15	15	17	17	19	19	22	22	24	24
	B	STRAIGHT WITHIN CORE	23	16	30	22	37	27	45	32	52	37	59	42	67	48	75	54	84	60
	C	STRAIGHT OUTSIDE CORE	36	26	48	34	59	43	71	51	83	59	95	67	107	76	120	86	134	96
4000 psi	A	HOOKED WITHIN CORE	6	6	8	8	10	10	11	11	13	13	15	15	17	17	19	19	21	21
	B	STRAIGHT WITHIN CORE	21	15	26	19	32	23	39	28	45	32	52	37	58	42	65	47	72	52
	C	STRAIGHT OUTSIDE CORE	34	24	41	30	52	36	62	44	72	52	82	59	93	66	104	75	116	83
5000 psi	A	HOOKED WITHIN CORE	6	6	7	7	9	9	10	10	12	12	14	14	15	15	17	17	19	19
	B	STRAIGHT WITHIN CORE	21	15	23	17	29	21	35	25	40	29	46	33	52	37	58	42	65	46
	C	STRAIGHT OUTSIDE CORE	34	24	37	27	46	33	55	40	64	46	74	53	83	59	93	67	104	74
6000 psi	A	HOOKED WITHIN CORE	6	6	6	6	8	8	9	9	11	11	12	12	14	14	16	16	17	17
	B	STRAIGHT WITHIN CORE	21	15	21	15	26	19	32	23	37	26	42	30	47	34	53	38	59	42
	C	STRAIGHT OUTSIDE CORE	34	24	34	24	42	30	50	36	59	42	67	48	76	54	85	61	95	68

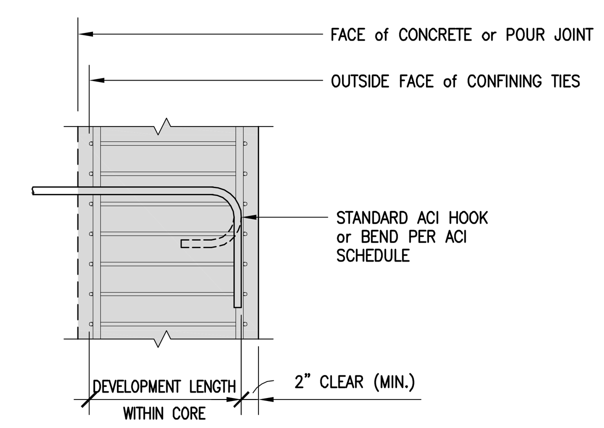

(A) BAR LOCATION
(HOOKED WITHIN CORE)

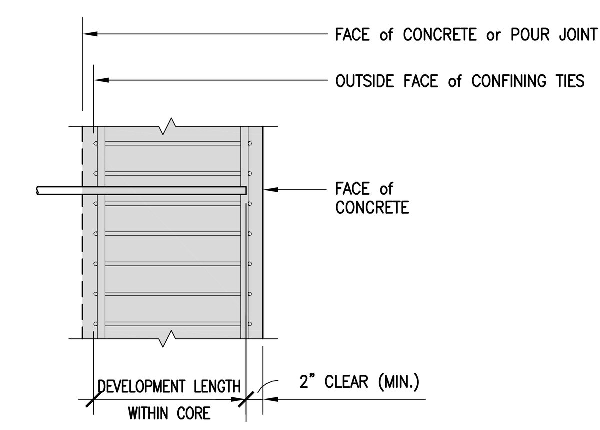

(B) BAR LOCATION
(STRAIGHT WITHIN CORE)

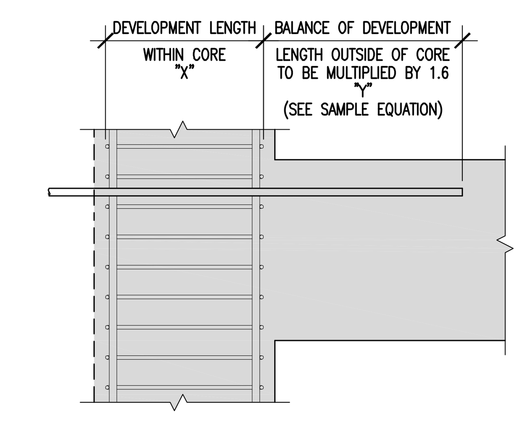

(C) BAR LOCATION
(STRAIGHT OUTSIDE CORE)

NOTES:

1. ALL HOOKED BARS SHALL EXTEND AS FAR AS POSSIBLE TO THE OPPOSITE FACE WITH A MINIMUM 2" END COVER and EMBEDMENT NOT LESS THAN THE DEVELOPMENT SCHEDULE.
2. MINIMUM SIDE COVER 2 1/2".
3. ALL LENGTHS INDICATED IN SCHEDULE APPLY TO NORMAL WEIGHT CONCRETE APPLICATIONS.
4. FOR LIGHT WEIGHT CONCRETE APPLICATIONS, LENGTHS INDICATED IN SCHEDULE SHALL BE MULTIPLIED BY 1.25.
5. NO EPOXY COATING.
6. TOP BARS ARE HORIZONTAL BARS WITH MORE THAN 12 INCHES OF CONCRETE CAST BELOW.
7. BOTTOM BARS ARE HORIZONTAL BARS WITH LESS THAN 12 INCHES OF CONCRETE CAST BELOW, AND ALL VERTICAL BARS.
8. FOR GRADE 75 REINFORCING MULTIPLY THE LENGTHS IN THE SCHEDULE BY 1.25.
9. FOR SPLICES OR DEVELOPMENT OF INDIVIDUAL BARS WITHIN A BUNDLE: FOR 3 BAR BUNDLES MULTIPLY THE SCHEDULE LENGTHS BY 1.20. FOR 4 BAR BUNDLES MULTIPLY THE SCHEDULE LENGTHS BY 1.33. ENTIRE BUNDLE SETS SHALL NOT BE LAP SPLICED.

NOTE:

STRAIGHT BARS TERMINATING AT A JOINT SHALL PASS THROUGH THE CONFINED CORE OF A SEISMIC COLUMN OR BOUNDARY ELEMENT. ANY PORTION OF THE STRAIGHT EMBEDMENT NOT WITHIN THE CONFINED CORE SHALL BE INCREASED BY A FACTOR OF 1.6. (SEE EQUATION BELOW)

SAMPLE EQUATION FOR DETAIL C:

DEVELOPMENT OF #8 TOP BAR (STRAIGHT) IN 5000 PSI CONCRETE

REQUIRED STRAIGHT DEVELOPMENT LENGTH WITHIN CORE PER SCHEDULE = 46"

(X) CORE DIMENSION = 27"

(Y) BALANCE OF DEVELOPMENT LENGTH = (46" – 27") = 19"
MULTIPLY 19" x 1.6 (AND ROUND UP) = 31"

THEREFORE, TOTAL DEVELOPMENT LENGTH REQUIRED IS (X + Y) OR, 27" + 31" = 58"

TYPICAL GRADE 60 SEISMIC REINFORCING SPLICE and DEVELOPMENT LENGTH SCHEDULE — 3

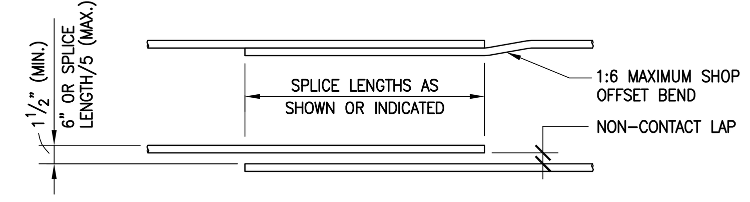

TYPICAL SPLICE DIAGRAM

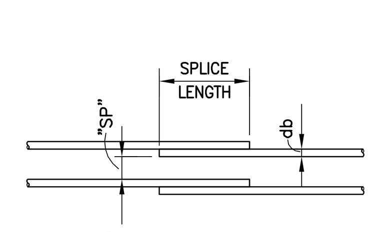

CLEAR BAR SPACING "SP"
(NON–STAGGERED SPLICES)

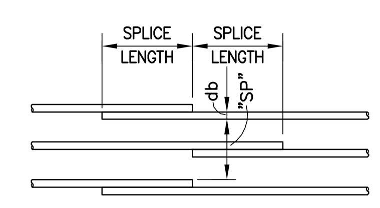

INCREASED CLEAR BAR SPACING "SP"
(STAGGERED SPLICES)

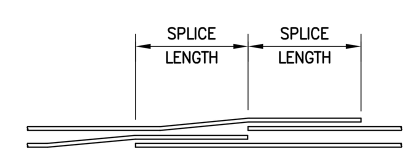

3-BAR BUNDLE SPLICE DIAGRAM

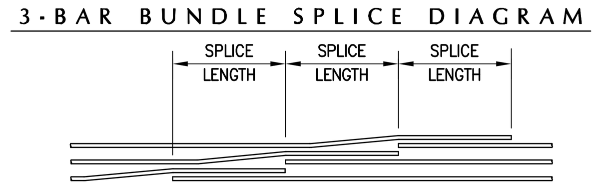

4-BAR BUNDLE SPLICE DIAGRAM

NOTES:

1. BUNDLED BARS of MORE THAN 2 BARS INCLUDING SPLICING BAR in SAME PLANE is NOT PERMITTED. ACCEPTABLE PROFILES ARE ∴ & ∷ .
2. DO NOT SPLICE MORE THAN ONE BAR PER LOCATION in a BUNDLE.
3. ENTIRE BUNDLE SETS SHALL NOT BE LAP SPLICED.

TYPICAL REINFORCING SPLICE DETAILS — 11

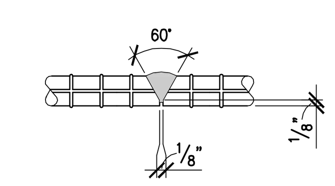

HORIZONTAL BARS
(#9 BARS and LARGER)

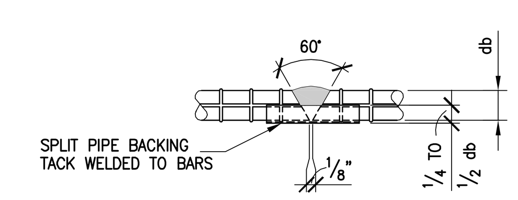

HORIZONTAL BARS
(SMALLER THAN #9 BARS)

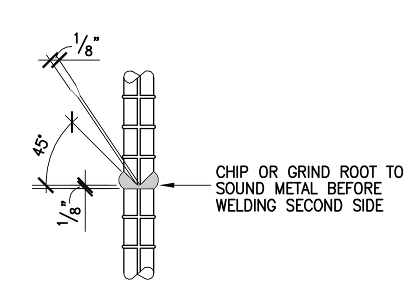

VERTICAL BARS

NOTES:

1. A PREQUALIFICATION TENSION TEST SHALL BE MADE BY AN APPROVED TESTING LABORATORY ON SAMPLES OF EVERY SIZE BAR BEING WELDED UTILIZING MATERIALS, CONDITIONS and WELDING PROCEDURES CONFORMING to CBC and REQUIREMENTS of GOVERNING CODE AUTHORITY.
2. BUTT WELDS SHALL BE STAGGERED AT ADJACENT BARS. NOTIFY ARCHITECT (STRUCTURAL ENGINEER) for APPROPRIATE OFFSET DISTANCES.
3. ALL BARS TO BE WELDED SHALL BE ASTM A706.

TYPICAL REINFORCING BUTT WELDS (ALTERNATE to SPLICES) — 6

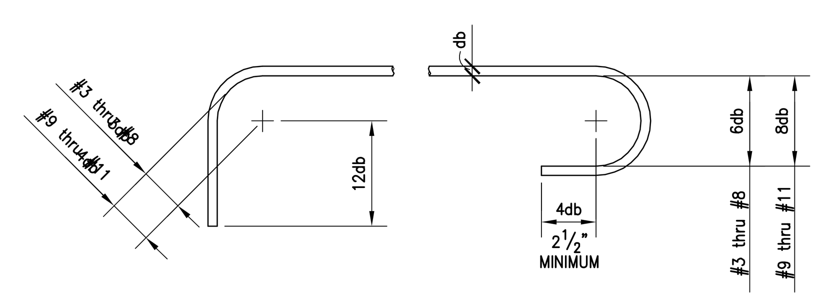

STANDARD HOOKS OTHER THAN STIRRUPS and TIES

BAR DIAMETER DISTANCES									
BAR DIAMETERS	BAR SIZE								
	#3	#4	#5	#6	#7	#8	#9	#10	#11
3db	1 1/8"	1 1/2"	1 7/8"	2 1/4"	2 5/8"	3"	–	–	–
4db	1 1/2"*	2"*	2 1/2"	3"	3 1/2"	4"	4 1/2"	5"	5 1/2"
6db	2 1/4"*	3"	3 3/4"	4 1/2"	5 1/4"	6"	–	–	–
8db	–	–	–	–	–	–	9"	10"	11"
12db	4 1/2"	6"	7 1/2"	9"	10 1/2"	12"	13 1/2"	15"	16 1/2"

* INDICATES MINIMUM DIMENSIONS MAY GOVERN

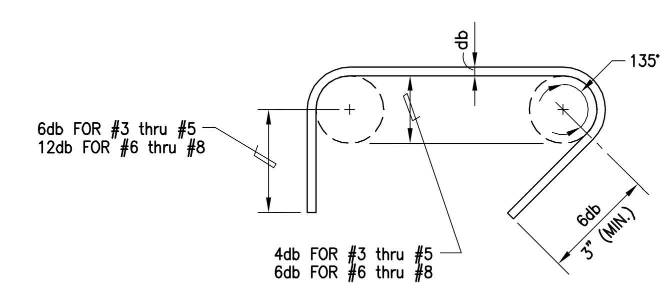

STANDARD HOOKS for STIRRUPS and TIES

STANDARD ACI REINFORCING STEEL HOOKS, BENDS and LAPS — 1

Bayley Construction
3730 S. Susan St.
Suite 200
Santa Ana, CA. 92704
CA. License 734880
Tel 714-540-8863
Fax 714-556-8863

Bayley Construction
8005 S.E. 28th St.
P.O. Box 9004
Mercer Island, WA. 98040
WA. License
BAYLEC034JC
Tel 206-621-8884
Fax 206-343-7728

BAYLEY CONSTRUCTION

Pacific Parking DESIGN
6 Venture, Suite 275 949.341.0066 t
Irvine, California 92618 949.341.0099 f

DLR Group WWCOT
Architecture Engineering Planning Interiors
4280 Latham Street, Suite H 951.682.0470 t
Riverside, California 92501 951.682.1801 f

REGISTERED PROFESSIONAL ENGINEER
DENNIS K. BASHAW
SE 3014
EXP. 3/31/13
STRUCTURAL
STATE OF CALIFORNIA

Public Agency Submittal:
Issued for Bidding:
Issued for Construction:

Revisions:
A 09.15.2011 PERMIT SET

PHASE II:
FOX ENTERTAINMENT PLAZA:
PARKING GARAGE

3605 Market Street, Riverside, CA 92501

CITY of RIVERSIDE

CITY OF RIVERSIDE

3900 Main Street, Riverside, CA 92522

Phase:
Revised
PPD Project № 10-101

TYPICAL REBAR SCHEDULES and DETAILS

Issued Date: 05.02.2011
Drawn By: JT/MT/CG
Checked By: DKB

PS-2.1
Sheet №

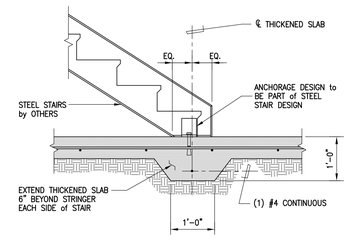

TYPICAL THICKENED SLAB at STAIR | 10

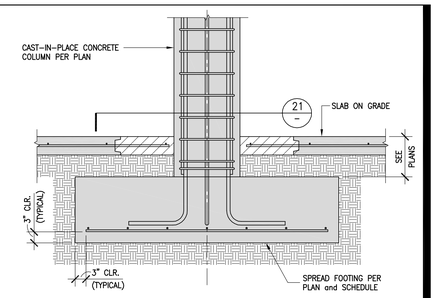

TYPICAL SPREAD FOOTING DETAIL | 5

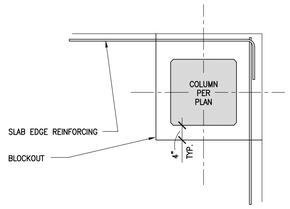

PLAN at CORNER COLUMN

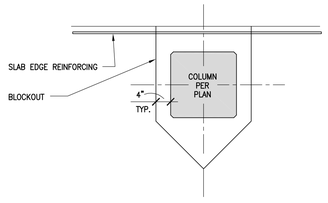

PLAN at PERIMETER COLUMN

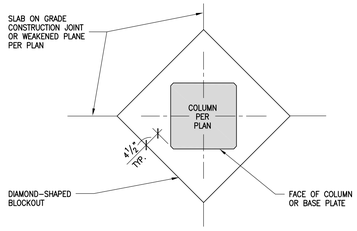

PLAN at TYPICAL CONDITION

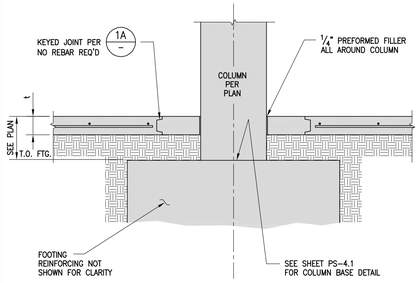

SECTION THRU FOOTING

TYPICAL SLAB ON GRADE at COLUMN DETAIL | 21

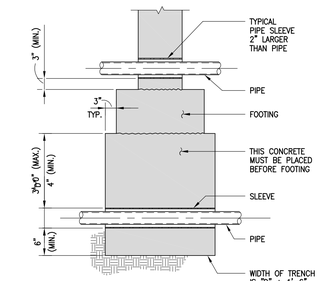

PIPES THRU FOUNDATION

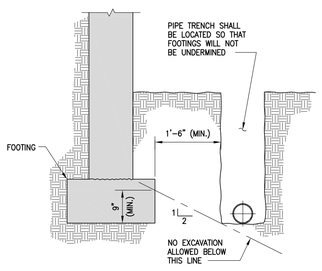

PIPE and TRENCH ADJACENT to FOUNDATION

TYPICAL PIPES THRU or TRENCHES ADJACENT to FOUNDATION DETAIL | 18

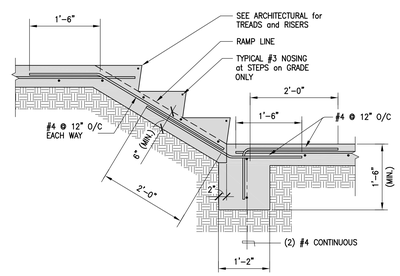

TYPICAL CONCRETE STEPS or RAMP SLAB on GRADE | 14

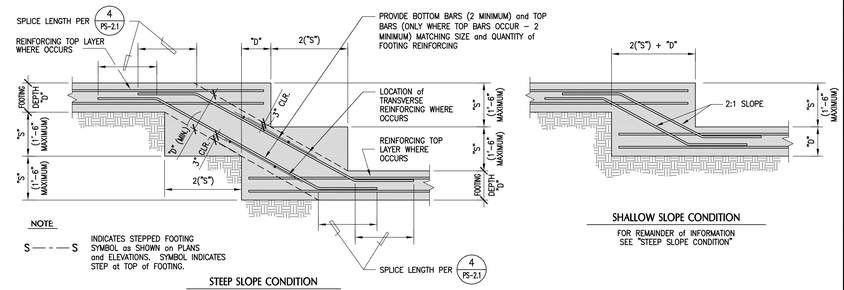

TYPICAL STEPPED FOOTING DETAIL | 4

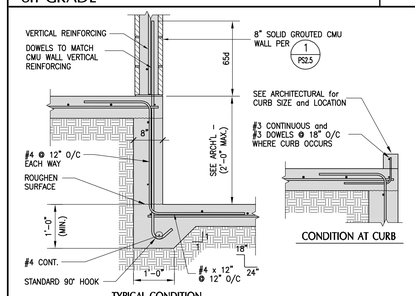

TYPICAL SLAB on GRADE CHANGE in ELEVATION | 13

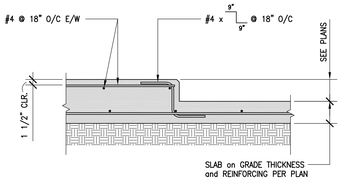

TYPICAL CONCRETE PAD at SLAB ON GRADE | 8

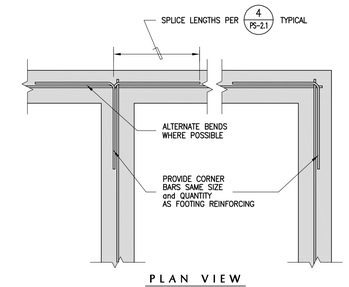

TYPICAL FOOTING REINFORCING at CORNERS and INTERSECTIONS | 3

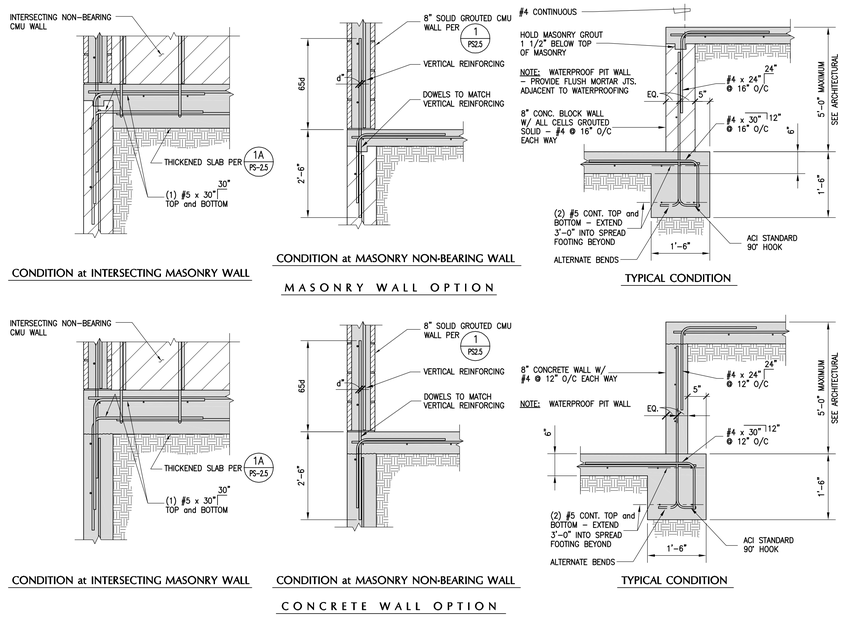

TYPICAL 5'-0" (MAXIMUM) HIGH RETAINING WALL AT ELEVATOR PIT DETAIL | 11

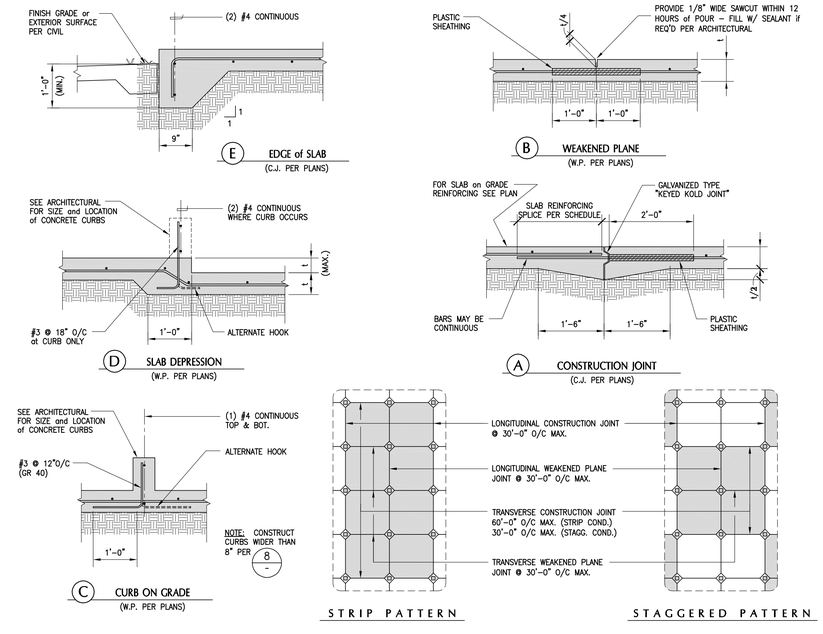

TYPICAL CONCRETE SLAB on GRADE DETAILS | 1

Bayley Construction
3730 S. Susan St.
Suite 200
Santa Ana, CA, 92704
CA. License 734880
Tel 714-540-8863
Fax 714-556-8863

Bayley Construction
8005 S.E. 28th St.
P.O. Box 9004
Mercer Island, WA, 98040
WA. License
BAYLEC034JC
Tel 206-621-8884
Fax 206-343-7728

BAYLEY CONSTRUCTION

Pacific Parking DESIGN
6 Venture, Suite 275 949.341.0066 t
Irvine, California 92618 949.341.0099 f

DLR Group WWCOT
Architecture Engineering Planning Interiors
4280 Latham Street, Suite H 951.682.0470 t
Riverside, California 92501 951.682.1801 f

REGISTERED PROFESSIONAL ENGINEER DENNIS K. BASTIAN No. 5841 Exp. 12/31/13 STRUCTURAL STATE OF CALIFORNIA

Public Agency Submittal:
Issued for Bidding:
Issued for Construction:

#	Revisions:	
A	09.15.2011	PERMIT SET

PHASE II: FOX ENTERTAINMENT PLAZA: PARKING GARAGE

3605 Market Street, Riverside, CA 92501

CITY of RIVERSIDE

CITY OF RIVERSIDE

3900 Main Street, Riverside, CA 92522

Phase:
Revised
PPD Project № 10-101

TYPICAL FOUNDATION DETAILS

Issued Date: 05.02.2011
Drawn By: JT/MT/CG
Checked By: DKB

PS-2.2
Sheet №

NOTES:

1. DIAMETER OF CONDUITS AND PIPES 'd' EMBEDDED WITHIN A SLAB SHALL NOT EXCEED 1/3 OF THE TOTAL SLAB THICKNESS 't' AND SHALL BE PLACED IN THE MIDDEL THIRD.
2. MINIMUM CONCRETE COVER FOR CONDUITS AND PIPES:
   a. CONCRETE EXPOSED TO EARTH OR WEATHER.....1 1/2" MIN.
   b. CONCRETE NOT EXPOSED TO WEATHER OR IN CONTACT WITH GROUND.....3/4" MIN.
3. CONDUITS SHALL BE SPACED NOT CLOSER THAN 3d ON CENTER OF THE LARGEST ADJACENT CONDUIT OR PIPE.
4. CONDUITS AND PIPES SHALL BE INSTALLED SO THAT CUTTING, BENDING, OR DISPLACEMENT DISPLACEMENT OF REINFORCING WILL NOT BE REQUIRED.
5. CONDUITS SHALL NOT BE PLACED IN THREE (3) LAYERS.

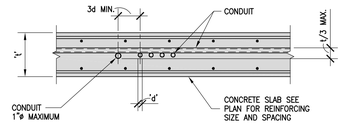

TYPICAL CONDUIT and PIPE PLACEMENT in ELEVATED CONCRETE SLABS | 5

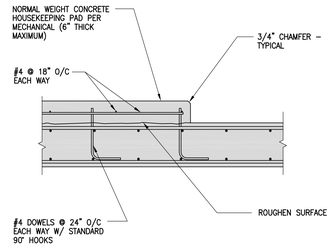

TYPICAL HOUSEKEEPING PAD | 4

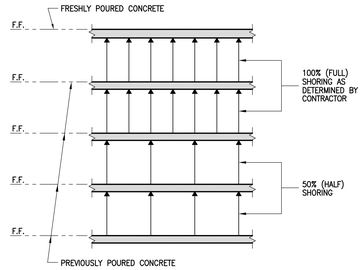

ELEVATION

TYPICAL MINIMUM SHORING REQUIREMENTS | 3

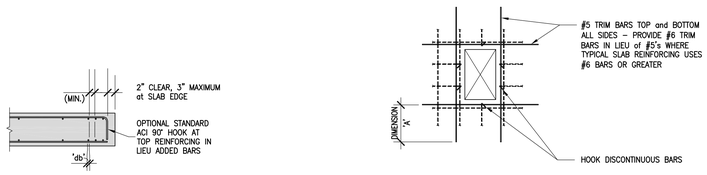

B OPENINGS TO 30" MAXIMUM

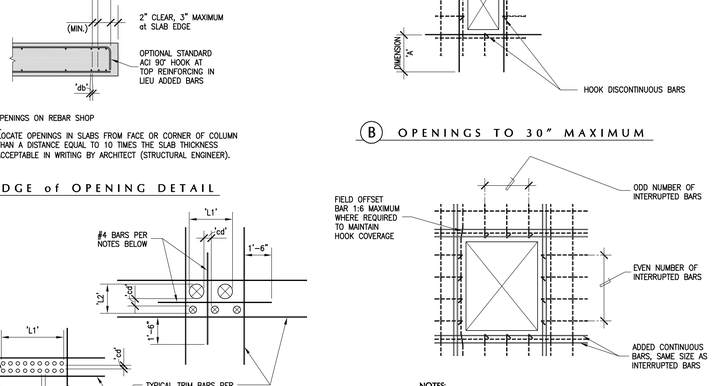

NOTES:

1. WHERE EVEN NUMBER OF BARS ARE INTERRUPTED, ADD HALF THE NUMBER OF EVEN BARS TO EACH SIDE OF OPENING. WHERE ODD NUMBER OF BARS ARE INTERRUPTED, ADD ONE–AND–A–HALF THE NUMBER OF EVEN BARS TO EACH SIDE OF OPENING.
2. PROVIDE REINFORCING WHERE SHOWN ON PLANS AT OPENINGS IN LIEU OF REINFORCING DETAILED ABOVE.

A INTERRUPTED BAR LAYOUT
(OPENINGS GREATER THAN 30")

NOTES:

1. LOCATE OPENINGS ON REBAR SHOP DRAWINGS.
2. DO NOT LOCATE OPENINGS IN SLABS FROM FACE OR CORNER OF COLUMN CLOSER THAN A DISTANCE EQUAL TO 10 TIMES THE SLAB THICKNESS UNLESS ACCEPTABLE IN WRITING BY ARCHITECT (STRUCTURAL ENGINEER).

D EDGE of OPENING DETAIL

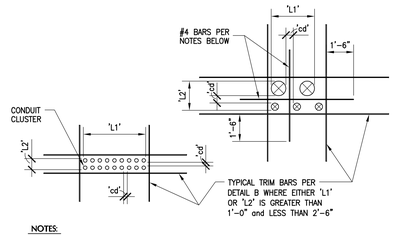

NOTES:

1. WHERE 'cd' (CLEAR DISTANCE) IS EQUAL TO OR GREATER THAN SLAB THICKNESS, PROVIDE TYPICAL CONTINUOUS SLAB REINFORCING BETWEEN OPENINGS.
2. WHERE 'cd' (CLEAR DISTANCE) IS LESS THAN SLAB THICKNESS and GREATER THAN OR EQUAL TO 4", PROVIDE (1) #4 BAR TOP and BOTTOM AS SHOWN ABOVE.

C OPENINGS for PIPES and CONDUITS

TYPICAL CONVENTIONAL REINFORCING at SLAB OPENINGS | 1

Bayley Construction
3730 S. Susan St.
Suite 200
Santa Ana, CA. 92704
CA. License 734880
Tel 714-540-8863
Fax 714-556-8863

Bayley Construction
8005 S.E. 28th St.
P.O. Box 9004
Mercer Island, WA. 98040
WA. License
BAYLEC034JC
Tel 206-621-8884
Fax 206-343-7728

BAYLEY CONSTRUCTION

Pacific Parking DESIGN
6 Venture, Suite 275 949.341.0066 t
Irvine, California 92618 949.341.0099 f

DLR Group WWCOT
Architecture Engineering Planning Interiors
4280 Latham Street, Suite H 951.682.0470 t
Riverside, California 92501 951.682.1801 f

REGISTERED PROFESSIONAL ENGINEER
DENNIS K. BASTIAN
No. 36614
Exp. 12/31/12
STRUCTURAL
STATE OF CALIFORNIA

Public Agency Submittal:
Issued for Bidding:
Issued for Construction:

Revisions:

09.15.2011	PERMIT SET

PHASE II:
FOX
ENTERTAINMENT
PLAZA:
PARKING GARAGE

3605 Market Street, Riverside, CA 92501

CITY of RIVERSIDE

CITY OF RIVERSIDE

3900 Main Street, Riverside, CA 92522

Phase:
Revised
PPD Project № 10-101

TYPICAL ELEVATED
CONCRETE REBAR
SLAB DETAILS

Issued Date: 05.02.2011
Drawn By: JT/MT/CG
Checked By: DKB

PS-2.3
Sheet №

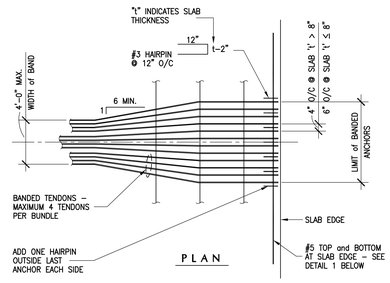

PLAN

TYPICAL BANDED TENDONS at SLAB EDGE (PLAN VIEW) | 14

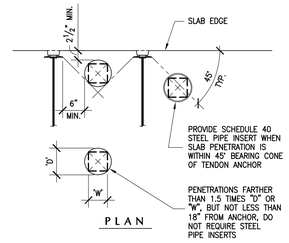

PLAN

NOTE:

ANY PENETRATIONS W/ DIMENSIONS GREATER THAN 12" MUST HAVE TRIM REINFORCING AS PER 1/PS-2.3

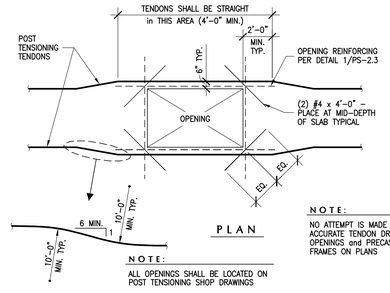

PLAN

NOTE:

ALL OPENINGS SHALL BE LOCATED ON POST TENSIONING SHOP DRAWINGS

NOTE:

NO ATTEMPT IS MADE TO SHOW ACCURATE TENDON DRAPES AROUND OPENINGS and PRECAST CONCRETE FRAMES ON PLANS

TYPICAL POST-TENSIONING AROUND SLAB OPENINGS | 4

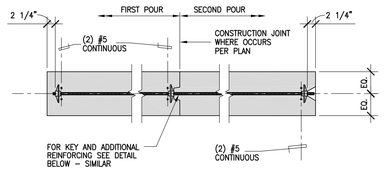

DEAD END | STRESSING JOINT | STRESSING END

NOTE:

DETERMINE LOCATION OF STRESSING POCKETS, JOINTS, OR CONTINUOUS CLOSURE STRIPS, IF NOT SHOWN ON DRAWINGS, AND SUBMIT TO ARCHITECT (STRUCTURAL ENGINEER) PRIOR TO PERFORMING WORK.

NOTES:

1. ANCHORAGE HARDWARE SHALL HAVE A CURRENT ICBO EVALUATION REPORT NUMBER.
2. AFTER STRESSING, TENDON HARDWARE SHALL BE COVERED WITH A RUST AND CORROSION PREVENTIVE COATING BEFORE FURTHER CONCRETE OR DRYPACK WORK.
3. TENDONS SHALL BE ADEQUATELY SUPPORTED TO MAINTAIN DESIGN PROFILE.
4. LOCATION OF STRESSING POCKETS, JOINTS OR CONTINUOUS CLOSURE STRIPS, IF NOT INDICATED ON THE DRAWINGS, SHALL BE DETERMINED BY THE GENERAL CONTRACTOR AND SUBMITTED TO THE ENGINEER PRIOR TO CONSTRUCTION.

DETAILS at STRESSING ANCHORS

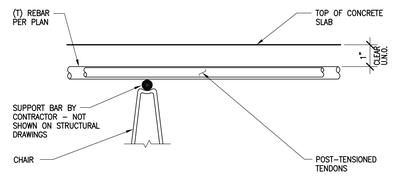

TYPICAL TENDON SUPPORT CHAIR DETAIL

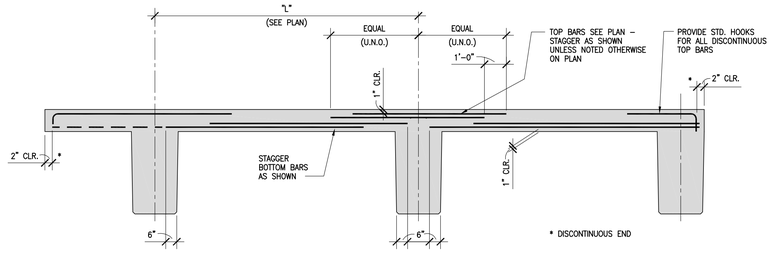

CANTILEVER END | TYPICAL BAY | END BAY

REINFORCING STEEL PROFILE

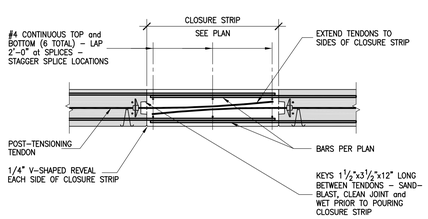

NOTE:

HOLD CASTING OF CLOSURE STRIP FOR 28 DAYS AFTER POST-TENSIONED SLABS and BEAMS EACH SIDE OF CLOSURE STRIP HAVE BEEN STRESSED.

TYPICAL SECTION thru CLOSURE STRIP

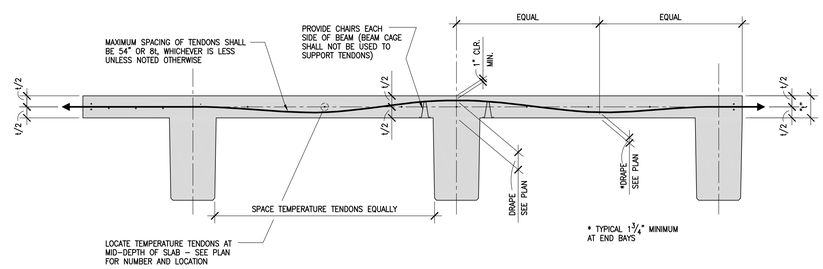

CANTILEVER END | TYPICAL BAY | END BAY

TENDON PROFILE

POST-TENSIONING NOTES:

1. CONTROL POINT OF POST TENSIONED DRAPES ARE MEASURED FROM CENTER OF TENDONS TO BOTTOM OF SLAB. WHERE CONTROL POINT OCCURS AT CHANGE IN SLAB THICKNESS, DRAPES ARE MEASURED TO BOTTOM OF THICKER SLAB.
2. PROVIDE EFFECTIVE FORCE AFTER LOSSES (Fe) AS INDICATED ON PLANS. PROVIDE PARABOLIC DRAPE EXCEPT AT CANTILEVER.

TYPICAL POST-TENSIONED CONCRETE SLAB PROFILE and DETAILS | 1

BAYLEY CONSTRUCTION

Bayley Construction
3730 S. Susan St.
Suite 200
Santa Ana, CA, 92704
CA. License 734880
Tel 714-540-8863
Fax 714-556-8863

Bayley Construction
8005 S.E. 28th St.
P.O. Box 9004
Mercer Island, WA. 98040
WA. License
BAYLEC034JC
Tel 206-621-8884
Fax 206-343-7728

Pacific Parking DESIGN
6 Venture, Suite 275 949.341.0066 t
Irvine, California 92618 949.341.0099 f

DLR Group WWCOT
Architecture Engineering Planning Interiors
4280 Latham Street, Suite H 951.682.0470 t
Riverside, California 92501 951.682.1801 f

REGISTERED PROFESSIONAL ENGINEER – DENNIS K. BASTIAN – No. 5041 – Exp. 12/31/13 – STRUCTURAL – STATE OF CALIFORNIA

Public Agency Submittal:
Issued for Bidding:
Issued for Construction:

Revisions:

09.15.2011 PERMIT SET

PHASE II:
FOX ENTERTAINMENT PLAZA:
PARKING GARAGE

3605 Market Street, Riverside, CA 92501

CITY of RIVERSIDE

CITY OF RIVERSIDE

3900 Main Street, Riverside, CA 92522

Phase:
Revised
PPD Project № 10-101

TYPICAL POST-TENSIONED CONCRETE SLAB DETAILS

Issued Date: 05.02.2011
Drawn By: JT/MT/CG
Checked By: DKB

PS-2.4

Sheet №

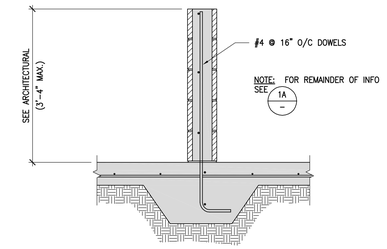

TYPICAL CMU PONY WALL | 5

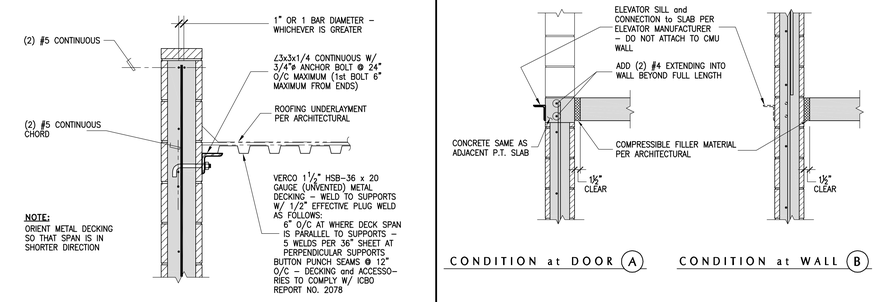

ROOF DECKING to CONCRETE BLOCK WALL | 9

TYPICAL CONCRETE WALL at ELEVATOR or STAIR ADJACENT to ELEVATED SLAB | 4

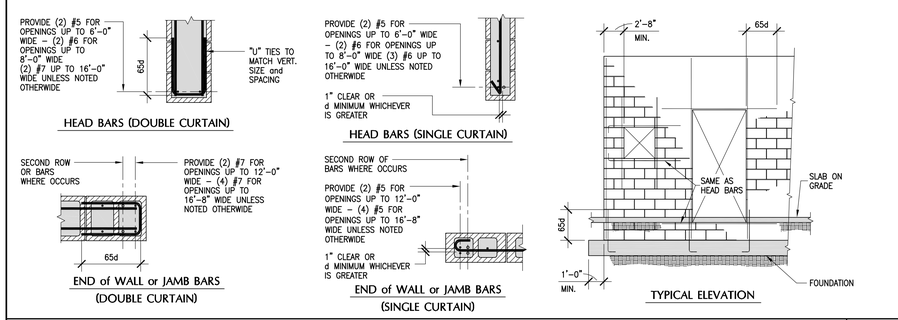

TYPICAL MASONRY WALL CONSTRUCTION at OPENINGS and WALL ENDS | 3

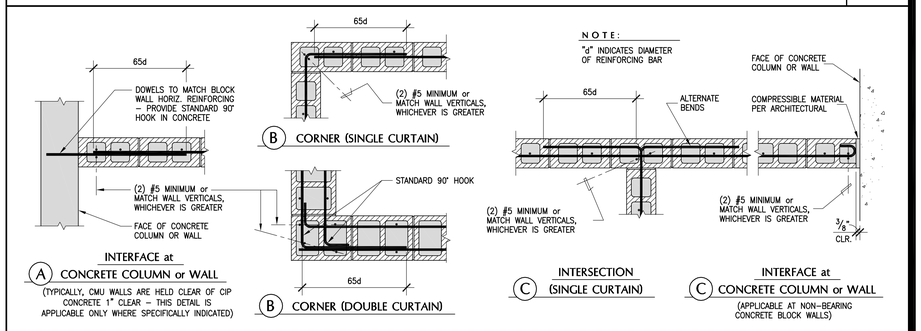

TYPICAL MASONRY WALL REINFORCING at INTERSECTIONS DETAIL | 2

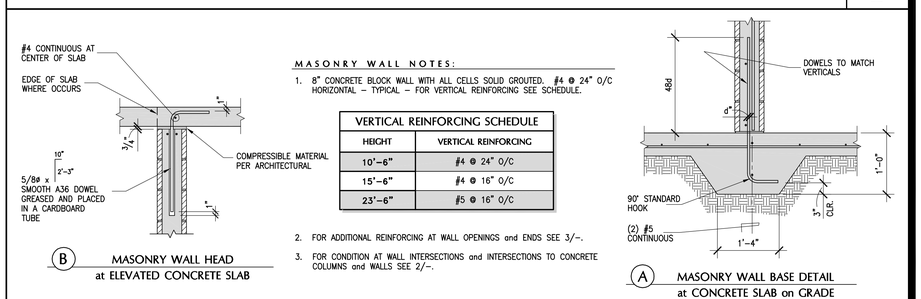

VERTICAL REINFORCING SCHEDULE	
HEIGHT	VERTICAL REINFORCING
10'-6"	#4 @ 24" O/C
15'-6"	#4 @ 16" O/C
23'-6"	#5 @ 16" O/C

TYPICAL MASONRY NON-BEARING, NON-SHEAR, WALL CONSTRUCTION DETAIL and SCHEDULE | 1

BAYLEY CONSTRUCTION

Bayley Construction
3730 S. Susan St.
Suite 200
Santa Ana, CA, 92704
CA. License 734880
Tel 714-540-8863
Fax 714-556-8863

Bayley Construction
8005 S.E. 28th St.
P.O. Box 9004
Mercer Island, WA. 98040
WA. License
BAYLEC034JC
Tel 206-621-8884
Fax 206-343-7728

Pacific Parking DESIGN

6 Venture, Suite 275 949.341.0066 t
Irvine, California 92618 949.341.0099 f

DLR Group WWCOT
Architecture Engineering Planning Interiors

4280 Latham Street, Suite H 951.682.0470 t
Riverside, California 92501 951.682.1801 f

REGISTERED PROFESSIONAL ENGINEER – DENNIS K. BASTIAN – No. 5641 – EXP. 12/31/13 – STRUCTURAL – STATE OF CALIFORNIA

Public Agency Submittal:
Issued for Bidding:
Issued for Construction:

Revisions:

A	09.15.2011	PERMIT SET

PHASE II: FOX ENTERTAINMENT PLAZA: PARKING GARAGE

3605 Market Street, Riverside, CA 92501

CITY of RIVERSIDE

CITY OF RIVERSIDE

3900 Main Street, Riverside, CA 92522

Phase:
Revised
PPD Project № 10-101

TYPICAL MASONRY DETAILS

Issued Date: 05.02.2011
Drawn By: JT/MT/CG
Checked By: DKB

PS-2.5

Sheet №

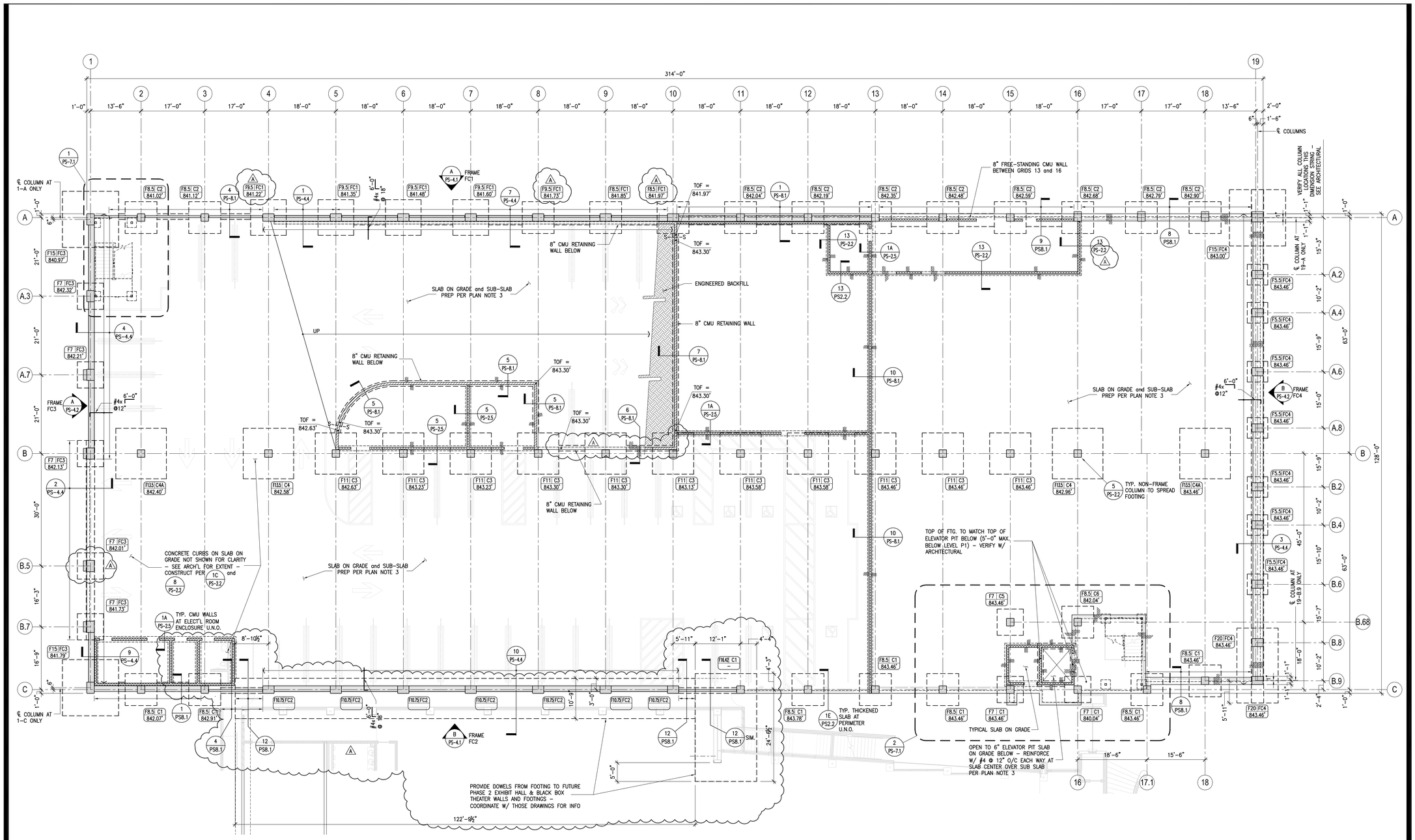

LEVEL P-1 PLAN NOTES

1. FOR GENERAL NOTES SEE PS-1.1
2. SEE ARCHITECTURAL FOR TOP OF CONCRETE SLAB ON GRADE ELEVATIONS, DEPRESSIONS, SLOPES, OPENINGS, CURBS, DRAINS, TRENCHES, SLAB EDGE LOCATIONS, WALL OVERALL DIMENSIONS and LOCATIONS OF OPENINGS NOT INDICATED ON STRUCTURAL DRAWINGS.
3. SLAB ON GRADE CONSTRUCTION: 5" NET THICK CONCRETE SLAB W/ #3 @ 18" O/C EACH WAY OVER SUBGRADE PREPARED ACCORDING to GEOTECHNICAL REPORT.
4. PROVIDE CONSTRUCTION JOINTS (C.J.'s) & WEAKENED PLANE JOINTS (W.P.'s) IN SLABS ON GRADE AT LOCATIONS SHOWN. SEE DETAIL 1/PS-2.2 FOR CONSTRUCTION. SUBMIT PROPOSED SLAB ON GRADE JOINT PATTERN TO ARCHITECT (STRUCTURAL ENGINEER).
5. TOP OF CONTINUOUS FOOTINGS TO MATCH TOP OF SPREAD FOOTINGS EACH END UNLESS SPECIFICALLY INDICATED OTHERWISE. WHERE TOP OF SPREAD FOOTINGS VARY EACH END OF CONTINUOUS FOOTINGS, SLOPE CONTINUOUS FOOTING AS NECESSARY MAINTAINING MAXIMUM 10% (10 VERTICAL TO 100 HORIZONTAL) MAXIMUM SLOPE. STEP FOOTINGS WHERE 10% MAXIMUM SLOPE IS EXCEEDED (UNLESS NOTED OTHERWISE ON FRAME ELEVATIONS) PER STEPPED FOOTING DETAIL.
6. S-----S — INDICATES STEPPED FOOTING SYMBOL LOCATING STEP AT TOP OF FOOTING. SEE DETAIL 4/PS-2.2 FOR CONSTRUCTION.
7. INDICATES SPREAD FOOTING MARK PER SCHEDULE THIS SHEET.
   "CX" INDICATES GRAVITY CONCRETE COLUMN MARK - SEE SCHEDULE and DETAILS PER A/PS-5.1. "FCX" INDICATES FRAME COLUMN MARK - SEE SCHEDULE and DETAILS PER A/PS-4.3
   FX | C2 / XXX.XX' — INDICATES TOP of SPREAD FOOTING ELEVATION - SEE NOTE 5.
8. INDICATES CONCRETE RETAINING BLOCK WALL. CONSTRUCT PER INDICATED DETAILS.
9. INDICATES CONCRETE NON-BEARING BLOCK WALL. CONSTRUCT PER 1/PS-2.5 UNLESS SHOWN OTHERWISE.
10. TOF — INDICATES TOP of FOOTING ELEVATION.
11. CENTER COLUMNS ON GRID LINES UNLESS SHOWN OTHERWISE. CENTER SPREAD FOOTINGS and CONTINUOUS FOOTINGS UNDER COLUMNS UNLESS SHOWN OTHERWISE. CENTER CONTINUOUS FOOTINGS UNDER WALLS UNLESS SHOWN OTHERWISE.

SPREAD FOOTING SCHEDULE

MARK	SIZE	THICKNESS	REINFORCING	REMARKS
F5.5	5'-6" SQ.	1'-3"	(6) #5 EACH WAY (B)	-
F7	7'-0" SQ.	1'-6"	(7) #6 EACH WAY (B)	-
F8.5	8'-6" SQ.	2'-0"	(10) #6 EACH WAY (B)	ADD (8) #5 EACH WAY (T) @ F8.5A
F9.5	9'-6" SQ.	2'-0"	(10) #7 EACH WAY (B)	ADD (8) #5 EACH WAY (T) @ F9.5A
F11	11'-0" SQ.	2'-6"	(10) #8 EACH WAY (B)	-
F13.5	13'-6" SQ.	3'-0"	(12) #9 EACH WAY (B)	-
F15	15'-0" SQ.	4'-0"	(10) #8 EACH WAY (T) (16) #8 EACH WAY (B)	-
F20	20'-0" x 11'-0"	4'-0"	(11) #7 LONGITUDINAL (T&B) (18) #7 TRANSVERSAL (T&B)	-
F10.75	126'-0" x 10'-9"	2'-0"	(10) #7 LONGITUDINAL (B) #6 @ 12" O/C TRANSVERSAL (T) #6 @ 24" O/C TRANSVERSAL (B)	-
F16.42	16'-5" x 28'-9"	2'-6"	(6) #5 LONGITUDINAL (T) (17) #8 LONGITUDINAL (B) #5 @ 11" O/C TRANSVERSAL (T) #8 @ 11" O/C TRANSVERSAL (B)	-

3/32"=1'-0"

Bayley Construction
3730 S. Susan St.
Suite 200
Santa Ana, CA, 92704
CA. License 734880
Tel 714-540-8863
Fax 714-556-8863

Bayley Construction
8005 S.E. 28th St.
P.O. Box 9004
Mercer Island, WA. 98040
WA. License
BAYLEC034JC
Tel 206-621-8884
Fax 206-343-7728

Pacific Parking DESIGN
6 Venture, Suite 275 949.341.0066 t
Irvine, California 92618 949.341.0099 f

DLR Group WWCOT
Architecture Engineering Planning Interiors
4280 Latham Street, Suite H 951.682.0470 t
Riverside, California 92501 951.682.1801 f

REGISTERED PROFESSIONAL ENGINEER DENNIS K. BASTIAN No. 3014 Exp. 12/31/13 STRUCTURAL STATE OF CALIFORNIA

Public Agency Submittal:
Issued for Bidding:
Issued for Construction:

Revisions:

1 09.15.2011 PERMIT SET

PHASE II: FOX ENTERTAINMENT PLAZA: PARKING GARAGE

3605 Market Street, Riverside, CA 92501

CITY of RIVERSIDE

3900 Main Street, Riverside, CA 92522

Phase:
Revised
PPD Project № 10-101

LEVEL P-1
FOUNDATION PLAN

Issued Date: 05.02.2011
Drawn By: JT/MT/CG
Checked By: DKB

PS-3.1
Sheet №

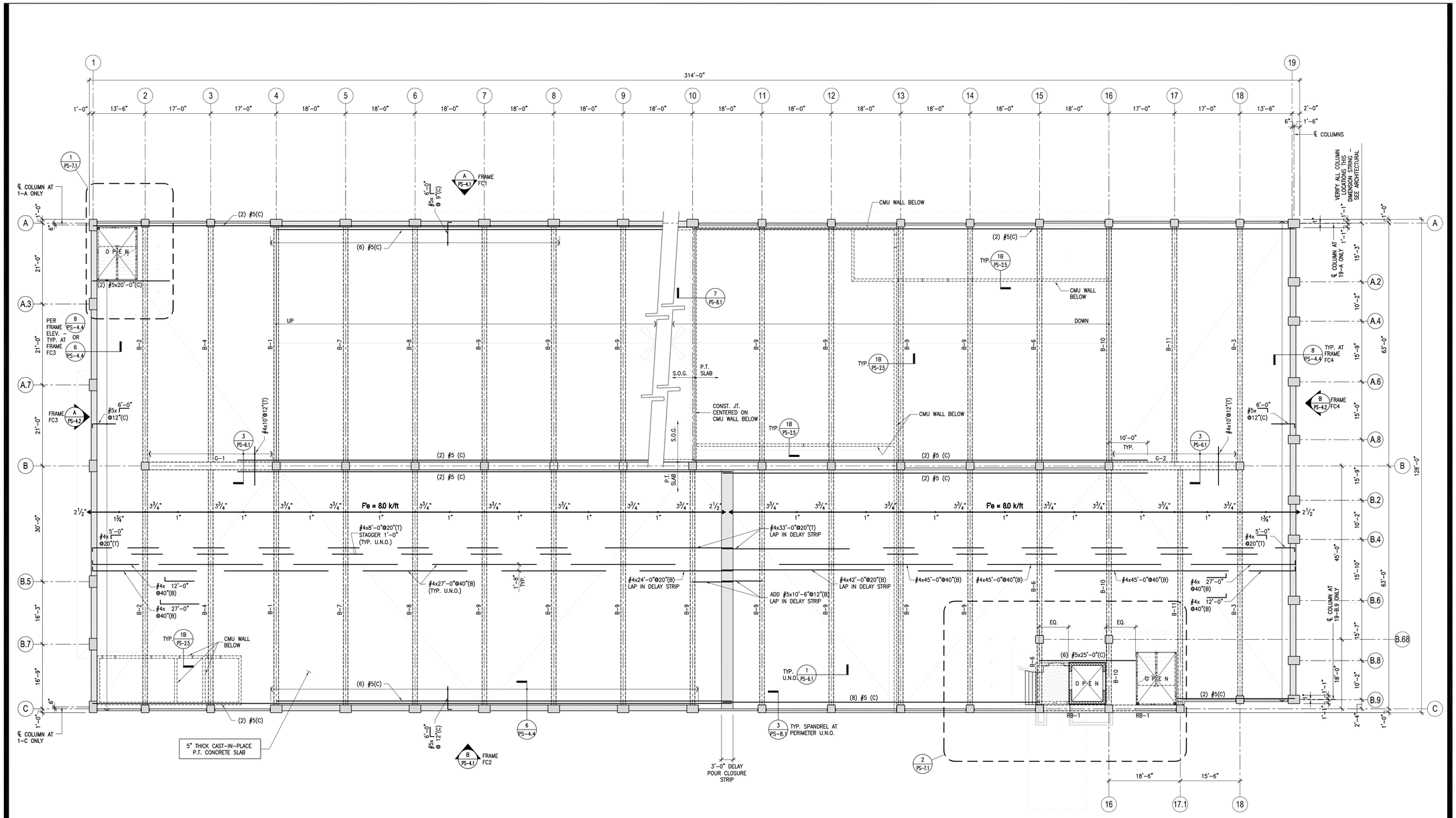

ELEVATED LEVEL PLAN NOTES

1. FOR REMAINDER of PLAN NOTES SEE SHEET PS-3.1
2. ELEVATED SLAB CONSTRUCTION: POST-TENSIONED CONCRETE SLAB with REINFORCING AS SHOWN. CONSTRUCTION DETAILS and BALANCE of REINFORCING PER 1/PS-2.4
3. B-X or G-X — INDICATES POST-TENSIONED CONCRETE BEAM OR GIRDER MARK – SEE ELEVATIONS and DETAILS ON PS-6-SERIES SHEETS – FOR TYP. SLEEVES IN P.T. BEAMS SEE 2/PS-6.1
4. #5x9'@12"(T)S
   - INDICATES BAR SIZE
   - INDICATES BAR LENGTH WHERE INDICATED
   - INDICATES BAR SPACING
   - "S" INDICATES STAGGER BARS PER DETAIL 1/PS-2.4 UNLESS NOTED OTHERWISE PER PLAN – STAGGER BARS ONLY WHERE INDICATED
   - INDICATES LOCATION OF BAR (T) INDICATES TOP; (B) BOTTOM; (C) CENTER
5. INDICATES BARS W/ ACI STANDARD 90° HOOK. LENGTHS INDICATED ON PLAN DO NOT INCLUDE HOOK.
6. INDICATES CONCRETE NON-BEARING BLOCK WALL. CONSTRUCTION DETAILS and BALANCE of REINFORCING PER XX/PS-X.X
7. PROVIDE OPENINGS IN ELEVATED CONCRETE SLAB UP TO 2'-6" SQUARE PER DETAIL 1/PS-2.3
8. PROVIDE CONSTRUCTION JOINTS IN ELEVATED CONCRETE SLAB PER DETAIL 1/PS-2.2

3/32"=1'-0"

Bayley Construction
3730 S. Susan St.
Suite 200
Santa Ana, CA. 92704
CA. License 734880
Tel 714-540-8863
Fax 714-556-8863

Bayley Construction
8005 S.E. 28th St.
P.O. Box 9004
Mercer Island, WA. 98040
WA. License
BAYLEC034JC
Tel 206-621-8884
Fax 206-343-7728

Pacific Parking DESIGN
6 Venture, Suite 275 949.341.0066 t
Irvine, California 92618 949.341.0099 f

DLR Group WWCOT
Architecture Engineering Planning Interiors
4280 Latham Street, Suite H 951.682.0470 t
Riverside, California 92501 951.682.1801 f

Public Agency Submittal:
Issued for Bidding:
Issued for Construction:

Revisions:

09.15.2011 PERMIT SET

PHASE II: FOX ENTERTAINMENT PLAZA: PARKING GARAGE

3605 Market Street, Riverside, CA 92501

CITY of RIVERSIDE

3900 Main Street, Riverside, CA 92522

Phase:
Revised
PPD Project № 10-101

LEVEL P-2
FRAMING PLAN

Issued Date: 05.02.2011
Drawn By: JT/MT/CG
Checked By: DKB

PS-3.2
Sheet №

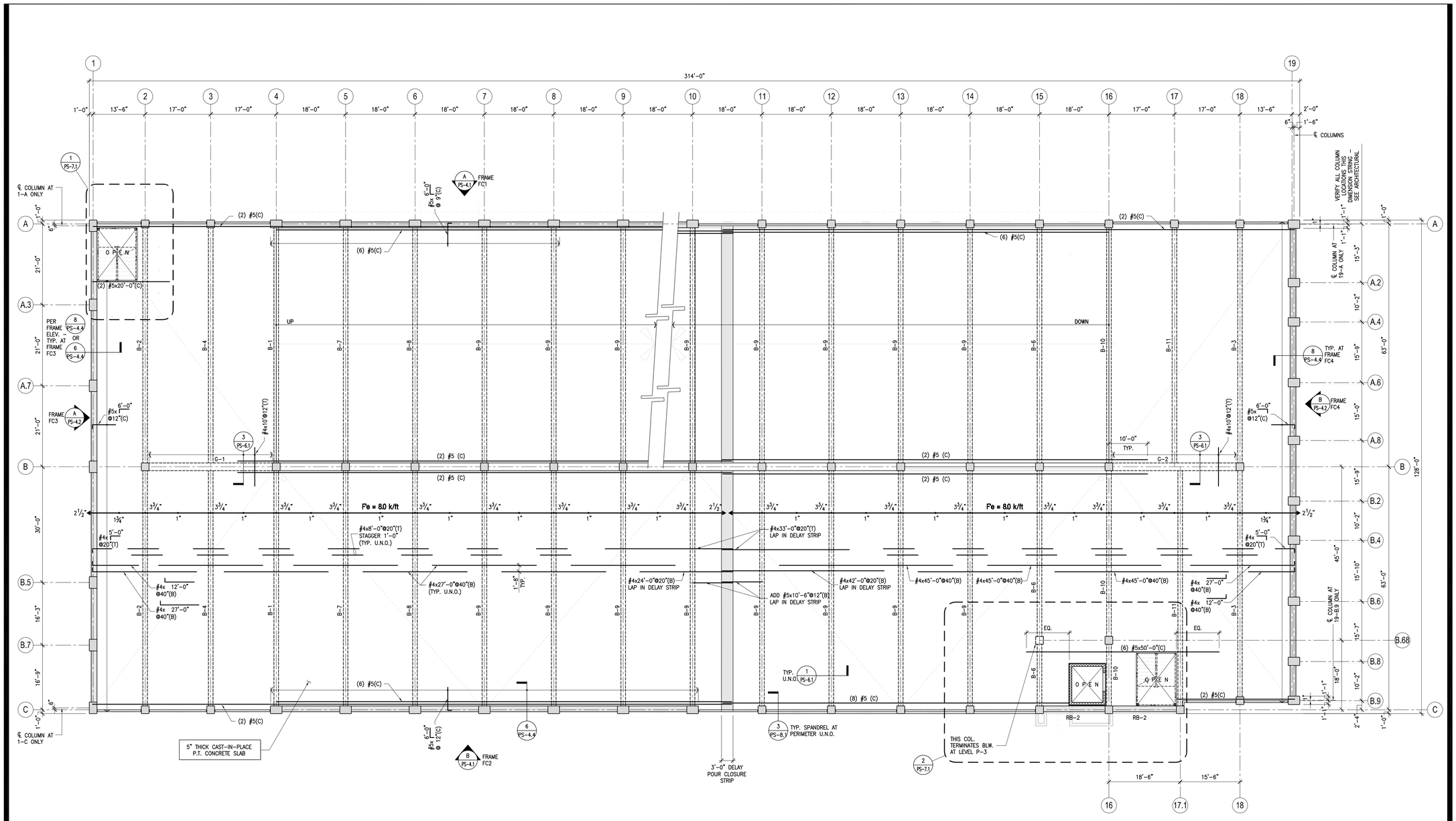

ELEVATED LEVEL PLAN NOTES

1. FOR REMAINDER of PLAN NOTES SEE SHEET PS-3.1
2. ELEVATED SLAB CONSTRUCTION: POST-TENSIONED CONCRETE SLAB with REINFORCING AS SHOWN. CONSTRUCTION DETAILS and BALANCE of REINFORCING PER 1/PS-2.4
3. B-X or G-X — INDICATES POST-TENSIONED CONCRETE BEAM OR GIRDER MARK - SEE ELEVATIONS and DETAILS ON PS-6-SERIES SHEETS - FOR TYP. SLEEVES IN P.T. BEAMS SEE 2/PS-6.1
4. #5x9'@12"(T)S
   - INDICATES BAR SIZE
   - INDICATES BAR LENGTH WHERE INDICATED
   - INDICATES BAR SPACING
   - "S" INDICATES STAGGER BARS PER DETAIL 1/PS-2.4 UNLESS NOTED OTHERWISE PER PLAN - STAGGER BARS ONLY WHERE INDICATED
   - INDICATES LOCATION OF BAR (T) INDICATES TOP; (B) BOTTOM; (C) CENTER
5. INDICATES BARS W/ ACI STANDARD 90° HOOK. LENGTHS INDICATED ON PLAN DO NOT INCLUDE HOOK.
6. INDICATES CONCRETE NON-BEARING BLOCK WALL. CONSTRUCTION DETAILS and BALANCE of REINFORCING PER XX/PS-X.X
7. PROVIDE OPENINGS IN ELEVATED CONCRETE SLAB UP TO 2'-6" SQUARE PER DETAIL 1/PS-2.3
8. PROVIDE CONSTRUCTION JOINTS IN ELEVATED CONCRETE SLAB PER DETAIL 1/PS-2.2

3/32"=1'-0"

Bayley Construction
3730 S. Susan St.
Suite 200
Santa Ana, CA, 92704
CA. License 734880
Tel 714-540-8863
Fax 714-556-8863

Bayley Construction
8005 S.E. 28th St.
P.O. Box 9004
Mercer Island, WA. 98040
WA. License
BAYLEC034JC
Tel 206-621-8884
Fax 206-343-7728

BAYLEY CONSTRUCTION

Pacific Parking DESIGN
6 Venture, Suite 275 949.341.0066 t
Irvine, California 92618 949.341.0099 f

DLR Group WWCOT
Architecture Engineering Planning Interiors
4280 Latham Street, Suite H 951.682.0470 t
Riverside, California 92501 951.682.1801 f

REGISTERED PROFESSIONAL ENGINEER DENNIS K. BAYLEY No. 5641 Exp. 3/31/13 STRUCTURAL STATE OF CALIFORNIA

Public Agency Submittal:
Issued for Bidding:
Issued for Construction:

#	Revisions:	
A	09.15.2011	PERMIT SET

PHASE II: FOX ENTERTAINMENT PLAZA: PARKING GARAGE

3605 Market Street, Riverside, CA 92501

CITY of RIVERSIDE

CITY OF RIVERSIDE

3900 Main Street, Riverside, CA 92522

Phase:
Revised
PPD Project № 10-101

LEVEL P-3
FRAMING PLAN

Issued Date: 05.02.2011
Drawn By: JT/MT/CG
Checked By: DKB

PS-3.3
Sheet №

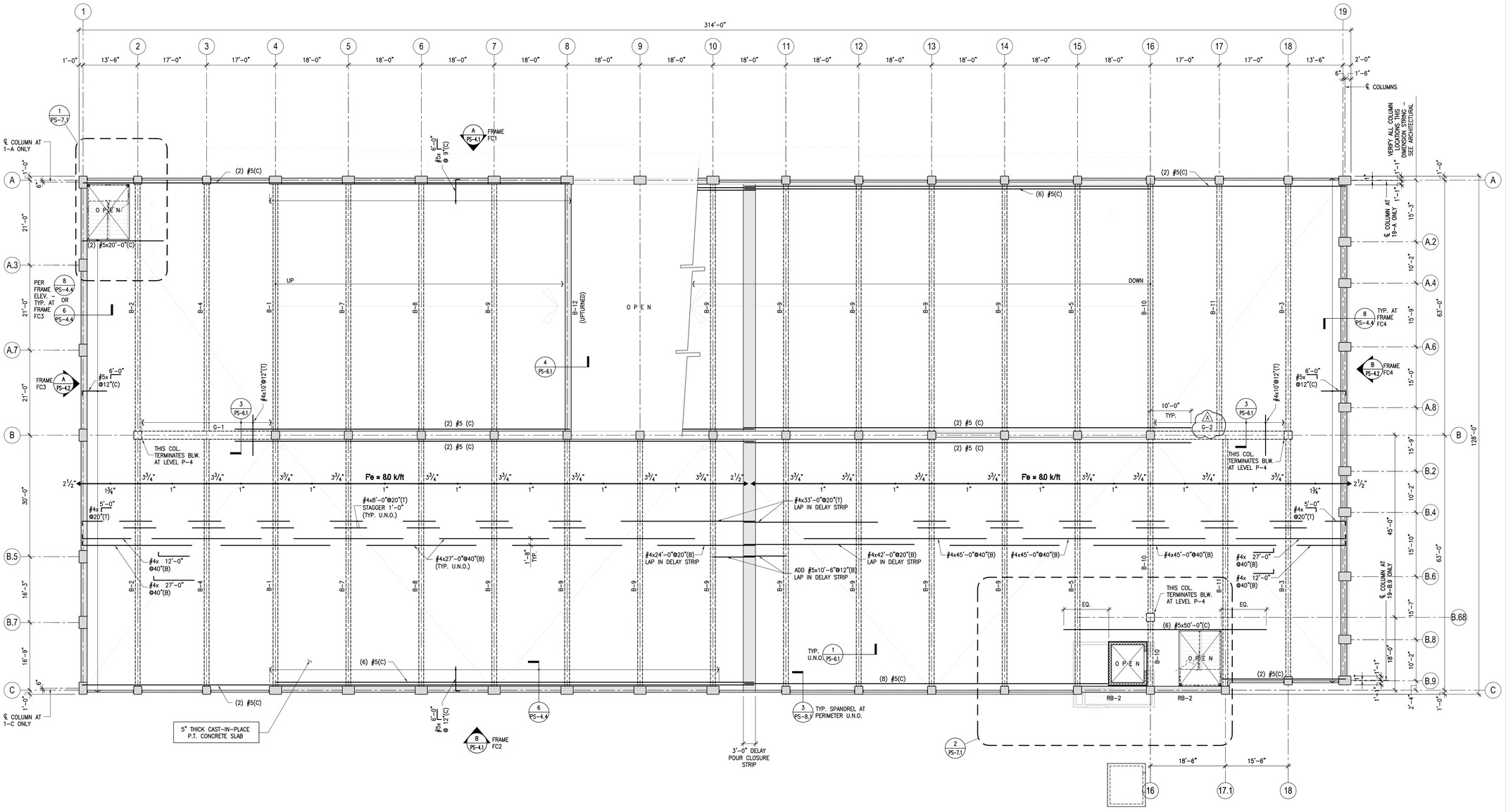

ELEVATED LEVEL PLAN NOTES

1. FOR REMAINDER of PLAN NOTES SEE SHEET PS-3.1
2. ELEVATED SLAB CONSTRUCTION: POST-TENSIONED CONCRETE SLAB with REINFORCING AS SHOWN. CONSTRUCTION DETAILS and BALANCE of REINFORCING PER 1/PS-2.4
3. B-X or G-X — INDICATES POST-TENSIONED CONCRETE BEAM OR GIRDER MARK - SEE ELEVATIONS and DETAILS ON PS-6-SERIES SHEETS - FOR TYP. SLEEVES IN P.T. BEAMS SEE 2/PS-6.1
4. #5x9'@12"(T)S
   - INDICATES BAR SIZE
   - INDICATES BAR LENGTH WHERE INDICATED
   - INDICATES BAR SPACING
   - "S" INDICATES STAGGER BARS PER DETAIL 1/PS-2.4 UNLESS NOTED OTHERWISE PER PLAN - STAGGER BARS ONLY WHERE INDICATED
   - INDICATES LOCATION OF BAR (T) INDICATES TOP; (B) BOTTOM; (C) CENTER
5. INDICATES BARS W/ ACI STANDARD 90° HOOK. LENGTHS INDICATED ON PLAN DO NOT INCLUDE HOOK.
6. INDICATES CONCRETE NON-BEARING BLOCK WALL. CONSTRUCTION DETAILS and BALANCE of REINFORCING PER XX/PS-X.X
7. PROVIDE OPENINGS IN ELEVATED CONCRETE SLAB UP TO 2'-6" SQUARE PER DETAIL 1/PS-2.3
8. PROVIDE CONSTRUCTION JOINTS IN ELEVATED CONCRETE SLAB PER DETAIL 1/PS-2.2

3/32"=1'-0"

Bayley Construction
3730 S. Susan St.
Suite 200
Santa Ana, CA, 92704
CA. License 734880
Tel 714-540-8863
Fax 714-556-8863

Bayley Construction
8005 S.E. 28th St.
P.O. Box 9004
Mercer Island, WA. 98040
WA. License
BAYLEC034JC
Tel 206-621-8884
Fax 206-343-7728

BAYLEY CONSTRUCTION

Pacific Parking DESIGN
6 Venture, Suite 275 949.341.0066 t
Irvine, California 92618 949.341.0099 f

DLR Group WWCOT
Architecture Engineering Planning Interiors
4280 Latham Street, Suite H 951.682.0470 t
Riverside, California 92501 951.682.1801 f

REGISTERED PROFESSIONAL ENGINEER DENNIS K. BAYLEY No. 3014 Exp. 12/31/13 STRUCTURAL STATE OF CALIFORNIA

Public Agency Submittal:
Issued for Bidding:
Issued for Construction:

Revisions:

1	09.15.2011	PERMIT SET

PHASE II: FOX ENTERTAINMENT PLAZA: PARKING GARAGE

3605 Market Street, Riverside, CA 92501

CITY of RIVERSIDE

3900 Main Street, Riverside, CA 92522

Phase:
Revised
PPD Project № 10-101

LEVEL P-4 FRAMING PLAN

Issued Date: 05.02.2011
Drawn By: JT/MT/CG
Checked By: DKB

PS-3.4

Sheet №

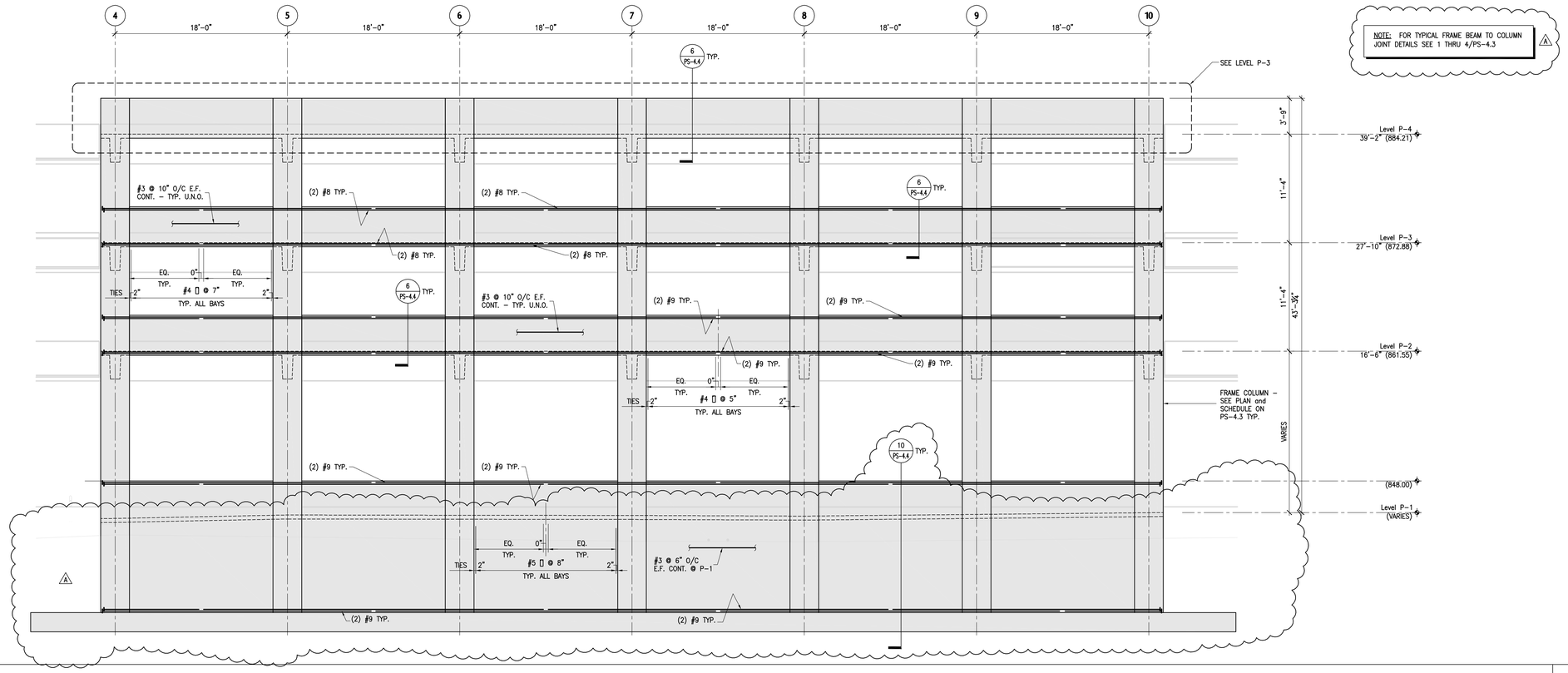

CONCRETE FRAME FC2 ELEVATION ALONG GRID C

B

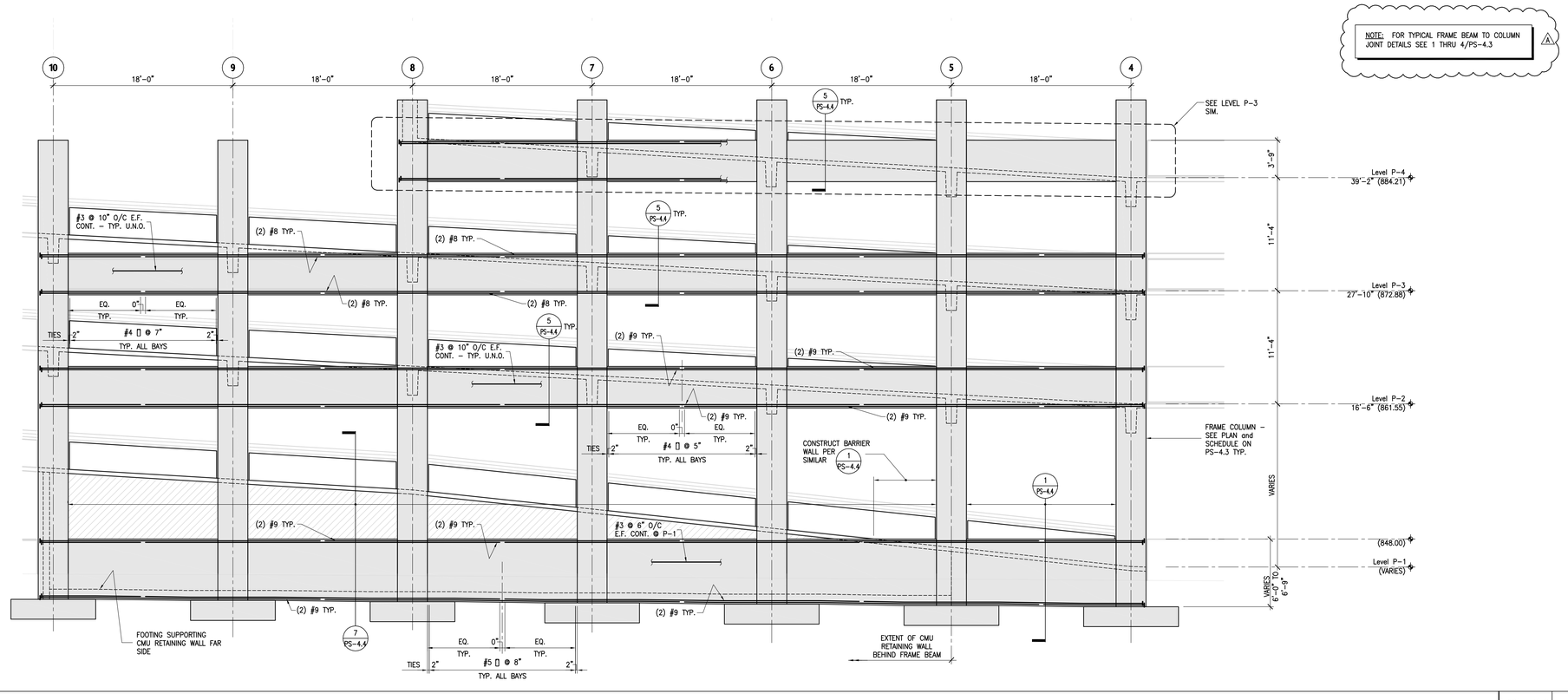

CONCRETE FRAME FC1 ELEVATION ALONG GRID A

3/16" = 1'-0" TYP. U.N.O.

A

Bayley Construction
3730 S. Susan St.
Suite 200
Santa Ana, CA, 92704
CA. License 734880
Tel 714-540-8863
Fax 714-556-8863

Bayley Construction
8005 S.E. 28th St.
P.O. Box 9004
Mercer Island, WA. 98040
WA. License
BAYLEC034JC
Tel 206-621-8884
Fax 206-343-7728

BAYLEY CONSTRUCTION

Pacific Parking DESIGN
6 Venture, Suite 275 949.341.0066 t
Irvine, California 92618 949.341.0099 f

DLR Group WWCOT
Architecture Engineering Planning Interiors
4280 Latham Street, Suite H 951.682.0470 t
Riverside, California 92501 951.682.1801 f

REGISTERED PROFESSIONAL ENGINEER
DENNIS K. BASTIAN
No. 5641
Exp. 12/31/13
STRUCTURAL
STATE OF CALIFORNIA

Public Agency Submittal:
Issued for Bidding:
Issued for Construction:

Revisions:

A 09.15.2011 PERMIT SET

PHASE II:
FOX
ENTERTAINMENT
PLAZA:
PARKING GARAGE

3605 Market Street, Riverside, CA 92501

CITY of RIVERSIDE

CITY OF RIVERSIDE

3900 Main Street, Riverside, CA 92522

Phase:
Revised
PPD Project № 10-101

EAST-WEST
RUNNING CONCRETE
FRAME ELEVATIONS

Issued Date: 05.02.2011
Drawn By: JT/MT/CG
Checked By: DKB

PS-4.1

Sheet №

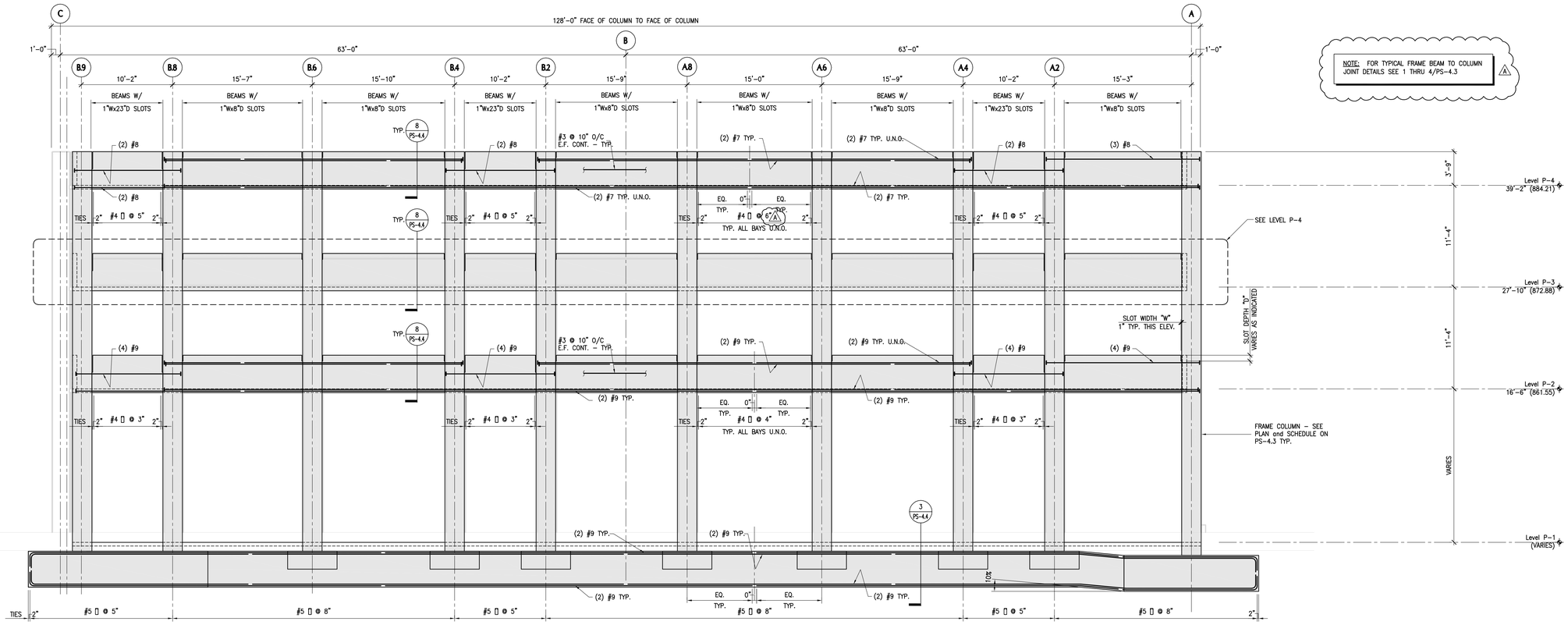

CONCRETE FRAME FC4 ELEVATION ALONG GRID 19 | B

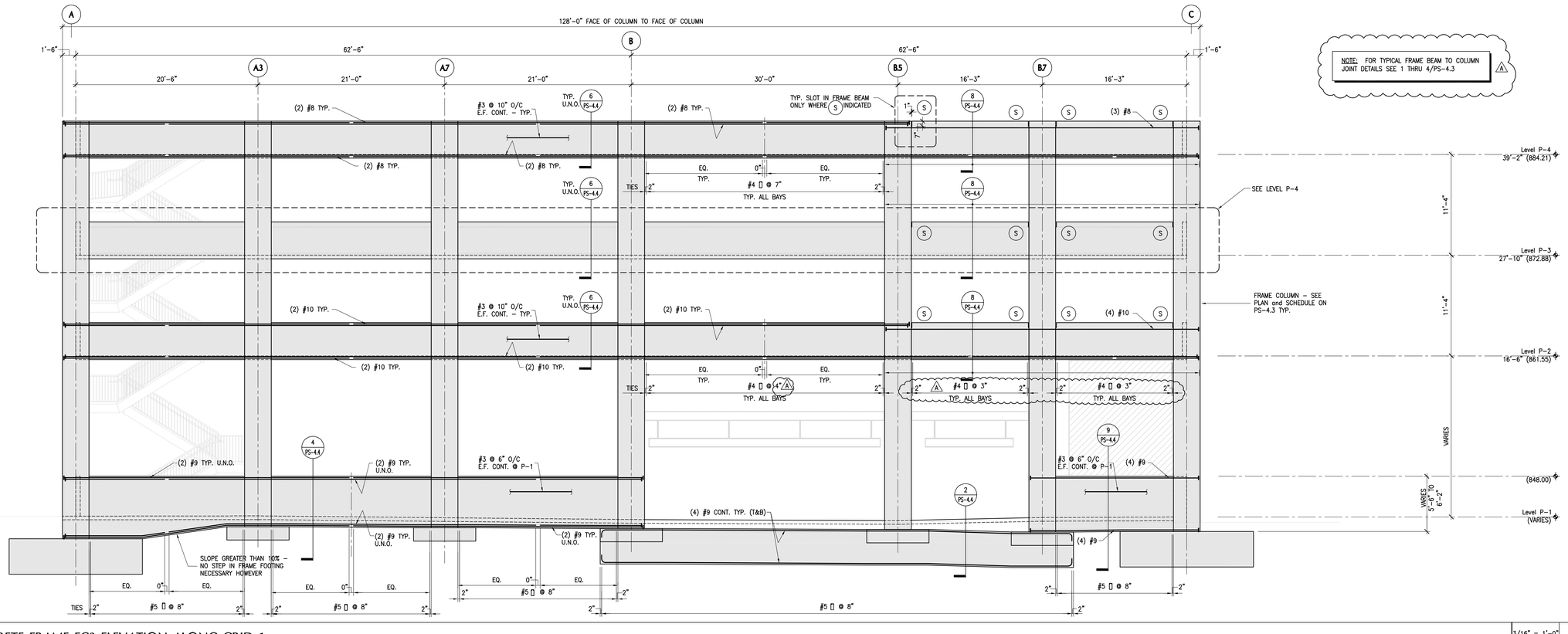

CONCRETE FRAME FC3 ELEVATION ALONG GRID 1 | 3/16" = 1'-0" TYP. U.N.O. | A

Bayley Construction
3730 S. Susan St.
Suite 200
Santa Ana, CA, 92704
CA. License 734880
Tel 714-540-8863
Fax 714-556-8863

Bayley Construction
8005 S.E. 28th St.
P.O. Box 9004
Mercer Island, WA, 98040
WA. License
BAYLECO34JC
Tel 206-621-8884
Fax 206-343-7728

BAYLEY CONSTRUCTION

Pacific Parking DESIGN
6 Venture, Suite 275 949.341.0066 t
Irvine, California 92618 949.341.0099 f

DLR Group WWCOT
Architecture Engineering Planning Interiors
4280 Latham Street, Suite H 951.682.0470 t
Riverside, California 92501 951.682.1801 f

REGISTERED PROFESSIONAL ENGINEER DENNIS K. BAYLEY No. 5641 Exp. 12/31/13 STRUCTURAL STATE OF CALIFORNIA

Public Agency Submittal:
Issued for Bidding:
Issued for Construction:

Revisions:

A	09.15.2011	PERMIT SET

PHASE II:
FOX
ENTERTAINMENT
PLAZA:
PARKING GARAGE

3605 Market Street, Riverside, CA 92501

CITY of RIVERSIDE

CITY OF RIVERSIDE

3900 Main Street, Riverside, CA 92522

Phase:
Revised
PPD Project № 10-101

NORTH-SOUTH RUNNING CONCRETE FRAME ELEVATIONS

Issued Date: 05.02.2011
Drawn By: JT/MT/CG
Checked By: DKB

PS-4.2
Sheet №

CONTRACTOR NOTE:
(T) BAR LOCATIONS VARY WHERE JT. SLOTS OCCURS – SEE ELEVATIONS SHEET PS4-2 FOR ADDITIONAL INFO.

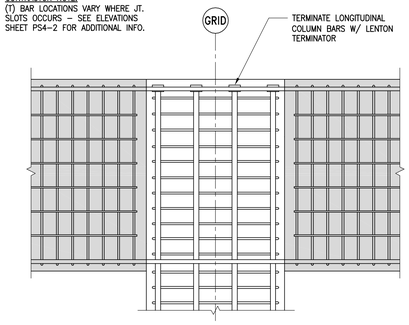

TOP CONNECTION
(INTERIOR)

DETAIL 4

CONTRACTOR NOTE:
(T) BAR LOCATIONS VARY WHERE JT. SLOTS OCCURS – SEE ELEVATIONS SHEET PS4-2 FOR ADDITIONAL INFO.

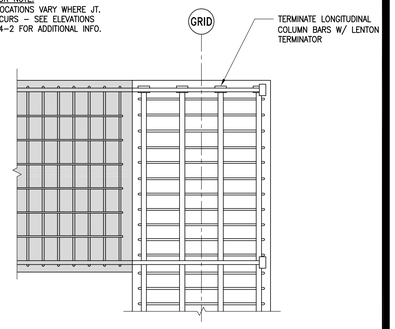

TOP CONNECTION
(END)

DETAIL 2

CONTRACTOR NOTE:
(T) BAR LOCATIONS VARY WHERE JT. SLOTS OCCURS – SEE ELEVATIONS SHEET PS4-2 FOR ADDITIONAL INFO.

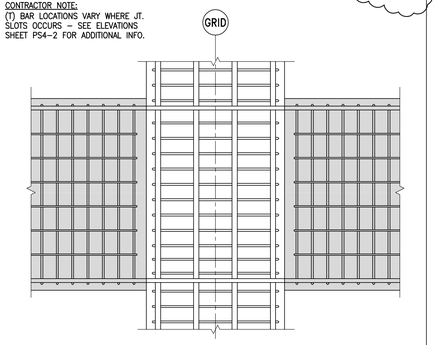

TYPICAL CONNECTION
(INTERIOR)

DETAIL 3

CONTRACTOR NOTE:
(T) BAR LOCATIONS VARY WHERE JT. SLOTS OCCURS – SEE ELEVATIONS SHEET PS4-2 FOR ADDITIONAL INFO.

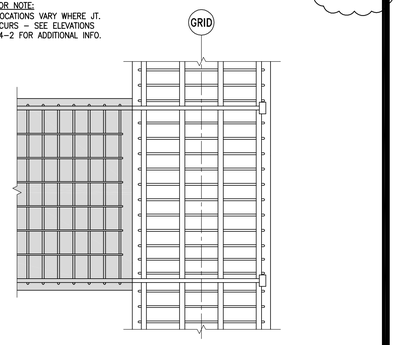

TYPICAL CONNECTION
(END)

DETAIL 1

NOTE: FOR REMAINDER OF INFO SEE SECTION A

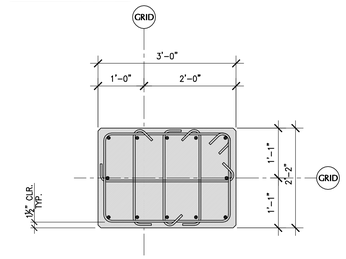

SECTION B
36" x 26"

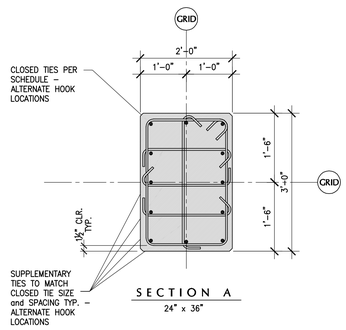

SECTION A
24" x 36"

CONCRETE COLUMN SCHEDULE NOTES:

1. SUPPLEMENTARY TIES ARE NOT INDICATED ON SCHEDULE – SEE SECTIONS FOR EXTENT OF SUPPLEMENTARY TIES.
2. FOR TYPICAL CONCRETE COLUMN CONSTRUCTION SEE DETAIL 1/PS-5.1, UNLESS OTHER DETAILS ARE SPECIFICALLY REFERENCED ON PLANS.
3. NO ATTEMPT IS MADE TO SHOW COLUMN ENCASEMENT OR GUARDS FOR VEHICLE IMPACT OR TO SHOW SLEEVES OR INSERTS FOR GUARDRAIL CABLES – SEE ARCHITECTURAL FOR DETAILS.
4. T-HEADS MAY BE SUBSTITUTED FOR HOOKS AT TOP OF COLUMNS AT CONTRACTOR'S OPTION.

FRAME COLUMN SCHEDULE

COLUMN MARK	FC4 REINFORCING	FC4 SIZE	FC4 TIES	FC4 SECTION	FC3 REINFORCING	FC3 SIZE	FC3 TIES	FC3 SECTION	FC2 REINFORCING	FC2 SIZE	FC2 TIES	FC2 SECTION	FC1 REINFORCING	FC1 SIZE	FC1 TIES	FC1 SECTION
SEE ARCH'L – T.O. COLUMN WHERE EXTENDS ABOVE TOP LEVEL																
LEVEL P-4																
SEE ARCH'L	(12) #8				(12) #8				(12) #8				(12) #8			
LEVEL P-3																
SEE ARCH'L	(12) #10	26" x 36"	#4 @ 3¼"	B	(12) #10	24" x 36"	#4 @ 4"	A	(12) #10	24" x 36"	#4 @ 4"	A	(12) #10 – EXTEND COL. BARS TO LVL. BELOW AT CONTRACTOR'S OPTION – TYP.	24" x 36"	#4 @ 4"	A
LEVEL P-2																
SEE ARCH'L																
LEVEL P-1																
SEE PLAN – T.O. FTG.																
COLUMN DETAIL	1/PS-5.1				1/PS-5.1				1/PS-5.1				1/PS-5.1			
REMARKS	–				–				–				–			

PROVIDE VERTICAL REINFORCING STEEL COMPLYING WITH NOTE 2 OF REINFORCING STEEL SECTION OF THE GENERAL NOTES.

FRAME COLUMN SCHEDULE and SECTIONS

A

BAYLEY CONSTRUCTION

Bayley Construction
3730 S. Susan St.
Suite 200
Santa Ana, CA. 92704
CA. License 734880
Tel 714-540-8863
Fax 714-556-8863

Bayley Construction
8005 S.E. 28th St.
P.O. Box 9004
Mercer Island, WA. 98040
WA. License
BAYLEC034JC
Tel 206-621-8884
Fax 206-343-7728

Pacific Parking DESIGN
6 Venture, Suite 275 949.341.0066 t
Irvine, California 92618 949.341.0099 f

DLR Group WWCOT
Architecture Engineering Planning Interiors
4280 Latham Street, Suite H 951.682.0470 t
Riverside, California 92501 951.682.1801 f

REGISTERED PROFESSIONAL ENGINEER – DENNIS K. BASTIAN – No. 36416 – Exp. 12/31/13 – STRUCTURAL – STATE OF CALIFORNIA

Public Agency Submittal:
Issued for Bidding:
Issued for Construction:

Revisions:

09.15.2011 PERMIT SET

PHASE II:
FOX ENTERTAINMENT PLAZA:
PARKING GARAGE

3605 Market Street, Riverside, CA 92501

CITY of RIVERSIDE

CITY OF RIVERSIDE

3900 Main Street, Riverside, CA 92522

Phase:
Revised
PPD Project № 10-101

CONCRETE FRAME COLUMN SCHEDULE and DETAILS

Issued Date: 05.02.2011
Drawn By: JT/MT/CG
Checked By: DKB

PS-4.3
Sheet №

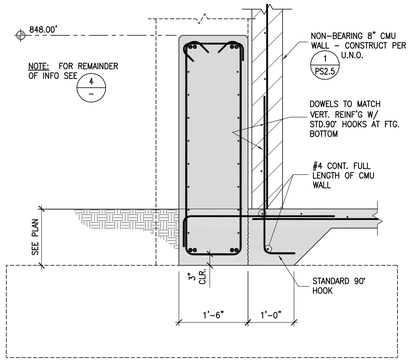

SECTION AT UPTURNED FRAME BEAM (GRIDS '1') | 9

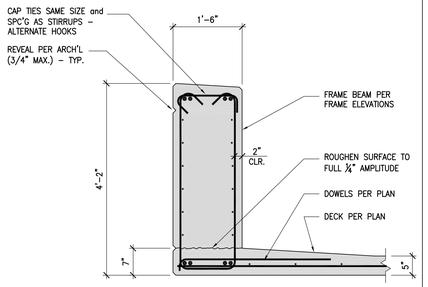

SECTION AT TYPICAL UPTURNED FRAME BEAM | 6

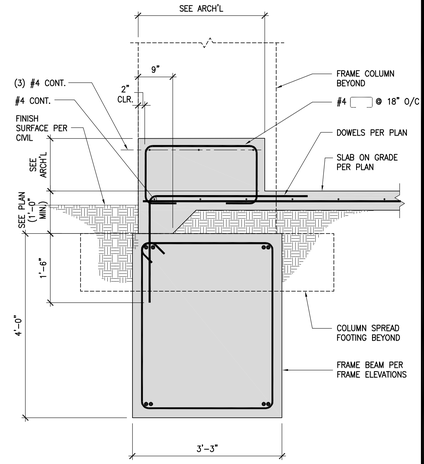

FRAME BEAM @ GRID LINE '19' | 3

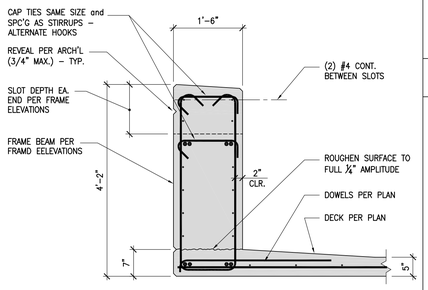

SECTION AT UPTURNED FRAME BEAM (GRID LINES '1' and '19') | 8

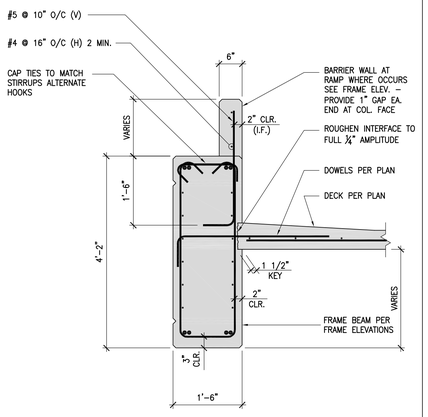

SECTION AT UPTURNED FRAME BEAM (GRID LINE 'A' RAMP) | 5

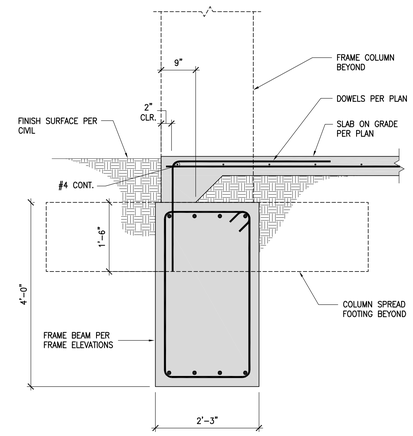

FRAME BEAM @ GRID LINE '1' | 2

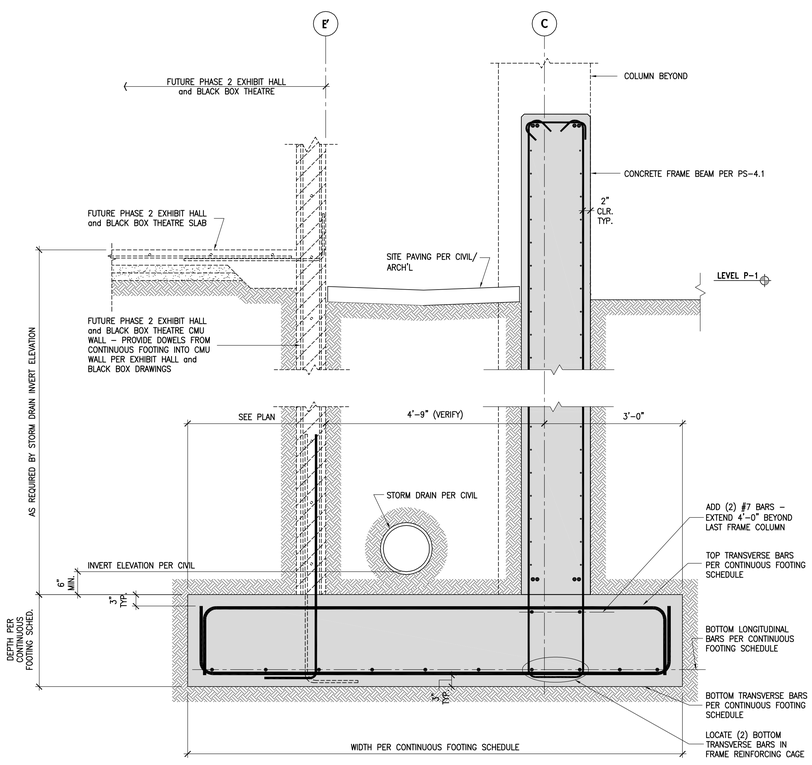

FOOTING and CONCRETE FRAME BEAM SECTION ALONG GRID C' | 10

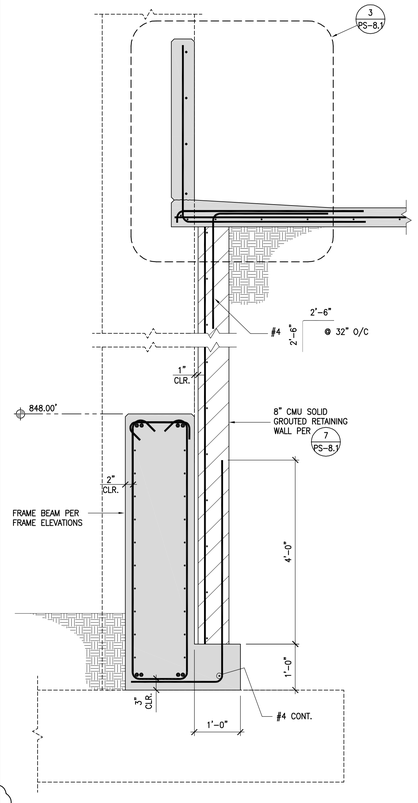

SECTION AT RAMP/UPTURNED FRAME BM. | 7

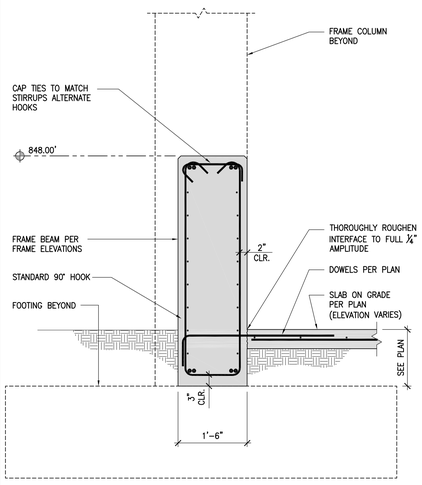

SECTION AT UPTURNED FRAME BEAM (GRIDS '1') | 4

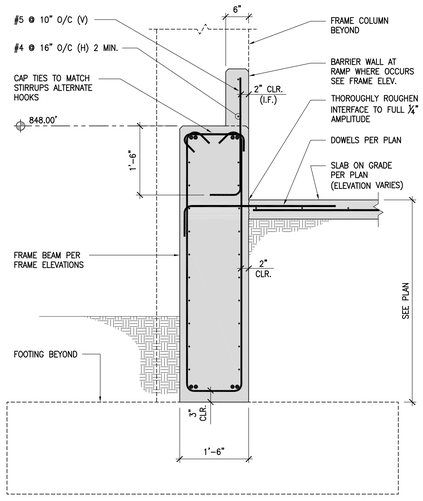

SECTION AT UPTURNED FRAME BEAM (GRID 'A' AT RAMP) | NO SCALE TYPICAL U.N.O. | 1

Bayley Construction
3730 S. Susan St.
Suite 200
Santa Ana, CA, 92704
CA. License 734880
Tel 714-540-8863
Fax 714-556-8863

Bayley Construction
8005 S.E. 28th St.
P.O. Box 9004
Mercer Island, WA. 98040
WA. License
BAYLEC034JC
Tel 206-621-8884
Fax 206-343-7728

BAYLEY CONSTRUCTION

Pacific Parking DESIGN
6 Venture, Suite 275 949.341.0066 t
Irvine, California 92618 949.341.0099 f

DLR Group WWCOT
Architecture Engineering Planning Interiors
4280 Latham Street, Suite H 951.682.0470 t
Riverside, California 92501 951.682.1801 f

REGISTERED PROFESSIONAL ENGINEER – DENNIS K. BAYLEY – No. 5641 – Exp. 12/31/13 – STRUCTURAL – STATE OF CALIFORNIA

Public Agency Submittal:
Issued for Bidding:
Issued for Construction:

Revisions:

09.15.2011 PERMIT SET

PHASE II: FOX ENTERTAINMENT PLAZA: PARKING GARAGE

3605 Market Street, Riverside, CA 92501

CITY of RIVERSIDE

CITY OF RIVERSIDE

3900 Main Street, Riverside, CA 92522

Phase:
Revised
PPD Project № 10-101

CONCRETE FRAME DETAILS

Issued Date: 05.02.2011
Drawn By: JT/MT/CG
Checked By: DKB

PS-4.4
Sheet №

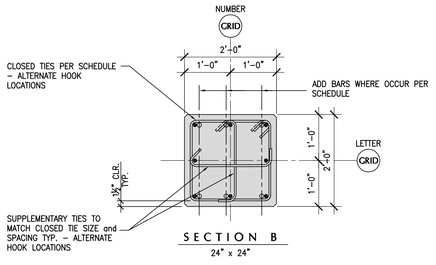

SECTION B

24" x 24"

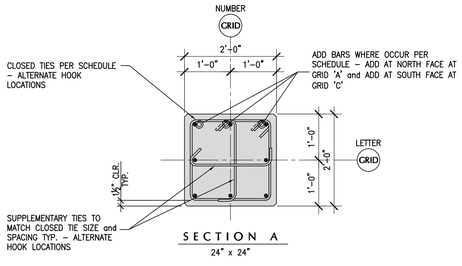

SECTION A

24" x 24"

CONCRETE COLUMN SCHEDULE NOTES:

1. SUPPLEMENTARY TIES ARE NOT INDICATED ON SCHEDULE – SEE SECTIONS FOR EXTENT OF SUPPLEMENTARY TIES.
2. FOR TYPICAL CONCRETE COLUMN CONSTRUCTION SEE DETAIL 1/–, UNLESS OTHER DETAILS ARE SPECIFICALLY REFERENCED ON PLANS.
3. NO ATTEMPT IS MADE TO SHOW COLUMN ENCASEMENT OR GUARDS FOR VEHICLE IMPACT OR TO SHOW SLEEVES OR INSERTS FOR GUARDRAIL CABLES – SEE ARCHITECTURAL FOR DETAILS.
4. T–HEADS MAY BE SUBSTITUTED FOR HOOKS AT TOP OF COLUMNS AT CONTRACTOR'S OPTION.

GRAVITY COLUMN SCHEDULE

COLUMN MARK	C6	C5	C4A	C4	C3	C2	C1
REINFORCING	(8) #8	(8) #8	(8) #8	(8) #8	(8) #9	(8) #8	(8) #8
					ADD (6) #9	ADD (3) #8	ADD (3) #8
							EXTEND COL. BARS TO VUL. BELOW AT CONTRACTOR'S OPTION – TYP.
SIZE	24" x 24"	24" x 24"	24" x 24"	24" x 24"	24" x 24"	24" x 24"	24" x 24"
TIES	#4 @ 3¾"	#4 @ 3¾"	#4 @ 3¾"	#4 @ 3¾"	#4 @ 3¾"	#4 @ 3¾"	#4 @ 3¾"
SECTION	A	A	A	A	B	A	A
							SEE ARCH'L.
							T.O. COLUMN WHERE EXTENDS ABOVE TOP LEVEL
							LEVEL P-4
							SEE ARCH'L.
							LEVEL P-3
							SEE ARCH'L.
							LEVEL P-2
							SEE ARCH'L.
							LEVEL P-1
							SEE PLAN
							T.O. FTG.
COLUMN DETAIL	1/–	1/–	1/–	1/–	1/–	1/–	1/–
REMARKS	–	–	–	–	–	–	–

PROVIDE VERTICAL REINFORCING STEEL COMPLYING WITH NOTE 2 OF REINFORCING STEEL SECTION OF THE GENERAL NOTES.

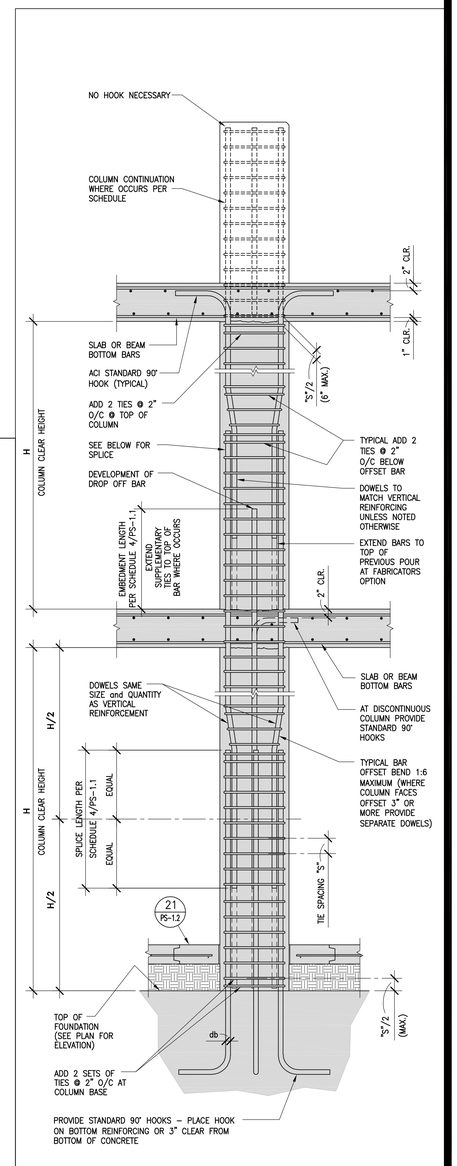

NOTES:

1. BUNDLED BARS OF MORE THAN 2 BARS INCLUDING SPLICING BAR IN SAME PLANE IS NOT PERMITTED.
2. DO NOT SPLICE MORE THAN ONE BAR IN A BUNDLE.

GRAVITY CONCRETE COLUMN SCHEDULE and SECTIONS

A

TYPICAL GRAVITY and FRAME COLUMN DETAIL

NO SCALE TYPICAL U.N.O.

1

Bayley Construction
3730 S. Susan St.
Suite 200
Santa Ana, CA, 92704
CA. License 734880
Tel 714-540-8863
Fax 714-556-8863

Bayley Construction
8005 S.E. 28th St.
P.O. Box 9004
Mercer Island, WA, 98040
WA. License
BAYLEC034JC
Tel 206-621-8884
Fax 206-343-7728

BAYLEY CONSTRUCTION

Pacific Parking DESIGN
6 Venture, Suite 275 949.341.0066 t
Irvine, California 92618 949.341.0099 f

DLR Group WWCOT
Architecture Engineering Planning Interiors
4280 Latham Street, Suite H 951.682.0470 t
Riverside, California 92501 951.682.1801 f

REGISTERED PROFESSIONAL ENGINEER
DENNIS K. BASTIAN
No. 3841 Exp. 12/31/13
STRUCTURAL
STATE OF CALIFORNIA

Public Agency Submittal:
Issued for Bidding:
Issued for Construction:

Revisions:

A	09.15.2011	PERMIT SET

PHASE II: FOX ENTERTAINMENT PLAZA: PARKING GARAGE

3605 Market Street, Riverside, CA 92501

CITY of RIVERSIDE

CITY OF RIVERSIDE

3900 Main Street, Riverside, CA 92522

Phase:
Revised
PPD Project № 10-101

GRAVITY COLUMN SCHEDULE and DETAILS

Issued Date: 05.02.2011
Drawn By: JT/MT/CG
Checked By: DKB

PS-5.1

Sheet №

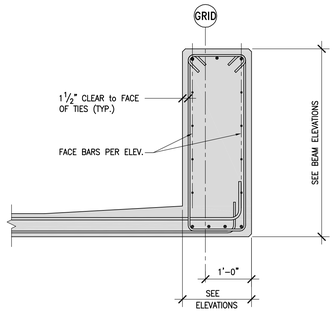

TYPICAL POST-TENSIONED UP-TURNED BEAM SECTION | 4

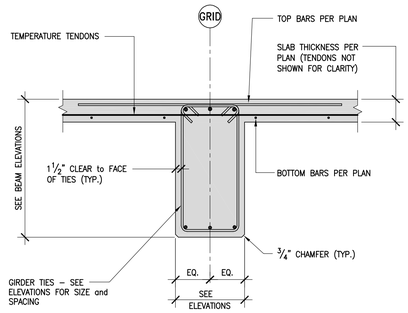

TYPICAL POST-TENSIONED GIRDER SECTION | 3

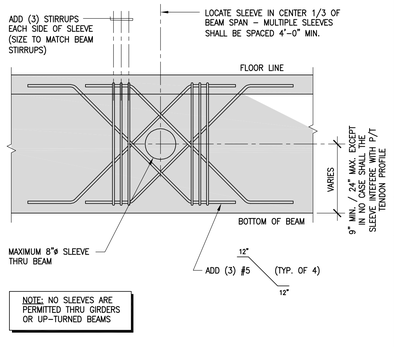

TYP. SLEEVES thru P-T BEAMS | 2

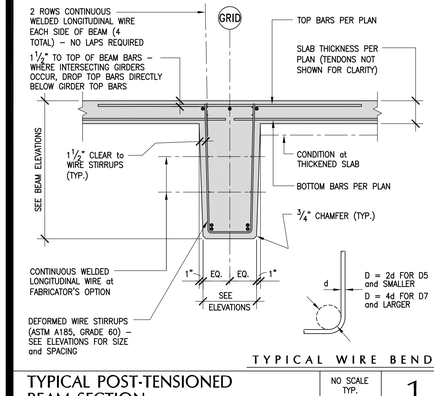

TYPICAL POST-TENSIONED BEAM SECTION | NO SCALE TYP. U.N.O. | 1

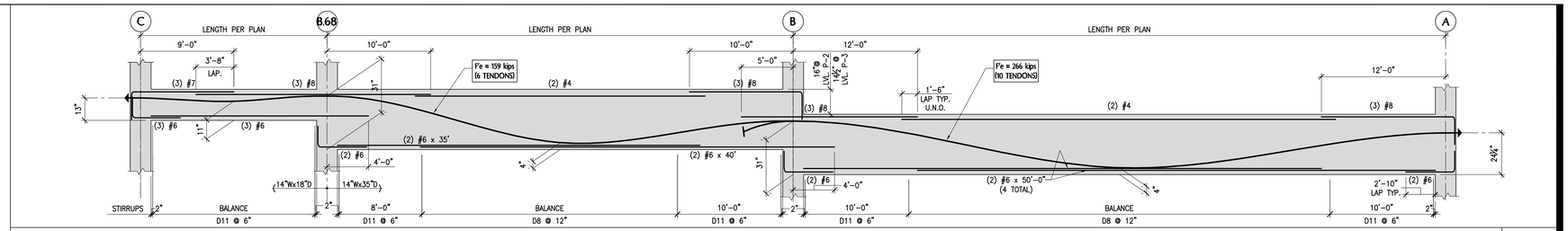

BEAM ELEVATION and REINFORCING (14" WIDE x 18" DEEP and 14" WIDE x 35" DEEP) | B-6

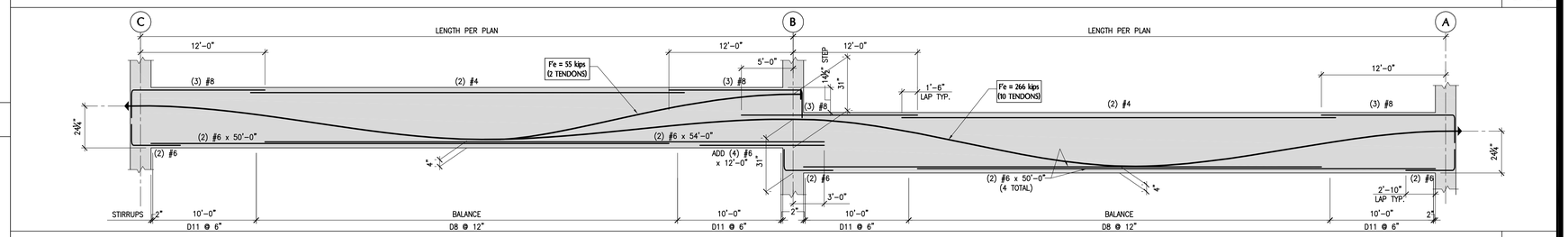

BEAM ELEVATION and REINFORCING (14" WIDE x 35" DEEP) | B-5

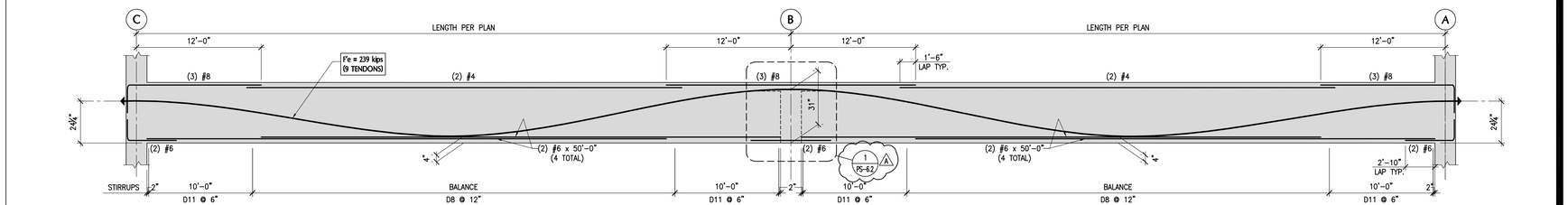

BEAM ELEVATION and REINFORCING (14" WIDE x 35" DEEP) | B-4

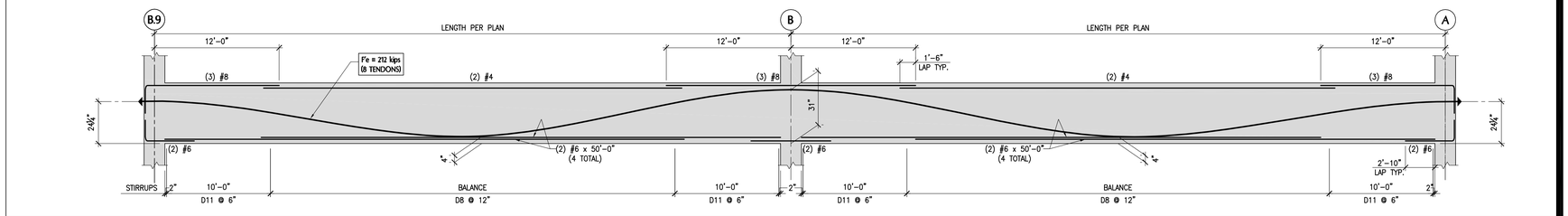

BEAM ELEVATION and REINFORCING (14" WIDE x 35" DEEP) | B-3

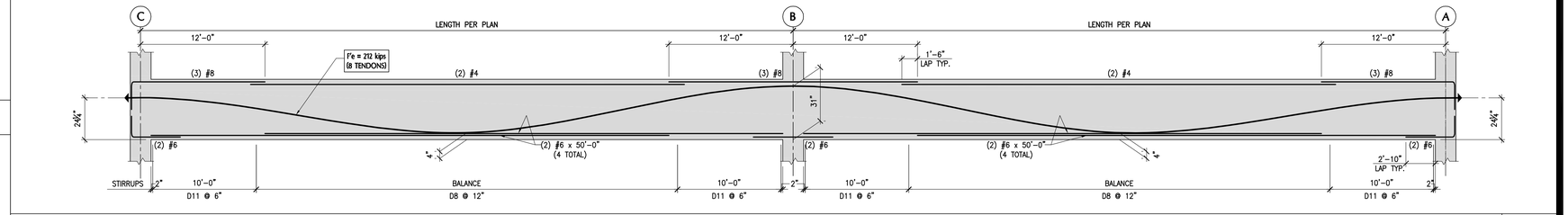

BEAM ELEVATION and REINFORCING (14" WIDE x 35" DEEP) | B-2

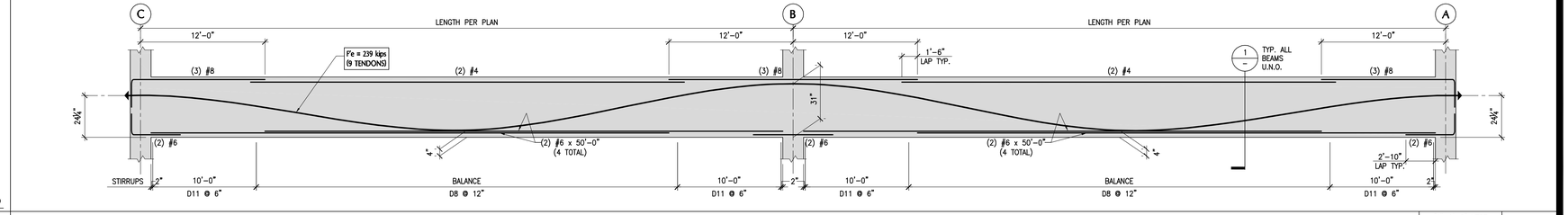

BEAM ELEVATION and REINFORCING (14" WIDE x 35" DEEP) | 3/8"=1'-0" VERT. 3/16"=1'-0" HORIZ. TYP. U.N.O. | B-1

BAYLEY CONSTRUCTION

Bayley Construction
3730 S. Susan St.
Suite 200
Santa Ana, CA, 92704
CA. License 734880
Tel 714-540-8863
Fax 714-556-8863

Bayley Construction
8005 S.E. 28th St.
P.O. Box 9004
Mercer Island, WA. 98040
WA. License
BAYLEC034JC
Tel 206-621-8884
Fax 206-343-7728

Pacific Parking DESIGN

6 Venture, Suite 275 949.341.0066 t
Irvine, California 92618 949.341.0099 f

DLR Group WWCOT
Architecture Engineering Planning Interiors

4280 Latham Street, Suite H 951.682.0470 t
Riverside, California 92501 951.682.1801 f

REGISTERED PROFESSIONAL ENGINEER DENNIS K. BAYLEY No. 50614 Exp. 12/31/13 STRUCTURAL STATE OF CALIFORNIA

Public Agency Submittal:
Issued for Bidding:
Issued for Construction:

#	Revisions:	
A	09.15.2011	PERMIT SET

PHASE II:
FOX ENTERTAINMENT PLAZA:
PARKING GARAGE

3605 Market Street, Riverside, CA 92501

CITY of RIVERSIDE

CITY OF RIVERSIDE

3900 Main Street, Riverside, CA 92522

Phase:
Revised
PPD Project № 10-101

BEAM ELEVATIONS

Issued Date: 05.02.2011
Drawn By: JT/MT/CG
Checked By: DKB

PS-6.1
Sheet №

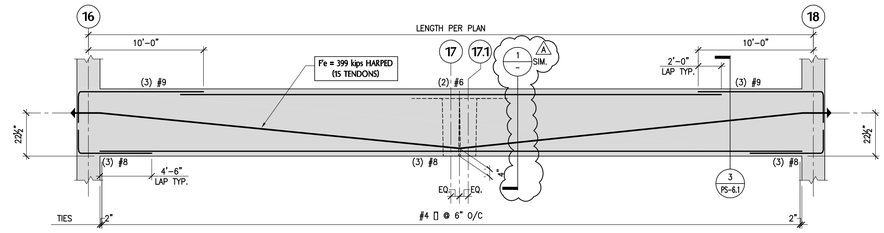

GIRDER ELEVATION and REINFORCING (24" WIDE x 35" DEEP) G-2

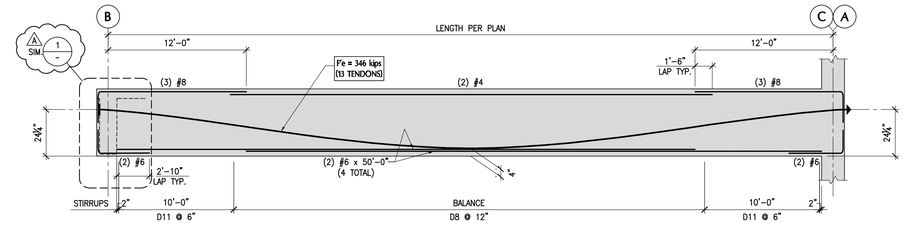

BEAM ELEVATION and REINFORCING (14" WIDE x 35" DEEP) B-11

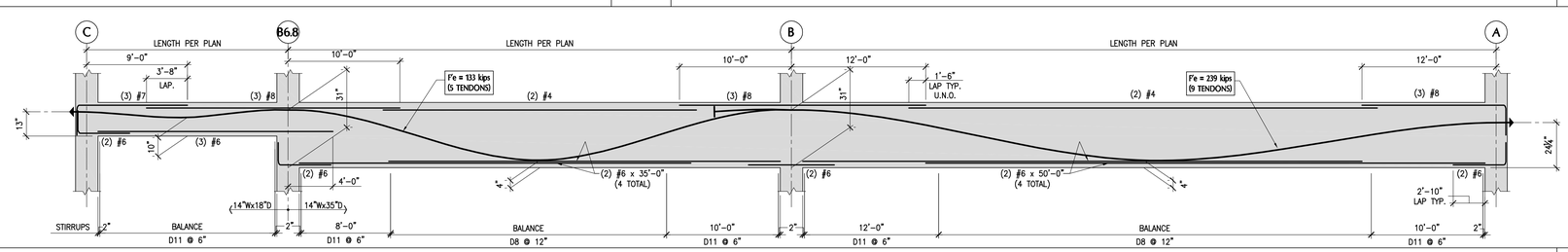

BEAM ELEVATION and REINFORCING (14" WIDE x 18" DEEP and 14" WIDE x 35" DEEP) B-10

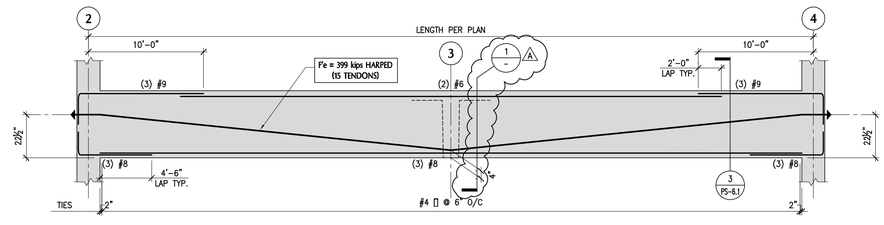

GIRDER ELEVATION and REINFORCING (24" WIDE x 35" DEEP) G-1

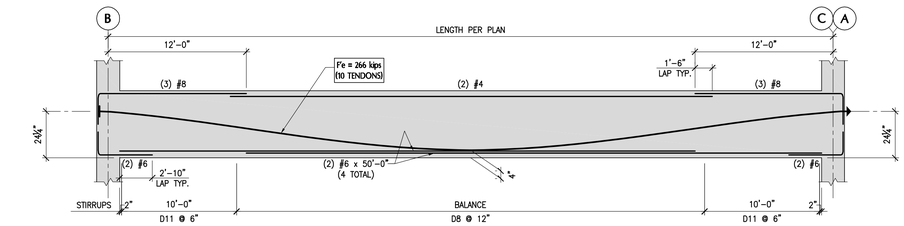

BEAM ELEVATION and REINFORCING (14" WIDE x 35" DEEP) B-9

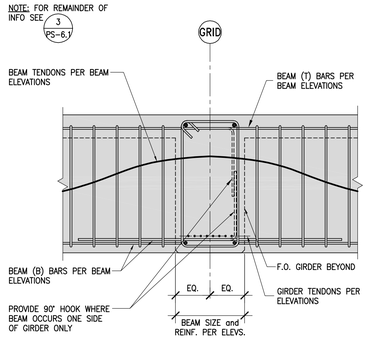

TYP. BEAM/GIRDER JOINT

NO SCALE TYP. U.N.O.

1

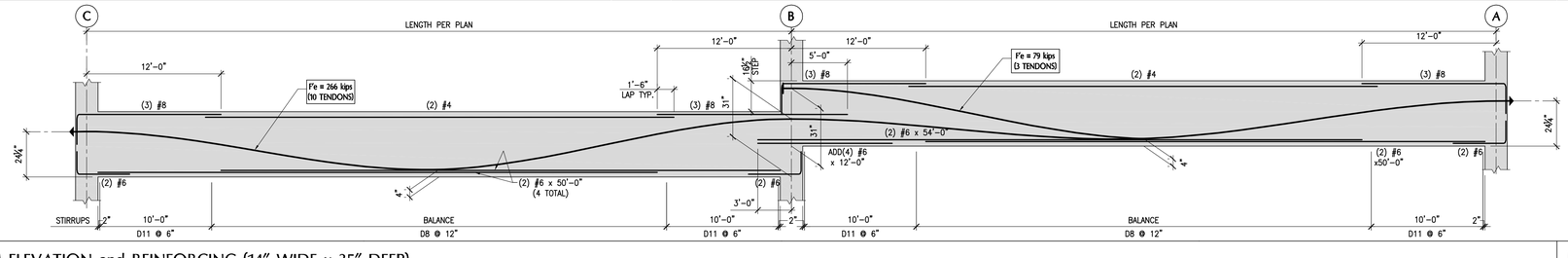

BEAM ELEVATION and REINFORCING (14" WIDE x 35" DEEP) B-8

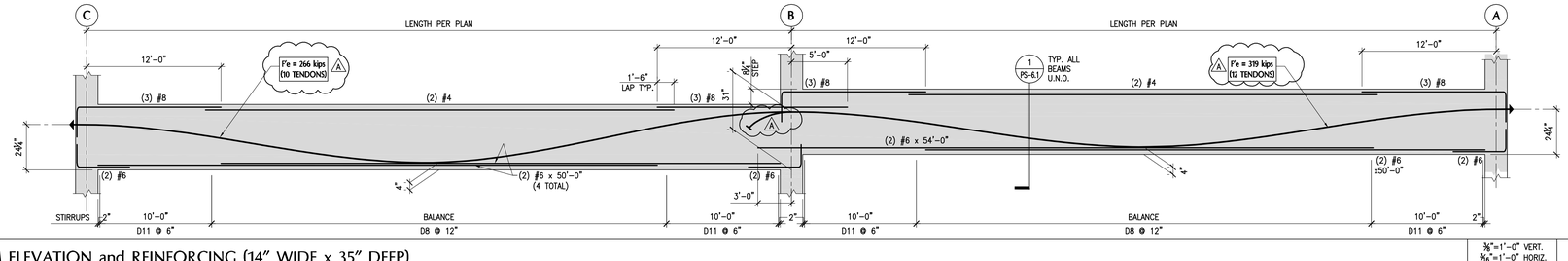

BEAM ELEVATION and REINFORCING (14" WIDE x 35" DEEP)

3/8"=1'-0" VERT.
3/16"=1'-0" HORIZ.
TYP. U.N.O.

B-7

Bayley Construction
3730 S. Susan St.
Suite 200
Santa Ana, CA, 92704
CA. License 734880
Tel 714-540-8863
Fax 714-556-8863

Bayley Construction
8005 S.E. 28th St.
P.O. Box 9004
Mercer Island, WA. 98040
WA. License
BAYLEC034JC
Tel 206-621-8884
Fax 206-343-7728

BAYLEY CONSTRUCTION

Pacific Parking DESIGN
6 Venture, Suite 275 949.341.0066 t
Irvine, California 92618 949.341.0099 f

DLR Group WWCOT
Architecture Engineering Planning Interiors
4280 Latham Street, Suite H 951.682.0470 t
Riverside, California 92501 951.682.1801 f

REGISTERED PROFESSIONAL ENGINEER
DENIS K. BASTIAN
No. 7014
Exp. 12/31/12
STRUCTURAL
STATE OF CALIFORNIA

Public Agency Submittal:
Issued for Bidding:
Issued for Construction:

Revisions:

A 09.15.2011 PERMIT SET

PHASE II:
FOX
ENTERTAINMENT
PLAZA:
PARKING GARAGE

3605 Market Street, Riverside, CA 92501

CITY of RIVERSIDE

CITY OF RIVERSIDE

3900 Main Street, Riverside, CA 92522

Phase:
Revised
PPD Project № 10-101

BEAM ELEVATIONS

Issued Date: 05.02.2011
Drawn By: JT/MT/CG
Checked By: DKB

PS-6.2
Sheet №

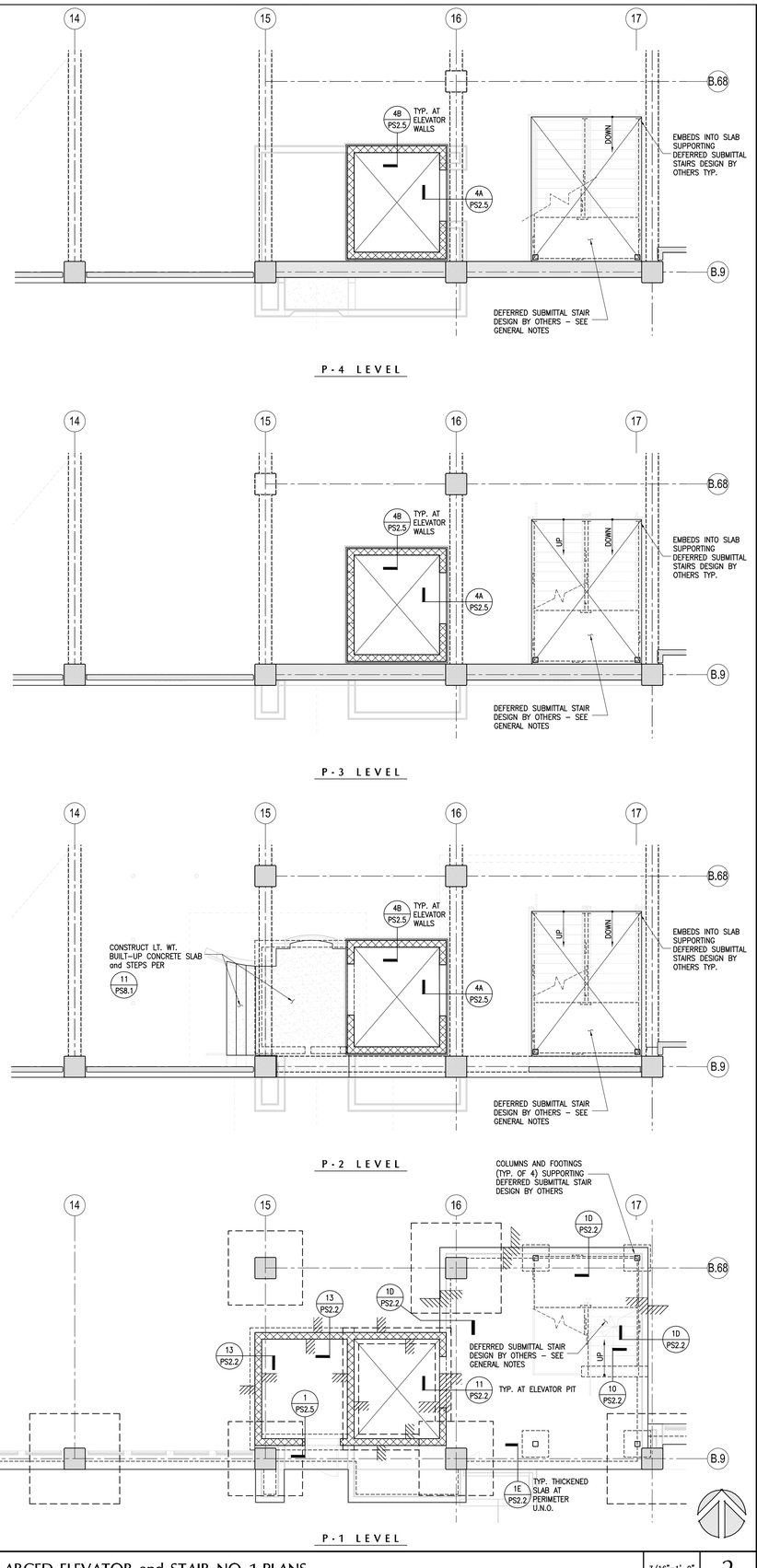

ENLARGED ELEVATOR and STAIR NO. 1 PLANS | 3/16"=1'-0" | 2

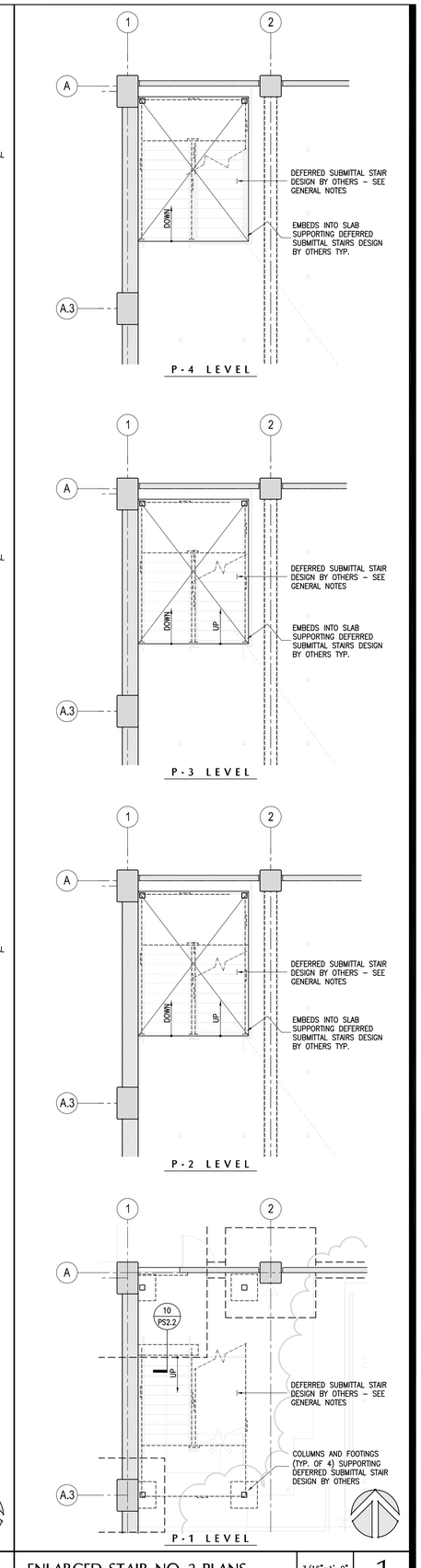

ENLARGED STAIR NO. 2 PLANS | 3/16"=1'-0" | 1

Bayley Construction
3730 S. Susan St.
Suite 200
Santa Ana, CA, 92704
CA. License 734880
Tel 714-540-8863
Fax 714-556-8863

Bayley Construction
8005 S.E. 28th St.
P.O. Box 9004
Mercer Island, WA. 98040
WA. License
BAYLEC034JC
Tel 206-621-8884
Fax 206-343-7728

BAYLEY CONSTRUCTION

Pacific Parking DESIGN
6 Venture, Suite 275 949.341.0066 t
Irvine, California 92618 949.341.0099 f

DLR Group WWCOT
Architecture Engineering Planning Interiors
4280 Latham Street, Suite H 951.682.0470 t
Riverside, California 92501 951.682.1801 f

REGISTERED PROFESSIONAL ENGINEER
DENNIS K. BASTIAN
No. 14
Exp. 12/31/13
STRUCTURAL
STATE OF CALIFORNIA

Public Agency Submittal:
Issued for Bidding:
Issued for Construction:

#	Revisions:	
A	09.15.2011	PERMIT SET

PHASE II: FOX ENTERTAINMENT PLAZA: PARKING GARAGE

3605 Market Street, Riverside, CA 92501

CITY of RIVERSIDE

CITY OF RIVERSIDE

3900 Main Street, Riverside, CA 92522

Phase:
Revised
PPD Project № 10-101

ENLARGED STAIR/ELEVATOR PLANS

Issued Date: 05.02.2011
Drawn By: JT/MT/CG
Checked By: DKB

PS-7.1

Sheet №

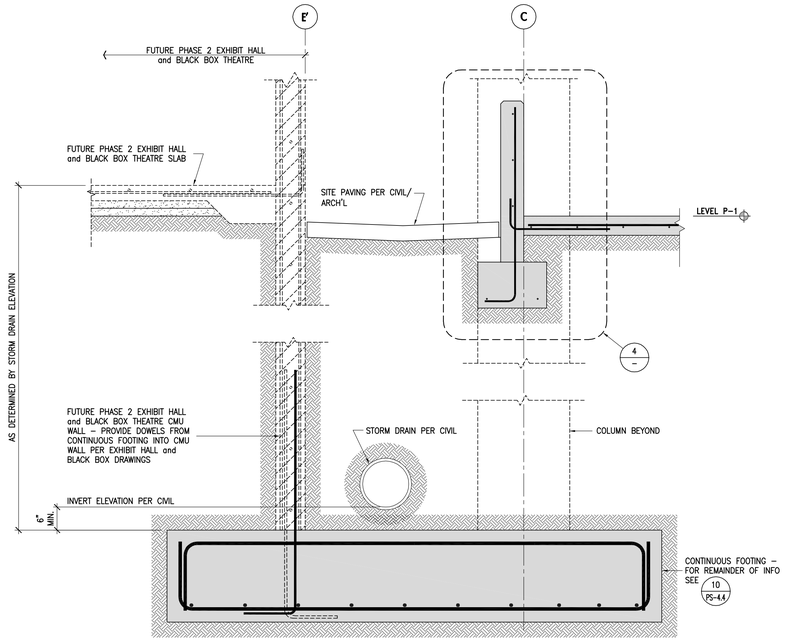

FOOTING and BARRIER WALL SECTION ALONG GRID C | 12

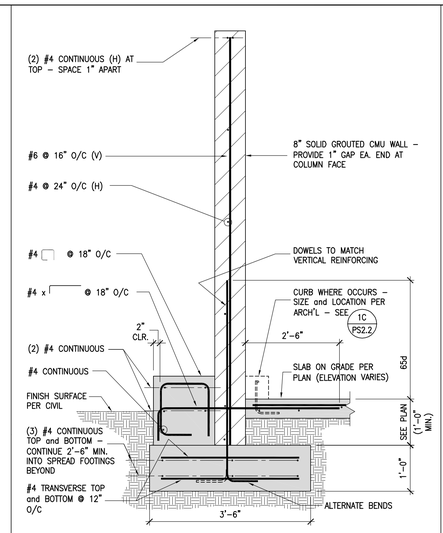

SECTION AT FREESTANDING WALL | 9

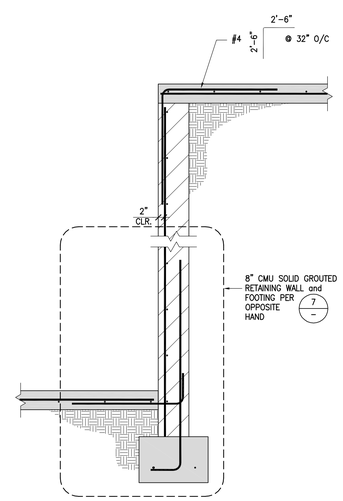

RAMP WALL AT GRID LINE 'B' | 6

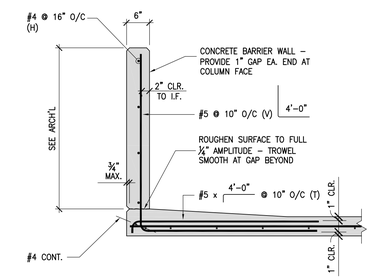

TYPICAL SPANDREL/BARRIER WALL | 3

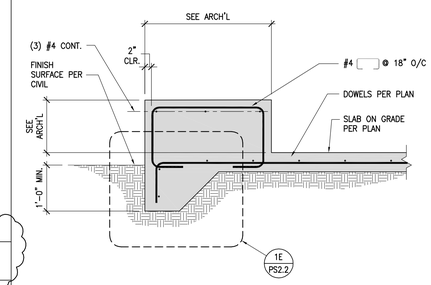

CURB AT RESTAURANT PERIMETER SLAB | 8

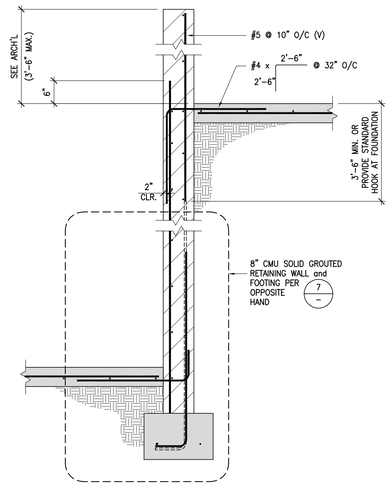

RAMP WALL AT RECYCLE AREA/BIKE LOCKERS | 5

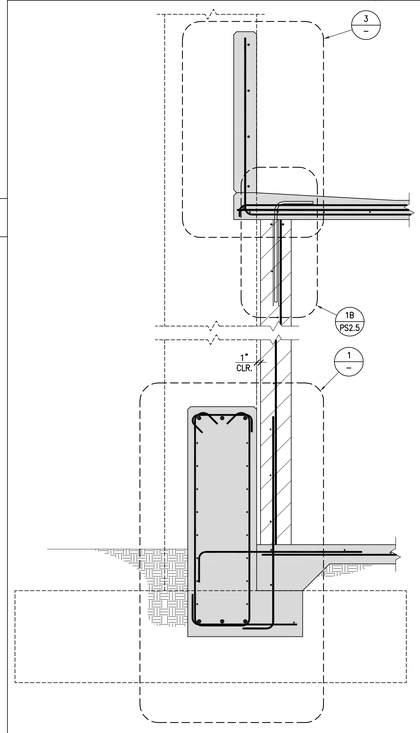

WALL SECTION AT GRID 'A' (BETWEEN GRIDS '10' and '13') | 2

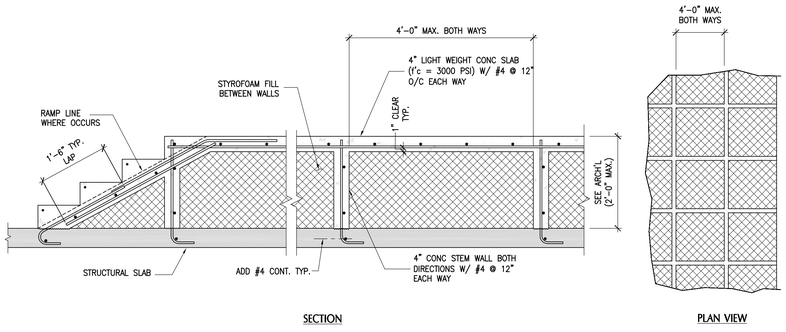

BUILT-UP LIGHT WEIGHT CONCRETE SLAB | 11

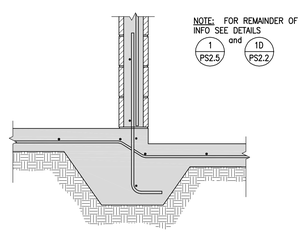

NON-BEARING 8" CMU WALL AT CHANGE IN SLAB ON GRADE ELEVATION | 10

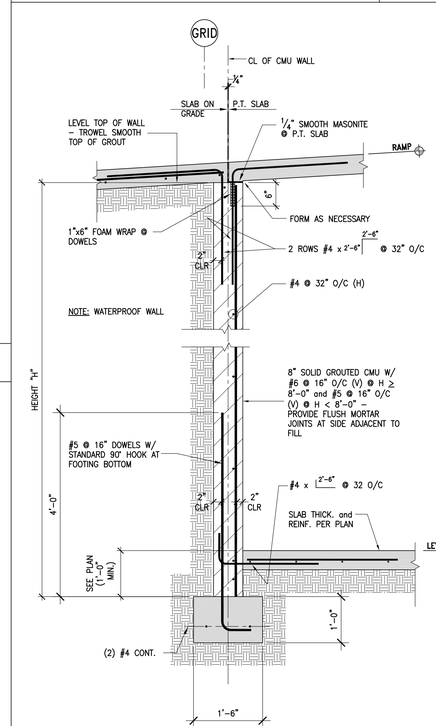

RETAINING WALL SECTION AT RAMP SOG / PT SLAB TRANSITION | 7

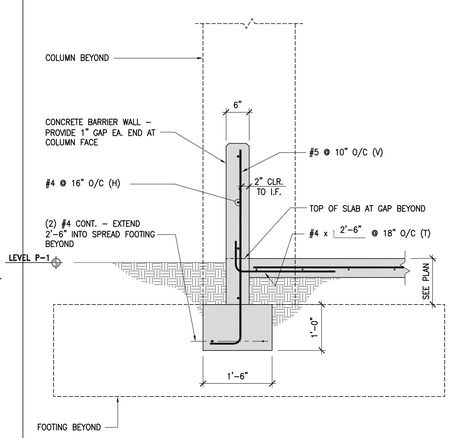

BARRIER WALL AT P-1 LVL | 4

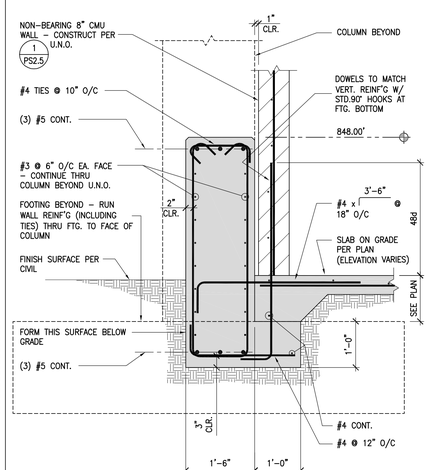

WALL SECTION AT GRID 'C' | NO SCALE TYPICAL U.N.O. | 1

Bayley Construction
3730 S. Susan St.
Suite 200
Santa Ana, CA, 92704
CA. License 734880
Tel 714-540-8863
Fax 714-556-8863

Bayley Construction
8005 S.E. 28th St.
P.O. Box 9004
Mercer Island, WA, 98040
WA. License
BAYLEC034JC
Tel 206-621-8884
Fax 206-343-7728

BAYLEY CONSTRUCTION

Pacific Parking DESIGN
6 Venture, Suite 275 949.341.0066 t
Irvine, California 92618 949.341.0099 f

DLR Group WWCOT
Architecture Engineering Planning Interiors
4280 Latham Street, Suite H 951.682.0470 t
Riverside, California 92501 951.682.1801 f

REGISTERED PROFESSIONAL ENGINEER – DENNIS K. BASTIAN – No. 36414 – Exp. 3/31/13 – STRUCTURAL – STATE OF CALIFORNIA

Public Agency Submittal:
Issued for Bidding:
Issued for Construction:

Revisions:

A 09.15.2011 PERMIT SET

PHASE II: FOX ENTERTAINMENT PLAZA: PARKING GARAGE

3605 Market Street, Riverside, CA 92501

CITY of RIVERSIDE

CITY OF RIVERSIDE

3900 Main Street, Riverside, CA 92522

Phase:
Revised
PPD Project № 10-101

MISCELLANEOUS DETAILS

Issued Date: 05.02.2011
Drawn By: JT/MT/CG
Checked By: DKB

PS-8.1

Sheet №

PARKING STRUCTURE SPECIFICATIONS

SPECIFICATIONS INDEX

DIVISION 1: PROCUREMENT AND CONTRACTING REQUIREMENTS

Not used

DIVISION 1: GENERAL REQUIREMENTS

01 11 00 SUMMARY OF WORK
01 33 00 SUBMITTAL PROCEDURES
01 33 23 SHOP DRAWINGS, PRODUCT DATA AND SAMPLES
01 42 00 REFERENCES
01 45 00 QUALITY CONTROL, TESTS AND CERTIFICATIONS
01 62 00 PRODUCT OPTIONS AND SUBSTITUTIONS
01 66 00 PRODUCT DELIVERY, STORAGE AND HANDLING REQUIREMENTS
01 73 29 CUTTING AND PATCHING
01 74 00 CLEANING
01 77 00 CLOSEOUT PROCEDURES
01 78 00 CLOSEOUT SUBMITTALS
01 78 39 PROJECT RECORD DOCUMENTS

DIVISION 2: EXISTING CONDITIONS

Not used

DIVISION 3: CONCRETE

03 11 10 CONCRETE FORMS
03 20 00 CONCRETE REINFORCEMENT
03 23 00 POST-TENSIONING
03 30 00 CONCRETE – CAST-IN-PLACE
03 35 00 CONCRETE FINISHES

DIVISION 4: MASONRY

04 22 00 CONCRETE UNIT MASONRY

DIVISION 5: METALS

05 05 13 METAL FINISHES
05 31 00 METAL DECK
05 50 00 METAL FABRICATIONS
05 51 00 METAL STAIRS
05 59 00 CABLE STAND BARRIERS

DIVISION 6: CARPENTRY

06 20 00 FINISH CARPENTRY

DIVISION 7: THERMAL AND MOISTURE PROTECTION

07 10 00 WATERPROOFING
07 18 16 ELASTOMERIC COATINGS
07 24 00 EXTERIOR INSULATION AND FINISH SYSTEM
07 50 00 ROOFING
07 62 00 FLASHINGS AND ARCHITECTURAL SHEET METALS
07 92 00 SEALANTS AND CAULKING

DIVISION 8: DOORS AND WINDOWS

08 11 13 HOLLOW METALWORK
08 31 00 ACCESS DOORS AND PANELS
08 33 26 OVERHEAD COILING GRILLES
08 41 00 ALUMINUM FRAMED ENTRANCES AND STOREFRONTS
08 51 13 ALUMINUM WINDOWS
08 71 00 FINISH HARDWARE
08 81 00 GLAZING
08 91 19 WALL LOUVERS

DIVISION 9: FINISHES

09 22 16 NON-LOAD BEARING WALL FRAMING
09 22 36 METAL LATH AND ACCESSORIES
09 24 00 PORTLAND CEMENT PLASTER
09 25 13 SYNTHETIC PLASTER FINISH COAT
09 29 00 GYPSUM BOARD
09 91 00 PAINTING

DIVISION 10: SPECIALTIES

10 14 16 SIGNAGE
10 14 36 NON ILLUMINATED SIGNS
10 22 13 WOVEN WIRE PARTITIONS AND FENCES
10 28 13 TOILET ACCESSORIES
10 44 00 FIRE EXTINGUISHERS AND CABINETS AND FIRE ACCESSORIES

DIVISION 11: EQUIPMENT

11 12 00 PARKING CONTROL EQUIPMENT

DIVISION 12: FURNISHINGS

Not used

DIVISION 13: SPECIAL CONSTRUCTION

Not used

DIVISION 14: CONVEYING SYSTEMS

14 24 00 HYDRAULIC ELEVATORS

DIVISION 21: FIRE SUPPRESSION SYSTEMS

DIVISION 22: PLUMBING

22 05 00	BASIC MATERIAL AND METHODS
22 05 01	PLUMBING
22 11 23	PLUMBING EQUIPMENT
22 21 13	PLUMBING PIPING
22 40 00	PLUMBING FIXTURES

DIVISION 23: HEATING VENTILATION AND AIR CONDITIONING

23 05 00	BASIC MATERIAL AND METHODS
23 05 93	TESTING, ADJUSTING & BALANCING
23 07 00	HVAC INSULATION
23 23 00	REFRIGERANT PIPING SYSTEMS
22 31 13	AIR DISTRIBUTION
22 34 13	FANS AND VENTS
23 81 25	MINI-SPLIT AIR CONDITIONING UNITS

DIVISION 24: TO DIVISION 25:

Not used

DIVISION 26: ELECTRICAL

26 00 00	ELECTRICAL
26 05 73	OVERCURRENT PROTECTIVE DEVICE COORDINATION STUDY AND ARC FLASH HAZARD ANALYSIS

DIVISION 27: TO DIVISION 30:

Not used

DIVISION 31: EARTHWORK

31 23 16	STRUCTURE EXCAVATION AND BACKFILL

DIVISION 32: EXTERIOR IMPROVEMENTS

32 17 13	PARKING BUMPERS
32 17 23	PAVEMENT MARKINGS

DIVISION 33: TO DIVISION 48:

Not used

END OF SPECIFICATION INDEX

SUMMARY OF WORK

SECTION 011100

1. GENERAL

The General Conditions and Special Conditions are a part of this Section and the Contract for this work. They apply to this Section as fully as if repeated here.

1.1 WORK COVERED BY CONTRACT DOCUMENTS

A. Work of this Contract consists of Free-Standing 3-Story Building w/ an Occupied Roof (4 Parking Levels) Open Parking Garage w/ Ground Level Moderate Hazard Storage Area and "Shell Only" Future Restaurant Space.

1. The Work specifically includes all work as represented by the Drawings and Specifications issued for construction and subsequent approved revisions and addends.

B. If certain features are not fully shown or called for on the Drawings, their construction shall be the same character, quality and level of performance as for similar conditions that are shown, called for, or reasonably inferred.

C. Provide all labor, equipment, and materials that are required to provide a complete, properly operating, and safe building. The extent of the work, as indicated on the Drawings and as described in the Specifications, shall include all that may be reasonably inferred to be required for proper execution or installation of work and for complete systems.

D. Should the General Conditions or Contract Documents contradict themselves; the Contractor shall provide the more stringent or higher quality or quantity, unless otherwise accepted by the owner.

E. The Drawings shall be recognized as diagrammatic in nature and not completely descriptive of all requirements for construction. Whatever work may be specified and not drawn or drawn and not specified, is to be executed as fully as if described in both these ways. And, should any workmanship or material be necessary which is not either directly or indirectly noted in these Specifications or shown on the Drawings but is nevertheless necessary for the purpose of properly carrying out the obvious intention thereof, the Contractor is to understand the same to be implied and is o provide for the same as fully as if I were particular described or delineated.

F. Verify existing conditions and proposed dimensions before commencing work.
1. Determine dimensions where necessary.
2. Immediately notify Architect of any discrepancies and, until they are resolved, do not proceed with affected work.

G. Additional requirements of all parties to the Contract are included in the Contract Forms and Conditions of the Contract.

1.2 CONTRACTS

A. The work shall be constructed under a single guaranteed maximum price design build contract incorporating segregated prices for various portions of the Work.

1.2 DEFINITIONS

A. Where the term, “Contractor,” is used in these Specifications, Bayley Construction, Inc. is referred to.

B. Where the term “Owner” is used in these Specifications, City of Riverside is referred to, unless otherwise indicated.

C. Where the term “Architect” is used in these Specifications, PACIFIC PARKING DESIGN is referred to.

D. Where the term “Structural Engineer” is used in these Specifications, PACIFIC PARKING DESIGN is referred to.

E. Where the term “Plumbing Engineer”, “Mechanical Engineer” or “Electrical Engineer” is used in these Specifications, GLUMAC, Inc. is referred to.

F. Where the term “Civil Engineer” is used in these Specifications, RICK ENGINEERING is referred to.

G. Where the terms, “Plumbing Contractor,” “Electrical Contractor,” etc. are used, it has been for convenience only and in no way affects the overall responsibility of the General Contractor.

H. Where the terms “as required” and “required” are used in these specifications, it shall mean “to meet the Contract Documents, to meet Code requirements, to meet good building practice, to meet the condition prevailing, to meet performance requirements, and to provide complete systems.”

1.3 LISTING OF RELATED WORK

A. Listings of related work or Sections in the various Sections are not necessarily complete listings. They are provided for information and convenience only and are intended to highlight related or similar work which is specified in other Sections. Related work listings and omissions from such listings are not intended to control the Contractor in dividing the work among subcontractors or in establishing the extent of the work to be performed by any trade.

1.4 CONTRACTOR’S USE OF PREMISES

A. Contractor shall have limited use of the premises for execution of the Work within limits to be designated by the Owner.

1.5 OWNER FURNISHED PRODUCTS

A. Contractor shall coordinate delivery schedule with Owner.

B. Contractor shall make arrangements with Owner to ascertain required arrangements for warehousing, delivery to the project site, and installation.

C. Contractor shall be responsible for Owner-furnished products when they become delivered to him or are turned over to him by the Owner’s vendor of distribution.

D. Contractor’s warranty Owner-furnished items shall be limited to installation only provided Contractor performs the installation.

1.6 OWNER OCCUPANCY

A. The Contractor shall allow the Owner to take possession of and use any completed or partially completed portion of the structures during the progress of the Work as soon as is possible without interference to the Work. Contractor shall not be responsible for damages caused by Owner or others outside of Contractor's control. Areas shall be inspected to verify existing conditions prior to occupancy by owner.

B. Possession, use of structure or Work, and placing and installation of equipment by Owner shall not in any way evidence the completion of the Work or any part of it.

END OF SECTION

SUBMITTAL PROCEDURES

SECTION 013300

1 GENERAL

The General Conditions and Special Conditions are a part of this Section and the Contract for this work. They apply to this Section as fully as if repeated here.

1.1 SUMMARY

A. Section includes: Administrative and procedural requirements for submittals required for performance of the Work, including the following:

1. Product data.
2. Shop drawings.
3. Samples.
4. Quality assurance submittals.

B. Administrative Submittals: Refer to other Division 1 Sections and other Contract Documents for requirements for administrative submittals. Such submittals include, but are not limited to, the following:

1. Permits.
2. Applications for Payment.
3. Performance and payment bonds.
4. Insurance certificates.
5. List of subcontractors.

C. General provisions of the Contract, including General and Supplementary General Conditions and Division 1 apply to work on this Section.

1.2 DEFINITIONS

A. Shop Drawings: “Shop Drawings” are drawings, diagrams, schedules and other data specifically prepared for the Work by the Contractor, subcontractor, sub-subcontractor, manufacturer, supplier or distributor to illustrate some portion of the work.

1. Shop Drawings shall establish the actual detail of all the manufactured or fabricated items, indicate proper relation to adjoining Work, and amplify design details of mechanical and electrical equipment in proper relation to physical spaces in the structure.

B. Product Date: “Product Data” are illustrations, specifications, standard schedules, performance charts, instructions, brochures, diagrams and other information furnished by the Contractor to illustrate materials or equipment used in the Project.

C. Samples: “Samples” are physical examples which illustrate materials, equipment, or workmanship and establish standards by which the Work will be judged.

D. Shop drawings, product data, samples and similar submittals are not Contract Documents. The purpose of their submittal is to demonstrate for those portions of the Work for which submittals are required the way the Contractor proposes to conform to the information given and the design concept expressed in the Contract Documents.

E. Manufactured: The term “manufactured” applies to standard units usually mass produced. The term “fabricated” means items specifically assembled or made out of selected materials to meet individual design requirements.

F. Manufacturer’s instructions: The term “manufacturer’s instructions” shall mean the manufacturer’s written instructions on the use or application of the product under conditions similar to those at the jobsite.

G. Coordination drawings show the relationship and integration of different construction elements that require careful coordination during fabrication or installation to fit in the space provided to function as intended.

H. Field samples are full size physical examples erected on-sit to illustrate finishes, coatings, or finish materials. Field samples are used to establish the standard by which the Work will be judged.

I. Mockups are full-size assemblies for review of construction, coordination, testing, or operation; they are not samples

1.3 SUBMITTAL PROCEDURES

A. Submittals are instruments of the Contractor and they include shop drawings, product data, and samples.

B. The Contractor, at his/her own expense, shall furnish for review by the Engineer and the Architect all submittals required by the Contract Documents.

C. Coordination: Coordinate preparation and processing of submittal with performance of construction activities. Transmit each submittal sufficiently in advance of performance of related construction activities to avoid delay.

1. Coordinate each submittal with fabrication, purchasing, testing, delivery, other submittals and related activities that require sequential activity.
2. Coordinate transmittal of different types of submittals for related elements of the Work so processing will not be delayed by the need to review submittals concurrently for coordination.
3. The Architect reserves the right to withhold action on a submittal requiring coordination with other submittals until all related submittals are received.

D, Product data and manufacturer’s standard drawings submitted for review shall show only the pertinent information.

1. Contractor shall identify the pertinent information by circling it with blank in pen or by crossing out the inapplicable information with blank ink pen.
2. Any submittal which contains information not clearly identified for review will be rejected and returned to the Contract for resubmission.

E. All submittals shall be reviewed and stamped by the Contractor prior to forwarding them for the Architect’s review.

1. By submitting shop drawings, product data, and samples, the Contractor represents that he/she has determined and verified all dimensions, materials, field measurements, and field construction criteria related thereto and that he/she has checked and coordinated the information contained within such submittals with the requirements of the work and of the Contract Documents.
2. When professional certification of performance criteria of materials, systems or equipment is submitted, the Architect shall be entitled to rely upon the accuracy and completeness of such calculations and certifications.

F. No portion of the work requiring submission of a shop drawing, product data, or sample shall commence until the submittal has been reviewed and accepted by the Architect. All such portions of the work shall be executed in accordance with accepted submittals.

G. No change shall be made by the Contractor in any submittal after it has been accepted by the Architect.

H. If the submittal shows any variation from the Contract requirements because of standard shop practice or other reasons, the Contractor shall make specific mention of each variation in his/her submittal.

I. The Architect will review the Contractor's submittals only for the limited purpose of checking for conformance with information given and the design concept expressed in the Contract Documents. Review of such submittals is not conducted for the purpose of determining the accuracy and completeness of other details such as dimensions and quantities, or for substantiating instructions for installation or performance of equipment or systems, all of which remain the responsibility of the Contractor as required by the Contract Documents.

J. The Architect's review of the Contractor's submittals shall not relieve the Contractor of the obligations to comply with the requirements of the Contract Documents. The Architect's review shall not constitute approval of safety precautions or of any construction means, methods, techniques, sequences or procedures. The Architect's acceptance of a specific item shall not indicate acceptance of an assembly of which the item is a component.

K. Processing: Allow sufficient time for submittal review, including time for resubmittals.

1. Allow minimum 2 weeks for initial review. Allow minimum of 3 weeks for complicated or large submittals and coordinate the required submittal review time with the Architect. Allow additional time if the Architect must delay processing to permit coordination with subsequent submittals.
2. If an intermediate submittal is necessary, process the same as the initial submittal.
3. Allow 2 weeks for reprocessing each submittal.
4. No extension of Contract Time will be authorized because of failure to transmit submittals to the Architect sufficiently in advance of the Work to permit processing.

L. Submittal Preparation: Place a permanent label or title block on each submittal for identification. Indicate the name of the entity that prepared each submittal on the label or title block.

1. Provide a space approximately 4 inches by 5 inches on the label or besides the title block on Shop Drawings to record the Contractor's review and approval markings and the action taken.
2. Include the following information on the label for processing and recording action taken.

    a. Project name.
    b. Date.
    c. Contractor's, Subcontractor's, vendor's, or manufacturer's name, address, and telephone number.
    d. Submittal number.
    e. Product identification or shop drawing title, number, revision, and date as applicable. Where product data contain more than one product, model, selection, etc., clearly mark and identify the information intended to be reviewed by the Architect.
    f. Reference to (Contract) Drawing or Specification Section as applicable.
    g. Provide space for Architect's review stamp. Space shall be minimum 4 inches by 6 inches.

M. Submittal Transmittal: Package each submittal appropriately for transmittal and handling. Submittals shall be wrapped or packaged to prevent damage during delivery. All reproducible drawings shall be rolled, not folded, and wrapped or packaged to prevent damage during delivery. Transmit each submittal from the Contractor to the Architect using a transmittal form. The Architect will not accept submittals received from sources other than the Contractor.

1. On the transmittal, record relevant information and requests for data. On the form, or separate sheet, record deviations from Contract Document requirements, including variations and limitations. Include Contractor's certification that information complies with Contract Document requirements.
2. Transmittal Form: Submittals shall be submitted with the Submittal Record form acceptable to the Contractor and the Architect. Number submittal record forms serially. Fill in information as applicable.

    a. Resubmittals shall have the original submittal number with an alphabetic suffix.

1.4 PRODUCT DATA

A. Collect product data into a single submittal for each element of construction or system.

1. Mark each copy to show applicable choices and options. Where printed product data includes information on several products that are not required, mark copies to indicate the applicable information. Include the following information:

    a. Manufacturer's printed recommendations.
    b. Compliance with trade association standards.
    c. Compliance with recognized testing agency standards.
    d. Application of testing agency labels and seals.
    e. Notation of dimensions verified by field measurement.
    f. Notation of coordination requirements.

B. Do not submit product data until compliance with requirements of the Contract Documents has been confirmed.

C. Preliminary Submittal: Submit a preliminary single copy of product data where selection of options is required.

D. Submittals: Submit 4 copies to the Architect for review; 1 copy of product data and transmittal to the Engineer for information. The Architect will retain 1 and will return the other three marked with action taken and corrections or modifications required.

E. Distribution: Furnish copies of the final submittal to installers, subcontractors, suppliers, manufacturers, fabricators and others required for performance of construction activities. Show distribution on transmittal forms.

1. Do not proceed with installation until a copy of product data is in the installer's possession.
2. Do not permit use of unmarked copies of product data in connection with construction.

1.5 SHOP DRAWINGS

A. Submit newly prepared information drawn accurately to scale. Highlight, encircle, or otherwise indicate deviations from the Contract Documents. Do not reproduce Contract Documents or copy standard information as the basis of shop drawings. Standard information prepared without specific reference to the Project is not a shop drawing. Include the following information:

1. Dimensions.
2. Identification of products and materials included by sheet and detail number.
3. Compliance with specified standards.
4. Notation of coordination requirements.
5. Notation of dimensions established by field measurement.
6. Sheet Size: Except for templates, patterns and similar full size Drawings, submit Shop Drawings on sheets at least 8-1/2 inches by 11 inches but not longer than 36 inches by 48 inches.
7. Submittal: Submit 1 correctable, translucent, reproducible print and 3 bluelines or blackline prints for the Architect's review; 1 opaque print and transmittal form to the Engineer for information. The Architect will return the reproducible print.
8. Do not use shop drawings without an appropriate final stamp indicating action taken.

B. Distribution: Furnish copies of final submittal to installers, subcontractors, suppliers, manufacturers, fabricators and others required for performance of construction activities. Show distribution on transmittal forms.

1. Do not proceed with installation until a copy of shop drawings are in the installer's possession.
2. Do not permit use of unmarked copies of shop drawings in connection with construction.

1.6 SAMPLES

A. Submit full size, fabricated samples cured and finished as specified and physically identical with the material or product proposed.

1. Mount or display samples in the manner to facilitate review of qualities indicated. Prepare samples to match the Architect's sample. Include the following:

    a. Specification Section number and reference.
    b. Generic description of the sample.
    c. Sample source.
    d. Product name or name of the manufacturer.
    e. Compliance with recognized standards.
    f. Availability and delivery time.

B. Submit samples for review of size, kind, color, pattern and texture. Submit samples for a final check of these characteristics with other elements and a comparison of these characteristics between the final submittal and the actual component as delivered and installed.

1. Where variation in color, pattern, texture or other characteristic is inherent in the material or product represented, submit at least 3 multiple units that show approximate limits to the variations.
2. Refer to other Specification Sections for requirements for samples that illustrate workmanship, fabrication techniques, details of assembly, connections, operation and similar construction characteristics.
3. Refer to other Sections for samples to be returned to the Contractor for incorporation in the Work. Such samples must be undamaged at time of use. On the transmittal, indicate special requests regarding disposition of sample submittals.
4. Samples not incorporated into the Work, or otherwise designated as the City's property, are the property of the Contractor and shall be removed from the site prior to the Substantial Completion.

C. Preliminary Submittals: Submit a full set of choices where samples are submitted for selection of color, pattern, texture or similar characteristics from a range of standard choices.

1. The Architect will review and return preliminary submittals with the Architect's notation, indicating selection and other action.

D. Submittals: Except for samples illustrating assembly details, workmanship, fabrication techniques, connections, operation and similar characteristics, submit 5 sets; 1 copy of transmittal form to the Engineer for information. The Architect will return 2 sets marked with the action taken.

1. Maintain sets of samples, as returned, at the Project site, for quality comparisons throughout the course of construction.

E. Distribution of Samples: Prepare and distribute additional sets to subcontractors, manufacturers, fabricators, suppliers, installers and others as required for performance of the Work. Show distribution on transmittal forms.

1. Field samples are full size examples erected on site to illustrate finishes, coatings or finish materials and to establish the Project standard.
2. Comply with submittal requirements to the fullest extent possible. Process transmittal forms to provide a record of activity.

1.7 QUALITY ASSURANCE SUBMITTALS

A. Submit quality control submittals, including design data, certifications, manufacturer's instructions, manufacturer's field reports and other quality control submittals as required under other Sections of the Specifications.

B. Certifications: Where other Sections of the Specifications require certification that a product, material or installation complies with specified requirements, submit a notarized certification from the manufacturer certifying compliance with specified requirements.

1. Signature: Certification shall be signed by an officer of the manufacturer or other individual authorized to sign documents on behalf of the company.

C. Inspection and Test Reports: Requirements for submittal of inspection and test reports from independent testing agencies are specified in Section 01400.

1.8 ARCHITECT'S ACTION

A. Except for submittals. For the record or information, where action and return is required, the Architect will review each submittal; mark to indicate action taken, and return in a timely manner:

1. Compliance with specified characteristics is the Contractor's responsibility.

B. The Architect will return the submittals stamped "No Exceptions Taken" or "Make Corrections Noted" or "Rejected" or "Submit Specified Item" or "Revise and Resubmit"

1. When "No Exceptions Taken" is indicated, the Contractor is advised that fabrication, manufacturer, or construction many proceed, providing it complies with the Contract Documents.
2. When "Make Corrections Noted" is indicated, the Contractor is advised that fabrication, manufacture, or construction may proceed, providing it complies with Architect's notations and the Contract Documents. The above 2 categories are considered as acceptable submittals.
3. When other notation is indicated, the Contractor is advised that no work shall be fabricated, manufactured, or constructed. The Contractor shall make a new submission in accordance with the procedures specified.

NO EXCEPTION TAKEN
MAKE CORRECTIONS NOTED
REJECTED
SUBMIT SPECIFIED ITEM
REVISE AND RESUBMIT

Checking is only for general conformance with the design concept of the project and general compliance with the information given in the contract documents. Any action shown is subject to the requirements of the plans and specifications. Contractor is responsible for Dimensions which shall be confirmed and correlated at the job site; fabrication processes and techniques of construction; coordination of Contractor's work with that of all other trades and satisfactory performance of Contractor's work.

PACIFIC PARKING DESIGN
Date_____
By_____

1.9 USE OF SUBMITTALS

A. Work shall be fabricated, constructed, and furnished in accordance with the acceptable submittals. One copy of such acceptable submittals shall be kept at the jobsite.

B. Contractor shall not use any unacceptable submittals or submittal materials without the Architect's (and his/her consultant's) stamp of acceptance for reference in doing my work.

END OF SECTION

SHOP DRAWINGS, PRODUCT DATA AND SAMPLES

SECTION 013323

1 GENERAL

The General Conditions and Special Conditions are a part of this Section and the Contract for this work. They apply to this Section as fully as if repeated here.

1.1 DESCRIPTION: This Section covers the general requirements and procedures for submittals of Shop Drawings, Product Data and Samples.

A. Related Work Not in This Section: Tests and certifications.

1.2 DEFINITIONS:

A. Shop Drawings: Original drawings prepared by the Vendor, Subcontractor, Supplier or Distributor, which illustrates some portion of the Work; showing fabrication, layout, setting or erection details. Identify details by reference to sheet and detail numbers shown on the working drawings.

B. Product or Catalog Data: Manufacturers standard drawings modified to delete non-applicable data or include applicable data; and manufacturers catalog sheets, brochures, diagram, schedules, charts, illustrations or other descriptive data. Mark each copy to identify pertinent dimensions, materials, products or models.

1.3 VENDOR'S RESPONSIBILITIES

A. Prior to Submittal:

1. Review and approve Shop Drawings and Product Data, prior to submission to the Architect.

a. Coordinate each submittal with the Work and Contract Documents so as not to cause delays to the Work.
b. By submitting Shop Drawings and Product Data, Vendor represents that Vendor has determined and verified all materials, measurements and criteria related thereto, or will do so, and that Vendor has checked and coordinated the information contained within such submittals with requirements of the work and of the Contract Documents.
c. The Vendor shall not be relieved of responsibility for any deviation from requirements of Contract Documents by Architect's acceptance unless the Vendor has specifically informed the Architect in writing of such deviation at the time of submission and the Owner has given written acceptance to the specific deviation.
d. Vendor's responsibility for errors and omissions in submittals or deviations from the Contract Documents is not relieved by the Architect's review of submittals.
e. Vendor shall direct specific attention, in writing or on resubmitted Shop Drawings, Product Data, or Samples, to revisions other than those requested by the Architect on previous submittals.

B. After Submittal: Begin no Work which requires submittals until the return of such submittals with Architect's stamp and signature indicating the review. Distribute

copies of submittals to subcontractors, suppliers or manufacturers as their interests appear.

1.4 IDENTIFICTION OF DATA

A. Identification Data: All submittals for review shall have the following identification data, as applicable, contained thereon or permanently adhered thereto.

1. Project name and location.
2. Specification number.
3. Subcontractor's, Vendor's, and/or Manufacturer's name, address and phone number.
4. Product Identification.
5. Show Drawings, title, Vendor's drawing number and date of the drawing and revisions.
6. Applicable Contract Drawings and Specification Section numbers.

B. Catalog Data:

1. Each separate catalog, brochure or single page data sheet which is submitted shall have required identification.
2. Catalogs or brochures containing multiple items for review need identification only on the over. Identify the page numbers and catalog items.
3. In event that one or more of the multiple items are not accepted in any submittal, additional copies will be required until all items are accepted.
4. Provide a space approximately 2-1/2" x 4" size for the Architect to affix the status stamp.

1.5 SUBMISSION REQUIREMENTS

A. Requirements: Submit all Shop Drawings and Product or Catalog Data to the Architect by transmittal in accordance with requirements specified. Shop Drawings shall include, but shall not be limited to, fabrication drawings, installation drawings, setting diagrams, bolting templates and schedules.

B. Product data requirements: Submit all product or catalog data to the Architect by transmittal in accordance with requirements specified. Product Data shall include, but shall not be limited to manufacturer's product specifications and installation instructions.

C. Submittal and Resubmittal:

1. Original Submittal: Two reproducible sets and six copies of all Shop Drawings and/or Product Data for review in ample time to coordinate necessary features of construction with all fabrication and installation requirements.
2. Resubmittal: When revisions are required, copies will be returned to Vendor. After revision, submit new copies as stipulated for original submittal. Indicate all changes.

1.6 REVIEW AND PROCESSING

A. General:

1. Architect will review and accept or take other appropriate action upon the Vendor's submittals for conformance with the design criteria and with the information given in the Purchase Agreement Documents. Acceptance

of a specific item shall not indicate acceptance of an assembly of which the item is a component.

END OF SECTION

REFERENCES

SECTION 014200

1 GENERAL

The General Conditions and Special Conditions are a part of this Section and the Contract for this work. They apply to this Section as fully as if repeated here.

1.1 SUMMARY

A. Section includes (but is Not Necessarily Limited to):

1. Requirements for standard references used in the various Specification Sections.
2. Abbreviation used in the Project Manual.

1.2 STANDARD SPECIFICATIONS

A. The Contract Documents contain references to various standard specifications, codes, practices, and requirements for materials, work quality, installation, inspections, and tests published and issued by the organizations, societies, and associations. Such references are hereby made part of the Contract Documents to the extent required.

B. The Specifications and Standards of the American Society for testing and Materials (ASTM) and the American National Standards Institute (ANSI) are identified in the various Sections by the abbreviation and number only (not by title) and are not further identified, because it is assumed that the Contractor is familiar with and has ready access to specified ASTM and ANSI Specifications and Standards.

C. When the effective date of the reference standard is not given, it shall be understood that the current edition or latest revision thereof any amendments or supplements thereto in effect on the date of issue of these Contract Documents, as indicated on the cover, shall govern the work.

D. Reference standards are not furnished with the Contract Documents, because the Contractor, subcontractors, manufacturers, suppliers, and the trades involved are assumed to be familiar with their requirements.

E. The specification or standard referred to shall have full force and effect as though printed in these Specifications, except as modified in these Specifications.

F. In addition to those standards specifically referenced in the Specifications, all work shall comply with the accepted industry standards and trade association recommendations of the respective portions of work.

1.3 STANDARD SPECIFICATION ABBREVIATIONS

A. In addition to abbreviations indicated on the Drawings, references in the Project Manual to trade associations, technical societies, recognized authorities, and other institutions may include the following organizations, which are sometimes

referred to by only the corresponding abbreviations. Not all abbreviations are listed, and not all listed abbreviations are used.

1. Abbreviations:

ACI:	American Concrete Institute
ADA:	Americans with Disabilities Act of 1991
AIA:	American Institute of Architects
AISC:	American Institute of Steel Construction
ASA:	American Standards Society
ASTM:	American Society of Testing Materials
AWS:	American Welding Society
CBC:	California Building Code
CRSI:	Concrete Reinforcing Steel Institute
CS:	Commercial Standard of U.S. Department of Commerce
DFPA:	Douglas Fir Plywood Association
IBC:	International Building Code of the International Code Council
FM:	Factory Mutual
NEC:	National Electrical Code
NFPA:	National Fire Protection Association
NSPE:	National Society of Professional Engineers
PCI:	Precast Concrete Institute
PTI:	Post-tensioned Concrete Institute
U.L.:	Underwriters Laboratories
UBC:	Uniform Building Code of the International Conference of Building Officials.

END OF SECTION

QUALITY CONTROL, TESTS AND CERTIFICATIONS

SECTION 014500

1 GENERAL

The General Conditions and Special Conditions are a part of this Section and the Contract for this work. They apply to this Section as fully as if repeated here.

1.1 DESCRIPTION: Section established guidelines for Quality Control, Tests and Certifications.

1.2 QUALITY ASSURANCE/CONTROL ON INSTALLATION

A. Quality Control: Monitor quality control over suppliers, manufacturers, products, services, site conditions and workmanship to produce Work of the specified quality per the requirements established in the Quality Control Program.

B. Manufacturers Instructions: Comply fully with manufacturers instructions including each step in sequence.

C. Conflicts: Should manufacturer's instructions conflict with the Contract documents, request clarification from before proceeding.

D. Quality:

1. Comply with specified standards as a minimum quality for the Work except when more stringent tolerances, code or specified requirements indicate higher standards or more precise workmanship.
2. Perform Work by persons qualified to produce workmanship of specified quality.

1.3 REFERENCES: Conform to most recent reference standards. Should specified reference standards conflict with Contract Documents, request clarification from Architect before proceeding.

1.4 PROJECT INSPECTOR:

A. Inspector: An Inspector herein referred to as the "Project Inspector" or "Job Inspector," will be employed by the Owner.

B. Inspection: The Work of construction in all stages of progress shall be subject to the personal continuous observation of the Project Inspector. Project Inspector shall have free access to any and all part of the Work at any time, including every phase of the manufacturing process. Contractor shall furnish the Inspector reasonable facilities for obtaining such information as may be necessary to keep Inspector fully informed respecting the progress and manner of the Work and the character of the materials.

1.5 CONSTRUCTION FIELD REPORS: Contractor shall be required to issue construction field reports through the Architect

1.6 TESTS AND CERTIFICATIONS

A. Certifications: Submit the following documents, written and signed by an independent testing agency.

B. Certification that all testing equipment has been checked for accuracy by appropriate standards (ASTM E4, etc.) for the purpose of this Contract.

1. Certified mill test reports for all steel to be used.
2. Certified Material Test Reports: Certified Material Test: Reports (CMTR) including mechanical properties shall be supplied for all structural materials.

END OF SECTION

PRODUCT OPTIONS AND SUBSTITUTIONS

SECTION 016200

1 GENERAL

The General Conditions and Special Conditions are a part of this Section and the Contract for this work. They apply to this Section as fully as if repeated here.

1.1 SUMMARY

A. Section Includes:

1. Specific requirements for submission and approval of products other than those specified herein or on the Drawings.

1.2 SUBSTITUTES

A. The name of a certain brand, make, manufacture, or definite specification is to denote the quality standard or the article desired.

B. For products specified by naming one or more products or manufacturers and "or accepted equal," "or equal," "or approved equal," or similar language. Contractor shall submit a request for substitution to use any product or manufacturer not specifically named.

C. Where the words "or accepted equal," "or equal," "or approved equal," or similar language is absent or where the term "no substitution" is used, provide only the named product or products.

D. Where the specifications include language that other manufacturers and products will be considered for approval, Contractor shall submit a request for substitution to use any product or manufacturer not specifically named.

E. Substituted products shall not be ordered or installed without written acceptance of the Architect.

1.3 PRIOR APPROVAL OF SUBSTITUTES

A. Prior to acceptance by Owner of Contract price, Architect will consider written request from Contractor for substitution of products.

B. Include a statement in the transmittal letter, signed by the supplier and Contractor that the proposed substation is in full compliance with the Contract Documents.

C. Substitutions which are equal in quality and utility to those specified may be acceptable at the sole discretion of the Architect and Owner, subject to the following provisions and those included in the General Conditions.

D. Submit separate request for each product and support each request with:

1. Product identification with manufacturer's literature and samples, where applicable, to allow for side-by-side review of first-named item and proposed substitution.

2. Name and address of similar projects on which product has been used, and date of installation.
3. Complete technical data, including drawings, manufacturer's specifications, costs, samples and test reports of the product proposed for substitution. Submit additional information if requested by the Architect.
4. Data shall be similar to that specified for the product for which a substitution is proposed is presented in a line by line comparison.
5. Effect, if any, on the construction schedule.
6. Signed statement that the proposed substitution is in full compliance with the Contract Documents and applicable regulatory requirements.
7. List of work, if any, which may be affected by the substitution. The Contractor shall be responsible for the effect of a substitution upon related work, and pay the additional costs, generated thereby, including the cost of the Architect and the Architect's consultants additional services associated herewith.
8. Information on availability of maintenance service, and source of replacement materials, as applicable.
9. Sample of material' standard form of guarantee or warranty for the proposed substitution, as applicable.
10. Accurate cost data comparing proposed substitution with product indicated or specified and amount of net charge in Contract Sum, if any, include costs to other contractors and costs for revisions to Drawings and Specifications.

E. Itemize comparison of proposed substitution with product specified and list significant variations, in a side by side format.

F. All substitutes shall be accepted by the Architect, in writing. The Architect's acceptance shall not relieve the Contractor from complying with the requirements of the Contract's Documents, and the Contractor shall be responsible at his own expense for any changes resulting and subsequently becoming apparent from his proposed substitutions which affect other parts of his own work or the work of other contractors.

G. Substitutions submitted by the Contractor for any material, product, or equipment for that specified may be subject to such tests and will determine its quality.

H. All handling, testing, and inspection costs pertaining thereto shall be paid by the Contractor.

1. All such tests shall be made upon the request of the Contractor and Architect

I. The Contractor shall pay for any added costs caused by the substitution, including Architect and consultant's review time and/or services.

J. Guarantees and warranties for substituted items must be equivalent to that for specified items.

K. Substitutions or alternate products will not be considered because of the Contractors tardiness in preparing and forwarding required submittals for Architect's review.

1.4 AVAILABILITY OF SPECIFIED ITEMS

A. Prior to execution of the Contract, verify that all specified items will be available in time for installation during orderly and timely progress of the Wok. Notify the Architect if specified item or items will not be available.

B. Costs of delays because of nonavailability of specified items, when such delays could have been avoided by the Contractor, will be deducted from the Contract as necessary and will not be borne by the Owner.

1.5 SUBSTITUTIONS AFTER EXECUTION OF THE CONTRACT

A. Failure to propose the substitution of any product in ample time before its scheduled installation for evaluation may be deemed sufficient cause for the denial of the request for substitution.

B. Substitutions will not be considered when they are indicated or implied on submittals without separate written request prior to submittal or when acceptance will require substantial revision of Contract Documents.

C. Architect will consider requests during construction for substitutions (following procedures specified above for prior approvals) only under one or more of the following conditions.

1. Substitution is required for compliance with subsequent interpretation of code requirements or insurance regulations.
2. Shown or specified item or system cannot be provided within Contract time or becomes unavailable owing to no fault of Contractor.
3. Subsequent information discloses inability of item(s) or system(s) to perform properly or to fit in designated space or manufacturer(s) refuse(s) to certify or warrant performance as required.
4. When, in Architect's judgment, a substitution would be substantially in Owner's best interests in terms of cost (substantial credit) time, or other valuable considerations, after deducting offsetting responsibilities and costs. Owner may be required to bear, including additional compensation to Architect for evaluation and redesign services, increased cost or other work by Owner or separate contractors, and similar considerations.
5. When an "equal" product exists that the Contractor proposes to use.

END OF SECTION

PRODUCT DELIVERY, STORAGE AND HANDLING REQUIREMENTS

SECTION 16600

1 GENERAL

The General Conditions and Special Conditions are a part of this Section and the Contract for this work. They apply to this Section as fully as if repeated here.

1.1 SUMMARY

A. Requirements for Material and Equipment Incorporated into the Work:

1. Conform to applicable specifications and standards.
2. Comply with size, make, type and quality specified or as specifically accepted in writing by the Architect.
3. Manufactured and Fabricated Products:

a. Design, fabricate, and assemble in accordance with best engineering and shop practices
b. Manufacture like parts of duplicate units to standard sizes and gages so as to be interchangeable.
c. Two or more items of the same kind shall be identical, by the same manufacturer.
d. Products shall be suitable for service conditions.
e. Equipment capabilities, sizes, and dimensions shown or specified shall be adhered to, unless variations are specifically accepted in writing.
f. Do not use material or equipment for any purpose other than that for which it is designed or is specified.
g. Contractor shall be responsible for his own material and equipment.
h. Only new material and equipment shall be incorporated into the Work.

1.2 MANUFACTURER'S INSTRUCTIONS

A. When Contract Documents require that installation of work s hall comply with manufacturer's printed instructions. Contractor shall obtain and distribute copies of such instructions to parties involved in the installation. Maintain one set of complete instructions at the jobsite during installation and until completion.

B. Handle, install, connect, clean, condition, and adjust products in strict accordance with such instructions and in conformance with specified requirements.

C. Perform work in accordance with manufacturer's instructions. Do not omit any preparatory step or installation procedure, unless specifically modified or exempted by the Contract Documents.

1.3 TRADE MATERIALS AND STANDARDS

A. The various Sections of the Specifications list trade manuals and standards that govern the quality and workmanship adopted as criteria by the trades involved.

B. A copy of each listed manual or standard shall be available for reference, or the Architect will furnish information as to how copies of manuals and standards may be obtained.

1.4 TRANSPORTATION AND HANDLING

A. Arrange deliveries of products in accordance with the Construction Progress Schedule; coordinate to avoid conflict with work and conditions at the site.

B. Deliver all materials normally packaged in the factory in original unopened containers bearing manufacturer's name, registered brand and trade mark, or other designation (such as Federal Specification to which material complies, grade, etc.) specified under various Sections of Specification.

C. Immediately upon delivery, inspect shipments to assure compliance with requirements of Contract Documents and accepted submittals and that products are properly protected and undamaged.

D. Provide equipment and personnel to handle products by methods so as to prevent soiling or damaging of products or packaging.

1.5 STORAGE AND PROTECTION

A. Store products in accordance with manufacturer's instructions, with seals and labels intact and legible.

1. Store products subject to damage by elements in weathertight enclosures.
2. Maintain temperature and humidity within ranges required by manufacturer's instruction.

B. Exterior storage:

1. Store fabricated products above ground on blocking or skids; prevent soiling or staining.
2. Cover products which are subject to deterioration with impervious sheet coverings; provide adequate ventilation to avoid condensation.
3. Store loose granular materials in a well-drained area on solid surfaces so as to prevent mixing with foreign matter.

C. Arrange storage in a manner so as to provide easy access for inspection.

D. Make periodic inspections of stored products to assure that products are maintained under specified conditions and free from damage or deterioration.

E. Protect material and equipment after installation.

1. Provide substantial coverings as necessary to protect installed products from environmental conditions, damage from traffic, and subsequent construction operations.
2. Remove when no longer needed, unless otherwise specified or noted by the Architect.

END OF SECTION

CUTTING AND PATCHING

SECTION 017329

1. GENERAL

The General Conditions and Special Conditions are a part of this Section and the Contract for this work. They apply to this Section as fully as if repeated here.

1.1 SUMMARY

A. Section includes

1. Contractor's responsible for cutting, fitting and patching required to complete the work and to:

a. Make its parts fit together perfectly.
b. Uncover portions of work to provide for installation of ill-timed work.
c. Remove and replace defective work.
d. Remove and replace work not conforming to requirements of Contract Documents.
e. Remove samples of installed work as required for testing in accordance with Section 01400 Quality Assurance.
f. Provide routing penetrations of non-structural surfaces for installation of piping, electrical conduit and stack shelving and cabinetwork backing.
g. Join and finish construction at connections to other structures

B. Related Sections

1. Section 014500 Quality Assurance: Requirements for provision of testing requirements.
2. Section 016200 Substitutions: Requirements for provision of substitutions.
3. Divisions 21,22,23,26 and 33: Cutting and patching of existing work as required to accommodate utilities work.

C. General provisions of the Contract, including General and Supplementary Contract Conditions and Division 1 apply to work of this section

1.2 SUBMITTALS

A. Submit a written request to the Architect well in advance of executing cutting or alteration which affects:

1. Work of the Owner or separate contractor.
2. Structural value or integrity of any element of the Project.
3. Integrity or effectiveness of weather-exposed or moisture resistant elements or systems.
4. Efficiency operational life maintenance or safety of operational elements.
5. Visual quality of sight exposed elements.

B. Request shall include the following:

1. Identification of the Project.
2. Description of the affected work.
3. Necessity for cutting or alteration.
4. Effect on work of the Owner or separate contractor, or on structural or weatherproof integrity of the project.
5. Alternatives to cutting and patching.
6. Cost proposal, when applicable.
7. Written permission of separate contractor whose work will be affected.
8. Description of proposed work including:

   a. Scope of cutting, patching, alteration or excavation.
   b. Trades to execute work.
   c. Products proposed to be used.
   d. Extent of refinish to be included.
   e. Date and time work will be uncovered.

C. Change of Products from Original Installation: Should existing products no longer be available; conditions of Work or schedule indicate a change of products from original installation, submit request for substitution as specified in Section 01630 Substitutions.

2. PRODUCTS

2.1 MATERIALS

A. Comply with specifications and standards for each specific product involved.

B. Where specifications are not included for items requiring patching, provide materials of equal or better quality than existing and finishes to match existing.

C. Provide new materials for cutting and patching unless otherwise indicated.

3 EXECUTION

3.1 EXAMINATION

A. Inspect existing condition of the Project, including elements subject to damage or movement during cutting and patching.

B. After uncovering work, inspect conditions affecting installation of products or performance of work.

C. Report unsatisfactory or questionable conditions to the Owner in writing; do not proceed with work until the Owner has provided further inspections.

3.2 PREPARATION

A. Provide adequate temporary support as necessary to assure structural value or integrity of affected portion of the Work.

B. Provide devices and methods to protect other portions of the Project from damage.

3.3 PERFORMANCE

A. Execute cutting by methods which will provide proper surfaces to receive repairs.

B. Execute excavating and backfilling by methods which will prevent settlement or damage to other work

C. Employ same installer or fabricator to perform cutting and patching work as employed for new construction for:

1. Weather-exposed or moisture-resistant elements.
2. Light-exposed finished surfaces.

D. Execute fitting and adjustment of products to provide finished installation to comply with specified products, functions, tolerances and finishes.

E. Restore work which has been cut or removed; install new products to provide completed work in accordance with requirements of Contract Documents.

F. Fit work tight to pipes, sleeves, ducts, conduits and penetrations through surfaces.

G. Refinish entire surfaces as necessary to provide even finish to match adjacent finishes:

1. For continuous surfaces, refinish to nearest intersection.
2. For an assembly, refinish entire unit.

END OF SECTION

CLEANING

SECTION 017400

1. GENERAL

   1.1 SUMMARY

      A. Section Includes: Execution of cleaning during construction and final cleaning prior to Certification of Substantial Completion.

2. PRODUCTS

   2.1 CLEANING MATERIALS

      A. Use cleaning methods and materials recommended by manufacturer of material being cleaned.

         1. Do not use materials which will create hazards to health or property, or which will damage surfaces.
         2. Provide covered containers for deposit of waste materials, debris and rubbish.

3. EXECUTION

   3.1 CLEANING DURING CONSTRUCTION

      A. Execute periodic cleaning to keep building, site and adjacent properties free of accumulations of waste materials, debris, rubbish, and wind blown debris resulting from construction companies.

         1. Prior to Substantial Completion remove construction tools, scaffolding, equipment, machinery and surplus materials.
         2. Broom clean and vacuum interior areas prior to start of surface finishing, and continue cleaning to eliminate dust.
         3. Schedule cleaning operations so that dust and other contaminants will not fall on or adhere to wet or newly-coated surfaces.
         4. Remove debris and rubbish from pipe chases, plenums, attics, crawl spaces, and other closed or remote spaces, prior to enclosing space.

      B. Store volatile wastes in covered metal containers and remove form premises daily. Prevent accumulation of waste which creates hazardous conditions. Provide adequate ventilation during use of volatile or noxious substances.

      C. Do not throw materials from heights. Open free-fall chutes not permitted. Terminate closed chutes into appropriate containers with lids.

      D. Collect and remove waste materials, debris, and rubbish from site periodically until execution of final cleaning and dispose off site in lawful manner.

         1. Do not burn or bury rubbish and waste materials on Project site. Do not dispose of volatile wastes or hazardous materials such as mineral spirits, oil, or paint thinner in storm or sanitary drains. Do not dispose of wastes into streams or waterways.

E. Conduct cleaning and disposal operations to comply with local ordinances and anti-pollution laws.

3.2 FINAL CLEANING

A. General: Comply with manufacturer's instructions.

1. Remove tools, construction equipment, machinery and surplus material from Project Site.
2. Employ experienced personnel or professional cleaning firm.

B. Cleaning: Clean exposed exterior and interior hard-surfaced finishes to dirt-free condition, free of stains, films and similar foreign substance.

1. Remove labels which are not required as permanent labels.
2. Clean glossy materials to polished condition; remove foreign substances.
3. Polish reflective surfaces to clear shine.
4. Glass and glazing:

a. Wash and clean mirrors and both sides of glass.
b. Remove putty and other substances which obscure vision.
c. Replace chipped, scratched and broken glass.

5. Clean concrete floors in unoccupied spaces.
6. Clean resilient flooring, stone flooring, tile, pavers, and other similar hard-surface flooring, including associated bases. Refer to individual Specification sections for requirements of sealing, buffing, waxing, and polishing.
7. Clean carpet and similar soft surfaces, removing debris, soil, and excess nap.
8. Clean exposed surfaces of equipment; remove excess lubrication.
9. Clean plumbing fixtures, drinking fountains, and similar equipment to sanitary condition.
10. Clean food service equipment to sanitary condition, ready and acceptable for its intended use.
11. Clean light fixtures and lamps; replace burned-out lamps.

C. Avoid disturbing natural weathering of exterior surfaces.

D. Heating, Ventilating, and Air Conditioning Systems: Clean permanent filters and replace disposable filters for units operated during construction.

1. Clean ducts, blowers, and coils for units operated without filters during construction.

E. Site: Clean areas disturbed by construction activities, including landscape areas, free of rubbish, litter, and foreign substances.

1. Sweep paved areas to broom clean condition.
2. Remove stains, spills and other foreign deposits.
3. Rake grounds that are neither paved nor planted to even-textured surface.

F. Remove waste, foreign matter, and debris from roofs, gutters, areaways and drainage systems.

G. Prior to final completion, conduct inspection of sight-exposed interior surfaces, exterior surfaces, and associated work areas to verify that entire Work is clean.

H. Maintain cleaning until Project, or portion thereof, is accepted by Owner.

END OF SECTION

CLOSEOUT PROCEDURES

SECTION 017700

1. GENERAL

1.1 SUMMARY

A. Related Sections:

1. Section 017800 – Closeout Submittals: Requirements for submittals at closeout.
2. Section 017839 – Project Record Documents

1.2 PREREQUISITES TO SUBSTANTIAL COMPLETION

A. Complete items in following paragraphs before requesting Certification of Substantial Completion, either for entire Work or for portions of Work.

B. Submit maintenance manuals, project record documents, and other similar final record data in compliance with Section 017800.

C. Conduct inspection to substantiate basis for request that Work is substantially complete. Create comprehensive list (initial punch list) indicating terms to be completed or corrected, value of incomplete or non-conforming work, reason for being incomplete, and date of anticipated completion for each item. Include copy of list with request for Certificate of Substantial Completion.

D. Submit statement showing accounting of changes to Contract Sum.

E. Advise Owner of pending insurance change-over requirements at final payment.

F. Obtain and submit releases enabling Owner's full, unrestricted use of Project and access to services and utilities. Include certificate of occupancy, operating certificates, and similar releases from authorities having jurisdiction and utility companies.

G. Deliver tools, spare parts, extra stocks of material, and similar physical items to Owner.

H. Make final change-over of locks and transmit keys directly to Owner. Advise Owner's personnel of change-over in security provisions.

I. Discontinue or change over and remove temporary facilities and services from Project site, along with construction tools, mock-ups, and similar elements.

J. Perform final cleaning in accordance with Section 017400.

K. Touch-up and otherwise repair and restore marred exposed finishes.

1.3 SUBSTANTIAL COMPLETION INSPECTION

A. When Contractor considers Work to be substantially complete, submit to Architect:

1. Written certificate that Work, or designated portion, is substantially complete.
2. List of items to be completed or corrected (initial punch list).

B. Within 14 days after receipt of request for Substantial Completion, Architect will make inspection to determine whether Work or designated portion is substantially complete following procedures indicated in Conditions of the Contract.

C. Should Architect determine that Work is not substantially complete:

1. Architect will promptly notify Contractor in writing, stating reasons for its opinion.
2. Contractor shall remedy deficiencies in Work and send second written request for Substantial Completion to Architect.
3. Architect will reinspect Work.

D. When Architect finds that Work is substantially complete, Architect will:

1. Prepare Certificate of Substantial Completion on AIA standard forms accompanied by Contractor's list of items to be completed or corrected as verified and amended by Architect and Owner (final punch list). If Contractor fails to generate initial punch list, or if Architect adds more than 500 items to the Contractor's list, or ten or more items per room on average, Owner will reimburse Architect for time spent in adding to or generating list, and will deduct amount of compensation from payment to Contractor.
2. Submit Certificate to Owner and Contractor for their written acceptance of responsibilities assigned to them in the Certificate.

E. After Work is substantially complete, Contractor shall:

1. Allow Owner occupancy of Project under provisions stated in Certificate of Substantial Completion.
2. Complete work listed for completion or correction within time period stipulated.

1.4 PREREQUISITES FOR FINAL COMPLETION

A. Complete items in following paragraphs before requesting final acceptance and final payment. List known exceptions, if any, in request.

B. When Contractor considers Work to be complete, submit written certification that:

1. Contract Documents have been reviewed.
2. Work has been examined for compliance with Contract Documents.
3. Work has been completed in accordance with Contract Documents.
4. Work is completed and ready for final inspection.

C. Submittals: Submit following:

1. Final punch list indicating all items have been completed or corrected.
2. Final payment request with final releases and supporting documentation not previously submitted and accepted. Include certificates of insurance for products and completed operations where required.
3. Specified warranties, workmanship/maintenance bonds, maintenance agreements and other similar documents.

4. Updated accounting statement for final changes to Contract Sum.
5. Consent of surety to final payment.

D. Perform final cleaning for Contractor soiled areas in accordance with Section 017400.

1.5 FINAL COMPLETION INSPECTION

A. Within 14 days after receipt of request for final inspection, Architect will make inspection to determine whether Work or designated portion is complete following procedures indicated in Conditions of the Contract.

B. In the event Architect considers Work to be incomplete or defective:

1. Architect will promptly notify Contractor, in writing, listing incomplete or defective work.
2. Contractor shall take immediate steps to remedy stated deficiencies and send second written request to Architect that Work is complete.
3. Architect will reinspect Work.

1.6 REINSPECTIONS

A. Should Architect have to perform reinspections due to failure of Work to comply with claims of completion made by Contractor, Owner will reimburse Architect for such additional services and will deduct amount of compensation from final payment to Contractor.

END OF SECTION

CLOSEOUT SUBMITTALS

SECTION 017800

1. GENERAL

1.1 SUMMARY

A. Related sections:

1. Section 017700 – Closeout Procedures: Procedures for substantial completion and final completion.
2. Section 017839 – Project Record Documents.

1.2 OPERATION AND MAINTENANCE DATE (MANUALS)

A. Operation and Maintenance Manuals: Prepare data in form of instructional manual in heavy-duty three-ring binders with durable plastic covers.

1. Where written instructions are required, use personnel skilled in technical writing to extent necessary for communication of essential data.
2. Where drawings or diagrams are required, use personnel capable of preparing drawings clearly in understandable format.
3. Examine for completeness.

B. Submittal: Submit two copies of completed volumes in final form after instructing Owner's personnel, but prior to request for Substantial Completion. This copy will be returned with Architect's comments. Revise as necessary prior to final submittal.

1. Prepare and insert additional data in manuals when need for such data becomes apparent during Owner's instruction.
2. Submit three copies of final volumes at time of request for Substantial Completion.
3. Label covers and spine of each binder with typed or printed title OPERATION AND MAINTENANCE MANUAL, title of project, and subject matter of binder when multiple binders are required.
4. Separate contents with tab dividers, logically organized with tab title clearly printed under reinforced laminated plastic tabs.

C. Manuals: Contain following:

1. Table of contents.
2. Directory listing names, addresses, and telephone numbers of Architect, Engineer, and Contractor.
3. List names, addresses and telephone numbers of subcontractors, suppliers, and service representatives, including local source of supplies and replacement parts.
4. General system or equipment description.
5. Copies of applicable shop drawings and product data.
6. Mark product data to clearly identify specific products and component parts.

7. Supplement product data with drawings necessary to illustrate relationship of component parts of equipment and systems, include control and flow diagrams.
8. Arranged by product, system, or process flow, and subdivided by Specification section. Identify following:

    a. Significant design criteria.
    b. List of equipment.
    c. System or equipment identification, including:

        1) Name of manufacturer.
        2) Model number.
        3) Serial number of each component.

    d. Parts list for each component.
    e. Operating instructions.
    f. Maintenance instructions and schedules for equipment and systems.
    g. Emergency instructions.
    h. Wiring and piping diagrams.
    i. Inspection and test procedures.
    j. Precautions against improper use and maintenance.

9. Copies of warranties.
10. Protective Plastic Jackets: Provide protective transparent plastic jackets designed to enclose diagnostic software for computerized electronic equipment.
11. Text Material: Provide manufacturer's standard printed material or typewritten specially prepared data.

    a. Provide text on 8-1/2 inches by 11 inches, 20 pound white bond paper.

12. Drawings and Diagrams: Provide reinforced punched binder tabs on drawings and bind in with text. Oversize Drawings:

    a. Fold drawings to same size as text pages and use as fold-out.
    b. Drawings too large to be used as fold-out, place folded drawing in front or rear pocket of binder. Insert typewritten page indicating drawing title, description of contents, and drawing location at appropriate location in manual.

1.3 MATERIAL AND FINISHES MAINTENANCE MANUAL

A. Manual: Submit four copies of each manual, in final form, on material and finishes to Architect for distribution.

    1. Provide one section for interior products, including applied materials and finishes, and second for products designed for exterior products.

B. Interior Products Maintenance Data: Provide manufacturer's data and instructions on care and maintenance of architectural products, including applied materials and finishes.

    1. Product Data: Provide complete information on architectural products, including following, as applicable:

a. Manufacturer's catalog number.
b. Size.
c. Material composition.
d. Color.
e. Texture.
f. Reordering information for specially manufactured products.

2. Care and Maintenance Instructions: Provide information on care and maintenance including manufacturer's recommendations for types of cleaning agents to be used and methods of cleaning. Provide information regarding cleaning agents and methods that could prove detrimental to product. Include manufacturer's recommended schedule for cleaning and maintenance.

C. Exterior Products Maintenance Data: Provide complete manufacturer's data with instructions on inspection, maintenance, and repair of products exposed to weather or designed for moisture-protection purposes.

1. Manufacturer's Data: Provide manufacturer's data giving detailed information, including following, as applicable.

a. Applicable standards.
b. Chemical composition.
c. Installation details.
d. Inspection procedures.
e. Maintenance information.
f. Repair procedures.

1.4 SPARE PARTS AND MAINTENANCE MATERIALS

A. Provide tools, spare parts, maintenance, and extra stock materials in quantities specified in individual Specification sections:

1. Deliver to Project site and place in location as directed; obtain receipt from subcontractors and suppliers

B. Submit letter at time of inspection for Substantial Completion listing items and quantities, attach receipts.

1.5 WARRANTIES AND BONDS

A. Disclaimers and Limitations: Manufacturer's disclaimers and limitations on product warranties do not relieve Contractor of warranty on Work that incorporates products, nor does it relieve suppliers, manufacturers and subcontractors required to countersign special warranties with Contractor.

B. Owner's Recourse:

1. Written warranties made to Owner are in addition to contractual, implied, and expressed warranties, and shall not limit duties, obligations, rights and remedies otherwise required by Contract Documents and available under law.

a. Warranties: Not deprive Owner of other rights Owner may have under other provisions of Contract Documents and Uniform Commercial code (UCC).

b. Warranties with disclaimer disallowing implied warranties of merchantability and/or fitness for particular purpose or other disclaimers that reduce Owner protection not acceptable.

c. If manufacturer's warranty disclaims implied or expressed warranties of merchantability and fitness, manufacturer shall remove that disclaimer and have authorized representative initial strikeout noting acceptance of warranty obligation.

2. Warranty periods shall not be interpreted as limitations on time in which Owner can enforce such other duties, obligations, rights, or remedies.

3. Rejection of Warranties: Owner reserves right to reject warranties and to limit selections to products with warranties not in conflict with requirements of Contract Documents.

C. Special Warranties:

1. Shall not deprive Owner of other rights Owner may have under other provisions of Contract Documents and shall be in addition to, and run concurrent with, other warranties made by Contractor under requirements of Contract Documents.
2. Commence on Date of Substantial Completion as defined in General Conditions unless specifically specified otherwise in particular specification section.

D. Time of Submittals:

1. Preliminary Review: Submit sample of warranty customized for Project with Product Data submittal.
2. Submit binders containing warranties, bonds, and maintenance/service contracts within 10 days after date of Substantial Completion.
3. For equipment or component parts of equipment put into service during construction with Owner's written permission, submit photo copies of documents within 10 days after acceptance listing date of acceptance as beginning of warranty period. Retain originals of executed documents for final submittal as indicated in subparagraph above.
4. For items of Work when acceptance is delayed beyond date of Substantial Completion, submit within 10 days after acceptance listing date of acceptance as beginning of warranty period.

E. Submittal: Submit warranties, maintenance bonds, and maintenance/service contracts as specified in various Specification sections:

1. Assemble data in heavy-duty three-ring binders with durable plastic covers.
2. Label cover and spine of each binder and typed or printed title WARRANTIES AND BONDS and title of Project.
3. Prepare table of contents in sequence of specification table of contents, with each item identified with number and title of Specification section in which specified, and name of product or work item.
4. Separate each warranty, bond, or service contract with tab and index sheets keyed to listing in table of contents. Provide full information, using separate typed sheets as necessary. List subcontractor, supplier, and manufacturer, with name, address, and telephone number of responsible principal.

5. Copies: Obtain warranties, bonds, and maintenance/service contracts executed in triplicate by responsible subcontractors, suppliers, and manufacturers. Include one copy of each warranty in Operations and Maintenance Manual, or in Material and Finishes Maintenance Manual.
6. Verify that documents are in proper form, contain full information, and are notarized.

1.6 EVIDENCE OF PAYMENTS AND RELEASE OF LIENS

A. Contractor's Affidavit of Payment and Debts and Claims: Submit on AIA Document G706.

B. Contractor's Affidavit of Release of Liens: Submit on AIA Document G706A with:

1. Consent of Surety to Final Payment: AIA G707.
2. Contractor's Release or Waiver of Liens.
3. Separate releases or waivers of liens from subcontractors, suppliers and others with lien rights against property of Owner, together with lost of those parties.

C. Execute submittals before delivery to Owner.

1.7 FINAL ADJUSTMENT OF ACCOUNTS

A. Final Statement of Accounting: Submit to Architect. Show adjustments to Contract Sum.

1. Original Contract Sum.
2. Additions and deductions resulting from:

a. Previous Charge Orders.
b. Allowances.
c. Unit Prices.
d. Deductions for uncorrected Work.
e. Deductions for inspection payments.
f. Other adjustments.

3. Total Contract Sum as adjusted.
4. Previous payments.
5. Retainage.
6. Sum remaining due.

B. Architect will prepare final Charge Order reflecting approved adjustments to Contract Sum which are not included in Charge Orders previously processed.

1.8 FINAL APPICATION FOR PAYMENT

A. Final Application for Payment: Submit in accordance with procedures and requirements stated in Conditions of the Contract.

END OF SECTION

PROJECT RECORD DOCUMENTS

SECTION 017839

1. GENERAL

1.1 SUMMARY

A. Related Sections:

1. Section 017700 – Closeout Procedures: Procedures for substantial completion and final completion
2. Section 017800 – Closeout Submittals

1.2 RECORDING

A. Post changes and modifications to record documents as they occur. Do not wait until end of Project. Architect will periodically review record documents to assure compliance with this requirement.

1.3 SUBMITTAL

A. Deliver record documents and samples in conformance with Section 017800 to Owner.

1. Include typed list identifying each item submitted as record document.

1.4 RECORD DOCUMENT REQUIREMENTS

A. Maintain at Project site record copy of:

1. Specifications and Schedules.
2. Contract Drawings.
3. Addenda.
4. Change Orders, Change Directives, Supplemental Instructions, and other modifications to Contract.
5. Approved Shop Drawings, Product Data, Samples, and similar required submittals.
6. Approved substitutions.
7. Reports of inspection and testing agencies.
8. Inspection certificates.
9. Manufacturer's certificates, manufacturer's instructions, and reports of manufacturer's field observations.
10. Samples.
11. Other items indicated in various sections within Division 1.

B. Documents:

1. Obtain from Architect, and pay reproduction costs for, one set of archival quality mylar Contract Drawings for recording changes and modifications.
2. Obtain from Architect, and pay reproduction costs for, one set of Specification Manuals for record purposes.

C. Store record documents and samples in field office apart from documents used for construction. Provide files and racks for secure storage.

1. Label and file documents and samples in accordance with section number listings in Specification Table of Contents. Label each item PROJECT RECORD DOCUMENT in stamped or printed letters in prominent location on each Drawing.

2. Maintain documents and samples in clean, dry, legible condition; do not use for construction purposes

D, Record information concurrently with construction progress.

E. Make documents available for review by Architect and Owner during construction period.

1.5 CONTRACT DRAWINGS AND SHOP DRAWINGS

A. Legibly mark drawings to record actual construction which varies appreciably from Contract Documents. Give particular attention to information on concealed elements which would be difficult to identify or measure and record later. Items required to be marked include but are not limited to:

1. Dimensional changes to Drawings.
2. Measured depths of foundation below first floor datum.
3. Measured horizontal and vertical locations of underground utilities and appurtenances, referenced to visible and accessible features of construction.
4. Measured locations of internal utilities and appurtenances concealed in construction, referenced to permanent surface improvements.
5. Revisions to routing of piping and conduits.
6. Revisions to electrical circuitry.
7. Actual equipment locations.
8. Duct sizes and routing.
9. Revisions to details shown on Drawings.
10. Details not on original Contract Drawings.
11. Changes made by Addenda, Change Orders, Construction Change Directives, Supplemental Instructions, and other issued modifications.
12. References to related Shop Drawings and other similar detailed modifications.

B. Mark-Up Procedures: Mark completely and accurately record prints of Contract Drawings or Shop Drawings, whichever is most capable of showing actual physical conditions. Where Shop Drawings are marked, show cross-reference on Contract Drawings location.

1. Mark record sets with red erasable pencil; use other colors to distinguish between changes for different categories of Work at same location.
2. Mark important additional information which was either shown schematically or omitted from original Drawings.
3. Record modifications caused by Supplemental Instructions, Construction Change Directives, Change Orders, Alternates, and similar modifications.
4. Accurately record information using consistent, understandable techniques.

5, Record data as soon as possible after it has been obtained. In case of concealed installations, record and check mark-up prior to concealment.
6. At time of Substantial Completion, submit Record Drawings to Architect for Owner's records. Organize into sets, bind and label sets for Owner's continued use.

C. Preparation of Transparencies: Immediately prior to request for Substantial Completion, review completed marked-up Record Drawings with Architect for format and clarity.

1. When authorized, prepare full set of corrected transparencies of Contract Drawings and Shop Drawings.
2. Incorporate changes and additional information previously marked on print sets. Erase, redraw, and add details and notations where applicable. Identify and date each Record Drawing.

D. Copies and Distribution: After completing preparation of transparency Record Drawings, print four blue-line or black-line prints of each Record Drawing, whether or not changes and additional information were recorded.

1. Organize copies into manageable sets.
2. Bind each set with durable paper cover sheets, with appropriate identification, including titles, dates and other information on cover sheets.
3. Organize and bind original marked-up set of prints that were maintained during construction period in same manner.
4. Organize record transparencies into sets matching print sets. Place these sets in durable tube-type drawing containers with end caps. Mark end cap of each container with suitable identification.
5, Submit marked-up record set, transparencies, and prints to Architect for Owner's records: Architect will retain one copy set as Informational Submittal in accordance with Section 01330.

1.6 SPECIFICATIONS

A. Legibly mark-up specification manuals to record actual construction, including:

1. Manufacturer, trade name, and model number if each product actually installed, including product options and approved substitutions.
2. Changes made by addenda.
3. Changes made by Change Order, Field Order, Supplemental Instructions, and other issued modifications.
4. Other matters not originally specified.
5. Submit to Architect at time of Substantial Completion as Informational Submittal.

END OF SECTION

CONCRETE FORMS

SECTION 031110

1. GENERAL CONDITIONS AND SPECIAL CONDITIONS

The General Conditions and Special Conditions are a part of this Section and the Contract for this work. They apply to this Section as fully as if repeated here.

1.1 DESCRIPTION

A. Work Included: Finish, install and remove forms for cast-in-place concrete including shoring and form supports.

B. Related Work Specified Elsewhere:

1. Formwork for concrete work beyond the building lines: See Sidewalks and Driveways.

2. Excavating, filling and backfilling: See Earthwork.

3. Forms and casting beds for precast concrete: See Concrete, Precast.

4. Patching and filling of form tie holes: See Concrete Finishes.

1.2 REFERENCES, CODES AND STANDARDS: The following references, codes and standards are hereby made a part of this Section and formwork shall conform to the applicable requirements therein except as otherwise specified herein or shown on the Drawings. Nothing contained herein shall be construed as permitting work that it contrary to code requirements.

A. ACI-347, Guide to Formwork for Concrete.

B. California Building Code, 2010 Edition.

1.3 ALLOWABLE TOLERANCES: Design, construct, set, and maintain the formwork so as to insure complete work within the suggested tolerance limits specified in ACI 117. See Concrete Finishes Section for traffic surface tolerances of slabs. For form offset tolerances, see table below:

Location	Standard Reference	Tolerance
Footings (not exposed)	ACI 117-4.5.4	Class D
Cast in place walls, slab soffits, beams, columns exposed to public view	ACI 117-4.5.4	Class B
All other cast in place not exposed to public view	ACI 117-4.5.4	Class C

2. PRODUCTS

2.1 MATERIALS

A. Earth Forms: Unless otherwise indicated or required by the Structural Drawings, concrete for footings may be placed directly against vertical excavated surfaces provided the material will stand without caving and provided that minimum reinforcing steel clearances indicated on Drawings are maintained and suitable provisions are taken to prevent raveling of top edges of sloughing of loose material from walls of excavation. Sides of excavation shall be made with a neat cut and the width made as detailed on Drawings. Concrete which is exposed to view on exterior shall be formed to a minimum depth of 6" below finished grade.

B. Wood Forms:

1. Exposed Concrete Not Otherwise Noted or Specified: APA Plyform, Grade B-B, Class I, Exterior, each piece grade marked.

2. Chamfer Strips, Reveals, and Score Marks: Clear Douglas fir or pine, selected straight, milled on all faces -or- extruded polyvinylchloride specially produced for concrete work, Vinylex Corp., Preco Industries, Vulcan Metal Products, or equivalent. Material usage shall be consistent for each application.

3. Unexposed Concrete Not Otherwise Specified: Of sufficient design and strength to hold concrete properly in place and alignment.

4. Framing: At Contractor option subject to meeting necessary strengths and surface tolerances.

C. Metal Forms: Specification to be issued as an addendum.

D. Form Release Agents:

1. Exposed Concrete Including Surfaces to Receive Paint: Chemically active type producting water insoluble soaps. Form release agents shall be delivered in manufacturer's sealed and trademarked containers and shall be guaranteed to provide clean, stain-free concrete release and not to interfere with future applied coatings and finishes. Release agents shall contain no petroleum solvents such as creosote, paraffin, waxes or diesel oil.

2. Concealed Concrete: Contractor option.

E. Form Sealer (Wood Forms): Burke "Form Sealer", or equivalent, and of a type which will not interfere with bond of applied finishes.

F. Form Ties: Metal, spreader type, removable to 1" from concrete face. Ties for exposed concrete shall be of same type throughout project. Wire ties and wood spreaders will not be allowed except that such devices may be permitted for footings, shallow foundations and similar other totally concealed below grade surfaces upon specific approval of Architect. Wood spreaders shall not remain in concrete.

G. Cold Joints (Slabs on Grade): Standard 24 ga. galvanized steel, keyed profile, sized to suit slab thickness.

3. EXECUTION

3.1 PREPARATION:

A. Vertical and Horizontal Controls: Establish and maintain necessary benchmarks, lines, or controls throughout construction.

B. Secure information and provide for openings, sleeves, chases, pipes, recesses, nailers, anchors, ties, inserts, and similar embedded items. Coordinate with concrete work for requirements governing embedment and sleeving of pipes and conduit.

3.2 CONSTRUCTION:

A. Formwork: - General: Construct wood forms of sound material, straight and rigid, thoroughly braced, mortar tight, and of such strength that the pressure of concrete and the movement of men and equipment will not displace them. Formwork deflection limits shall be per ACI 301. (l/240 for structural concrete, l/400 for architectural concrete) The design and engineering of formwork shall be the complete responsibility of the Contractor.

B. Plywood Forms for Exposed Concrete:

1. Plywood panels shall be clean, smooth, uniform in size, and free from damaged edges or faces (including holes other than those required for form ties). Use full size (4' x 8' or larger) panels wherever possible. Make plywood panel pattern regular and symmetrical, joints plumb or level, horizontal joints continuous. Block plywood edges which do not occur at bearing points in order to eliminate joint offsets.

C. Framing and Bracing: Framing, bracing and supporting members shall be of ample size and strength to safely carry, without excessive deflection (exceeding allowable tolerances), all dead and live loads to which formwork may be subjected, and shall be spaced sufficiently close to prevent any apparent building or sagging of forms.

D. Form Ties: Form ties shall be of sufficient strength and used in sufficient quantities to prevent spreading of the forms. Ties for exposed concrete surfaces shall be arranged symmetrically and shall be aligned both vertically and horizontally (do not stagger). Form ties are not permitted through sandblasted surfaces.

E. Camber:

1. Camber forms for slabs and beams as required to compensate for deflection or settlement due to closure of forms joints, settlement of mudsills, shrinkage of lumber, elastic shortening and/or deflection of form members. Positive means of adjustment (wedges or jacks) of shores and struts shall be provided to permit realignment or readjustment.

F. Forms for exposed concrete shall be constructed full height and width between indicated construction joints or emphasized joints in concrete surface and shall not be broken for pour or construction joints within these areas.

G. Construct forms no higher than 12" above the top of a pour or construction joint.

H. Construction Joints: Construction joints shall be in accordance with requirements of Concrete, Cast-In-Place Section. Confine construction or pour joints to rustication strip locations where they occur; where rusticated joints do not occur in a surface, provide a surfaced pouring strip where construction joints intersect exposed surfaces to provide straight line at joints. Prior to subsequent pour, remove strip and tighten forms. Construction joints shall have no "overlapping" or offsetting of concrete surfaces and shall, as closely as possible, present the same appearance as butted plywood joints. Joints in a continuous line shall be straight and true.

I. Cleanouts: Provide cleanouts along bottom of walls and columns or elsewhere as required to permit thorough cleaning of loose dirt, debris and waste material. Cleanout shall not be apparent on exposed concrete surfaces and no openings in the forms for cleanouts shall be made on surfaces to be sandblasted.

J. Chamfered Corners: In general, chamfer all corners for exposed concrete unless otherwise noted. Obtain chamfers by placing 3/4" x 3/4" nonstaining moldings in forms. Pieces shall be in longest lengths possible, joints mitered.

K. Score Lines: Where "score", emphasized or rustication lines are indicated on vertical surface, obtain such lines by accurate placement of moldings in forms. Pieces shall be in longest lengths practical with joints mitered.

L. Arrange forms to allow proper erection sequence and to permit form removal without damage to concrete.

M. Form Sealer: Wood forms for exposed concrete shall be sealed on contact faces and edges using specified form sealer in strict accordance with manufacturer's directions.

N. Form Release Agent: Thoroughly clean forms and coat with release agent prior to initial use and before each reuse. Apply release agent in strict accordance with manufacturer's directions and coverage recommendations avoiding starved areas or excessive applications. Apply release agents before reinforcing steel is placed.

O. Reuse of Forms: Do not reuse any form which cannot be reconditioned to "like new" condition. Control reuse of forms for exposed surfaces to provide surface of uniform color and texture without sharp demarcation between adjacent surfaces.

P. Waterproofing Conditions: Concrete surfaces to receive waterproofing materials shall be formed to provide a relatively smooth surface free of sharp corners, projections, and offsets at form joints. Depressions and voids shall permit satisfactory patching as specified under Concrete Finishes Section. Form ties shall not penetrate or damage applied waterproofing.

Q. Bases and Foundations: Whenever concrete bases or foundations are to be provided for equipment furnished by other trades, dimensions shall be verified for the equipment furnished before concrete is placed.

R. Prior to placement of concrete, remove dirt, debris, and foreign material from forms. Leave no wood in concrete except nailers.

3.3 REMOVAL OF FORMS AND FALSEWORK:

A. The removal of forms and falsework shall be carried out in such manner as to ensure the complete safety of the structure. Supports shall not be removed until members have sufficient strength to safely support their own weight and superimposed loading with proper factor of safety.

B. Forms for exposed concrete surfaces shall be removed in such a manner as to preclude damage to finish. Pinch bars and similar tools shall not be used for prying against exposed surfaces. Stripping shall commence at top edge or vertical corner where the use of wooden wedges is possible. Wedging shall be done gradually and shall be accompanied by light tapping on panels to loosen them. When free at one end, gradually loosen remaining area without jerking.

C. After concrete is placed, the following minimum times shall elapse before the

removal of forms or shoring:

1. Vertical Forms (Walls, Columns, Beam Sides): 24 hours.

2. Side Forms (Footings, Slabs on Grade): 12 hours.

3. Slab and Opening Soffits: Conventional Reinforcing: 3 days and 70% of design strength.

4. Beam Soffits: 3 days and 70% of design strength.

5. Re-shoring:

   Provide re-shoring of slabs and beams to distribute construction loads to floors which have achieved design strength. Submit re-shoring plan to Engineer for review.

D. Upon removal of forms, bolts, wires, clamps, rods, etc., not necessary to the work, shall be removed to a minimum of 1 inch from the surface. The Contractor shall so conduct his operations as to eliminate any danger of rust stains from form tie materials or other unprotected ferrous materials embedded in or adjacent to exposed concrete.

END OF SECTION

CONCRETE REINFORCEMENT

SECTION 032000

1. GENERAL CONDITIONS AND SPECIAL CONDITIONS

The General Conditions and Special Conditions are a part of this Section and the Contract for this work. They apply to this Section as fully as if repeated here.

1.1 SCOPE

A. Work Included: Furnish and install reinforcement for cast-in-place concrete and precast concrete.

B. Related Work Specified Elsewhere:

1. Reinforcement for concrete work: See Sidewalks and Driveways.

2. Reinforcement for concrete block masonry: See Concrete Block.

1.2 REFERENCES, CODES AND STANDARDS: The following references, codes and standards are hereby made a part of this Section and reinforcement shall conform to the applicable requirements therein except as otherwise specified herein or shown on the Drawings. Nothing contained herein shall be construed as permitting work that is contrary to code requirements.

A. Details and Detailing of Concrete Reinforcement, ACI 315, latest edition.

B. Manual of Engineering and Placing Drawings for Reinforced Concrete Structures, ACI 315R.

C. "Building Code Requirement for Reinforced Concrete", ACI 318. Latest edition.

D. "Manual of Standard Practice" published by CRSI, latest edition.

E. California Building Code, 2010 Edition

1.3 SOURCE QUALITY CONTROL: Refer to Quality Control Section for general requirement governing testing and inspection.

A. Reinforcing bars shall conform to ASTM A-615 or ASTM A-706.

B. Provide certified mill test reports for all materials to be installed on project.

C. The following is subject to Special Inspection as per California Building Code, Chapter 17. Costs therefore will be paid by the Owner.

1. Placement of reinforcing steel as required by CBC Chapter 17.

2. Installation of threaded couplers.

1.4 SUBMITTALS: Comply with requirements of Shop Drawings, Product Data, and Sample Sections.

A. Shop Drawings:

1. Fully detailed shop drawings, including bending schedules and bending diagrams, shall be submitted to the Architect for review. Shop drawings shall show placing detail and size location of reinforcing steel.

2. Shop drawings shall be of such detail and completeness that fabrication and placement at the site can be accomplished without the use of project or contract drawings for reference.

3. Contractor shall check architectural, structural, mechanical and electrical project or contract drawings for anchor bolt schedules and locations, anchors, inserts, conduits, sleeves, and any other items which are required to be cast in concrete, and shall make necessary provisions as required so that reinforcing steel will not interfere with the placement of such embedded items.

4. Reinforcing Steel shall not be fabricated or placed before the shop drawings have been reviewed by the Architect and returned to the Contractor. Review of shop drawings by the Architect will not relieve the Contractor of responsibility for errors or for failure in accuracy and complete placing of the work.

B. Mill Test Reports: Certified mill test reports (tensile and bending) for each heat and melt of steel shall be submitted to the Architect before delivery of any material to the job site. See requirements above under "Source Quality Control".

1.5 DELIVERY AND STORAGE: Deliver reinforcing to site properly bundled and tagged, and store so as to prevent excessive rusting of fouling with grease or any coating that will interfere with bond. Segregate so as to maintain identification after bundles are broken. Do not use damaged, reworked, or deteriorated material.

2. PRODUCTS

2.1 MATERIALS

A. Reinforcing Bars:

1. New, free of loose rust.

2. Billet Steel Bars: ASTM A615, Grade 40 for #3 bars and smaller, Grade 60 for #4 bars and larger.

3. Concrete Moment Frame Beams and Columns: Longitudinal reinforcing bars used in concrete beams and columns shall also meet the following requirements in accordance with CBC Chapter 19:

a. Low Alloy ASTM A706, or

b. ASTM A615, Grade 60 where:

1) The actual yield strength based on mill tests does not exceed the specified yield strength by more than 18,000 psi (retests shall not exceed this value by more than an additional 3,000 psi) and

2) The ratio of the actual ultimate tensile stress to the actual tensile yield strength is not less than 1:25.

B. Baugrid Reinforcement: Per ICBO ER-5192.

C. Welded Wire Fabric: Welded wire fabric shall be new, rectangular mesh, welded steel wire fabric, conforming to ASTM A185. Gage or diameter of wire and center-to-center spacing of wire shall be as indicated on the Drawings.

D. Tie Wire: #16 minimum, black and annealed.

E. Accessories: Metal or plastic spacers, supports, ties, etc., as required for spacing, assembling, and supporting reinforcing in place. Legs of accessories to be of type that will rest on forms without embedding into forms. Galvanize metal items where exposed to moisture or use approved other non-corrosive, non-staining supports. Use plastic or plastic coated accessories for supporting reinforcing where concrete soffits are exposed.

F. Headed Reinforcement: T-Headed Bars conforming to ASTM A-970 for bar size indicated on drawings, as manufactured by Headed Reinforcement Corporation, Fountain Valley, California or approved equal.

G. Inserts: Inserts for precast concrete as manufactured by Dayton Superior or approved equal.

2.2 FABRICATION

A. Comply with details on Drawings.

B. Where specific details are not shown or noted, do detailing and fabrication in conformance with or superior to requirements contained in the References, Codes and Standards Article.

C. Clean bars of loose rust, loose mill scale and any substance that may decrease bond. Bend bars accurately to details on reviewed shop drawings. Unless otherwise permitted by the Structural Engineer, bar shall be bent cold.

D. Shop fabricate reinforcement.

3. EXECUTION

3.1 PLACING

A. General: Reinforcing steel shall be placed in accordance with the Drawings and reviewed shop drawings and the applicable requirements of the References, Codes and Standards Articles. Install reinforcement accurately and secure against movement, particularly under the weight of workmen and the placement of concrete. Reinforcing partially embedded in concrete shall not be field bent except as shown on the Drawings or permitted by the Structural Engineer.

B. Reinforcement Supports:

1. Reinforcement shall be accurately located in the forms and held in place by means of supports adequate to prevent displacement and to maintain reinforcement at proper distance from form face. Supports and their placement shall comply with CRSI "Placing Reinforcing Bars". The use of wood supports and spacers inside the forms is not permitted except as noted in Concrete Forms Section.

2. Support reinforcement for on-grade slabs by wiring to precast concrete blocks spaced 3'-0" o.c. (maximum) both ways staggered. Size blocks so

that reinforcing is maintained at the center line of the slab.

C. Obstructions: Wherever conduits, piping, inserts, sleeves, etc., interfere with placing of reinforcing, reinforcing shall be maintained at the center line of the slab.

D. Tying: Reinforcing shall be rigidly and securely tied with steel tie wire at splices and at crossing points and intersections in the position shown. Tie wires, after cutting, shall be bent in such a manner that concrete placement will not force the wire ends to surface of exposed concrete.

E. Spacing: Where Drawings do not show the spacing of the reinforcing, the minimum clear spacing shall conform to CBC Sec. 1907.6.

F. Splicing: Make splices only at those locations shown on the Drawings or as approved by the Structural Engineer. Where Drawings do not show minimum laps, comply with requirements of CBC Chapter 19. Stagger splices in adjacent bars wherever possible.

G. Dowels: Dowels shall be tied securely in place before concrete is deposited. In the event there are no bars in position to which dowels may be tied, No. 3 bars (minimum) shall be added to provide proper support and anchorage.

H. Welding: Not permitted.

3.2 CLEANING

A. Reinforcement, at time of placing concrete, shall be free of any coating that would impair bond.

3.3 PROTECTIVE CONCRETE COVER

A. Except where indicated otherwise on the Drawings, the minimum concrete coverage for steel reinforcement shall be as specified in the California Building Code, Chapter 19, under Sec. 1907.7 "Concrete Protection for Reinforcement."

3.4 PLACEMENT TOLERANCES

A. Where placement tolerances are not indicated on the Drawings, applicable requirements of ACI 301 shall apply. Bars may be shifted as necessary to avoid interference with other reinforcing steel, conduits, or embedded items. If bars are shifted more than one diameter, or enough to exceed specified tolerances, the resulting arrangement of bars shall be subject to the Architect's acceptance.

3.5 NOTIFICATIONS AND INSPECTION

A. The Contractor shall notify the Engineer at least 48 hours ahead of each concrete pour, and no concrete shall be deposited until inspections required by the Uniform Building Code, Chapter 17, have been performed by the Owner.

3.6 CORRECTION BEFORE CONCRETE PLACEMENT

A. Capable steel workers shall be kept on the job during the placing of concrete, and they shall properly reset any reinforcement displaced by runways, workers, or other causes. Reinforcement shall not be bent after being partially embedded in hardened concrete.

3.7 DEFECTIVE WORK

A. The following reinforcing steel work will be considered defective and will be ordered by the Engineer to be removed and replaced by the contractor:

1. Bars with kinks or bends not indicated on Drawings.

2. Bars injured due to bending or straightening.

3. Bars heated for bending or straightening.

4. Reinforcement not placed in accordance with the Drawings and Specifications.

5. Reinforcement with corrosion or coatings which may impair bond with concrete.

END OF SECTION

POST-TENSIONING

SECTION 032300

1. GENERAL

1.1 DESCRIPTION

A. Work included: Provide labor, material, tools, equipment, appliances, transportation and services required to completely furnish and install post-tensioning for cast-in-place concrete, all as shown on the Drawings and herein specified, including but not limited to the following:

1. Furnishing, installation and stressing of post-tensioning tendons or strands.

2. Furnishing and installation of anchorages, distribution plates, spacers, and tendon enclosures.

B. Related Work Specified Elsewhere:

1. Concrete Forms.

2. Concrete Reinforcement (typical bars).

3. Concrete, Cast-In-Place.

4. Patching of blockouts for anchorage: See Concrete Finishes.

5. Tensioned strand barriers: See Cable Strand Barriers.

1.2 REFERENCES, CODES AND STANDARDS

The following references, codes and standards are hereby made a part of this Section and prestressing work shall conform to the applicable requirements therein except as otherwise specified herein or shown on the Drawings. Nothing contained herein shall be construed as permitting work that is contrary to code requirements.

A. "Building Code Requirements for Reinforced Concrete", ACI 318.

B. "Post-Tensioning Manual", published by Post-Tensioning Institute, latest edition.

C. California Building Code, 2010 Edition.

1.3 QUALIFICATIONS

Prestressing work shall be performed by an organization that has successfully performed previous installations of a major nature similar to the one involved in this Contract for a minimum of five (5) years.

1.4 SOURCE QUALITY CONTROL

A. Prestressing steel shall be tested for tensile strength and elongation at rupture. Two (2) tests (one from each end, 5'-0" long each) shall be made for each reel and shall be tagged for identification purposes. Each size of wire, strand or bar to be shipped

to the site shall be assigned an individual lot number and shall be tagged accordingly.

B. If adequate information concerning the suitability of prestressing system cannot be furnished to the Owner's Representative and Architect, the Owner's Representative and/or Architect may require tests to be made of the system. Contractor shall bear costs of these tests.

C. Tests shall be performed by Owner's testing agency.

D. Costs of testing will be paid by the Owner except that when tests reveal failure of materials to meet Contract requirements, costs for subsequent tests shall be paid by the Contractor.

E. Furnish materials and handling which testing agency requires for analysis. Samples so submitted shall be accompanied by vendor's certification that the samples are representative of the materials to be furnished.

1.5 SUBMITTALS

Comply with requirements of Shop Drawings, Product Data and Sample Section.

A. Shop Drawings: Including the following:

1. Tendon layout and dimensions locating tendons in horizontal plans at all points. Detail horizontal curvature of tendons at block-out and anchorages. Show openings in slabs and beams.

2. Provide tendon profiles showing chair heights and locations, and any required placement steel. Show clearly the location of each tendon and the method of tendon support.

3. Furnish details of reinforcement around stressing pockets, closures, and delay strips, or where interference with tendons may occur.

4. Anchorage details.

5. Include calculations of friction losses on shop drawings to determine that design forces are obtainable. The friction loss in post-tensioned steel shall be based on experimentally determined wobble (k) and curvature (u) coefficients, and shall be verified during stressing operations. The friction losses shall be calculated as described in ACI 318-95. In case the friction loss is too big to be compensated by stressing to maximum, provide additional tendons.

6. Show required elongation of each tendon at jacking point.

B. Manufacturer's Data:

1. Furnish complete prestressing procedure to include the following:

a. Jacking force and jack pressure.

b. Maximum temporary jacking force and jacking pressure.

c. Certified jack calibrations and method of jack identification (use no non-calibrated jack and pump combination on the job).

d. Method of determining slack, if any.

e. Method of determining anchor force, or force remaining in tendons after anchoring.

2. Furnish method of burning off excess tendon after anchorage.

3. Provide method of sealing tendons.

4. Provide manufacturer's written certification that post-tensioning materials are of strength specified.

C. Samples: Submit one sample, 30" long, of sheathed tendon and anchorage including all accessories note in this section, below (plastic tube extension and grease cap). Sample will not be returned.

D. When reviewed and returned, the shop drawings and data shall not be changed nor shall construction operations be deviated from, unless resubmitted and reviewed.

E. Review of details and construction operations will not relieve the Contractor of his responsibility for completing the work successfully in accord with Contract Drawings and Specifications.

1.6 PROTECTION

Prestressing steel shall be satisfactorily protected from rust or other physical damage prior to placement and shall be free from detrimental substances when tensioned.

2. PRODUCTS

2.1 MATERIALS

A. Prestressing Steel:

1. Prestressing steel shall be high-tensile cold-drawn wire strand conforming to ASTM Designation A416-99, Low Relaxation Grade, and additional requirements shown on the Drawings.

2. Wires shall be straightened, if necessary, to produce equal stress in all wires of wire groups or parallel-lay cables that are to be stressed simultaneously, or when necessary to ensure proper positioning in the enclosures.

3. Broken strands and strands showing fabrication defects shall be removed and replaced.

4. All prestressing steel within every group of the same type of members shall be of the same heat where practicable. All steel shall be assigned a heat number and tagged accordingly.

5. Unbonded tendons for post-tensioning shall be coated with a rust-preventive, lubricating mastic and enclosed in a sheath extending from anchor to anchor, that will permit the stressing of the tendons after the concrete has attained the proper strength. All torn and damaged wrapping

shall be repaired before placing concrete. Sheath shall fully envelope any exposed tendon.

B. Distribution Plates and Anchorages:

1. Post-tensioned prestressing steel shall be secured at the ends by means of approved anchoring devices which shall be of such nature that wires will not kink, break down or otherwise be damaged.

2. Anchorage devices shall hold the prestressing steel without slip of more than 1/8 inch at a load equal to the applied load on the wire at prestressing.

3. Distribution plates shall consist of welded steel or cast steel bearing assemblies that will permanently support and distribute the load from the anchoring devices and shall develop at least 95% of the minimum specified ultimate strength of the prestressing steel without exceeding anticipated set.

   a. The maximum concentrated bearing stress in the concrete shall not exceed that permitted in ACI 318.

   b. Bending stresses in the plates induced by the pull of the prestressing steel shall not exceed 20,000 psi for structural steel and 15,000 psi for cast steel, except as experimental data may indicate that higher stresses are satisfactory. For higher strength steel, corresponding stresses may be permitted.

   c. Materials shall meet requirements of ASTM A36 for structural shapes, or ASTM A148 for cast steel, or higher quality materials as required to meet stress requirements.

   d. Design, fabrication and erection shall meet the latest AISC Standards: Welding - AWS Standards including Qualification Test of Welders.

   e. Distribution plates may be omitted if the bearing area of any anchoring device is sufficiently large so that the local concentrated bearing compressible stresses do not exceed the stresses permitted above or cause local failure.

4. Couplers, if used, shall be of high-strength, stress relieved steel to be coupled.

C. Accessories:

1. Sheathing: Flexible polyethylene plastic of 25 mils minimum thickness installed over greased tendons prior to delivery.

2. Grease: Non-corrosive, high viscosity in compliance with Post-Tensioning Institute recommendations.

3. Tie Wire: Minimum 16 gage annealed type, or approved patented system.

4. Chairs, Bolsters, Bar Supports, Spacers: Size and shape for strength and support of reinforcement during tendon location, installation, and placement of concrete.

5. Polyethylene Tape: 10 mil thick (minimum) polyethylene tape used to repair torn sheathing.

3. EXECUTION

3.1 PLACEMENT

A. Inserts in concrete work shall be accurately installed and secured in place. This shall include prestressing items, such as enclosures, tubes, ducts, spacer bars, anchorage, etc. Architect's approval of any powder driven fasteners shall be obtained before proceeding with the work.

B. Post-tension tendons shall have a parabolic profile and shall conform to the control points shown on the Drawings. Dimensions locating this profile apply to the center of gravity of the tendon. Low points of the tendons are at mid-span unless otherwise noted.

C. Slight deviation in spacing of the slab tendons is permitted where required to avoid openings and inserts that are specifically located. Where locations of tendons seem to interface with each other, contact the Structural Engineer before moving any tendons.

D. Ducts, tendons and anchorages shall be firmly supported to prevent displacement during subsequent operations. They shall be placed with a tolerance of plus or minus 1/4" in concrete dimensions over 8" but not over 2', and plus or minus 1/2" in concrete dimensions over 2'. These tolerances apply separately to both vertical and horizontal dimensions and might be different for both directions.

E. Suitable horizontal and vertical spacers or chairs shall be provided as required to hold the tendons in true position. In slabs, chairs shall be placed at 36" maximum spacing or as required to properly support the tendon in the required profile. All tendons in a given pour shall be full length without splices or couplers. Plastic-tipped or stainless-steel-legged chairs shall be used on all exposed surfaces. Staples shall be installed in slabs greater than 5" thick to maintain support chairs in the proper location. Staples shall be removed from concrete surface after form removal.

F. Maximum spacing of slab tendons shall be eight (8) times the thickness of the slab but not greater than 42" except where otherwise noted on the Drawings.

G. Provide anchor bars behind all tendon anchorage. Use bar sizes as shown on Drawings.

H. Seal all tears in sheathing by spirally wrapping 2 (two) layers of polyethylene tape around the damaged or missing sheathing. Extend tape 4 inches beyond each end of damaged or missing sheathing.

3.2 FIELD CONTROL

A. All post-tensioning work shall be under the immediate control of a foreman experienced in this type of work, with a minimum 5 years experience as a foreman. He shall exercise close check and rigid control of all operations, as necessary for full compliance with the requirements. This person shall be named and shall furnish such proof-of-experience as the Architect may require. He shall be directly responsible for all phases of work as outlined herein, whether such work is performed by his own personnel or not. The named foreman shall be assigned to the job from start to finish, barring illness, injury or vacation.

B. In the event of difficulty or emergency, a responsible technical representative shall be available at the job site on four (4) hours notice.

3.3 STRESSING

A. Prestressing shall be done by methods and related equipment that are in conformance with generally accepted systems of prestressing. Approved variations of such generally accepted methods and equipment will be permitted provided equal results can be obtained.

B. The post-tensioning shall be accomplished after the concrete has attained a compressive strength of 3000 psi minimum as determined from tests on concrete cylinders. Stressing sequence shall be as noted in the Drawings.

C. Prestressing steel shall be stressed by means of hydraulic jacks, equipped with accurate reading calibrated hydraulic pressure gauges to permit the stress in prestressing steel to be computed at any time. A certified calibration curve shall accompany each jack. If inconsistencies between the measured elongation and the jack gauge reading occur, the jack gauges shall immediately be recalibrated.

D. Jacking from each end of the tendons shall be required when, in the opinion of the Structural Engineer, there is excessive friction between the prestressing steel and the enclosures. Proper allowance shall be made in any case for friction losses and one tendon shall be checked for friction losses at the start of post-tensioning.

E. The prestressing steel shall be anchored at an initial anchor force or stress that will result in the ultimate retention of the working or effective force or stress shown on the Drawings. In no case may the steel be tensioned above 80% of the ultimate strength of the wire, strand or bars. The anchor force shall not exceed 70% of the ultimate strength of the wire, strand or bar.

F. End bearing forces shall be uniformly distributed, or an end block properly designed and reinforced for induced stresses shall be provided.

G. Safety precautions shall be taken to prevent workers from standing directly behind, above or in front of the jacks.

H. Excess strand or tendon shall not be burned off until all tendons within one pour have been satisfactorily stressed and without permission of the Structural Engineer.

I. Cut off excess tendon inside face of concrete after stressing records have been approved. Apply grease cap to exposed anchorage.

3.4 TREATMENT OF ANCHORAGES

A. Paint exposed portion of anchor with Rust-oleum paint.

B. Grout fill jacking access port flush with surface of adjacent concrete.

3.5 FIELD QUALITY CONTROL

Refer to Quality Control Section for general requirements governing testing and inspection.

A. Inspections shall be performed by qualified testing agencies or individuals, as the Owner may require to establish the acceptability of the Work. Inspection services shall be retained by the Owner at his expense except that when inspections reveal

failure to meet Contract requirements, costs for subsequent inspections will be deducted from the Contract price.

B. Before any concrete is cast, an inspection of the strands and reinforcing shall be made. Ensure that the anchorages are aligned normal to the tendon.

C. Continuous inspection during stressing operations and certifications of compliance with Drawings and Specifications will be performed.

D. Records shall be kept of elongation after seating and maximum tension applied to each tendon. At the time of stressing the first member of each type, the stresses in the individual tendons shall be checked to establish a procedure for insuring uniform results.

E. The following is subject to Special Inspection as per Chapter 17 of the California Building Code.

1. Placement of tendons and reinforcing steel.

2. Placing of concrete for prestressed elements.

3. Stressing operations. Stressing records shall clearly indicate any tendon elongation that exceeds tolerance specified on structural drawings.

END OF SECTION

CONCRETE - CAST-IN-PLACE

SECTION 033000

1. GENERAL CONDITIONS AND SPECIAL CONDITIONS

The General Conditions and Special Conditions are a part of this Section and the Contract for this work. They apply to this Section as fully as if repeated here.

1.1 DESCRIPTION

A. Work included: Furnish and install cast-in-place concrete required for the project as shown on the Drawings and specified herein. This Section also includes:

1. Concrete for work specified in Mechanical and Electrical Divisions unless specifically included therein.

2. Grouting of structural steel setting plates and elevator sills (if required).

3. Grouting of bases and equipment not specified under other Sections.

4. Concrete fill for metal stairs and pipe guards (bollards).

5. Coordination with other trades with regard to requirements for special bases, sleeves, chases, inserts, finishes or provisions of any nature.

6. Curing of formed concrete surfaces.

7. Installation of anchor bolts, hangers, anchors, plates, inserts and miscellaneous metal or other materials embedded in concrete and which are furnished by other trades.

B. Related Work Specified Elsewhere:

1. Concrete work beyond the building lines: See Sidewalks and Driveways.

2. Aggregate base for slabs on grade: See Earthwork.

3. Concrete Forms (including erection, stripping and removal).

4. Concrete Reinforcement.

5. Concrete, Prestressed.

6. Finish for concrete surfaces including patching and curing of concrete (except curing of formed concrete): See Concrete Finishes.

1.2 REFERENCES, CODES AND STANDARDS: The following references, codes and standards are hereby made a part of this Section and concrete work shall conform to the applicable requirements therein except as otherwise specified herein or shown on the Drawings. Nothing contained herein shall be construed as permitting work that is contrary to code requirements.

A. "Building Code Requirements for Reinforced Concrete", ACI 318.

B. California Building Code, 2010 Edition

1.3 SOURCE QUALITY CONTROL: Refer to quality Control Section for general requirements governing testing and inspection.

A. Cement and Aggregates: Furnish to the Architect the following data:

1. Mill certificates from cement manufacturer certifying that cement meets Specifications and is suitable for purpose intended.

2. Proof of aggregate's compatibility with cement to be used and certification that aggregates meet Specifications. Owner reserves the right to have his testing agency perform any additional tests on cement and aggregates which may be deemed advisable.

1.4 ENVIRONMENTAL CONDITIONS

A. Cold Weather Requirements: Comply with ACI 306R, "Cold Weather Concreting".

B. Hot Weather Requirements: Comply with ACI 305, "Hot Weather Concreting".

2. PRODUCTS

2.1 MATERIALS

A. Cement: ASTM C 150, Type II. Cement shall be of same brand, type and source throughout Project.

B. Aggregates:

1. Concrete for Slabs on Grade, suspended slabs. ASTM C 33 from sources with proven history of successful use. Source shall be constant unless 10 days prior notice is given for approval after recheck of mix design.

a. Fine Aggregate: Felton, Olympia, or Seichelt sand, or approved equal.

b. Coarse Aggregate: Granite Rock Co., Kaiser Limestone or Kaiser Clayton or Seichelt.

c. Other aggregates may be submitted for use provided the concrete mix meets the following shrinkage criteria: .040% drying shrinkage (max.), as tested per Structural Engineers Association of California recommendation, May 1989.

2. Concrete for Precast Beams:

a. Regular weight aggregates, per ASTM C-33, or

b. Lightweight aggregates producing a unit weight of 110-115 pcf.

3. All Other Concrete: ASTM C 33 from sources with proven history of successful use. Source shall be constant unless 10 days prior notice is given for approval after recheck of mix design.

a. Fine Aggregate: Natural sand with sand equivalent of not less than 75 when tested per Test Method Calif. 217-E.

b. Coarse Aggregate: Fine grain, sound crushed stone, natural gravel, limestone or granite with cleanness value not less than 75 when tested as per Test Method Calif. 227.

C. Water: Clean and potable, free from impurities detrimental to concrete.

D. Color Admixture: Integral color pigment by Davis, LM Scofield or approved equal.

E. Admixtures: The use of admixtures shall be confined to those admixtures listed below. Admixtures containing chlorides are not permitted. Admixtures shall be batched in strict accordance with manufacturer's recommendations.

1. Chemical Admixtures:

a. Water Reducing Admixture: W.R. Grace Co. "WRDA-79", Master Builders "Pozzolith 200N" or Sika Chemical Corp. "Plastocrete 161". Admixture shall conform to ASTM C 494, Type A and shall not contain more chloride ions than are present in the municipal drinking water.

b. High-Range Water Reducing Admixture: W.R. Grace Co. "WRDA-19" or approved equal. Admixture shell conform to ASTM C494 Type F and shall not contain more cloride ions than are present in the municipal drinking water.

c. Air Entraining Agent: Air-entraining admixture conforming with ASTM C260 may be introduced into the mix. Air-entrainment shall not exceed 4 percent. Submit manufacturer's data to Architect for review.

d. Flyash: Pozzolanic admixtures, conforming with ASTM C618, Class F, with weight loss on ignition limited to 3%, may be utilized in mix designs where indicated on structural drawings. Maximum cement replacement shall be 25% by weight, unless otherwise noted on drawings.

2. Certification: Written conformance to above requirements and the chloride ion content of the admixture shall be submitted by the admixture manufacturer prior to review of mix designs by the Architect.

F. Expansion Joint Fillers: ASTM K 994, asphaltic compound strips, 1/2" thick unless otherwise noted, precut to proper size.

G. Non-Shrink Grout (Non-Metallic): Euclid Chemical Co. "Euco N-S", L&M "Crystex", Upco "Upcon", U.S. Grout Corp. "Five Star", Master Builders "Masterflow 713", or approved equal, nonmetallic, nonstaining, premixed grout having a compressive strength at 28 days of not less than 6800 psi, non-shrink at all flow levels.

H. Fiber reinforced grout: Non-shrink, complying with ASTM C1107, Dayton- Superior Sure-grip High Performance grout or approved equal. Fibers to be ½” long, 2 pounds per cubic yard minimum, “Fibermesh” be Synthetic Industries, “Control” by Nycon, Inc or approved equal.

I. Curing Compounds (Formed Concrete): Conform to requirements of Concrete Finishes Section (for Clear Curing and Sealing Compound).

2.2 MIXES:

A. Mix Designs:

1. Mix designs for concrete shall be Contractor-designed at his expense. Designs shall be prepared by a qualified agency approved by the Architect and Structural Engineer. Four (4) copies of mix designs shall be submitted for Architect's review at least 30 days prior to placing any concrete and shall indicate completely, brands, types and quantities of admixtures included. If concrete is to be placed by pumping, recommendations of ACI 304 shall be followed.

2. Mix designs shall be proportioned in accordance with Section 5.3, "Proportioning on the Basis of Field Experience and/or Trial Mixtures" of ACI 318. Submit mix designs for each class of concrete for review.

B. Structural Drawings indicate minimum compressive strengths, slumps, maximum size aggregates and minimum cement contents.

3. EXECUTION

3.1 MIXING: Concrete shall be ready mixed as per ASTM C 94. Equipment shall be adequate for the purpose and kept in good mechanical condition at all times.

A. The rate of delivery, haul time, mixing time and hopper capacity shall be such that mixed concrete delivered shall be placed in the forms within 90 minutes or 300 revolutions of the drum from the time of introduction of cement and water to the mixer. Any interruption in placing in excess of 90 minutes or 300 revolutions will be cause for shutdown of the work for the day and the wasting of any remaining mixed concrete in hoppers or mixers. In case such interruption occurs, the Contractor shall provide construction joints where and as directed and cut concrete back to such line, cleaning forms and reinforcing as herein specified. Delivery tickets shall show departure time from plants. Revolution counters shall be set at "0" and shall commence to operate when drum revolution begins after introduction of ingredients into the mixer.

B. No water shall be added to the mix after the initial introduction of mixing water for the batch except when, on arrival at the job site, the slump of the concrete is less than that specified. In this case, and only under the direction of the Special Inspector and with not more than one application per load, additional water may be added from the truck system to bring the slump within required limits. The drum or blades shall then be turned an additional 30 revolutions or more until mix is uniform.

C. Mixers shall be equipped with an automatic device for recording number of revolutions of drum or blades prior to completion of mixing operation.

D. Concrete shall be kept continuously agitated until discharged into the hopper at the job site.

3.2 PLACING

A. Absorbent forms shall be thoroughly wetted before concrete is placed. Aggregate base for slabs on grade shall be moist but not saturated when concrete is placed.

B. Placing of concrete shall be done immediately after mixing. No concrete shall be placed or used after it has begun to set and no retempering will be allowed. The method used in placing shall be such that concrete is conveyed to place and deposited without separation of the ingredients. No concrete shall be placed with a free unconfined fall in excess of six (6) feet. Concrete shall not be allowed to cascade through reinforcing steel in such manner as to promote segregation. Do not

support runways on reinforcing steel.

C. Splash or accumulations of hardened or partially hardened concrete shall be removed. Contact faces of forms for exposed concrete shall be protected from splash during placing of adjacent concrete. Concrete containing piping shall be placed in a manner that will prevent damage to pipes.

D. Deposit concrete in approximate horizontal layers not exceeding 24" in thickness, unless otherwise authorized. Placing of concrete shall be carried on in a continuous operation without interruption until placing of course, section, panel or monolith is completed.

E. Distribution of concrete shall be even and continuous and no placement joints shall show. Before a placement is started, make certain that adequate equipment, men, and concrete will be available to place in cycles which will permit proper and thorough integration of each layer of concrete. Upon stopping of a placement, the top surface shall be on a level. Points of deposit in walls shall be so spaced that it will not be necessary for concrete to flow laterally more than 24 inches.

F. No concrete shall be placed for any element until reinforcing for same is fastened in place nor until forms are complete. No concrete shall be placed before work that is to be embedded has been set. Notify other crafts so they may deliver anchor, inserts, etc., or other work to be embedded in ample time and also notify them when their assistance in setting is required. Reinforcing or other materials that have been set in place shall not be disturbed.

G. Conduit and pipes embedded in, or sleeved through, structural concrete shall comply with the requirements of UBC Section 1906.3. Sleeves for plumbing and mechanical pipes shall be placed so as not to impair strength of concrete or interfere with reinforcing bar placement. Multiple sleeve openings shall be placed no closer than three times diameter of the larger sleeve. Reinforcing clearances to sleeves shall conform to clearances specified for concrete surfaces. Sleeves and inserts will be provided and set under other Sections of the work.

H. Remove debris, mud and water from places to receive concrete.

I. Concrete splash and/or grout shall be removed from surfaces that will receive painter's finish.

J. Place no concrete in water unless written permission has been obtained from Structural Engineer.

K. Notify Owner's Representative, Architect and Structural Engineer 48 hours minimum prior to placing of any concrete.

3.3 VIBRATION AND CONSOLIDATION

A. Concrete shall be thoroughly consolidated by means of internal mechanical vibrators. Such consolidation shall be produced by placing the vibrator directly in concrete at 18" - 30" intervals for a period of approximately 5 to 15 seconds and withdraw slowly depending on the consistency of concrete. One vibrator will be required for each location where simultaneous placing takes place, to ensure thorough vibrating of all sections. Provide sufficient spare vibrators on the job so as to have them readily available in case any vibrator in use should suddenly cease to function properly. Where spare vibrators are employed, provide additional spares. Provide smaller diameter vibrators for areas with congested reinforcing steel. Under no condition shall vibrator be placed against reinforcing steel or attached to forms. Use no vibrators to transport material.

B. Vibrator shall be of the flexible immersion type having a frequency of not less than 8,000 rpm. Use and type of vibrator shall conform to ACI 309, "Recommended Practice for Consolidation of Concrete".

C. Spading will not be permitted on exposed concrete surfaces.

D. Voids and rock pockets shall be eliminated. Voids and rock pockets in exposed concrete may subject that portion to rejection.

3.4 CONSTRUCTION JOINTS

A. Placement of construction joints and the manner in which they are provided for shall be only as approved by Owner's Representative or as shown on the Drawings. Construction joints shall be few as possible and will not be permitted simply to save forms. Submit shop drawings of construction joints showing proposed locations and details. Submit to Architect prior to forming or placing concrete.

3.5 CURING: See Section 03360.

3.6 EQUIPMENT BASES: Verify sizes and shapes required by items specified elsewhere. Concrete bases for special equipment shall be installed in strict accordance with Drawing details and the specifications and recommendations of the equipment manufacturer.

3.7 EXPANSION JOINT FILLERS: Place filler material so that top of material is parallel to aligned uniformly 1/4" below adjacent concrete surface.

3.8 GROUTING

A. The grouting of steel base plates shall be performed as hereinafter specified and as a part of this Section.

B. Grout used for the grouting of base plates shall be non-metallic, non-shrink grout mixed and applied in strict accordance with manufacturer's directions.

C. Grouting of bases shall be carefully done so as not to leave any voids between the base plates and the concrete.

3.9 FIELD QUALITY CONTROL: Refer to Quality Control Section for general requirements governing testing and inspection.

A. Tests and inspections shall be performed by qualified individuals, engineering companies or testing laboratories who shall perform those special inspections required by Chapter 17 of the Uniform Building Code, those tests and inspections specified below and such other tests and inspections as the Architect or Owner may require to establish the acceptability of the work.

B. Testing and inspection services shall be retained by the Owner at his expense.

C. Furnish material and handling for test cylinders and any other samples which testing agency requires for analysis of concrete work.

D. Compression Tests: 4 compression test cylinders will be taken for each placement of 150 cu. yd. or fraction thereof of each class of concrete placed each day. Make, cure and store test cylinders as per ASTM C 31. For suspended slabs, one cylinder will be tested at 3 days for information; two at 28 days for acceptance; and one retained as a spare. For all other concrete, one cylinder will be tested at 7 days for information; two at 28 days for acceptance; and one retained as a spare.

E. Slump Test: Slump tests will be performed as per ASTM C 143 (slump cone) at time of taking test cylinders.

F. Testing agencies shall select and prepare samples taken at job site.

END OF SECTION

CONCRETE FINISHES

SECTION 033500

1. GENERAL CONDITIONS AND SPECIAL CONDITIONS

The General Conditions and Special Conditions are a part of this Section and the Contract for this work. They apply to this Section as fully as if repeated here.

1.1 DESCRIPTION:

A. Work Included: Finish required on exposed cast-in-place concrete surfaces including patching or repair of defective areas and all curing of cast-in-place concrete (except formed surfaces).

B. Related Work Specified Elsewhere:

1. Finish for concrete work beyond the building lines: See Sidewalks and Driveways.

2. Curing of formed concrete and expansion joint fillers: See Concrete, Cast-In-Place.

3. Caulking and Sealants.

4. Painting.

1.2 PROTECTION: Protect exposed surfaces including flat work as required to prevent damage by impact or stains.

2. PRODUCTS

2.1 MATERIALS:

A. Curing Compounds: ASTM C 309, Type 1, clear resin type free of oil, wax, grease, or other substance which might prove deleterious to any material to be applied to concrete and shall be approved by Environmental Protection Agency for use in the State of California and at this Project Site. Curing compounds for exposed slabs shall be a multi-purpose curing-hardener-sealer type equivalent to Sonneborn-Contech "Kure-N-Seal", L & H "Dress & Seal" or Protex "Triple Seal" and shall meet the above requirements.

B. Weakened Plane Joint Former: Burke Co. "Zip Strip Plastic Joint Former", or approved equal, two-part, rigid PVC plastic, depth equal to 1/4 of slab thickness (min.).

3. EXECUTION

3.1 CURING:

A. Curing Compound - General:

1. Follow directions and recommendations of compound manufacturer.

2. Application shall commence immediately following completion of specified finishing and/or following disappearance of surface "sheen".

3. When applying compound, the surfaces shall be damp but shall be free from standing water.

4. Surfaces shall be covered with a uniform and even film of compound, as supplied. Using pressurized spray equipment, lambswool applicator or short nap roller; apply in a single coat to achieve total coverage as recommended by manufacturer.

5. When curing compound is applied inside enclosed spaces, adequate mechanical ventilation shall be provided and maintained throughout the periods of application.

3.2 PATCHING AND REPAIR OF DEFECTIVE AREAS:

A. Within 3 days after stripping formwork, surface defects such as rock pockets, honeycombs, cracks, and holes exceeding 1/4" diameter shall be filled and patched. The Architect shall distinguish between concrete which requires replacement or repair and surface defects which require patching. Permission to patch any area shall not be construed as a waiver of the Architect's right to require complete removal of the defective work if the patching, in his opinion, does not satisfactorily restore the quality and appearance of the surface.

B. Areas to be patched shall have loose material chipped away and shall be thoroughly dampened for at least 6 inches entirely surrounding the patch. Coat areas with thin brush coat of fine sand-cement grout followed by patching mortar. Patching mortar shall be prepared of the same material and proportions as used for concrete, except that coarse aggregate shall be removed. Where exposed formed concrete is to remain unpainted, trial patches using combinations of white cement and cement used in concrete mix shall be allowed to set up in order to verify that the patching mortar shall match the color of the adjacent concrete surface. Water in the mix shall be kept to a minimum. Mortar shall not be retempered by adding water. Mortar shall be allowed to stand for one hour prior to use and shall be mixed to prevent setting. Mortar shall be compacted thoroughly into place and screeded to leave patch slightly higher than surrounding surfaces and then left undisturbed for 1 to 2 hours to permit initial shrinkage. Patch shall then be finished to match adjacent surfaces.

C. Form tie holes shall be patched and finished flush with adjacent surface. For holes passing entirely through walls, a plunger type "grease gun" or other suitable device shall be used to completely fill holes.

3.3 FINISHES:

A. Formed Surfaces:

1. Remove fins and projections, patch, and leave "as formed". Air bubbles or "bugholes" not exceeding 1/4" diameter need not be repaired.

B. Flatwork:

1. Unless otherwise noted or specified, slabs shall be finished monolithically. Floor slabs which are indicated as sloped to floor drains shall be sloped uniformly so as to provide positive drainage of the indicated areas. Special care shall be taken that a smooth, even joint is obtained between successive pours.

2. Tolerance: Minimum flatness of 20/17 overall value and 14/11 minimum local value.

3. Swirl-Float Finish (Typical for Vehicle Traffic and Parking Areas): Place, consolidate, strike off and level concrete slab to proper elevation. After concrete has stiffened sufficiently to permit the operation and water sheen has disappeared, surface shall receive a swirl-float finish using a magnesium or aluminum float so as to produce a uniform non-slip, non-skid surface having a swirl design.

4. Broom Finish: After the concrete has received a float finish, the surface shall be given a non-slip medium broom finish.

5. Trowel Finish: After the concrete slab has been float finished, the surface shall be troweled at least twice to a smooth, dense, uniform finish free of defects and blemishes. Jitterbugs shall not be used. No dry cement or mixture of dry cement and sand shall be sprinkled on the surface.

3.4 DEFECTIVE WORK: Finish which is not true to line and plane, which is not in conformance with specified finish and appearance requirements, which exceeds specified tolerances, which does not properly connect to adjoining work, which does not slope to drain and which has been improperly cured, will be deemed as defective. Defective work shall be repaired or removed and replaced as directed by the Architect with proper work meeting Drawing and Specification requirements and at no added cost to the Owner.

END OF SECTION

CONCRETE UNIT MASONRY

SECTION 042200

1. GENERAL CONDITIONS AND SPECIAL CONDITIONS

The General Conditions and Special Conditions are a part of this Section and the Contract for this work. They apply to this Section as fully as if repeated here.

1.1 DESCRIPTION

A. Work Included: Concrete block masonry including reinforcing, grouting and cleaning.

B. Related Work Specified Elsewhere:

1. Dowels to concrete: See Concrete Reinforcement.

2. Caulking and Sealants.

3. Painting.

4. Furnishing of bolts, anchors, etc., set in masonry: See other Sections of these Specifications.

1.2 REFERENCES, CODES AND STANDARDS: The following references, codes and standards are hereby made a part of this Section and masonry work shall conform to applicable requirements therein except as otherwise specified herein shown on the Drawings. Nothing contained herein shall be construed as permitting work that is contrary to code requirements.

A. California Building Code, 2010 Edition

1.3 SUBMITTALS: Comply with requirements of Shop Drawings, Product Data, and Samples Section.

1.4 DELIVERY, HANDLING AND STORAGE

A. Do not bring cementitious or other material to the site if it has become lumpy, caked, hardened or air slaked from absorption of moisture.

B. Handle blocks in manner to prevent chipping and breakage. Protect reinforcing steel from kinking and bending and from contamination with dirt, mud, oil and other foreign matter detrimental to bond.

C. Store materials where protected from weather, contact with soil, traffic and construction operations.

2. PRODUCTS

2.1 MATERIALS

A. Concrete Block: ASTM C 90, Type 1, medium weight or normal weight Grade N, two cell, double-open end and bond beam units where indicated or required.

1. Size: See Drawings.

2. Unit Weight: 115 to 135 pcf.

3. Max. Linear Shrinkage: 0.55%.

4. Min. Tensile Strength: 135 psi.

5. Color: As selected by Design Architect.

6. Texture: Smooth conventional and split face as selected by Design Architect.

B. Reinforcing Steel: Conform to requirements of Drawings and Concrete Reinforcement Section. Provide positioning devices or other approved means for maintaining vertical and horizontal reinforcing in the locations indicated on the Drawings. Devices shall occur at top and bottom of vertical steel and at intermediate points not to exceed 200 bar diameters or 10 feet.

C. Portland Cement: ASTM C 150, Type II, "Low Alkali". No masonry cement permitted.

D. Hydrated Lime: ASTM C 207, Type S.

E. Aggregates:

1. Setting Mortar Sand: ASTM C 144, with not less than three percent passing #100 sieve. Use same source throughout Project.

2. Grout Aggregate: ASTM C 404, size 1 for sand and size 8 for coarse aggregates (pea gravel).

F. Water: Clean and potable, free of impurities detrimental to mortar or grout.

G. Fiber Joint Filler: Asphalt saturated fiber type conforming to ASTM D 1751, 1/2" thick unless otherwise noted.

2.2 SETTING MORTAR

A. Type: M as per ASTM C 270.

B. Minimum Strength (psi at 28 days): See Structural Drawings.

C. Mixing: Measure materials accurately and machine mix in batch type mixer in which quantity of water can be accurately controlled. Use mixers of full sack (cement) capacity, split sack batches not permitted. Mix for at least 3 minutes after all materials are in drum. Empty mixer completely before loading each succeeding batch. Work mortar at frequent enough intervals to prevent separation of ingredients. Retemper only as necessary to replace water lost through evaporation. Do not use mortar after final set has begun.

2.3 GROUT

A. Type: Coarse as per ASTM C 476.

B. Minimum Strength (psi at 28 days): 2000.

C. Batching and Mixing: ASTM C 94 (transit mixed). Water shall be added as required

to provide a pourable consistency without segregation (approximately 9" - 11" slump).

3. EXECUTION

3.1 PREPARATION: Clean and roughen concrete at bonding surface, sandblasting where required. Bend dowels into proper alignment, straight and unkinked. Install preformed fiber joint filler between concrete columns and abutting concrete block walls so as to provide installation of sealant and back-up materials.

3.2 CONSTRUCTION

A. Construct concrete block masonry in accord with Reference Standards except where otherwise qualified or modified herein. Where standards conflict, assume the more stringent condition.

B. Bond Pattern and Joint Treatment: Common running bond with nominal 3/8" wide joints; compacted and tooled concave where exposed and struck flush where concealed. Block surfaces to receive waterproofing shall be smooth without ridges or projections, voids pointed, joints struck flush with face of block.

C. Masonry units shall not be wet prior to laying.

D. Set masonry units plumb, true to line, with level courses accurately spaced. Keep bond pattern plumb and in alignment full height of wall, corners and reveals plumb and true. Do not use line pins unless absolutely necessary and, if used, fill holes immediately with mortar when pin is withdrawn. Cut facing units with a power driven carborundum saw. No chipped faces, corners or edges permitted.

E. Lay block with head and bed joints solidly filled with mortar for a distance in from the face of the unit equal to the thickness of the face shell.

F. Provide cleanouts at bottom of grouted cells except that cleanouts are not required where height of grout pour is less than four feet. Where cleanouts are required to occur on exposed masonry surface, remove entire face shell.

G. Build in anchors, inserts, bolts, frames, etc., furnished by others, as the work progresses.

H. Lay blocks to preserve unobstructed vertical continuity of cells.

I. Remove overhanging mortar or obstructions from inside of cells to be grouted using high pressure jet stream or approved mechanical means.

3.3 GROUTING

A. Fill all cells with grout.

B. Grout spaces shall not be wet at the time grout is placed.

C. Spaces to be filled with grout shall be free from debris, mortar, etc., before filling.

D. Grout shall not be placed by high lift process until mortar in joints has set for 24 hours.

E. High-lift grout shall be poured in maximum lifts of 4 feet. At cessation of each lift, the grout in this lift shall be vibrated with a 3/4" flexible cable vibrator for the full height of the lift. Vibrator shall be placed in cells not to exceed 16" centers (in plan). When

top of wall is reached, alternately "top" and vibrate to complete the pour to top of wall. Succeeding lifts of grout shall be placed following an appropriate lapse of time for grout settlement and absorption of excess moisture.

F. Place high-lift grout using adequate grout pumps.

G. For such time as may be required immediately following grouting, keep walls flushed down with a pressure stream of clear water to completely remove laitance from exposed faces.

3.4 CLEANING: Clean work as it progresses keeping exposed finished portions of work free of soil and mortar stains. Use no acid cleaners.

3.5 FIELD QUALITY CONTROL:

A. Tests and inspections shall be performed by qualified individuals, engineering companies or testing laboratories who shall perform those tests and inspections specified below and such other tests and inspections as the Engineer or Owner may require to establish the acceptability of the Work. Testing and inspection services shall be retained by the Owner at his expense except that when tests or inspections reveal failure of materials to meet contract requirements, costs for subsequent tests and inspections will be deducted from moneys due to the Contractor.

B. Compressive Strength of Masonry: Conform to Chapter 21. 28 day minimum compressive strength (f'm) shall be 1500 psi. (see structural drawings for additional requirements)

END OF SECTION

METAL FINISHES

SECTION 005013

1. GENERAL CONDITIONS AND SPECIAL CONDITIONS

The General Conditions and Special Conditions are a part of this Section and the Contract for this work. They apply to this Section as if fully repeated here.

1.1 SCOPE

A. Work Included:

1. Anodizing.
2. PVDF coating.
3. Stainless steel finish.

B. Related Work not included in this Section:

1. Sections with Metals: Galvanizing.
2. Sections with Metals: Factory or shop applied primers for field painting or coating.
3. Section 087100 – Door Hardware: Hardware finishes.
4. Section 099100 – Painting.

1.2 REFERENCES

A. Reference Standard: In addition to requirements shown or specified, comply with applicable provisions of following:

1. NAAMM Metal Finishes Manual for finish designations and application recommendations.

1.3 SUBMITTALS

A. Comply with pertinent provisions of Section 013300.

B. General: Submit submittals of this section simultaneously with submittals of sections with components with finishes specified in this section.

C. Product Data: Submit following:

1. Product data for each coating.
2. Color charts for finish indicating manufacturer's colors available for selection.
3. Include samples of warranty customized for this Project.

2. PRODUCTS

2.1 PREPARATION

A. Sheet Steel to be Coated.

1. Mechanical Finishes: Complete mechanical finishes of flat sheet metal surfaces before fabrication. After fabrication, finish joints, bends, abrasions, and other surface blemishes to match sheet finish. Protect

mechanical finishes on exposed surfaces from damage by application of adhesive paper or other temporary protective covering, prior to shipment.

2. Surface Preparation: Solvent-clean surfaces in compliance with SSPC-SP1 to remove dirt, oil, grease and other contaminants that could impair paint bond. Remove mill scale and rust, if present, from uncoated steel in compliance with SSPC-SP5 (White Metal Blast Cleaning) or SSPC-SP8 (Pickling).
3. Chemical Pretreatment: Apply hot phosphate surface treatment to uncoated steel sheet to comply with SSPC-PT4.
4. Comply with SSPC-PA1 “Paint Application No. 1” for shop painting.

B. Protective Coatings: Do not use coatings containing lead.

1. Primed Carbon Steel: Touch-up with primer.
2. Galvanized Steel: Touch-up with primer.

C. Metal Patching Compound:

1. Two-part epoxy and metal filler, putty grade, composed of metal alloy blended with high molecular weight polymer.
2. Match base metal of putty to item being repaired.
3. Use steel based alloy for repairing cast iron.
4. Machinable after curing.
5. Paste consistency: Negligible slump a 1 inch thickness or less.
6. Shrinkage: Show no evidence of measurable shrinkage from plastic state to hardened state.
7. Manufacturers and Products:
   a. Ferrobond Steel and Cast Iron Patching Material, Abatron; Kenosha, WI.
   b. Super Metal 1111, Belzona, Miami, FL. Use only on steel or cast iron items.
   c. Bondo, Bondo/Mar-Hide; Medina, OH.

2.2 SHOP FINISHING

A. General: Apply finishes in factory after products are assembled.

B. Protect finish with factory applied protective covering prior to shipment.

1. Remove scratches and blemishes from exposed surfaces which will be visible after completing finishing process.
2. Finish accessories such as trim, flashing, screens, blank-off panels, and fasteners to match assembly.

2.3 ANODIZING

A. Anodizing: Comply with AAMA 611.

1. Aluminum entrances, storefronts, and windows: Clear anodized.
2. Fire Extinguisher Cabinets: Colored Anodized Finish; color as selected by Architect.

B. Clear Anodized: AA-M11C22A41, Architectural Class 1, nonspecular as fabricated mechanical finish, etched medium matte, clear anodic coating, minimum .07 mil thick.

C. Color Anodized: AA-M12C22A42 of A44 Architectural Class 1, nospecular as fabricated, etched medium matte, color anodic coating, minimum .07 mil thick.

2.4 FLUOROPOLYMER (PVDF) COATING

A. Manufacturers:

1. PPG Industries Inc., Delaware, OH and Springdale, PA.
2. Akzo Coatings, Inc., Columbus, OH.
3. Lilly Industries Inc., Indianapolis, IN.
4. Morton International, Inc. Chicago, IL.
5. Valspar Corporation, Garland, TX.

B. Fluoropolymer (PVDF) Coating: AAMA 2605.

1. Resin: 70 percent polyvinylidene fluoride (PVDF).
2. Substrate: Cleaned and pre-treated.
3. Primer: Manufacturer's standard epoxy or acrylic coating.
   a. Dry Film Thickness: Minimum 0.20 mil.
4. Topcoat: PVDF, Dry Film Thickness:
   a. Coil: 0.80 mil.
   b. Extrusion: 1.0 mil.
5. Color: As selected by Architect from manufacturer's full ranch of standard colors.

2.5 STAINLESS STEEL FINISH

A. Stainless Steel Finishes: ASTM A-480.

1. Protect finishes with factory applied adhesive backed covering.

2. Unless otherwise Scheduled or Indicated: No. 4 – General Purpose Polished, vertical grain.

3. EXECUTION

NOT USED

END OF SECTION

METAL DECK

SECTION 053100

1. GENERAL CONDITIONS AND SPECIAL CONDITIONS

The General Conditions and Special Conditions are a part of this Section and the Contract for this work. They apply to this Section as fully as if repeated here.

1.1 DESCRIPTION

A. Work Included: Provision of composite metal floor and roof decking with directly attached accessory items including, but not necessarily limited to the following:

1. Closure strips, cover pieces, sump pans and all related accessory items.

2. Reinforcing of openings and deck edges shown on structural drawings.

3. All miscellaneous supports required for the proper installation of metal decking and which are not shown on the drawings or specified elsewhere, to obtain concrete-tight deck.

4. Shear steel connectors on beam flanges.

B. Related Work Specified Elsewhere:

1. Steel members supporting decking.

2. Ledger angles and fasteners.

3. Cutting of openings other than those shown including reinforcing or flashing where required.

1.2 REFERENCES, CODES AND STANDARDS

A. Published specifications, standards, tests or recommended methods of trade, industry or governmental organizations apply to work of this section where cited by abbreviations noted below.

1. American Society for Testing and Materials (ASTM):

A-446 (1983) Specifications for Steel Sheet, Zinc-Coated (Galvanized) by the Hot-Dip Process, Structural (Physical Quality).

A-525 (1983) Specification for Steel Sheet, Zinc-Coated (Galvanized) by the Hot-Dip Process, General Requirements.

A-611 (1984) Specification for Steel Sheet, Carbon, Cold-Rolled, Structural Quality, Grade C.

2. California Building Code, 2010 edition.

3. American Institute of Steel Construction - "Specification for Design of Light Gauge Structural Members" - (AISC).

4. American Welding Society's "Structural Welding Code" (AWS D1.1-96).

5. AWS D1.3 "Specifications for Welding Sheet Steel in Structures".

1.3 QUALITY ASSURANCE

A. Welder's Qualifications: Welders shall be experienced and competent mechanics and shall be qualified for welding in light gauge metal in accordance with AWS.

B. Limitations of Hangerloads from Metal Decking: Conform to Article 3.3 of this Section.

1.4 SUBMITTALS

A. Manufacturer's literature describing products.

B. Samples: Only as requested by Owner.

C. Shop Drawings: Submit shop drawings prior to fabrication or shipping to show layout of deck, gauge, joint locations; type, location of welds; accessory items. Coordinate location of openings with Architectural, Mechanical etc. Drawings.

D. Certificates: Certify that materials meet requirements specified.

E. Welding:

1. Certification of welder's qualifications.

2. Welding Procedure: Submit descriptive data to illustrate welding procedures to be performed.

1.5 PRODUCT DELIVERY, STORAGE AND HANDLING

A. Deliver, store and handle decking in manner to prevent damage or deformation.

B. Discharge materials carefully, store on platform of pallets, and cover with tarpaulins or other suitable weathertight covering, to prevent water damage and rust. Do not dump onto ground.

C. Do not overload decking during construction period and do not use decking for storage or working platform prior to welding in position.

1.6 JOB CONDITIONS

A. Provide the Owner's Testing Agency with free access to places whether on or off the job site where materials are stores or fabricated, to places where equipment is stored or serviced, and to job site during times of installation.

B. Sequencing, Scheduling: Notify the Owner in sufficient time prior to fabrication, field welding or installation to permit testing and inspection without delaying work.

2. PRODUCTS

2.1 MATERIAL

A. Framing Components

1. Use US standard gauge structural quality steel conforming to ASTM A-611, Grade C to roll decking and fabricate in accordance with the American Institute of Steel Construction "Specification for Design of Light Gauge Structural Members."

2. Composite deck units shall be formed with deformations to provide a mechanical lock between concrete and steel deck.

3. Performance Requirements: Maximum deflection 1/360 of span under total load.

4. Decks: Side and end interlocking type decking; fabricated in 24 inches widths or greater.

B. Miscellaneous Steel Shapes: ASTM A36.

C. Touch-up Paint for Abraded Galvanizing: Zinc oxide or Zinc dust primer for galvanized metal.

D. Flashing and Closures: As recommended by the approved metal decking manufacturer for open ends at columns, walls, spandrels and openings as shown on the drawings.

E. Provide the gauge sheet steel cover plates as required to close panels and anywhere deck changes direction.

F. Welding Electrodes and Equipment: As recommended by deck manufacturer and approved for use by Building Department.

2.3 FABRICATION

A. Preparation:

1. Coordinate with other work supporting, contacting or adjoining metal decking and verify requirements for cutting out, fitting and attaching.

2. Verify dimensions and locations at site whenever construction progress permits.

B. General Requirements:

1. Fabricate in accordance with AISC unless specifically noted otherwise.

2. Shop-or field-cut units to fit around openings, along building perimeter and around columns.

C. Closure Strips: Fabricated from 16 gauge sheet steel for installation at ends, edges and around openings as required to prevent leakage of concrete.

D. Hanger Slots at Floor and Roof: Size approximately 1/4 by 3/8 inch and located three rows per sheet along low flutes at two foot centers.

E. Shear and Hold Down Lugs: provide 3/32 inch depth to achieve composite action decking and concrete fill.

2.4 SOURCE QUALITY CONTROL

A. The Owner's Testing Agency will:

1. Review mill analyses and certificates of compliance, and where certification is questionable, test materials to verify compliance.

2. Test materials for tensile and bending strength as described.

3. EXECUTION

3.1 INSPECTION

A. Examine construction to support decking and verify following:

1. That dimensions are correct.

2. That setting conditions are proper.

3. That means of attachment integral with support is correct.

B. Do not start installation until unsatisfactory conditions have been corrected.

C. Deck is to be furnished, spread and tack welded to coincide with the Steel Contractors erection schedule and in ample time for use as a work platform and as safety planking. Materials must be delivered to the project site in conformance with the project schedule.

3.2 INSTALLATION

A. General Requirements:

1. Install decking in accordance with drawings.

2. Provide and fasten in place by welding, flashings, closure strips, closure plates, and fastenings where shown and as required.

3. Perform shaping, cutting, drilling and fitting in manner to equal workmanship of shop fabrication.

4. Holes shall be cut by the deck erector to fit framed openings shown on the drawings. All other holes shall be cut by the trade requiring the hole under the supervision of the General Contractor and as approved by the Architect.

B. Layout:

1. Place and adjust units in final position prior to permanent fastening.

2. Install in straight, continuous rows with ribs at right angles to supporting members or in the direction indicated on the drawings.

3. Align ribs to be straight within 1/4 inch in overall length of decking.

4. Locate end joints over supporting members. Deck units shall be continuous for three or more spans where structural steel layout permits.

5. Locate butted ends tight at center line of structural support with positive, solid, complete bearing over full width of panel without deforming units. Insure not less than two inch bearing on support.

6. Locate extreme ends and edges over structural supports with positive, solid complete bearing over full width of support for full width or length of panel without deforming units.

C. Welding Procedure:

1. Perform welding in accordance with AISC and AWS D1.1.

2. Insure surfaces to receive weld metal are clean and dry.

3. Weld metal deck to supports and fasten side laps of metal deck as required on General Notes, Sheet S1.1.

D. Opening Reinforcement:

1. Opening reinforcement shall be as detailed on the drawings. Cutting of holes other than those detailed on the drawings shall be done only as specifically approved by the Engineer. Holes not shown on Structural Drawings shall be cut and reinforced in accordance with details on Drawings under this section but shall be located and paid for by trade requiring openings. In general, reinforcing is not required for holes less than four inches in diameter.

2. Provide sub-framing to support deck at openings larger than four inches in any dimension, and as shown on the drawings.

3.3 HANGERLOAD LIMITATIONS

A. General:

1. The Contractor shall coordinate and supervise the location of all hanger devices fastened to, from, or through the metal decking.

2. The Contractor shall verify that all such hanger devices conform to the load and location limitations noted below under B and C, and as otherwise noted in other sections of these specifications.

B. Prior to placing concrete fill on the metal deck, the suspended load with anchoring method and location shall be as follows:

1. Maximum load on one wire hanger, through field-punched hole in metal deck, with pigtail end for embedment in future fill shall be 40 pounds.

2. Loads, not conforming to the weight noted above, shall be suspended from the structural steel framing. Contractor shall provide additional framing and submit details for review by the Architect.

C. After placing concrete fill:

1. Shot or drilled anchors are not permitted unless approved by Engineer.

2. If required transfer all loads to structural steel framing by providing additional steel framing as noted under B.2 above.

3.4 FIELD QUALITY CONTROL

A. The Owner's Testing Agency will:

1. Provide inspection of welding, including prior fit-up, welding equipment, weld quality and welder certification.

2. Provide inspection during installation as required to establish conformity of work with requirements.

3.5 CLEANUP AND DISPOSAL OF WASTE MATERIALS

A. Clean all surfaces as necessary for proper application of structural concrete.

B. After erection, touch-up all welds and abraded areas with paint.

C. Remove all waste from the site as a result of work in this section.

END OF SECTION

METAL FABRICATIONS

SECTION 055000

1. GENERAL CONDITIONS AND SPECIAL CONDITIONS

The General Conditions and Special Conditions are a part of this Section and the Contract for this work. They apply to this Section as fully as if repeated here.

1.1 DESCRIPTION

A. Work Included: Items of structural steel and miscellaneous metal and related accessory items required for the Project and which are not specified elsewhere. Such items include but are not limited to:

1. Items of structural steel.

2. Metal connectors requiring special fabrication.

3. Metal railings (handrails and guardrails) and brackets

4. Bollards.

5. Angle supports for elevator sills.

6. Sleeves for miscellaneous metal items.

7. Grouting required for setting miscellaneous metal items.

B. Related Work Specified Elsewhere:

1. Gratings for site drainage structures (beyond building lines) are a part of the site work.

2. Grout for structural steel setting plates: See Cast-In-Place Concrete.

3. Strand Barriers: See Cable Strand Barriers.

4. Metal stud framing and furring systems: See Furring and Metal Studs.

5. Finish painting: See Painting.

1.2 REFERENCES, CODES AND STANDARDS: The following references and standards are hereby made a part of this Section and structural steel and miscellaneous metal work shall conform to the applicable requirements therein except as otherwise specified herein or shown on the Drawings. Nothing contained herein shall be construed as permitting work that is contrary to code requirements or governing rules and regulations.

A. "Specification for the Design, Fabrication and Erection of Structural Steel for Buildings", of American Institute of Steel Construction, Eighth Edition with current supplements.

B. "Structural Welding Code-Steel", AWS D1.1 of the American Welding Society, with current supplements, revisions and addenda.

C. "Pipe Railing Manual", published by National Assn. of Architectural Metal Manufacturers (NAAMM).

D. Steel Structures Painting Council (SSPC) Surface Preparation Specifications (Vol. 2, Painting Manual).

E. California Building Code, 2010 edition

1.3 QUALIFICATIONS: Welding procedures, welders, and tackers for structural metal work shall be qualified in accord with CBC Standard 27-6.

1.4 SUBMITTALS: Comply with requirements of Shop Drawings, Product Data and Samples Section.

A. Shop Drawings: Shop drawings shall show dimensions, sizes, thicknesses, gages, finishes, joining, attachments, and relationship of work to adjoining construction. Where items must fit and coordinate with finished surfaces and/or constructed spaces, take measurements at site and not from Drawings. Where materials must be set to exact locations to receive work, furnish assistance and direction necessary to permit other trades to properly locate their work. Where welded connectors and inserts are required to receive work, shop drawing shall show exact locations required, and such drawings shall be furnished to the trades responsible for installing the connectors or inserts. Catalog work sheets showing illustrated cuts of item to be furnished, scale details and dimensions may be submitted for standard manufactured items. Indicate welds by AWS A2.0 "Welding Symbols".

B. Proof of Compliance: Unless otherwise noted, submit the following in four (4) copies.

1. Certified ladle analysis for steel used for structural purposes.

2. Certified reports of tensile properties and bend tests for steel shapes, bars and plates used for structural purposes.

3. Certificates of conformance for steel tubing where used for structural purposes.

C. Samples: Submit for selection and approval of enamel finish for metal grid grillwork.

2. PRODUCTS

2.1 BASIC MATERIALS AND ACCESSORIES

A. Standard Structural Steel Shapes, Bars and Plates: ASTM A 36-84a.

B. Architectural and Miscellaneous Steel Items: ASTM A 283-85, grade optional.

C. Steel Tubing: ASTM A 500-84, welded or seamless, grade as required for proper strength except that where used structurally, tubing shall have a strength of not less than Fy = 46 ksi.

D. Steel Pipe: ASTM A 53-86, Type E or S, Grade B for structural pipe; Grade A or Type F for railings where bending is required.

E. Fastenings (General): Furnish Bolts, nuts, screws, clips, washers and any other fastenings necessary for proper erection of items specified herein. Use stainless steel or hot dip galvanized on exterior. On interior, match adjacent material.

F. Welding Electrodes: As permitted by AWS Code D 1.1. Where exposed and unpainted, select filler metal to match base metal.

G. Paint (Primer): Fed. Spec. TT-P-86, Type II or TT-P-645 (zinc chromate).

H. Non-Shrink Grout: Sauereisen No. F-100, Euclid "Euno NS", Upco "Upcon", 5-Star, Master Builders "Masterflow 713", or approved equal, non-metallic, non-staining, premixed grout having a min. compressive strength of 6,800 psi (28 days).

I. Anchor Cement: Quick setting type conforming to ASTM C 595-86, factory prepared with accelerator.

2.2 FINISHES: Where used in this Section, "Exterior" shall be construed to include all exposures except within totally enclosed spaces.

A. Exterior Ferrous Metal Not Otherwise Specified and Interior Ferrous Metal Exposed to Continuing Moisture: Welds, burrs, and rough surfaces ground smooth after fabrication and completed assembly hot dip galvanized. Exceptions are:

1. Castings: Smooth shot blasted finish with one coat of shop primer.

B. Interior Ferrous Metal: Welds, burrs, and rough surfaces ground smooth and completed assembly cleaned and given one shop prime coat of paint.

C. Exposed Fastenings: Match color and finish of adjacent material.

2.3 FABRICATION - STRUCTURAL STEEL

A. Fabricate items of structural steel in accord with applicable provisions of Section 1.23 - Reference Standard 1.02A, California Building Code and with modifications and other specific requirements described herein.

B. Fabricate and assemble structural steel in the shop to the greatest extent possible. Do shearing and flame cutting carefully and accurately using machine equipment where possible.

C. Structural connections shall be welded or bolted as indicated. Shop connections not otherwise shown shall be welded. Eccentric connections are not permitted unless shown in detail on shop drawings.

D. Provide bearing plates for members bearing on masonry and concrete.

E. Drift pins may be used for assembling parts provide metal is not distorted or holes enlarged. Holes requiring enlargement to admit bolts shall be reamed. Misaligned holes will subject members to rejection.

F. No gas cutting of structural steel will be allowed without prior written approval of Architect.

G. Structural Welding:

1. Perform welding in accord with appropriate Sections of Reference Standards 1.01A and 1.02B and governing building code.

2. Unless otherwise noted or permitted, do welding by shielded arc method.

3. In addition to specific requirements of Drawings, details of welded joints shall comply with requirements for joints which are accepted without

qualification tests under the AWS Structural Welding Code.

4. Preparation of Surfaces: Surfaces to be welded shall be free of loose scale, slag, rust, grease, paint, and any other foreign material.

5. Welding Equipment: Welding equipment to be used in each case shall be acceptable to welding inspector. Use equipment with suitable devices to regulate speed and manually adjust operating amperage and voltage. The amperage capacity shall be sufficient to overcome line drop and to give adequate welding heat.

3. EXECUTION

3.1 CONDITION OF SURFACES: Inspect surfaces to receive metal work and report any defects which would interfere with the installation. Starting work implies acceptance of surfaces as satisfactory.

3.2 WORKMANSHIP

A. General Requirements:

1. Erect items of structural steel in accord with applicable provisions of Reference Standard 1.02A, California Building Code, and with Modifications and other specific requirements described herein.

2. Verify measurements at job.

3. Coordinate metal work with adjoining work for details of attachment, fittings, etc. Do cutting, shearing, drilling, punching, threading, tapping, etc., required for metal or for attachment of adjacent work. Drill or punch holes; do not use cutting torch. Shearing and punching shall leave true lines and surfaces.

4. Conceal fastenings where practicable. Thickness of metal and details of assembly and supports shall give ample strength and stiffness. Form joints exposed to weather to exclude water.

5. Make permanent connections in ferrous metal surfaces using welds where possible; do not use bolts or screws where they can be avoided.

6. Provide lugs, clips, anchors and miscellaneous fastenings necessary for the complete assembly and installation.

7. Set work plumb, true, rigid, and neatly trimmed out. Miter corners and angles of exposed moldings and frames unless otherwise noted.

8. Do grouting of frames, plates, bolts, and similar items with non-shrink grout.

9. Set railings and similar items shown or required to be set in concrete in sleeves with molten lead or quick-setting anchor cement. Where anchor cement is utilized, prepare and use cement in accord with manufacturer's directions. Unless otherwise noted, sleeves shall be not less than 5" long and shall be sized for approximately 1/4" clearance all around. Brace railings until lead or cement sets. Remove excess and leave 1/8" build-up sloped away from post.

10. Castings subject to foot or vehicular traffic shall have bearing surfaces machined to prevent rocking and rattling. Cast iron gratings and manhole

frames shall be bolted or otherwise securely fastened to frames prior to installation in concrete and shall remain so until concrete has set.

11. Where items must be incorporated or built into adjacent work, deliver to trade responsible for such work in sufficient time that progress of work is not delayed. Be responsible for proper location of such items.

12. Protect dissimilar metals from galvanic corrosion.

B. Welding:

1. Perform welding in accord with AWS Code D 1.1.

2. Welds shall be made only by operators experienced in performing the type of work indicated.

3. Welds normally exposed to view in the finished work shall be uniformly made and ground smooth.

4. Where welding is done in proximity to glass or finished surfaces shall be protected from damage due to weld sparks, spatter, or tramp metal.

C. Bolted, Screwed, and Riveted Connections:

1. In general, use bolts for field connections only and then only as detailed. Provide washers under heads and nuts bearing on wood. Draw nuts tight and upset threads of permanent connections to prevent loosening. Use beveled washers where bearing is on sloped surfaces.

2. Where screws must be used for permanent connections in ferrous metal, use flat head type, countersunk, with screw slots filled and finished smooth and flush.

3. Where rivets are used, they shall be machine driven, tight, heads centered, countersunk, and finished flush and smooth.

D. Surface Treatment and Protective Coatings:

1. Cleaning: Thoroughly clean mill scale, rust, dirt, grease and other foreign matter from ferrous metal prior to any galvanizing or painting. Conditions which are too severe to be removed by hand cleaning methods shall be cleaned as per SSPC "Surface Preparation Specifications", "Solvent Cleaning, SSPC-SP 1"; "Power Tool Cleaning, SSPC-SP 3"; or "Brush-Off Blast Cleaning, SSPC-SP7", as required.

2. Painting: After material has been properly cleaned and treated, apply shop prime coat of paint to all surfaces except those encased in concrete or masonry. Apply paint as per manufacturer's directions. Spot paint abrasions and field connections after assembly. Shop coat shall be dry prior to shipment to job site. Unless otherwise specified or directed, do not apply shop prime coats or any stenciled or painted identification markings to any galvanized surfaces.

3. Galvanizing: Conform to ASTM A 123-84 for rolled, pressed and forged shapes, plates, bar and strip and assembled steel products and A 153-82 for hardware items. Conform to ASTM A 384-76 and A385-80 (Recommended Practices) pertaining to galvanizing assembled steel products. Unless otherwise permitted, do galvanizing after fabrication, in

largest sections practicable. Where galvanizing is removed by welding or other assembly procedure, touch-up welds and abraded areas with zinc-rich paint.

3.3 PROTECTION AND CLEANING: Remove soil and foreign matter from finished surfaces and apply such protective measures as may be required to prevent damage or discoloration of any kind until acceptance of Project. Protection of work and initial cleaning shall be the responsibility of each installer or erector until the installation is finally completed, whereupon the responsibility for subsequent protection and final cleaning shall pass to the General Contractor for the entire Project.

3.4 QUALITY CONTROL

A. Tests and inspections of structural steel work shall be performed by qualified individuals, engineering companies or testing laboratories who shall perform those special inspections required by Section 306a of the California Building Code, those tests and inspections specified below and such other tests and inspections as the Architect or Owner may require to establish the acceptability of the work. Testing and inspection services shall be retained by the Owner at his expense except as follows:

1. When tests or inspections reveal failure of materials to meet contract requirements, costs for subsequent tests and inspections will be deducted from the Contract Price.

2. Costs made necessary by excessive inspection time shall be deducted from the Contract Price.

B. Where certified analysis and/or test reports required under "Submittals" are not furnished, or where inspecting agency cannot identify the material or where the source is questionable, material will be treated to determine compliance with Specifications. Costs of tests therefore shall be paid by the Owner but deducted from the Contract Price.

C. Inspection of shop and field welding shall be in accord with AWS Code and Chapter 17 of the California Building Code.

D. Material required for laboratory tests shall be furnished by Contractor, free of additional charges, FOB the testing laboratory.

END OF SECTION

METAL STAIRS

SECTION 076200

1. GENERAL CONDITIONS AND SPECIAL CONDITIONS

The General Conditions and Special Conditions are a part of this Section and the Contract for this work. They apply to this Section as if fully repeated here.

1.1 SCOPE

A. Work Included: All labor, materials, and equipment required to design, engineer, furnish, fabricate, prime, deliver and install all items required to complete the following:

Metal stairs, risers, treads and landings [concrete filled], complete with railings, guard rails, handrails, brackets and sockets, anchors, connectors, and related accessory items complete, as indicated for a design-build installation.

B. Work not included in this Section:

1. Section 033000 - Cast-in-place Concrete.
2. Section 055000 - Metal Fabrications
3. Section 099100 - Painting

1.2 SUBMITTALS

A. Comply with pertinent provisions of Section 013300.

B. Product Data: Submit manufacturer's product data for all standard pre-manufactured items.

C. Design Calculations: Submit stair calculations showing compliance with design load criteria, stamped and signed by a licensed California Engineer as evidence of compliance only, but not for approval.

D. Shop Drawings: Submit shop drawings stamped and signed by the licensed California Engineer responsible for the calculations of all items for review before fabrication and installation. Indicate profiles, sizes, connection attachments, reinforcing, anchorage, size and type of fasteners, and accessories. Include erection drawings, elevations and details where applicable. Indicate welded connections using standard AWS welding symbols. Indicate net weld lengths.

1.3 QUALITY ASSURANCE

A. Standards: Comply with the following applicable standards:

1. California Building Code (CBC) 2010 edition.

2. AISC, "Specification for the Design of Cold-Formed Steel Structural Members."

3. American Welding Society (AWS), "Structural Welding Code, D1.1."

4. Steel Structures Painting Council (SSPC).

B. Design Loads:

1. Stairs: Fabricate and install for minimum 100psf uniform live load and 300 pound concentrated live load with deflection not greater than L/480.

2. Handrails and Guardrails: Fabricate and install to meet OSHA requirements to withstand a live load of at least 200 pounds point load applied in any direction at any point on the rail, or a uniform live load of 50 pounds per lineal foot of rail, whichever is greater.

C. Field Measurement: Make all field measurements as required prior to fabrication and installation.

D. Coordination: Coordinate with other trades to ensure proper sequencing and fitting of construction.

E. Shop Assembly: Pre-assemble items in shop to greatest extent possible to minimize field splicing and assembly. Disassemble units only as necessary for shipping and handling limitations. Clearly mark units for re-assembly and coordination of installation.

1.4 DELIVERY, STORAGE AND HANDLING

A. Store steel materials, either plain or fabricated, above ground on platforms, pallets, skids, or other supports. Keep material free from dirt, grease, and other foreign matter and protect from corrosion.

2. PRODUCTS

2.1 MANUFACTURERS

A. Provide stairs manufactured by American Stair Co., The Sharon Companies Ltd., or equal.

2.2 MATERIALS

A. Steel Sections: ASTM A36, hot-dip galvanized for exterior use.

B. Steel Pipe: ASTM A53, Type S, Grade A, Schedule 40 typical, Schedule 80 for railing posts: hot-dip galvanize after fabrication for exterior use; provide 1-1/4-inch UPS (1.66-inch O.D.) for railing, unless otherwise noted.

C. Steel Tubing: ASTM A500, Grade B cold-formed tubing, or ASTM A501 hot-formed tubing, 1-1/2-inch outside diameter.

D. Steel Checker Plate: ASTM A786-89 “Rolled Steel Floor Plates”, minimum ¼-inch (6mm) thick, with raised figures on top surface. Hot-dip galvanize after fabrication.

E. Bolts, Nuts and Washers: ASTM A307. Provide zinc-coated fasteners for exterior use or where built into exterior walls.

F. Welding Materials: AWS D1.1, type required for materials being welded.

G. Primer: FS TT-P-31, brown: for shop application and field touch-up.

H. Touch-up Primer for Galvanized Surfaces: Tnemec 66 (Polyamide Epoxy).

I. Nonshrink Grout: Master Builders “Embeco”, Conrad Sovig’s “Metal-Mxs Grout”, Sonneborn’s “Ferrolith G Redi-Mixed Grout”, Upco’s “Upcon”, or equal.

J. Drilled Anchors for Use in Concrete: Hilti “Kwik-Conn”, Ramset “Trubolt”, Redhead “Wedge Anchor”, Molly or equal.

K. Shell Type Drilled Anchors for use in Concrete: Hilti “HDI Concrete Expansion Anchor”, Ramset’s equivalent, or equal.

L. Handrail Brackets: Julis Blum & Co. Inc. No. 385, Blumcraft of Pittsburgh, or equal, cast malleable iron wall bracket.

2.3 COMPONENTS

A. Stair Treads and Risers:

1. Form from minimum 14-gage steel. Fabricate with closed risers and treads [concrete filled] of steel construction.

B. Landing Decks: Form from minimum 12 gage steel, same material and finish as tread and risers [concrete filled]. Reinforce underside with angles or metal Tee’s to attain same design load requirements as treads.

C. Stringers: Form from steel profile and thickness to suit span and stair width.

1. Minimum 3/16-inch plates or gage as required by calculations.

2. 11 gage bent plate channel, 10 or 12 inch web, and 1-1/2-inch typical flanges.

3. 12-inch deep web x 10.6 pound/lin. Ft. x 1-1/2-inch flange channel.

D. Posts and Rails: 1-1/2-inch and 1” sq. tube steel members, with 5/8” sq. tube steel intermediate vertical picket rails with a space between not to exceed 3-7/8-inches.

E. Miscellaneous Accessories: Provide mounting brackets, flanges, bolts, fasteners, etc. for secure anchorage of stairs, handrails and railings.

2.4 FABRICATION -STAIRS

A. Verify dimensions on site prior to shop fabrication: Coordinate all metal work with adjoining work for details of attachment, fitting, etc. Be responsible for all fabrication detailing and correct fitting of steel members to each other and to their supports.

B. Fabricate items with joints tightly fitted and secured. Make exposed joints butt tight, flush, and hairline.

C. Fit and shop assemble in largest practical sections for delivery to site and handling through building openings.

D. Grind exposed welds flush and smooth with adjacent finished surface. Ease exposed edges to small uniform radius.

E. Exposed Mechanical Fastenings: Flush countersunk screws or bolts; unobtrusively located; consistent with design of structure, except where specifically noted otherwise.

F. Supply components required for anchorage of metal fabrications. Fabricate anchorage and related components of same material and finish as metal fabrication, except where specifically noted otherwise.

G. Secure treads to stringers with steel angle brackets welded in place. Reinforce underside of landings with angles or metal Tees’ to attain same design load

requirements as treads. Provide mounting brackets and flanges, for secure anchorage of stairs, handrails and railings.

2.5 FABRICATION -RAILINGS

A. Verify dimensions on site prior to shop fabrication. Fit and shop assemble railings in largest practical sizes, for delivery to site and installation.

B. Form rails and posts from steel shapes as indicated on Drawings, with welded jointing, unless otherwise noted. For pipe rails, fabricate right angle and 45 degree bends with 3-inch radius to center line of pipe without flattening the pipe noticeably.

C. For fittings, elbows, Tee-shapes, wall brackets, and escutcheons provide machined steel. Provide splice connectors of steel welding collars.

D. Provide bend return at all free ends of handrails to 1 inch from face of wall. Provide end cap for all free ends of handrails and raisings. Weld all joints, end caps, returns, and transitions. Grind smooth and make flush.

E. Provide extension for all handrails and railings at edges of stairs to comply with the requirements for the physically handicapped.

F. Provide mounting brackets and flanges, for secure anchorage of handrails and railings. Weld handrail brackets and rails to posts.

G. Fabricate sleeves for railing anchoring to concrete floor. Fabricate sleeves from galvanized steel pipe, minimum 6 inches long, 1/2-inch greater diameter than pipe, and with galvanized steel plate closure at bottom of sleeve in size not less than 1 inch greater than outside diameter of sleeve.

2.6 FINISH

A. Interior Stairs: Shop prime with one coat of high-solids red oxide anti-corrosive primer, meeting requirements of Fed. Spec. TT-P-664, TT-P-636, and SSPC 1364.

B. Stairs Exposed to Weather: Hot-dip galvanize after fabrication, followed by primer.

1. ASTM A153 for galvanizing iron and steel hardware.

2. ASTM A123 for galvanizing rolled, pressed, and forged steel shapes, plates, bars, and strips 1/8-inch thick and heavier.

3. ASTM A386 for galvanizing assembled steel products.

4. Shop Primer:

a. Surface Preparation – Field: SSPC-SP1 and brush off/ blast clean.

b. Prime Coat: 3.0-5.0 mils dry film thickness, Tnemec 66 (polyamide Epoxy).

3. EXECUTION

3.1 EXAMINATION

A. Examine the condition in which the work is to be installed. Do not proceed with the Work until unsatisfactory conditions have been corrected.

3.2 PREPARATION

A. Furnish setting drawings, diagrams, templates, instructions, and directions for installation of anchorages, such as concrete inserts, anchor bolts, and miscellaneous items having integral anchor, which are to be embedded in concrete construction. Coordinate delivery of such items to project site.

B. Coordinate all metalwork with adjoining work. Do all cutting, shearing, drilling, punching, threading, tapping, etc., required for miscellaneous metal or for attachment of adjacent work. Drill or punch holes; do not use cutting torch. Shearing and punching shall leave true lines and surfaces.

C. Clean and strip primed steel items to bare metal where welding is scheduled.

D. Make provision for erection loads with temporary bracing. Keep work in alignment.

3.3 INSTALLATION

A. Provide anchorage devices and fasteners where necessary for securing miscellaneous metal fabrications to in-place construction.

B. Conceal all fastenings where practical. Thickness of metal and details of assembly and supports shall give ample strength and stiffness. Form joints exposed to weather to exclude water.

C. Perform cutting, drilling, and fitting required for installation of miscellaneous metal fabrications. Set work accurately in location, alignment, and elevation, plumb, level, true, and free of rack, measured from established lines and levels.

D. Fit exposed connections accurately together to form tight hairline joints. Weld connections which are not to be left as exposed joints but cannot be shop welded because of shipping size limitations. Grind exposed joints smooth and touch up shop-paint coat. Do not weld, cut or abrade the surfaces of exterior units which have been hot-dip galvanized after fabrication and are intended for bolted or screwed field connections.

E. Field Welding: Comply with AWS D1.1 for procedures of manual shielded metal-arc welding, appearance and quality of welds made, and methods used in correcting welding work.

F. Handrails: Secure steel handrails with bracket specified. Unless otherwise noted, locate brackets 6 inches from ends of handrail, 6’-0” on center maximum, and space brackets equidistant at each handrail.

G. Protect all dissimilar metals from galvanic corrosion by pressure tapes, coating or isolators.

H. Do all grouting of frames, plates, sills, bolts, and similar items with nonshrink grout.

I. Verify alignment of all items with adjacent construction. Coordinate related work.

3.3 CLEAN AND TOUCH-UP

A. Immediately after erection, clean field welds, bolted connections, and abraded areas and paint exposed areas with same material as used for shop painting. Apply by brush or spray to provide a minimum dry-film thickness of 2.0 mils.

END OF SECTION

CABLE STAND BARRIERS

SECTION 055900

1. GENERAL CONDITIONS AND SPECIAL CONDITIONS

The General Conditions and Special Conditions are a part of this Section and the Contract for this work. They apply to this Section as fully as if repeated here.

1.1 DESCRIPTION:

A. Work Included:

1. Furnishing, installation and stressing of barrier strands (cables).

2. Furnishing and installation of anchorages, shims, spacers and sleeves related to such barriers.

B. Related Work Specified Elsewhere:

1. Patching of blockouts for anchorage: See Concrete Finishes.

2. Tubular metal railings: See Structural Steel and Miscellaneous Metal.

1.2 REFERENCES, CODES AND STANDARDS: The following references and standards are hereby made a part of this Section and stressing of strands shall conform to the applicable requirements therein except as otherwise specified herein or shown on the Drawings. Nothing contained herein shall be construed as permitting work that is contrary to code requirements.

A. "Post-Tensioning Manual", published by Post-Tensioning Institute, latest edition.

1.3 QUALIFICATIONS: Strand barriers shall be installed by an organization that has successfully performed previous installations of a major nature similar to the one involved in the Contractor for a minimum of five (5) years.

1.4 SUBMITTALS:

A. Product Data: Submit manufacturer's product data to clearly show the nature of the anchorage system proposed.

B. Samples: Upon request of Architect, submit one full-size sample of each type of anchorage assembly proposed. Submit duplicate samples, each not less than 12" in length, for each type of strand to be used.

1.5 PROTECTION: Barrier strands and anchorage shall be satisfactorily protected from corrosion or other physical damage prior to placement and shall be free from detrimental substances when tensioned. Provide protection for strand and accessories exposed in the finished work to prevent deterioration by rust or corrosion.

2. PRODUCTS

2.1 MATERIALS:

A. System: DYWIDAG Barrier Cable System, Stress Express, or approved equal.

B. Strand: High-tensile, cold-drawn, 7-wire strand conforming to ASTM A 416-86, Grade 270, 1/2” diameter, hot-dip galvanized as per ASTM A 123-84.

1. Strand shall be straightened, if necessary, to ensure proper placing through sleeves and anchorage.

2. Strands having broken wires, nicks, sharp surfaces or projections or fabrication or handling defects are not permitted.

3. Each strand shall be a single length for each run; couplers are not permitted.

C. Anchorages:

1. Tensioned strands shall be secured at the ends by means of approved anchoring devices which shall be of such nature that strands will not kink or otherwise be damaged.

2. Anchorage devices shall hold the strands without any slip which would result in stress less than that specified.

3. Anchorages shall consist of welded steel or cast steel bearing assemblies.

4. Ferrous metal anchorage components shall not be hot-dip galvanized after fabrication as per ASTM A 123-84, except where the nature of the holding device prohibits galvanizing.

D. Sleeves: Polyvinylchloride (PVC) pipe, Schedule 40, 3/4" IPS size unless otherwise noted or required.

E. Zinc Rich Coating: ZRC Chemical Products Co., "Z.R.C. Cold Galvanizing Compound", or approved equal.

3. EXECUTION

3.1 PLACEMENT: Sleeves and inserts in concrete work shall be accurately installed and secured in place prior to placing concrete.

3.2 FIELD CONTROL: All stressing work shall be under the immediate control of a person experienced in this type of work. He shall exercise close check and rigid control of all operations, as necessary for fully compliance with the requirements.

3.3 STRESSING:

A. Stressing of strands shall be done by methods and related equipment that are in conformance with generally accepted systems of prestressing. Approved variations of such generally accepted methods and equipment will be permitted provided equal results can be obtained.

B. Strands shall be stressed by means of hydraulic jacks, equipped with accurate reading calibrated hydraulic pressure gauges to permit the stress in the prestressing steel to be computed at any time.

C. Strands shall be stressed to produce an anchoring force of 2000 lbs. minimum and 3000 lbs. maximum.

D. Strands shall be anchored at an initial anchor force or stress that will result in the ultimate retention of the minimum stress specified above.

E. Following stressing and completion of anchorage, excess strand ("tails") shall be burned off as close to anchorage as possible.

F. Coat cut surfaces of strands, all uncoated ferrous metal surfaces and all damaged and abraded galvanized surfaces with heavy coat of zinc rich coating. Take precautions to avoid coating stains on adjacent surfaces.

3.4 CLEANING: Clean exposed surfaces of strands and anchorages free of oil, dirt and soil. Remove cut strands and waste materials from job site. Repair damage to plastic coatings as per manufacturer's recommendations and subject to approval of Architect.

END OF SECTION

FINISH CARPENTRY

SECTION 062000

1. GENERAL CONDITIONS AND SPECIAL CONDITIONS

The General Conditions and Special Conditions are a part of this Section and the Contract for this work. They apply to this Section as fully as if repeated here.

1.1 Scope:

A. The principal items of work in the Section are:

1. Fastenings, as required, including nails, bolts, screws, et al.

2. Miscellaneous backboards, blocking, plywood and wood nailers.

1.2 Related Work in Other Sections:

A. Painting

1.3 Product Handling:

Stock all lumber and plywood on the site and keep off the ground and provide spreaders and protective coverings, as required to permit good air circulation and weather protection. Wood trim for light coves and exterior cedar-board shall be delivered to project in dry weather and shall not be stored or installed in buildings until concrete, cement finish, and other items which raise humidity in buildings are thoroughly dry.

1.4 Submittal:

A. General: Refer to General Conditions of the Contract.

B. Shop Drawings: Shop Drawings for all fabricated items shall show all dimensions and all detail of construction, installation, and relation to adjoining and related work where the same requires cutting or close fitting, and shall show all reinforcements, anchorage, and attachments as may be required for complete installation.

1.5 Coordination of Work:

A. Coordinate: With work under other Sections.

B. Verify: That insulation, electrical, plumbing and other systems work and inspections have been completed before work is enclosed. Check location of blocking furnished and set under this section and backing plates set and furnished under Section 09206 with requirements for support of accessories, and other items requiring such blocking and backing.

2. PRODUCTS:

2.1 Materials:

A. Lumber: Shall be No. 1 Douglas Fir, S4S, grade stamped by WWPA.

B. Plywood: Douglas Fir plywood, U.S. Product Standard PS1-66, grade stamped by DFPA, or other approved testing laboratory, including:

1. Blocking, Fillers, etc.: 1/4" to 3/4" C-C grade exterior glue throughout not less than 3 plies for 3/8" and thinner; 5 plies elsewhere, Fire Retardant treated.

C. Fasteners: Non-corrosive, galvanized or cadmium-plated where noted. Make fasteners of adequate size, spacing and number to resist design loads under intended use, and type appropriate for materials or conditions for which used. Comply with the following Federal Specifications.

1. Nails: FF-N-105; common wire galvanized for exterior and concealed work; finish or casing for interior exposed work.

2. Screws: Match type of metal to be fastened. Use case-hardened steel for self-drilling, self-tapping screws.

3. Bolts, nuts: FF-B-575; Case hardened steel for self-tapping bolts.

4. Lag Bolts and Screws: Federal Specifications FF-B-561.

5. Expansion Shields: FF-S-325; metal, with no plastic or fiber parts.

6. Toggle Bolts: Federal Specification FF-B-588; galvanized.

7. Powder-actuated: Tempered steel pins with special corrosion-resistant finish. Provide guide washers to accurately control penetration. Accomplish fastening by low-velocity piston-driven powder-actuated tool. Pins and tool: Hilti Fastening Systems; Impex Tool Corporation; or equal.

2.2 Treatments:

A. Preservative Treatment: For furring over concrete, roofing nailers and embedded nailers, F.S. TT-W-005E and TT-W-535b Koppers Co., J.H. Baxter Co. or approved equal. Store, protect, re-treat field cuts and holes per manufacturers instructions.

B. Fire-retardant Treatment: Same as Koppers Co., Inc.'s "Non-Com", J.H. Baxter and Co.'s "Baxco-Pyresote" or approved equal.

1. Lumber, each piece labeled and in accord with AWPA C-20, UL723, NFPA 225, ASTM E84.

2. Plywood, each piece labeled and in accord with AWPA C-27, UL 723, NFPA 255, ASTM E84.

3. Materials and methods proposed for use shall be approved by Architect and State Fire Marshal.

4. Touch up material as recommended by manufacturer; however, avoid unnecessary cutting, trimming and boring on the job.

3. EXECUTION

3.1 Installation:

A. Install with skilled professionals only, including carpenters and cabinet workers. Installation shall be neat and secure.

B. Injury or damages to any surface or adjacent surface for any reason shall be replaced or repaired entirely to the satisfaction of the Architect.

C. All nails shall be blind nailed wherever possible. Set all nailheads. Nail as necessary for complete and secure installation. All other fasteners shall be concealed.

D. Apply mastic at concealed location, in accordance with manufacturer's recommendations, wherever required for watertight installation. Meet requirements as to materials as specified in Section 07915 – Sealants and Caulking.

END OF SECTION

WATERPROOFING

SECTION 071000

1. GENERAL CONDITIONS AND SPECIAL CONDITIONS

The General Conditions and Special Conditions are a part of this Section and the Contract for this work. They apply to this Section as fully as if repeated here.

1.1 SCOPE

Work in this section consists of:

A. A penetrating waterproofing slurry on the below grade elevator pit walls (interior face only).

B. A waterproofing membrane the below grade elevator pit walls and for all below grade retaining walls. Including prefabricated drainage panels connected to a base drain that is connected to hard pipes. All cold joints shall receive bentonite water stop that is secured in place. All block-outs at tiebacks (if used) shall receive additional layer of membrane materials and water stop.

1.2 QUALITY ASSURANCE

A. Work performed only by workmen trained and experienced in this specialty.

B. Manufacturer's representative shall be locally available for jobsite inspections and assistance, as necessary to certify the product and systems installation and provide written guarantee, and to inspect substrate prior to installation.

C. Upon completion, and as a condition precedent to final acceptance, the Manufacturer shall issue a certificate to the Architect stating that the work of this Section has been performed in strict compliance with all Contract requirements, and the manufacturer's specifications and recommendations for a proper installation.

1.3 DELIVERY AND STORAGE

A. Deliver all materials in the original manufacturer's sealed containers.

B. Store all materials out of direct exposure to the sun and so as to preclude damage from all other sources.

1.4 SPECIAL GUARANTEE

Shall warrant waterproofing work against defect of materials or defective workmanship against entry of water into or through the interior spaces of the structure or its parts due to failure or defects; and, checking, cracking, crazing or other objectionable changes. Duration shall be for one year from date of acceptance of project. Provide field inspection as required to certify proper product installation, and that the work of this Section has been performed in strict compliance with all Contract Requirements, as well as manufacturers' specifications, recommendations, and instructions.

2. PRODUCTS

2.1 MATERIALS

A. Penetrating Waterproofing Slurry: For interior elevator pit walls below grade; VANDEX SUPER Penetrating Waterproofing Slurry as manufactured by VANDEX.

Alternate is XYPEX C-500 admixture, or approved equal.

B. Membrane Waterproofing: For elevator pit and walls below grade; Bituthene 3000 waterproofing membrane and vapor seal, self adhering, primer - P3000, as manufactured by W.R. Grace, or mop applied rubberized asphalt, "6125" by Hydrotech, or approved equal.

C. Protection Board: 1/8" minimum thickness, APOC board.

D. Prefabricated Composite Drainage System: For all below grade retaining walls; [excluding elevator pits] provide "Miradrain - 6000" drainage composite system with filter fabric, as Manufactured by Mirafi, A Division of Nicolon Corporation. 3500 Parkway Lane, Suite 500, Norcross, Georgia 30092, (800) 234-0484, (404) 447-6272,

E. Perimeter wall drainage: [as applicable] Provide 4” perforated PVC pipe (Schedule 40) set at level grade above footings. Perforations to be placed down and 3/8” in diameter. Set drain in two cubic feet per linear foot of Class 2 permeable drain rock wrapped in filter fabric See plumbing for drain lines.

3. EXECUTION

3.1 PREPARATION OF SURFACES

A. The wall surfaces shall be smooth, clean, dry, and firm. All cracks, voids, holes, and depressions shall be carefully filled with cement grout to provide a flush and solid surface with all projections removed.

B. Install against primed masonry or concrete.

3.2 MEMBRANE WATERPROOFING APPLICATION

A. Apply/install materials per manufacturers instructions, specifications and/or recommendations. caulk all joints prior to application of reinforced strips.

B. Install protection board over membrane.

C. Scaffolding: Any scaffolding required shall be furnished by the subcontractor unless prior arrangements are made with the General Contractor.

D. Deposit backfill in such a manner to prevent damage to the finished products.

END OF SECTION

ELASTOMERIC COATINGS

SECTION 071816

1. GENERAL CONDITIONS AND SPECIAL CONDITIONS

The General Conditions, Supplementary Conditions and Special Conditions are a part of this Section and the Contract for this work. They apply to this Section as if fully repeated here.

1.1. SCOPE

A. Work Included: Furnish materials and perform labor required to execute the elastomeric coating work as indicated on the drawings, as specified herein and as necessary to complete the Contract, including:

1. Over future restaurant spaces, service area, storage room and telephone room on Level P-2 and any additional areas as shown on the drawings including an overlap of 12” beyond the walls below and when next to spandrel or wall extend elastomeric 4" up the face of the spandrel or wall.

2. Over elevator machine room. electrical room, utility room and restroom on the lower roofs at the P-1 level and additional areas as shown on the drawings including 4" up the face of the wall.

3. Over delay closure pour strips at the upper level including an overlap of 12” beyond the delay strip and when next to spandrel or wall extend elastomeric 4" up the face of the spandrel or wall.

1.2. GENERAL REQUIREMENTS

A. Code Approval: Approved in writing by the governing building code enforcement authorities having jurisdiction over this work as acceptable for use in similar locations and substrates require by this Project.

B. Sandblasting: Of type as approved by the governing agencies having jurisdiction over this work.

C. Underwriters' Laboratories, Inc. Listing: Class "B" or BTR when applied over concrete.

D. Mil Thickness specified in this section are "dry" film.

E. Samples: Submit (3) samples 4" X 6" of coating system used on suitable backing in specified mil thickness, quality of work, texture and color, for approval before starting work. Finished work shall match approved samples. Colors as selected by Architect and approved by Owner.

1.3. MANUFACTURER'S DIRECTIONS AND COMPLIANCE

A. Applicator shall notify manufacturer of the material to be used before commencing work, allowing at least 72 hours to arrange for inspection service by manufacturer's representative. All unsatisfactory conditions disclosed by this inspection shall be satisfactorily repaired and reinspected before work is started. Prior to start of installation the manufacturer's representative shall provide such inspection at the job site which may be necessary to insure the proper procedures are being followed. All

requirements of the manufacturer's representative relative to proper preparatory work and installation procedures shall be considered as mandatory requirements.

B. Upon completion, and as a condition precedent to final acceptance, the Manufacturer shall issue a certificate to the Architect stating that the work of this Section has been performed in compliance with all Contract requirements.

1.4. DELIVERY AND STORAGE

A. Deliver all materials in the original manufacturer's sealed containers.

B. Store all materials out of direct exposure to the sun and so as to preclude damage from all other sources.

1.5. ENVIRONMENTAL REQUIREMENTS

A. Substrate temperature: Not lower than 50 degrees F. nor greater than 110 degrees F. during application of adhesive/primer or subsequent coatings.

B. Weather: No precipitation during application of adhesive/ primer or subsequent coatings.

1.6. PROTECTION

A. Follow instructions contained in manufacturer's printed "Safety Instructions".

B. Coated Surfaces: After completion of application, do not allow traffic on coated surfaces for the duration as recommended by manufacturer of coating used.

C. Adequately protect adjacent surfaces not scheduled to receive coating, from overspray and other damage during coating application, by masking and/or other means as may be necessary to accomplish this result.

1.7. COORDINATION

A. Consult and cooperate with the other trades whose work affects or is affected by work of this Section in order that all phases of the work are properly coordinated to avoid delays, omissions or damage to any part of the work.

B. The General Contractor shall notify the coating applicator and/or the manufacturer's representative in sufficient time to personally demonstrate to the workmen what type of concrete finish will be acceptable to the manufacturer for the areas which are to receive the coating.

1.8. APPLICATOR

A. Licensed and approved in writing by the manufacturer of the Elastomeric Coating used. Material shall be applied by factory trained mechanics in strict accordance with manufacturer's instructions, using equipment and procedures recommended by the manufacturer.

2. PRODUCTS

2.1. COATING SYSTEMS AND MANUFACTURERS

A. ELEVATED SLABS (and over room roofs at the P-1 level)

Vulkem 350 Traffic deck Coating System as manufactured by Mameco International, Inc, (800) 321-6412.

Elasto-Deck 5000 P.D.S. – 70 mil Parking Deck System, Pacific Polymers, Inc. (800) 888-8340.

B. Approved equals upon submittal to Architect with samples shall be considered in lieu of those specified.

3. EXECUTION

3.1. SUBSTRATE CONDITIONS

A. Verify that work performed under other Sections meets the following requirements:

1. That concrete surfaces were finished in accordance with the requirements of Article 1(G) herein before specified.

2. That concrete was cured by a water curing method only. Liquid curing agents or bond breaking solution not permitted unless approved by the elastomeric coating manufacturer.

3. That concrete has completed a curing period and that is completely dry as approved by the deck coating manufacturer.

4. That concrete is free of contaminants.

5. Other requirements which may be a prerequisite of the manufacturer of the coating used.

6. Where coating edges terminate transitions shall be clean, straight and level.

B. Start of the work in any area to which deck coating is to be applied implies acceptance of the surfaces, and the assumption of all obligations under the required guarantee.

3.2. PREPARATION OF SURFACES

A. Remove oil and grease spots with a commercial grade alkaline cleaner. Thoroughly rinse and dry.

B. Remove all laitance and contaminators. Surfaces treated with muriatic acid shall be thoroughly flushed with high pressure water. Sandblast surfaces when required. Finish surface shall be structurally sound, clean and dry.

C. Thoroughly sweep or vacuum all surfaces prior to coating.

D. Shrinkage cracks in concrete where elastomeric membranes are to be applied which are over 1/16" in width shall be sawcut or routed clean by the subcontractor and filled flush with flowing type liquid coating material. The crack shall then be waxed for a distance of 1/4" on each side. Other methods for crack treatment may be used which is standard with the manufacturer of the coating on order to effect the required guarantee.

3.3. COATING APPLICATION

A. Cracks shall be cut open, cleaned, primed and filled with sealant in accordance with manufacturer's instructions.

B. Clean surfaces to be coated, prime in accordance with manufacturer's recommendations, then apply liquid coating in minimum three (3) coats to total thickness of not less than 60 mils, all in strict accordance with manufacturer's instructions. Where coating adjoins walls, return coating 6" up on the wall to form base.

C. At all areas, final coat shall have a medium textured finish and shall be impregnated with an abrasive aggregate.

3.4. TESTS

A. The material used shall comply with the following procedures. Testing shall be done on the base membrane as applied, by a recognized testing laboratory and certified reports shall be submitted.

1. Fire Test - shall be Class "B" or better and shall be Building Code approved tested in accordance with ASTM E-108.

2. Percent elongation - elongation tested in accordance with ASTM D-412 shall be at least 750-1000%.

3. Tensile strength - tensile strength tested in accordance with ASTM D-412 shall be at least 900-1000 P.S.I.

4. Abrasion test - tested in a Tabor Standard Tester for 1000 cycles under a 1000 gram load using CS-17 wheels. A 60 mil specimen shall lose no more than .004 inches in depth in wear. Test performed on a smooth sample without aggregates.

3.5. GUARANTEE

A. The material and workmanship involved in this application shall be guaranteed, under a single document to the Owner. The guarantee shall insure waterproofing performance of the system at no cost to the Owner, for a period of ten (10) years, from the date of building acceptance by the Owner. Provisions of the guarantee shall include responsibility for cracking in the substrate up to 1/8" in width.

END OF SECTION

EXTERIOR INSULATION AND FINISH SYSTEM

SECTION 072400

1.00 GENERAL CONDITIONS AND SPECIAL CONDITIONS

The General Conditions and Special Conditions are a part of this Section and the contract for this work. They apply to this section as fully as if repeated here.

1.01 SCOPE

A. Requirements of the General Conditions Supplementary General Conditions and Division I apply to work of this Section.

B. Furnish all labor, materials, services, equipment and appliances required to perform all work to complete the Contract, including, but not limited to, these major items:

1. All adhesives, board insulation, reinforced fabrics, base and finish coats.
2. All sealants, caulking, joint fillers and gaskets in conjunction with the above components for a weather tight performance in the fabrication and erection of the system.
3. All anchorage of above components including necessary steel framing reinforcement.
4. Provide all necessary and required design, engineering, calculations and labor for the complete and total design of the EIFS system, above and beyond that indicated on the drawings.
5. Coordination for the interface of the EIFS with adjacent trades.
6. Installation of EIFS components on plaster based substrates.
7. All vents, weeps, weep tubes, closures, gutters, flashings, trim, etc., as shown or as required in conjunction with system or to join system to adjacent construction.

1.02 RELATED WORK IN OTHER SECTIONS

A. Section 079200: Sealants and Caulking
B. Section 099100: Painting

1.03 REFERENCE STANDARDS

A. Federal Specifications (Fed. Spec.):
HH-1-524 B Insulation Board, Thermal (Polystyrene).

B. Federal Standard (Fed. Std.):
141A/6201 Moisture Resistance
141A/6191 Abrasion Resistance (Falling Sand)
141A/6061 Salt Spray (Fog) Test
141A/6151 Accelerated Weathering

C. American Society of Testing and Materials (ASTM):
ASTM B117 Salt Spray Fog Test
ASTM C79 Specification for Gypsum Sheathing Board.
ASTM C355 Water Vapor Transmission
ASTM C578 Specification for Preformed, Block Type Cellular Polystyrene Thermal Insulation Board.
ASTM D1682 Breaking Load and Elongation of Textile Fabrics.
ASTM E72 Strength Tests of Panels for Building Construction.
ASTM E84 Test for Surface Burning Characteristics of Building Materials.

D. EIDS Industry Members Association, EIMA

E. Military Standard (MIL-STD):
810 B Environmental Test Methods, Mildew Resistance

F. Military Specifications (MIL-SSPEC):
MIL-Y-1140G Yarn, Cord Sleeving, Cloth and Tape-Glass

1.04 SUBMITTALS

A. Provisions: Comply with Division 1 Section: Submittal Procedures.

B. Current ICBO Report, stating that the system conforms to the International Conference of Building Officials criteria for materials and system composition.

C. Product data for every component of the exterior insulation and finish system.

D. Submit 2' x 2' sample for each specified finish color and texture, using the same tools and techniques as for actual project. Samples shall include reveals and caulked joints.

E. Submit complete shop drawings, showing fabrication and installation of the system including plans, elevations, sections, details of components, showing wall layout, all connections, all expansion and control joints and details where adjoining construction abuts or penetrates the system.

F. Submit engineering calculations verifying the structural performance of the EIFS. Structural calculations shall be sealed by a licensed professional engineer in the state of California, prepared in compliance with referenced documents and there specifications. Test reports are not an acceptable substitute for calculations. Coordinate with Division 5 Section: Light Steel Framing. Calculations shall include the following:

1. Analysis for all applicable loads on framing members and analysis of sheathing attachments to stud framing.
2. Analysis for all applicable loads on anchors, including anchors embedded in concrete.
3. Section property computations for framing members

G. Submit a copy of certificate of training by the EIFS manufacturer for applicator or contractor, and qualification data to demonstrate capabilities and experience. Include list of completed projects, addresses, names of architects and owners, plus other information requested prior to commencing work on the project.

H. Maintenance Kit: Supply maintenance kit to job and store where directed. Maintenance kit shall include enough materials to repair 20 square feet for each color. Containers of liquids shall be unopened.

1.05 QUALITY ASSURANCE

A. Applicator: Application of the system shall be by an applicator trained and certified by the manufacturer of the system, conforming to the quality control program and shall have at least five (5) years of successful experience in similar scope.

B. Manufacturer shall have marketed exterior insulation and finish systems in the United States for a minimum of ten (10) years. Demonstrate at least 50 completed projects utilizing this type of exterior insulation and finish system of similar building type, size and substrate type as utilized by this project.

C. Inspection: Manufacturer's representative shall inspect work of Project on regular basis and provide certification EIFS has been installed in accordance with manufacturer's recommendations.

D. Obtain materials for the system from either a single manufacturer or manufacturers approved by the system manufacturer as compatible with other system components.

E. Quality of Surfaces and Finishes:

1. Review the finished surface of the polymer/fiber modified plaster base to verify conformance with anchorage of mesh, base coat and foam shapes as indicated on the drawings.
2. Final finish is to be uniform in appearance, colors and texture, free from visible mesh overlap, mesh texture telegraphing through finisher or blotchy colors due to variations in hydration/drying.

1.06 PLANS AND SPECIFICATIONS

A. These specifications are intended to provide performance criteria for the design, fabrication and installation of the exterior insulation and finish system. Contractor is responsible for the engineering and design of all components and materials as well as the fabrication, installation and performance of the EIFS systems.

B. Architectural drawings are diagrammatic. The architectural details shown are intended as a guide for the aesthetic and interfacing requirements of the various components of the exterior wall to adjoining work. The requirements shown by the details are intended to establish basic dimensions of the module and the sight lines, jointing and profiles of members. The Contractor is responsible for the design and engineering of the system within these aesthetic parameters. The drawings are not to be construed as engineering design or adequate to meet the engineering design or all manufacturers' requirements.

C. Contractor shall recognize that the architectural design details do not cover all conditions or modifications, which may be required. It is however intended that conditions not detailed shall be developed through the Contractors shop drawings to the same level of aesthetics and in compliance with performance criteria as indicated for detailed areas and as stipulated in these specifications. The Contractor, by accepting a contract for this work, acknowledges this and agrees that the Architect shall have the final say as to all matters whether detailed or not on the architectural design drawings.

1.07 DESIGN REQUIREMENTS

A. Contractor shall design system to withstand wind loads required by California Code of Regulations, Title 24, Part 2, and Uniform Building Code, but no less than 30 psf positive and negative pressure.

1. Maximum allowable deflection of spans is 1/240.
2. Design system to provide movement of components without causing buckling, failure of joint seals, undue stress on fasteners or other detrimental effects, when subject to seasonal temperature ranges.
3. Design system to accommodate tolerances of structure.
4. Wind Exposure: Exposure "C".

B. Expansion joints, control joints and reveals shown on the shop drawings are indicated to reflect the joint that are to be visible/expressed upon completion of work. Contractor shall include all additional expansion joints required building expansion joints, at panel joints, where substrates change and where structural movement (flexural movement) occurs at floor line elevations, whether or not indicated on the contract drawings. All joints shall include the additional stop and start of the foam and additional back raping required. Areas that require furring and/or framing shall be brought to the attention of the Architect. Joint locations shall be as approved by the Architect. Caulked joints shall be struck flush for maximum concealment.

C. System design shall be in conformance with contract drawings and specifications, manufacturer's specifications and industry standards. Provide for a composite wall system of vapor barrier (building paper), sheathing (Dens-Glas or approved equal sheetrock, as specified) and EIF system, with all joints required for a manufacturers warranty and trouble free system performance.

D. Substrate movement and expansion and contraction of the system and of adjacent materials shall be taken into account in the design of expansion joints, with proper consideration given to sealant properties, installation conditions, temperature range, coefficients of expansion of materials, joint width to depth ratios and other material factors.

E. The insulation board shall be completely encapsulated by the ground coat and shall be separated from the interior of the building by a thermal barrier.

F. The trained applicator shall verify that the proposed substrate is acceptable to the applicable regulatory agencies and manufacturer standards prior to application of the system. Substrate systems shall be engineered with regard to structural performance with deflection not to exceed L/240.

G. When caulking and sealants are used in conjunction with EIF systems, work shall not begin until finish coat has been applied and cured to manufacturer's recommendations. Selection of sealant color shall be as selected by the Architect from manufacturer's standard or custom color palette, without additional coat to the Owner.

1.08 DEFINITIONS

A. Expansion joints shall be defined as meaning and be required within the system at the following locations

1. When the substrate has an existing control joint, expansion joint or live building crack.
2. Where the system is applied to dissimilar substrates.
3. At each floor level line where structural (flexural) movement is anticipated, that would compromise the integrity of the system by introducing undesired movement through the system thereby causing cracking.

1.09 PRODUCT DELIVERY, STORAGE AND HANDLING

A. Deliver products in original unopened packaging with legible manufacturer's identification.

B. Store products in cool dry place out of direct sunlight, protected from the elements and from damage. Store at a temperature of not less than 40 degrees F.

C. Protection:

1. Protect surrounding areas and surfaces to preclude damage during application of the system.
2. Protect finished work when stopping for the day or when completing an area in order that water will not penetrate behind the System.

1.10 JOB CONDITIONS

A. Environmental Requirements:

1. Application of the System shall be in ambient temperatures above 40 degrees F. and on unfrozen surfaces. For installation in temperatures less than 40 degrees F. supplementary heat shall be provided.

2. A minimum ambient temperature of 40 degrees F. shall be maintained for at least 24 hours after the system installation.

B. Coordination:

1. The work of this Section requires close coordination between related sections.
2. All joints in the sheathing are to be mudded and in the finished system to be caulked, done immediately after the installation of the System
3. Coordinate with Architect for schedule of color for different finisher colors selected to be used for the different surfaces throughout the work.
4. Coordinate as required and be total responsible for the full and satisfactory compatibility and performance between all sealants used under this section and those sealants used by other trades that may be in contact with or adjacent to sealants in this work.

1.11 WARRANTY

A. Provide the Owner with the system manufacturers standard five (5) year warranty against defective materials. Warranty to cover base coat delamination, cracking of base and/or finish coat and excessive fading or coating. Furnish all materials required for a complete repair.

B. Contractor shall provide the Owner with a one (1) year labor warranty agreeing to replace any/all defects caused by faulty installation. Agree to replace failures due to improper base coat coverage of back wrapping or coating application.

1.12 DELIVERY, STORAGE AND HANDLING

A. Deliver, store and handle all EIFS wall system assemblies so as to prevent damages at all times per manufacturers recommendations.

B. All materials delivered to the site shall be stored in spaces provided on each floor of the building. These spaces shall be located where the stored materials will not be exposed to wetting or damage, and shall permit easy access to the handling of the materials. Materials shall be stored neatly, properly stacked and protected.

C. Deliver other materials, except bulk materials, to protect site in manufacturers unopened containers with name, brand, type, grade and color fully indicated. Store bulk materials as required to avoid any deleterious effects of weather, soiling or contamination.

PART 2 - PRODUCTS

2.01 MANUFACTURE

A. Acceptable Manufacturers:

1. Parex Incorporated, Western Building Products
2. Omega Products International, Inc.
3. Senergy Inc.
4. Dryvit Systems, Inc.
5. STO Industries, Inc.

2.02 MATERIAL

A. Adhesive: The adhesive shall be an acrylic-polymer based product meeting bond strengths as per ASTM-D847.

1. Metal Substrates: Use 100% acrylic polymer-based premixed adhesive.
2. Concrete and Masonry Substrates: Use manufacturer's standard job site mixture of Portland cement and acrylic polymer based adhesive.
3. Sheathing: Use acrylic polymer based or polymer modified adhesive, premixed or mixed with water or Portland cement per manufacturer's instructions.

B. Portland Cement: Portland cement shall conform to ASTM C 150, Type I or II, fresh and free of lumps.

C. Water: Water shall be clear, clean and potable, without any foreign matter in solution which might affect the color or setting qualities of the cement, adhesive, or finish coat.

D. Insulation Board: Expanded polystyrene; Federal Specifications HH-1-524 C, Type I, ASTM C578. Flame spread shall not exceed 25, smoke developed less than 450. Minimum thickness at any point shall be ¾".

E. Acrylic Veneer Base:

1. The acrylic veneer base shall be a hard, breathing type bonding layer.
2. This bonding layer shall be of an especially prepared mastic type material applied in a thickness sufficient to completely embed the reinforced fabric.
3. The strength of the shear bond on the surface of the insulation board shall be sufficient to develop the full tensile strength of the reinforcing fabric.

F. Waterproofing Base Coat: Provide waterproof base coat at sloping and horizontal surfaces. Mix one part Type I Portland cement to one part copolymer based waterproofing material as standard with the manufacturer.

G. Standard Reinforcing Mesh: (4.0 oz/sq.yd.). Mesh shall be alkali resistant treated, balanced, open weave, glass fiber type, tensile strength of not less than 145 lbs.

H. Acrylic Veneer Finish:

1. The 100% acrylic factory mixed veneer finish shall be integral color and texture, of a hardening, air cured mastic type material.
2. It shall form a breathing type coating fully bonded and compatible with the acrylic veneer base to which it is applied.
3. Color and textures shall comply with the approved samples. Colors as selected from selected manufacturers color chart.
4. The Architect will prepare a color schedule for guidance in application of finish veneer. The Architect may select or allocate a maximum of three different colors for different surfaces throughout the work.

I. Systems using mechanical fasteners will not be accepted.

J. Backer Rod and Sealant:

1. Backer Rod – Closed cell, compressible, extruded neoprene, polyethylene or polypropylene foam type with flame spread less than 25. Open cell backer rod is not allowed.
2. Sealant – Conform to Section 07900 and manufacturer recommendations. Use one product throughout the project.

K. Primer/Sealer: Color prime or prime as applicable.

L. Aluminum Reveal Joints: Provide one piece aluminum plaster channel screed reveals of size (width and depth) as indicated or as required for the thickness of the adjacent EIFS. Use prefabricated +, T, & L intersection pieces with heliarc welded joints, with smooth true connections ground smooth. Connect to adjacent run with manufacturer's standard connection clips for alignment and base for sealant. Provide Fry Reglet, Pittcom, or approved equal.

M. Fasteners: Any exposed fasteners or fasteners in wet areas of the wall shall be Series 300 stainless steel. Finish exposed fasteners to match adjacent aluminum. Exposed fasteners may only be used if approved by the Architect. The work shall be designed to conceal all fasteners.

Unexposed fasteners in dry areas shall be cadmium and colored chromate plated and shall meet Fed Spec. QQ-P-416E, Type II, Class I. All non structural fasteners used in a structural application must meet the minimum requirements of SAE J429, Grade 5.

N. Flashing: If required within the system or to join with adjacent construction shall be aluminum or stainless steel.

2.03 SYSTEM PROPERITES

The system specified shall have the following minimum characteristics and properties.

A. Mechanical Properties:

1. Tensile Bond Strength of Adhesive – ASTM D 1682 Insulation Board to:

Exterior gypsum sheathing	1200 psf
Concrete	1900 psf

2. Impact Resistance – ASTM E72
(Sections 13.1 – 13.4)

Drop Height	Indentation	Observations
6 Feet	8.5 mm	non-cracking

3. Freeze-Thaw Resistance - +20 degrees C. to -10 degrees C. Soaked at 20 degrees C. -4 days, then -10 degrees C. for 2 hours and +20 degrees C. for 2 hours.
Results: 60 Cycles with no checking, cracking, or splitting.
4. Water Vapor Transmission – ASTM C355.
Insulation Board 1.2 to 2.0 perm-inch. Plaster Laminate 9.75 perm.

B. Weathering Properties:

1. Accelerated Weathering – Fed. Std. 141A/6151 2000 Hours
2. Salt Spray Resistance – Fed. Std. 141A/6061 300 Hours – 5% Salt Concentration.
3. Falling Sand Abrasion – Fed. Std. 141A/6191 500 liters – no deleterious effects.
4. Moisture Resistance – Fed. Std. 141A/6201 14 days – no deleterious effects.
5. Mildew Resistance – Mil. Stds. 810 B. – No growth of mildew.

2.04 MIXING

A. Adhesive and Acrylic Veneer Base:

1. Use clean plastic container, free of all foreign substance, for mixing and preparing material. Do not use container which has been used for or cleaned with a petroleum product.
2. Use a mixer similar to Goldblatt Jiffler Mixer No. 15 311 H7, powered by ½ inch drill 400-500 RPM.
3. Stir adhesive or acrylic veneer base before adding Portland cement to assure homogeneous material.
4. Mix Portland cement with adhesive or acrylic veneer base in a ratio of one part Portland cement to one part adhesive or acrylic veneer base. Measure quantities of adhesive or acrylic veneer base and Portland cement separately before mix. Add Portland cement to adhesive of acrylic veneer base in small increments while thoroughly mixing each increment.
5. Water may be added to adjust workability.
6. Pot life for mixed adhesive or acrylic veneer base shall be the same as ordinary mortar or acrylic materials. Keep container closed when not in use.
7. No additives such as rapid binders, anti-freeze, accelerators, etc., shall be added to any material under any circumstances.

B. Acrylic Veneer Finish: Thoroughly mix the factory prepared integrally colored acrylic veneer finish material with the high speed mixer, until a uniform workable consistency is attained. A small amount of clean potable water may be added to adjust workability.

2.05 FABRICATION

A. Exposed fasteners on finished surfaces are not permitted.

B. Protection against galvanic action shall be provided wherever dissimilar metals are in contact, except in the case of aluminum in contact with galvanized steel, zinc or relatively small area of stainless steel or nickel silver (white bronze). This protection shall be provided by painting the dissimilar metal surfaces with a heavy coat of zinc chromate primer or by application of an appropriate sealant or tape or other approved galvanic isolator.

C. Aluminum which is in contact with cured concrete, mortar of plaster shall have the contact surfaces protected. Use a heavy coat of bituminous paint applied to the aluminum or other permanent separator on concealed contact surfaces of the aluminum before assembly or installation.

D. Items of carbon steel, unless galvanized of scheduled for another finish, shall be thoroughly cleaned of all loosed scale, filings, dirt and other foreign matter and shall be painted with zinc chromate primer, complying with FS-TT-P-645 and SSPC-SP6. Surface preparation shall meet SSPC-SP6.

PART 3 - INSPECTION

3.01 INSPECTION

A. Contractor shall examination of surfaces to receive the system for the following:

1. Substrates contrary to recommendation of the system manufacturer.
2. Defects of coatings on the substrate that will adversely affect the execution and quality of work. The substrate shall be clean, dry, sound, free of hot spots, release agents (silicones, oils, etc.), efflorescence and other residue.
3. Deviations or irregularities beyond allowable tolerances for installation of substrates material. The substrate shall have no planar irregularities greater than ¼ inch. If a leveling of irregularities in cement based substrates is required, a skim coat of polymer modified ground coat should be used. For excessive amount of leveling, (up to 5/8”) use a 2:1:6 (Portland cement: lime: sand) mixture. Leveling in excess of 5/8” requires 3.4 lb. expanded metal lath, and surfaces in excess of 1 inch requires furring.
4. Metal surfaces shall receive a coating of premixed acrylic polymer based adhesive, diluted with water to a consistency that can be brushed, rolled or spray applied.

3.02 PREPARATION

A. Protect contiguous work from moisture deterioration and soiling from application of the system. Provide temporary covering and other protection needed to prevent spattering of exterior finish coatings on other work.

B. Protect system, substrates and wall construction behind them from inclement weather during installation. Prevent infiltration of moisture behind system and deterioration of substrates.

C. Prepare and clean all substrates to comply with system manufacturers requirements to obtain optimum bond between substrate and adhesive for insulation.

3.03 APPLICATION

A. Comply with system manufacturer’s current published instructions for installation of system as applicable to each type of substrate indicated.

B. Applying Insulation Board:

1. A starter strip of reinforcing fiber mesh shall be applied to the wall at the base line using adhesive prior to installation of the insulation board. The starter strip shall be wide enough to adhere 4" of mesh onto the wall, be able to wrap around the board edge and cover approximately 4" on the outside surface of the EPS board. This procedure shall be followed at all exposed EPS board edges, per manufacturer's instructions.
2. The application of insulation board to vertical surfaces shall begin at the base from firm, permanent supporting substrate.
3. Board shall be applied horizontally in a running bond.
4. Precut insulation board as required to fit openings, projections, etc., stagger vertical joints and corners.
5. With a trowel, apply a bead of mixed adhesive 2 inches wide by 3/8 inch thick on the entire perimeter of the board. Apply dabs of adhesive 3/8 inches thick by 4 inches in diameter approximately 8 inches on center to the interior area. A minimum of 25% adhesive areas must result. This method of application is for masonry and concrete substrates.
6. Using a 3/8 inch notched trowel, apply uniform ribbons of mixed adhesive running horizontally to the entire surface of the insulation board. The notched method must be used on all gypsum substrates. It can also be used as an alternate method on flat substrates.
7. Apply pressure over entire surface of board to insure uniform contact and high initial grab. Abut all joints tightly and insure an overall flush level surface. Any irregularity of the insulation board greater than 1/16 inch must be rasped flush. Sand or rasp corners or intersections for a smooth finish.
8. All accessory items or expansion joints shall be installed and completely bedded in with adhesive, as are specified and located on the Drawings and/or as required.
9. The use of nails, screws or any other type of non-thermal mechanical fastener is not approved.
10. Use of plastic or metal corner beads, stop beads etc. is forbidden.
11. All areas where the exterior insulation system meets dissimilar material or terminates shall have the EPS board cut back from the adjoining material a minimum of ¼ inch to form a caulk joint and sealed (caulked) so that no water can penetrate through or behind the system. Prior to sealing (caulking) all EPS board edges shall be coated with ground coat and mesh. Allow this application to dry before sealing.

C. Standard Base (Ground) Coat:

1. Ground coat shall be stirred or mixed per manufacturer's directions.
2. Using a stainless steel trowel, apply mixed acrylic veneer base to the entire surface of the insulation board to a uniform thickness of minimum 1/16 inch.
3. Immediately place the standard reinforcing mesh against the wet acrylic veneer base coating, and by troweling form the center to the edges, embed the fabric into the coating.

   a. Reinforcing mesh shall be continuous at corners and lapped not less than 2-1/2 inches at fabric edges and add one additional layer of reinforcing mesh at corners (double wrapped), lap 8" and at architectural aesthetic joints, lap 2-1/2 inches minimum.
   b. Avoid wrinkles in embedding the reinforcing mesh.
   c. Coating shall be such that the reinforcing mesh is fully embedded.
   d. At expansion joints and end joints wrap reinforcing mesh and adhesive mixture around insulation board.
   e. At openings, add at each corner diagonally one additional 9" x 12" reinforcing mesh.
   f. Allow ground coat to dry before applying finish.

4. The acrylic veneer base coating surface shall be dry and hard before proceeding to acrylic veneer finish application.
5. The acrylic veneer base coating surface shall completely embed mesh and provide a flush skim coat coverage.

D. The final texture shall be (Parex 100% acrylic 500 Series finishes; see finish schedule on drawings for texture(s) and color) “Fine Sand” finish or as indicated on the drawing finish schedule. Match the approved sample(s) for color(s) and textures(s).

1. The integral colored finish shall be applied directly over the ground coat only after the ground coat has thoroughly dried.
2. Integral colored finish shall be applied by spraying, rolling or troweling using a stainless steel trowel, depending on the finish specified.
3. The final thickness shall not be greater than the diameter of the largest aggregate of the acrylic veneer finish material (approximately 1/16 inch).

   a. Apply the finish continuously and in one operation to the entire wall surface. Maintain a wet edge. Avoid application in direct sunlight. Do not allow the finish to set up in a distinct area. Employ sufficient workforce, scaffolding and equipment, to insure a continuous operation and uniform appearance, color and texture, free from visible mesh overlap, mesh texture telegraphing through finisher or blotchy color due to variation in hydration/drying. Surfaces shall be plumb and true.
   b. Work toward the joint and corners.
   c. Weather conditions will be a factor in the application of the finish as well as the drying time. On hot windy days the wall may be fogged with clean portable water to cool the wall and facilitate finish installation. NOTE: Water shall not be introduced to the finish material once it is on the wall.

4. Finish may be applied over caulk joints, but not over expansion joints.
5. Application of finisher over the plaster (scratch and brown) base coats shall conform to the manufacturer’s recommendations. Substrates shall be cracking free, plumb, level and true and be fully cured prior to application. Application shall be of the thickness required with matching finish.

3.04 INSTALLATION OF JOINT SEALANTS

A. Prepare joints and apply sealant of type and at locations indicated or as required to conform to Section 07900, and with EIMA “Joint Sealant Specification for Exterior Insulation and Finish Systems (EIFS)”.

B. Clean surfaces to receive sealants to comply with indicated requirements and system manufacturer’s recommendations.

C. Apply primer recommended by sealant manufacturer for surfaces to be sealed, based on adhesion and compatibility.

D. Install sealant backing to control depth and configuration of sealant joint and to prevent sealant from adhering to back of joint. Install backer rod (25% compression) in caulk joint openings to provide a depth equal to the width of the joint.

E. Apply masking tape to protect areas adjacent to sealant joints. Remove tape immediately after tooling joints flush with the ground coat surface without disturbing joint seal.

F. Apply joint sealants after base coat has cured, and allow caulk to set per manufacturers specifications prior to applying finish coat.

3.05 FINISHES

A. Coordinate with the selected system manufacturer for the use/type of clear waterproof coating (if required) and/or anti-graffiti resistant coating required to meet project and code requirements. Materials must be approved in writing by the EIFS manufacturer to be compatible with finish coat.

3.06 PROTECTION

A. Provide final protection and maintain conditions in a manner acceptable to installer and system manufacturer to insure a system without damage or deterioration at time of Substantial Completion.

3.07 ACCEPTANCE

A. Installed materials which are damaged or which in the opinion of the Architect do not conform to the specification requirements shall be removed and replace with acceptable material at no additional cost to the Owner.

B. Demonstrate proper cleaning methods and materials to Owner's maintenance personnel.

END OF SECTION

ROOFING

SECTION 075000

1. GENERAL CONDITIONS AND SPECIAL CONDITIONS

The General Conditions and Special Conditions are a part of this Section and the Contract for this work. They apply to this Section as fully as if repeated here.

1.1 SCOPE

Work in this section consists of the single ply membrane roofing system (with tapered insulation as required for drainage) over the metal deck substrate on the roofs over the elevator hoistway and adjacent spaces. The work shall include supervision of the installation of all sheet metal flashing, caulking, roof cants, scuppers, downspouts etc., and other components of the roof assembly required to achieve the specified warranty.

1.2 Other Sections:

Include metal deck, architectural sheet metal, joint sealers, mechanical and plumbing specialties.

1.3 Guarantee:

A. The contractor shall furnish a special guarantee for one year from date of acceptance by Owner to pay for all repairs to stop leaks resulting from natural deterioration of the membrane or errors in application of the membrane. The guarantee includes liability for repairs to any part of the building caused by leaks. The guarantee excludes repairs due to misuse, abuse or natural disasters.

B. A requirement of this section is the supervision of the installation of flashings, etc., which are specified to be furnished and installed under Sheet Metal Section, plumbing specialties, etc. The Contractor, under this section, shall guarantee the water-tightness of the joining between said work and the roofing.

1.4 Quality Assurance:

A. Workmen shall be trained and experienced in type of work required.

B. Installer shall be regularly performing work of types required, licensed and approved by the primary materials manufacturer for 5 years or more.

C. Manufacturer's representative of approved materials shall be present during preparation and installation to verify that manufacturer's instructions and standards are adhered to.

D. Reference Standards: NRCA Construction Standards, National Roofing Contractors Association, latest edition, as applicable to conditions encountered.

E. Application and workmanship shall conform to the latest printed specification and instructions of the manufacturer, except as otherwise specified herein.

1.5 Coordination: As required for sheet metal, plumbing, mechanical and other built-in items.

2. PRODUCTS

2.1 Roofing Assembly:

Johns Manville UltraGard Reinforced EPDM Roofing - specification No. .060R XT Single Ply fully adhered system or approved equal. Assembly shall be classed as "Fire Retardant" per paragraph 1505.1. [2010 CBC]

2.2 Materials:

A. JM – UltraGard .060R XT single ply membrane (rolled Material)

B. JM - EPDM Bonding Cement.

C. JM – EPDM – Seam Tape.

D. JM – EPDM – Reinforced Termination Strip

E. JM – EPDM Lap Cement.

F. JM – EPDM Lap Caulk.

G. Base Material: Metal Deck

2.3 INSULATION

A. Rigid

1. Polyisocyanurate Foam Core:

a. Johns Manville ENRGY 3

3. Tapered rigid: ASTM C208 factory-fabricated wood fiberboard, or ASTM C728 perlite-aggregate insulation with slope shown on the Drawings, U.L. and F.M. rated and labeled, minimum 13 mm (1/2 in.) thickness. Direction changes shall use mitered boards.

4. Tapered edge strip: Rigid wood fiberboard or perlite insulation with maximum 40 mm/m (1/2 in./ft) slope, 125 mm/m (1-1/2 in./ft) slope approved for use at seal-offs.

2.4 Accessory Systems:

A. Base Flashings: J-M Specifications FE-1, or FE-4.

3. EXECUTION

3.1 Pre-conditions:

A. Do not apply roofing over wet or damp substrate. Check drainage.

B. Surfaces shall be smooth, dry and swept clean and free of dust, debris or other loose materials. Metal decks shall be free from sharp projections and other depressions.

C. Roof sub-surfaces and other construction adjoining or affecting the work of this Section shall be examined before any work is started and the ARCHITECT shall be notified of any defects which would be detrimental to any of the work under this section. The application of roofing materials to the roof shall constitute acceptance of the roof surface acceptable.

3.2 Installation

A. Install roofing per Manufacturer's guidelines and specifications.

3.3 Storage:

Store roll goods on end in dry place, in a location to avoid edge damage; do not overload any part of roof.

3.4 Contractor Guidelines

A. No roofing material or insulation shall be installed when moisture, such as dew, can be seen or felt on the surface where material(s) are to be installed.

B. No materials shall be installed when foaming, blistering, or bubbling of the hot asphalt occurs.

C. Moppings of hot (EVT) asphalt shall be continuous and applied at a nominal rate of 25 pounds per 100 square feet. All interply asphalt shall be special steep, Type IV, with 210 degrees minimum softening point.

D. Temperatures at the kettle/tanker shall be controlled so that asphalt temperature shall not exceed the asphalt manufacturer's maximum finished blowing temperature recommendations.

E. All membrane deficiencies, such as voids, bridging, fish mouths, cuts, tears, and the like, shall be repaired in an acceptable manner. Incorporate into the repair as many plies as are affected by the deficiency.

END OF SECTION

FLASHINGS AND ARCHITECTURAL SHEET METAL

SECTION 076200

1. GENERAL CONDITIONS AND SPECIAL CONDITIONS

The General Conditions and Special Conditions are a part of this Section and the contract for this work. They apply to this section as fully as if repeated here.

1.1 DESCRIPTION

This Section includes sheet flashings, and general architectural sheet metal work required throughout the project except sheet metal items or installations particularly included in other sections. Include all miscellaneous items called for on the drawings and not specifically mentioned in the specifications.

1.2 OTHER SECTIONS

Flashings and counter flashing of pipes, flues, conduits, and ductwork passing through roofing or membranes are the responsibility of the trades installing these items.

1.3 QUALITY ASSURANCE

A. Work performed only by workmen trained and experienced in this specialty.

B. Reference Standards: Architectural Sheet Metal Standards published by SMACNA as applicable or as referenced herein; NCRA Construction Details, National Roofing Contractors Association, August, 1980, as applicable.

1.4 SUBMITTALS

A. Required for Architect's approval: Manufacturer's data on specified primary materials.

B. Shop Drawings: Required for Architect's approvals; develop details for corners and intersections of running stock that may not be shown on architectural drawings.

2. PRODUCTS

2.1 PRIMARY MATERIALS

A. Sheet Metal for copings, parapet caps, etc.; ASTM A525, commercial-class galvanized, exposed sheet metal to be Paint-Lok; 24 gauge minimum and as noted or required by referenced standards for application and details encountered.

B. Solder: ASTM B-32, Type 50-50, resin flux.

C. Fastenings and Screws: #8 Hex-slotted head, stainless steel, 1" diameter neoprene washers with non-corrosive metal caps, provide length for 1" min. penetration into backing.

D. Reglets: Fry, Morrison, or approved equal, with factory fabricated inside and outside corner units for all such conditions.

E. Sealants: Conform to requirements of Section 079200.

F. Building Paper: F.S. UU-B-790a, Type II, Grade E, Style 8 and ASTM C171, Vapor Perms 0.18 or better, (ASTM E 96 Proc. A) Orange Label Sisalkraft or approved equal.

3. EXECUTION

3.1 COORDINATION

A. Comply with layouts for other trades, incorporate adjustments as necessary.

B. Schedule work to sequence correctly with other trades. Note proper sequence of installation of sheet metal work and waterproofing, (See Section 7A Waterproofing).

C. Make all measurements, templates, and patterns; supply all necessary information for proper fabrication and installation. Check all measurements with surrounding work and compare dimensions and details of this work with those of adjoining work by other trades to insure against discrepancies.

D. Coordinate installation of all sheet metal work to be built into, or in connection with the waterproofing work so that all connections and flashings will be watertight and weathertight.

3.2 FABRICATION

A. Sheet Metal: Shape to form breaks with rounded bends only. Interlock metal with full allowance for expansion and contraction. Fasten sheets with loose lock and slip joints to permit adjustments in installation and remain watertight.

B. Joints of Sheets shall be butt type with back up sleeve and cap over, with joint sealed with sealant; SMACNA Plate 38, Figure C and NCRA Construction Details 1980, Detail G. Locate joints for symmetrical appearance when visible to public.

C. Shop Fabricate inside and outside corners, expansion joints and compound intersections of flashings. Form assemblies with watertight joints, solder, or lapped and riveted joints over sealer tape. (See plans for details).

D. Joints for counterflashing in Reglets must be special detail, interlocking tab fabricated to pattern of counterflashing; see Morrison, Inc. instructions packed with reglets.

E. Apply building paper lapped over framing under parapet caps and copings. Turn this paper down over wall building paper to counterflash the top of the wall paper.

F. Expansion/Contraction

1. Fastening through running units is not permitted unless specially noted.

2. Provide for expansion joints in straight runs at 10'-0" max. o.c. and at each side of outside or inside corner assemblies and compound assemblies.

G. Clips and hold down cleats: Do not omit; furnish where shown or required by reference standards and as required to properly secure material.

3.3 GALVANIC PROTECTION

Where galvanized or pre-finished sheet metal will come into contact with dissimilar metal such as aluminum windows, install separation of building paper or asphalt strip to prevent electrical connection of the two metals.

3.4 CLEANING AND PRIMING

All galvanized metal to be painted shall be cleaned with a solution consisting of eight (8) ounces of copper sulphate to one (1) gallon of warm water before priming.

3.5 COMPLETION

A. Remove unwanted debris from this work.

END OF SECTION

SEALANTS AND CAULKING

SECTION 079200

1. GENERAL CONDITIONS AND SPECIAL CONDITIONS:

The General Conditions and Special Conditions are a part of this Section and the Contract for this work. They apply to this Section as fully as if repeated here.

1.1 WORK INCLUDED

A. This Section sets forth general requirements applicable to all sealant work and materials required throughout the project regardless of which trade is responsible for installation, including, but not limited to:

1. Pour joints, construction joints, separation joints.

2. Roof or floor penetrations not specified under Mechanical or Electrical, or other Sections.

3. At all door frames, louvers, etc.

4. All other Sealants and Caulking as indicated on drawings.

1.2 QUALIFICATIONS

A. Workmen installing sealant materials shall be trained and experienced in work of the types required.

B. Manufacturers of sealant materials shall have authorized representatives locally available for jobsite inspections and assistance, and to substantiate guarantee - See Paragraph 1.4.

1.3 GENERAL REQUIREMENTS

A. Submittals specified herein shall be provided as part of the submittals of each Technical Section of work under which sealant work is to be provided.

B. Submit material list including producer's technical data, specifications and installation instructions at least two (2) weeks prior to installation.

C. All joint filler, primers, or other materials used in conjunction with the sealants shall be of such composition as to not cause staining of the sealant or the materials to which they are applied.

1.4 SPECIAL GUARANTEE

Shall warrant sealant work against defect of materials or defective workmanship against entry of water into or through the interior spaces of the structure or its parts due to failure or defects; and, checking, cracking, crazing or other objectionable changes. Duration shall be for one year from date of acceptance of project. Provide field inspection as required to certify proper product installation, and that the work of this Section has been performed in strict compliance with all Contract Requirements, as well as manufacturers' specifications, recommendations, and instructions.

2. PRODUCTS

2.1 MATERIALS

A. Shall be Producer's Standard Type and formulation factory prepared and packaged.

B. Auxiliary primers, thinners, separators and cleaners as necessary and as approved by manufacturer of primary sealant material.

C. Colors for exposed materials - as selected from full range of standard series available. Unless specified or directed otherwise, use materials to match the color of adjacent materials. Where adjacent materials on each side of the joint are different colors, the Architect will select sealant colors.

D. Sealants and caulking shall be elastomeric type throughout - oil based materials will not be acceptable.

E. Backing filler: Where required polyethylene or polyurethane foam strips as necessary for force-fit into the joints required. Strip thickness under sealant- 1/2 inch minimum, 1 inch maximum, or as necessary to meet specified requirements for sealant depths. Filler shall be compatible with caulking.

Not required for joint widths less than 1/4” unless noted otherwise. Fillers shall be compatible with sealant and sufficiently firm for back up of sealant material.

F. Primers: As recommended by the sealant manufacturer for use in conjunction with the sealant for the application on to the various types of materials to which the sealer is applied.

G. Cleaners: where required in lieu of primers: As recommended by the sealant manufacturer.

H. Miscellaneous Applications: One part polysulfide, FS TT-S-0023OC

1. Elastoseal #230, by Pacific Polymers, 15081 Moran Street, Unit E, Westminster, CA 92683, or approved equal.

I. Horizontal surfaces, pour joints, construction joints, closure strips as required. Multi-part urethane sealant, FS TT-S-00227B, non-sag or pourable consistency, non-staining, minimum hardness of shore A-18.

1. Sonneborn SL2

J. Crack control joints, Two-part self-leveling polyurethane sealant.

1. Sonneborn SL2

K. Sealant for General Exposed Work:

1. Extent: Exposed exterior and interior joints throughout the project as shown on the drawings.

2. Sealant: Sonneborn NP2

3. BACKING FILLER: As specified under E above.

4. DEPTH of sealant when installed, at its thinnest section, shall not be less than 1/4"; except when used at plywood or drywall or other like materials less than 3/4" thick, and at trim conditions, then sealant shall be applied for full depth of joint formed by such materials.

3. EXECUTION

3.1 PRIOR TO STARTING WORK

Joint surfaces shall be clean and sound.

3.2 AT COMPLETION

Remove unwanted debris resulting from this work. Clean adjacent surfaces as work progresses. Sealants shall have full and complete adhesion with contact surfaces; shall have a thoroughly smooth, extruded appearance and shall be watertight throughout.

Carefully study the drawings and furnish and install the proper caulking at each point where called for on drawings plus at all other points where caulking is essential in maintaining the continued integrity of the watertight barrier.

3.3 PREPARATION

A. Clean sealant joint surfaces free from dirt, dust, laitance or other matter or particles inhibitive to complete and secure adhesion; using whatever procedures are necessary, and in accordance with manufacturer's or manufacturer's representative instructions.

B. Remove any temporary materials set or used to form joints for sealants.

C. Prime joint surfaces in accord with sealant manufacturer's instructions and recommendations applicable to substrate materials.

3.4 INSTALLATION

A. Sealants shall be installed prior to adjacent asphaltic, liquid waterproofing, finish painting or other work which may contaminate joint surfaces.

B. Backing fillers shall be installed in longest single lengths available and practical; and set by forcing straight into the joint pocket. Stretching fillers lengthwise to aid installation will not be permitted. Set fillers to required depths using wood or other gauging tools formed for the purpose.

C. Sealants shall be extruded into place; accurately applied in one continuous operation; to full joint or pocketed depths and width required; with sufficient pressure to assure complete and continuous contact and adhesion. Finish joints smooth and flush with adjacent surface unless detailed to be finished below the surface.

END OF SECTION

HOLLOW METAL WORK

SECTION 081113

1. GENERAL CONDITIONS AND SPECIAL CONDITIONS

The General Conditions and Special Conditions are a part of this Section and the contract for this work. They apply to this Section as fully as if repeated here.

1.1 SCOPE

A. Work Included: Furnish materials and perform labor required to execute this work as indicated on the drawings, as specified herein and as necessary to complete the Contract, including but not limited to these items:

1. Hollow metal doors, including door louvers where shown.

2. Pressed or rolled metal frames for doors.

3. Installation of hollow metal doors, pressed steel frames and finish hardware.

4. Shop prime coats.

1.2 REFERENCE STANDARDS

A. Standards and specifications of the Steel Door Institute. All doors shall be guaranteed in accordance with this standard.

B. Fire Rated Doors and Frames: U.L. Requirements, N.F.P.A. and State Fire Marshal regulations.

1.3 GENERAL REQUIREMENTS

A. Field Conditions: Verify drawing dimensions with actual field conditions. Inspect related work and adjacent surfaces. Report to the Architect all conditions which prevent proper execution of this work.

B. Shop Drawings: In accordance with the General Conditions, submit for approval the following: Doors and frames, showing gages and types of metal, frame anchorage, construction, location of hardware and group, reinforcements, and preparation to receive hardware. Include a schedule relating the type of door and frame (including label) to be installed in each scheduled door opening or place of installation.

C. Labeled Openings: Where labeled openings are scheduled or are required by governing codes, construct doors and frames in strict accordance with the requirements of Underwriter's Laboratories, Inc. and attach labels for the indicated classification.

1.4 APPROVED FABRICATORS

Amweld, Ceco, Forderer Cornice Works, Overly, Atlas Universal Service Corp., Stiles Custom Metal Corp., or Melatx Inc. Other fabricators shall request approval by Architect prior to acceptance of bid. Note: fabricator must have tested fire rated assemblies for rating without astragals and also be capable of manufacturing to maximum sizes permitted by U.L. and other rating agencies.

1.5 GUARANTEE

In accordance with the General Conditions, submit written guarantee in approved form that all defective materials or workmanship reported within a period of one (1) year after final acceptance will be promptly repaired or replaced to the satisfaction of the Owner.

1.6 PRODUCT HANDLING

A. Protection:

1. Deliver, store, and handle all metal frames in a manner to prevent damage and deterioration.

B. Replacements: In the event of damage, immediately make all repairs and replacements necessary to the approval of the Architect and at no additional cost.

2. PRODUCTS

2.1 DOOR CONSTRUCTION

A. Materials and Fabrication: Flush type, 1-3/4" thick, edges beveled for latch and meetings, 18 gauge roller leveled carbon steel face panels with edges finished flush. Reinforce top and bottom edges with 16 gauge channels, make tops watertight. Reinforce edges with 14 gauge full height channels; reinforce interior bodies vertically and horizontally with interlocking 18 gauge channels or Z members spot welded to faces at 4" centers. Install reinforcing, 12 gauge minimum, for locks and surface hardware, 1/4" plate minimum for hinges and strikes, 9 gauge minimum, for other Mortise hardware and as required for U.L. labeling. Sound deaden all internal voids. Exposed seams at edges or on face of doors are not acceptable.

B. Reinforcements: Cut out and reinforce doors for hardware in accordance with templates. Drill and tap to receive hardware.

C. Louvers: Where noted shall be stationary 18 gauge sight proof stock design with #14-18 bronze insect screens. Rated doors with louvers shall have U.L. listed louver assembly for exterior locations; net ventilation area 50% minimum.

2.2 FRAME CONSTRUCTION

A. Materials and Fabrication: Combination frame buck and trim type, integral stops not less than 5/8" in depth. Provide 16 gauge minimum rolled prime carbon steel for frame unless otherwise noted, install reinforcing, 1/4" plate minimum for hinges and strikes, 7 gauge minimum for other mortise hardware and 12 gauge minimum for surface hardware. Joints shall be mitered and continuously welded for full depth and width; dressed flush and smooth. All frames shall be reinforced, cut, drilled and tapped at the factory to proper templates. Provide cover boxes at back of all cut outs. Provide temporary spreaders for shipping. Surfaces shall be free of warps, wave, buckle, and other defects.

B. Reinforcements: Cut out and reinforce frames to receive all hardware. Drill and tap in accordance with templates. Provide 12 gauge minimum reinforcing plates, spot welded to door closers and brackets. Reinforce head members with 12 gauge steel channel full length of head-frame, where door openings exceed 42" in width.

2.3 ANCHORS

Provide 12 gauge steel anchors, spot welded to inside of frames, fixed or adjustable as required by wall conditions, spaced not exceeding 24" o.c. at jambs and head. Jamb anchors

shall also be located near tops and bottoms of frames. Where installed in masonry walls, arrange anchors to provide vertical adjustments to coincide with horizontal masonry joints. Attach 12 gauge steel floor clips, spot welded to each jamb, and punched for anchorage to floor. Do not remove steel spreader until frames are securely anchored in place square and plumb.

2.4 FIRE RATINGS

Frames and doors shall conform to requirements of U.L. or other agency acceptable to the local Fire District. Details necessary for the rating shall take precedence over any indicated or specified requirements unless greater protection or gauges are shown.

2.5 FINISH

Doors and Frames: After assembly, grind door edges smooth and fill flush with mineral filler to conceal seams. Follow with thorough cleaning, rinsing and phosphate coating of all exposed surfaces. F.S. TT-C-490, Type I. Give doors and frames shop coat of baked on rust-inhibitive metal primer as standard with manufacturer, not less than 1 mil. thick. Finish paint is specified in Painting, Section 09900.

3. EXECUTION

3.1 INSTALLATION

A. Setting of frames to maintain scheduled dimensions, hold head level and maintain jambs plumb and square.

B. Secure anchorages and connections to adjacent construction.

C. Apply hardware in accord with hardware manufacturer's templates and instructions, adjust as necessary for proper fit and operation.

D. Installation of labeled doors shall conform to U.L. and N.F.P.A. No. 80 Requirements.

3.2 SEALANT

A. Seal perimeter of door frames and window frames where shown or required to fill space between frame and adjoining material. Sealant materials and applicable requirements of Section 079200 apply to this work.

3.3 PRIME COAT TOUCH-UP

A. Immediately after erection, areas where prime coat has been damaged shall be sanded smooth and touched up with same primer as applied at shop. Remove all rust from areas before repairing damage.

END OF SECTION

ACCESS DOORS AND PANELS

SECTION 083100

1. GENERAL

1.1 SUMMARY

A. Section Includes: Furnishing and installation of access doors and panels where indicated or noted on Architectural Drawings.

B. Product Installed But Not Furnished Under This Section:

1. Install access doors and panels furnished by other trades under plumbing, fire protection, mechanical and electrical work where necessary for operation and maintenance of concealed equipment, valves, cleanouts, controls, and other similar devices requiring access.
2. Coordinate requirements with Divisions 22, 23 and 26.

C. Related Sections:

1. Section 099100 – Painting.
2. Division 22 – Plumbing: –
3. Division 23 – Mechanical:
4. Division 26 – Electrical:

1.2 SUBMITTALS

A. General: Submit in accordance with General Conditions.

B. Product Data: Submit for each type of access door and panel.

C. Shop Drawings: Include complete schedule indicating types, general locations, sizes, wall and ceiling construction details, latching and locking provisions, and other pertinent data.

1.3 QUALITY ASSURANCE

A. Fire-Resistance Ratings: Appropriate UL or Warnock Hersey label required on fire rated assemblies.

B. Size Variations: Obtain Architect's acceptance of manufacturer's standard size units which may vary from sizes indicated.

C. Coordination: Furnish inserts and anchoring devices which must be built into other work for installation of access panels. Coordinate delivery with other work to avoid delay.

2. PRODUCTS

2.1 MANUFACTURERS

A. Acceptable Manufacturers

1. Bar-Co., Enterprise, AL:
2. Cesco Products, Minneapolis, MN.
3. Eldmor Manufacturing Col, City of Industry, CA.
4. JL Industries, Bloomington, MN.
5. Karp Associates, Inc., Maspeth, NY.
6. Milcor Incorporated, Lima, OH.
7. Nystrom, Inc., Minneapolis, MN.

2.2 ACCESS DOORS MATERIALS AND FABRICATION

A. Steel Assemblies: Fabricate of sheet steel, ASTM A366.

B. Frames: Fabricate typical units with metal thickness of not lighter than 16 gage unless otherwise required for fire-rated or security conditions.

1. Fabricate with exposed flange of nominal 1 inch wide around perimeter for assemblies installed in following construction:

a. Exposed masonry or concrete.
b. Ceramic tile.

2. Fabricate with galvanized casing bead welded to perimeter of frame for assemblies installed in gypsum board surfaces.
3. Fabricate with galvanized expanded metal lath and exposed casing bead welded to perimeter of frame for assemblies installed in full-bed gypsum plaster or cement plaster surfaces.

C. Non-Rated Doors: For openings 12 inches by 12 inches or less, fabricate units with metal thickness of not lighter than 16 gage; for openings greater than 12 inches by 12 inches, fabricate units with metal thickness of not lighter than 14 gage sheet materials.

4. Non-Rated Recessed Doors: Fabricate with recessed door panel to allow application of gypsum board finish on door. Equip with concealed center pivot hinge.
5. Typical: Equip with concealed spring hinges or concealed continuous piano hinge designed to open 175 degree minimum.

D. Fire-Rated Flush Doors: Fabricate of not lighter than 20 gage sheet materials of sandwich type construction with manufacturer's standard core. Equip with continuous piano hinge designed to open 175 degree minimum.

E. Locking Devices: Provide flush, screwdriver-operated cam locks of number required to hold door in flush, smooth plane when closed.

F. Locking Devices: Provide key controlled locking device for each assembly in Public areas. Key all locks alike, unless directed otherwise. Furnish six keys.

2.3 FINISHES

A. Steel Assemblies:

1. Phosphate or chemically treat surfaces before application of prime coat finish.
2. Apply rust inhibitive primer to produce uniform smooth coat at 2.0 mils minimum dry film thickness.

B. Galvanized Steel Assemblies, Field Finish: See Section 09900.

3. EXECUTION

3.1 EXAMINATION

A. Examine conditions and proceed with Work in accordance with general conditions.

1. Verify rough openings are correctly located, sized and prepared for installation.

3.2 INSTALLATION

A. Access doors: Install plumb, level, square, and rigidly secured in accordance with manufacturer's written recommendations.

1. Position for convenient access to concealed work requiring access.

3.3 ADJUSTING

A. After installation, test and adjust doors and hardware for smooth operation.

END OF SECTION

OVERHEAD COILING GRILLES

SECTION 083326

1. GENERAL CONDITIONS AND SPECIAL CONDITIONS

The General Conditions and Special Conditions are a part of this Section and the contract for this work. They apply to this Section as fully as if repeated here.

1.1 SCOPE

A. Size and extent of overhead coiling grilles is shown on the Drawings.

1. Stainless Steel Vehicular and Pedestrian Entrance/Exit security rolling grilles.

B. Furnished materials shall include all curtains, bottom bars, guides, brackets, hoods, operating mechanisms and any special features.

C. Related Work Specified Elsewhere:

1. Section 05 50 00 Metal Fabrications:
2. Section 09 91 00 Painting:

D. Work to be included by others: Design of, material for and preparation of grille openings but not limited to structural or miscellaneous iron work, access panels, finish painting, electrical wiring, conduit and disconnect switches.

1.2 QUALITY ASSURANCE:

A. Furnish each overhead coiling grille as a complete unit produced by one manufacturer, including hardware, accessories, mounting and installation components.

B. Unless otherwise acceptable to the Architect, furnish overhead coiling grille units by one manufacturer for entire project.

C. All rolling grilles shall be designed to a standard maximum of 25 cycles per day and an overall maximum of 50,000 operating cycles for the life of the grille.

1.3 SUBMITTALS:

A. Product Date: Submit manufacturer's product data, roughing-in diagram and installation instructions for each type and size of overhead coiling grille. Include operating instructions and maintenance information.

B. Shop Drawings: Submit Shop Drawings for special components and installations which are not fully dimensioned or detailed on manufacturer's data sheets.

2. PRODUCTS

2.1 ACCEPTABLE MANUFACTURERS:

A. Available Manufactures: Subject to compliance with requirements, manufacturers offering products which may be incorporated in work include, but not necessarily limited to, the following:

1. The Cookson Co.

B: Type:

1. Cookson Type JMG - Motor (Gearhead - Horizontal) Operated Rolling Grille Stainless Steel Finish - Tube Mounted - Standard Pattern 5014-M92 – Featheredge

2.2 MATERIALS

A. The grille curtain shall be Pattern 5014-M92 constructed of solid 5/16" diameter horizontal stainless steel rods on 2" centers with 1/8" stainless steel hinged vertical connecting links (5/8" deep by 3-3/4" high) 9" on center. The finish on the rods and links shall be #2B.

B. The bottom bar shall consist of a stainless steel tube measuring 4" high by 2" deep and shall include the Cookson Featheredge safety edge system. The finish on the bottom bar shall be #2B.

C. The guides shall be constructed of 1/4" thick continuous aluminum wall angles connected to 1-1/2" by 2-1/2" by 1/8" thick continuous extruded aluminum guide section. Continuous nylon wearstrips shall be inserted on both sides of the guide to eliminate metal-to-metal contact. The aluminum wall angles and the aluminum guide shall be 204-R1 clear anodized.

D. The brackets shall be constructed of steel not less than 1/4” thick. The finish on the brackets shall be one (1) coat of aluminum prime paint.

E. The barrel shall be steel tubing of not less than 6” in diameter. Oil tempered torsion springs shall be capable of correctly counter balancing the weight of the curtain. The barrel shall be designed to limit the maximum deflection to .03” per foot of opening width. The springs shall be adjusted by means of an exterior wheel. The finish on the barrel shall be one (1) coat of bronze rust-inhibiting paint.

F. The hood shall be fabricated from 24 gauge stainless steel sheet and shall be formed to fit the curvature of the brackets. The finish on the hood shall be #4.

2.3 OPERATION

A. The grille shall be operated at a speed of 2/3 foot per second by an open drip-proof electric motor with gear reducer in oil bath. The motor operator shall include a geared limit switch, and an electrically interlocked emergency chain operator. The motor starter shall be housed in a NEMA 1 housing and include a magnetic reversing starter size 0, a 24 volt control transformer, and complete terminal strip to facilitate field wiring. The motor operator shall be activated by [a 3 button push-button station] [other controls as selected] in a NEMA 1 enclosure. The motor shall be size as required by the grille [115 volts single phase] [230 volts single phase] [230 volts three

phase] [460 volts three phase]. The motor operator shall be mounted to the grille bracket as shown on drawings. All motor operators shall be U.L. listed.

B. The grille shall include the Featheredge Rolling Grille Safety Edge System as manufactured by The Cookson Company and shall include the following features:

1. The Featheredge shall be installed on the bottom bar of the grille and shall automatically reverse the grille if the device detects an obstruction in the downward travel of the grille.
2. The Featheredge shall consist of a rubber boot attached below the bottom bar with an electrical switch secured to the back of the bottom bar. The Featheredge shall operate with air wave technology and shall not rely on pneumatic pressure or electrical strip contacts to operate properly. The Featheredge shall create an air wave that shall be detected and reverse the direction of the grille.
3. The operation of the Featheredge shall not be subject to interferences by temperature, barometric pressure, water infiltration, or cuts in the rubber boot.
4. The Featheredge shall be connected to the motor operator with a coil cord.

2.3 LOCKING MECHANISMS

A. Motor operated grilles shall be secured by means of a cylinder lock in the bottom bar, electrically interlocked to prevent the motor from operating when the grille is locked.

3. EXECUTION

3.1 INSTALLATION:

A. Install door and operating equipment complete with necessary hardware, jamb and head mold strips, anchors, inserts, hangers and equipment supports in accordance with final Shop Drawings, manufacturers instructions and as specified herein.

1. All Cookson Stainless Steel Rolling Grilles shall be installed by an authorized Cookson Distributor.

B. Upon completion of installation including work by other trades, lubricate, test and adjust doors to operate easily, free from warp, twist or distortion and fitting weather-tight for entire perimeter.

3.2 WARRANTY

A. All Cookson Stainless Steel Rolling Grilles shall be warranted for a period of 2 years from the time of shipment against defects in workmanship and materials

END OF SECTION

ALUMINUM-FRAMED ENTRANCES AND STOREFRONTS

SECTION 08 43 13

1. GENERAL CONDITIONS AND SPECIAL CONDITIONS:

The General Conditions and Special Conditions are a part of this Section and the Contract for this work. They apply to this Section as fully as if repeated here.

1.1 DESCRIPTION:

A. This Section sets forth general requirements applicable to all aluminum frames entrances and storefront work and materials required throughout the project regardless of which trade is responsible for installation, including, but not limited.

1. Aluminum-framed storefront, with vision glass.
2. Aluminum doors and frames, with vision glass.
3. Weather stripping
4. Perimeter Sealant

B. Related sections include:

1. Section 07 92 00 Sealants and Caulking: Perimeter Sealant and back-up materials.
2. Section 08 71 00 Finish Hardware:
3. Section 08 81 00 Glazing:

1.2 REFERENCED STANDARDS:

A. AAMA CW-10 - Care and Handling of Architectural Aluminum From Shop to Site; American Architectural Manufacturers Association; 2004.

B. AAMA 501.2 - Field Check of Metal Storefronts, Curtain Walls, and Sloped Glazing Systems for Water Leakage; American Architectural Manufacturers Association; 2003 (part of AAMA 501).

C. AAMA 611 - Voluntary Specification for Anodized Architectural Aluminum; American Architectural Manufacturers Association; 1998.

D. AAMA 1503.1 - Voluntary Test Method for Thermal Transmittance and Condensation Resistance of Windows, Doors and Glazed Wall Sections; American Architectural Manufacturers Association; 2009.

E. ASTM B 209 - Standard Specification for Aluminum and Aluminum-Alloy Sheet and Plate; 2007.

F. ASTM B 221 - Standard Specification for Aluminum and Aluminum-Alloy Extruded Bars, Rods, Wire, Profiles, and Tubes; 2008.

G. ASTM E 283 - Standard Test Method for Determining the Rate of Air Leakage Through Exterior Windows, Curtain Walls, and Doors Under Specified Pressure Differences Across the Specimen; 2004.

H. ASTM E 330 - Standard Test Method for Structural Performance of Exterior Windows, Doors, Skylights and Curtain Walls by Uniform Static Air Pressure Difference; 2002.

I. ASTM E 331 - Standard Test Method for Water Penetration of Exterior Windows, Skylights, Doors, and Curtain Walls by Uniform Static Air Pressure Difference; 2000.

1.3 ADMINISTRATIVE REQUIREMENTS

A. Coordinate with installation of other components that comprise the exterior enclosure.

B. Preinstallation Meeting: Conduct a preinstallation meeting one week before starting work of this section; require attendance by all affected installers.

1.4 SUBMITTALS

A. See Section 01 33 00 - Submittal Procedures.

B. Product Data: Provide component dimensions, describe components within assembly, anchorage and fasteners, glass and infill, internal drainage details.

C. Shop Drawings: Indicate system dimensions, framed opening requirements and tolerances, affected related Work, expansion and contraction joint location and details, and field welding required.

D. Design Data: Provide framing member structural and physical characteristics, engineering calculations, dimensional limitations.

E. Samples: Submit two samples 2 x 2 inches in size illustrating finished aluminum surface, glass, infill panels, glazing materials.

1.5 QUALITY ASSURANCE

A. Manufacturer and Installer Qualifications: Company specializing in manufacturing aluminum glazing systems with minimum three years of documented experience.

B. Test reports from AAMA certifying performance as required by ASTM standards cited above in article 1.03.

1.6 DELIVERY, STORAGE, AND HANDLING

A. Handle products of this section in accordance with AAMA CW-10.

B. Protect finished aluminum surfaces with wrapping. Do not use adhesive papers or sprayed coatings that bond to aluminum when exposed to sunlight or weather.

1.7 FIELD CONDITIONS

A. Do not install sealants when ambient temperature is less than 40 degrees F. Maintain this minimum temperature during and 48 hours after installation.

1.8 WARRANTY

A. See Section 01 78 00 for additional warranty requirements.

B. Correct defective Work within a five year period after Date of Substantial Completion.

C. Provide five year manufacturer warranty against failure of glass seal on insulating glass units, including interpane dusting or misting. Include provision for replacement of failed units.

2. PRODUCTS

2.1 MANUFACTURERS

A. Basis of Design: Efco Corporation; Series 401; Glazed Screw Spline; www.efcocorp.com

B. Other Acceptable Manufacturers:

1. Arcadia, Inc. www.arcadiainc.com
2. United States Aluminum Corp; Product: Series 451: www.usalum.com.
3. Substitutions: See Section 01340 for Substitution Request.

2.2 STOREFRONT

A. Aluminum-Framed Storefront: Screw spline assembly. Factory fabricated, factory finished aluminum framing members with infill, and related flashings, anchorage and attachment devices.

1. Glazing Rabbet: For 1 inch insulating glazing.
2. Glazing Position: Center.
3. Vertical Mullion Dimensions: 2 inches wide by 4-1/2 inches deep.
4. Design Wind Load: 20 lbf/sq ft, positive and negative.
5. Water Leakage Test Pressure Differential: 8 lbf/sq ft.
6. Air Infiltration Test Pressure Differential: 6.24 psf.
7. Finish: Class I natural anodized.

B. Performance Requirements:

1. Design and size components to withstand the specified load requirements without damage or permanent set, when tested in accordance with ASTM E 330, using loads 1.5 times the design wind loads and 10 second duration of maximum load.
2. Member Deflection: Limit member deflection to 1/175 in any direction, with full recovery of glazing materials.
3. Movement: Accommodate movement between storefront and perimeter framing and deflection of lintel, without damage to components or deterioration of seals.
4. Air Infiltration: Limit air infiltration through assembly to 0.06 cu ft/min/sq ft of wall area, measured at specified differential pressure across assembly in accordance with ASTM E 283.
5. System Internal Drainage: Drain to the exterior by means of a weep drainage network any water entering joints, condensation occurring in glazing channel, and migrating moisture occurring within system.
6. Expansion/Contraction: Provide for expansion and contraction within system components caused by cycling temperature range of 170 degrees F over a 12 hour period without causing detrimental effect to system components, anchorages, and other building elements.

2.3 COMPONENTS

A. Aluminum Framing Members: Extruded 6063-T6 alloy aluminum sections, thermally broken with interior section insulated from exterior, drainage holes and internal weep drainage system.

1. Glazing stops: Applied.
2. Structurally Reinforced Members: Extruded aluminum with internal reinforcement of structural steel member.

B. Doors: Glazed aluminum.

1. Thickness: 1-3/4 inches.
2. Top Rail: 4 inches wide.
3. Vertical Stiles: 4-1/2 inches wide.
4. Bottom Rail: 6 inches wide.
5. Finish: Same as storefront.

2.4 MATERIALS

A. Extruded Aluminum: ASTM B 221 (ASTM B 221M).

B. Fasteners: Stainless steel.

C. Perimeter Sealant: Type B (Two-part Polyurethane) specified in Section 07 90 05.

D. Glass: As specified in Section 08 81 00.

E. Glazing Gaskets: Type to suit application to achieve weather, moisture, and air infiltration requirements.

2.5 FINISHES

A. Class I Natural Anodized Finish: AAMA 611 AA-M12C22A41 Clear anodic coating not less than 0.7 mils thick.

2.6 HARDWARE

A. Door Hardware: As specified in Section 08 71 00.

B. Weather stripping: Wool pile, continuous and replaceable; provide on all doors.

C. Sill Sweep Strips: Resilient seal type, retracting, of neoprene; provide on all doors.

2.7 FABRICATION

A. Fabricate components with minimum clearances and shim spacing around perimeter of assembly, yet enabling installation and dynamic movement of perimeter seal.

B. Accurately fit and secure joints and corners. Make joints flush, hairline, and weatherproof.

C. Prepare components to receive anchor devices. Fabricate anchors.

D. Coat concealed metal surfaces that will be in contact with cementitious materials or dissimilar metals with bituminous paint.

E. Arrange fasteners and attachments to conceal from view.

F. Reinforce components internally for door hardware.

G. Reinforce framing members for imposed loads.

H. Finishing: Apply factory finish to all surfaces that will be exposed in completed assemblies.

1. Touch-up surfaces cut during fabrication so that no natural aluminum is visible in completed assemblies, including joint edges.

3. EXECUTION

3.1 EXAMINATION

A. Verify dimensions, tolerances, and method of attachment with other work.

B. Verify that wall openings and adjoining air and vapor seal materials are ready to receive work of this section.

3.2 INSTALLATION

A. Install wall system in accordance with manufacturer's instructions.

B. Attach to structure to permit sufficient adjustment to accommodate construction tolerances and other irregularities.

C. Provide alignment attachments and shims to permanently fasten system to building structure.

D. Align assembly plumb and level, free of warp or twist. Maintain assembly dimensional tolerances.

E. Provide thermal isolation where components penetrate or disrupt building insulation.

F. Install sill flashings. Turn up ends and edges; seal to adjacent work to form water tight dam.

G. Where fasteners penetrate sill flashings, make watertight by seating and sealing fastener heads to sill flashing.

H. Coordinate attachment and seal of perimeter air and vapor barrier materials.

I. Pack fibrous insulation in shim spaces at perimeter of assembly to maintain continuity of thermal barrier.

J. Install operating sash.

K. Set thresholds in bed of mastic and secure.

L. Install glass and infill panels in accordance with Section 08 81 00, using glazing method required to achieve performance criteria.

M. Install perimeter sealant in accordance with Section 07 90 05.

N. Touch-up minor damage to factory applied finish; replace components that cannot be satisfactorily repaired.

3.3 TOLERANCES

A. Maximum Variation from Plumb: 0.06 inches every 3 ft non-cumulative or 1/16 inches per 10 ft, whichever is less.

B. Maximum Misalignment of Two Adjoining Members Abutting in Plane: 1/32 inch.

3.4 FIELD QUALITY CONTROL

A. See Section 01 45 00 – Quality Control, for independent testing and inspection requirements. Inspection will monitor quality of installation and glazing.

B. Test installed storefront for water leakage in accordance with AAMA 501.2.

3.5 ADJUSTING

A. Adjust operating hardware and sash for smooth operation.

3.6 CLEANING

A. Remove protective material from pre-finished aluminum surfaces.

B. Wash down surfaces with a solution of mild detergent in warm water, applied with soft, clean wiping cloths. Take care to remove dirt from corners. Wipe surfaces clean.

C. Remove excess sealant by method acceptable to sealant manufacturer.

END OF SECTION

ALUMINUM WINDOWS

SECTION 08 51 13

1. GENERAL CONDITIONS AND SPECIAL CONDITIONS:

The General Conditions and Special Conditions are a part of this Section and the Contract for this work. They apply to this Section as fully as if repeated here.

1.1 DESCRIPTION:

A. This Section sets forth general requirements applicable to all aluminum window work and materials required throughout the project regardless of which trade is responsible for installation, including, but not limited.

1. Extruded aluminum windows with fixed sash.
2. Factory glazing

B. Related sections include:

1. Section 07 92 00 Sealants and Caulking: Perimeter Sealant and back-up materials.
2. Section 08 81 00 Glazing:

1.2 REFERENCED STANDARDS:

A. AAMA 611 - Voluntary Specification for Anodized Architectural Aluminum; American Architectural Manufacturers Association; 1998.

B. AAMA 1503 - Voluntary Test Method for Thermal Transmittance and Condensation Resistance of Windows, Doors and Glazed Wall Sections; American Architectural Manufacturers Association; 2009.

C. AAMA 2603 - Voluntary Specification, Performance Requirements and Test Procedures for Pigmented Organic Coatings on Aluminum Extrusions and Panels; 2002.

D. AAMA CW-10 - Care and Handling of Architectural Aluminum From Shop to Site; American Architectural Manufacturers Association; 2004.

E. ASCE 7 - Minimum Design Loads for Buildings and Other Structures; American Society of Civil Engineers; 2010.

F. ASTM A 123/A 123M - Standard Specification for Zinc (Hot-Dip Galvanized) Coatings on Iron and Steel Products; 2009.

G. ASTM B 221 - Standard Specification for Aluminum and Aluminum-Alloy Extruded Bars, Rods, Wire, Profiles, and Tubes; 2008.

H. ASTM E 283 - Standard Test Method for Determining the Rate of Air Leakage Through Exterior Windows, Curtain Walls, and Doors Under Specified Pressure Differences Across the Specimen; 2004.

I. ASTM E 330 - Standard Test Method for Structural Performance of Exterior Windows, Doors, Skylights and Curtain Walls by Uniform Static Air Pressure Difference; 2002 (Reapproved 2010).

J. ASTM E 331 - Standard Test Method for Water Penetration of Exterior Windows, Skylights, Doors, and Curtain Walls by Uniform Static Air Pressure Difference; 2000 (Reapproved 2009).

K. SSPC-Paint 20 - Zinc-Rich Primers (Type I, "Inorganic," and Type II, "Organic"); Society for Protective Coatings; 2002 (Ed. 2004).

1.3 ADMINISTRATIVE REQUIREMENTS

A. Preinstallation Meeting: Convene one week before starting work of this section.

1.4 SUBMITTALS

A. See Section 01 33 00 - Administrative Requirements, for submittal procedures.

B. Product Data: Provide component dimensions and internal drainage details.

C. Shop Drawings: Indicate opening dimensions, elevations of different types, framed opening tolerances, method for achieving air and vapor barrier seal to adjacent construction, anchorage locations and installation requirements.

D. Samples: Submit two samples, 12 x 12 inch in size illustrating typical corner construction, accessories, and finishes.

E. Manufacturer's Installation Instructions: Include complete preparation, installation, and cleaning requirements.

1.5 QUALITY ASSURANCE

A. Manufacturer and Installer Qualifications: Company specializing in fabrication of commercial aluminum windows of types required, with not fewer than three years of experience.

1.6 DELIVERY, STORAGE, AND HANDLING

A. Comply with requirements of AAMA CW-10.

B. Protect finished surfaces with wrapping paper or strippable coating during installation. Do not use adhesive papers or sprayed coatings that bond to substrate when exposed to sunlight or weather.

1.7 FIELD CONDITIONS

A. Do not install sealants when ambient temperature is less than 40 degrees F.

B. Maintain this minimum temperature during and 24 hours after installation of sealants.

1.8 WARRANTY

A. See Section 01 78 00 - Closeout Submittals, for additional warranty requirements.

B. Provide five year manufacturer warranty against excessive degradation of exterior finish. Include provision for replacement of units with excessive fading, chalking, or flaking.

2. PRODUCTS

2.1 MANUFACTURERS

A. Basis of Design: See below under description of products.

B. Aluminum Windows:

1. Fleetwood Windows & Doors: www.fleetwoodusa.com.
2. Peerless Products, Inc; www.peerlessproducts.com.
3. Substitutions: See Section 01 6000 - Product Requirements.

2.2 WINDOWS

A. Windows: Tubular aluminum sections, factory fabricated, factory finished, thermally broken, vision glass, related flashings, anchorage and attachment devices.

1. Frame Depth: 4".
2. Air Infiltration: Limit air infiltration through assembly to 0.06 cu ft/min/sq ft of wall area, measured at a specified differential pressure across assembly in accordance with ASTM E 283.
3. Thermal Movement: Resists thermal movement caused by 180 degrees F surface temperature without buckling stress on glass, joint seal failure, damaging loads on structural elements, damaging loads on fasteners, reduction in performance or other detrimental effects.
4. Overall U-value, Including Glazing: 0.45, maximum.

B. Performance Requirements:

1. Grade: AAMA/WDMA/CSA 101/I.S.2/A440 AW100.
2. Movement: Accommodate movement between window and perimeter framing and deflection of lintel, without damage to components or deterioration of seals.
3. Air Infiltration Test Pressure Differential: 6.24 pounds per square inch.
4. Condensation Resistance Factor: Measured in accordance with AAMA 1503.
5. Water Leakage: None, when measured in accordance with ASTM E 331 and E 547.
6. System Internal Drainage: Drain to the exterior by means of a weep drainage network any water entering joints, condensation occurring in glazing channel, or migrating moisture occurring within system.

C. Fixed, Non-Operable Type:

1. Construction: Thermally broken.
2. Glazing: Single; clear; transparent.
3. Exterior Finish: Class I natural anodized.
4. Interior Finish: Class I natural anodized.

2.3 COMPONENTS

A. Frames: 2 inch wide x 4 inch deep profile, of 0.04 inch thick section; thermally broken with interior portion of frame insulated from exterior portion; flush glass stops of snap-on type.

B. Sills: 4 inch thick, extruded aluminum; sloped for positive wash; fit under sash leg to 1/2 inch beyond wall face; one piece full width of opening jamb angles to terminate sill end.

2.4 MATERIALS

A. Extruded Aluminum: ASTM B 221 (ASTM B 221M), 6063 alloy, T6 temper.

B. Concealed Steel Items: Profiled to suit mullion sections; galvanized in accordance with ASTM A 123/A 123M.

2.5 FABRICATION

A. Fabricate components with smallest possible clearances and shim spacing around perimeter of assembly that will enable window installation and dynamic movement of perimeter seal.

B. Accurately fit and secure joints and corners. Make joints flush, hairline, and weatherproof.

C. Prepare components to receive anchor devices.

D. Arrange fasteners and attachments to ensure concealment from view.

E. Prepare components with internal reinforcement for operating hardware.

F. Provide internal drainage of glazing spaces to exterior through weep holes.

G. Factory glaze window units.

2.6 FINISHES

A. Class I Natural Finish or Anodized Plus Natural Anodized 2-step Finish:

1. Class I Natural Anodized Finish: AAMA 611 AA-M12C22A41 Clear anodic coating not less than 0.7 mils thick.

B. Touch-Up Primer for Galvanized Steel Surfaces: SSPC-Paint 20, zinc rich.

3. EXECUTION

3.1 EXAMINATION

A. Verify that wall openings and adjoining air and vapor seal materials are ready to receive aluminum windows.

3.2 INSTALLATION

A. Install windows in accordance with manufacturer's instructions.

B. Attach window frame and shims to perimeter opening to accommodate construction tolerances and other irregularities.

C. Align window plumb and level, free of warp or twist. Maintain dimensional tolerances and alignment with adjacent work.

D. Install sill and sill end angles.

E. Provide thermal isolation where components penetrate or disrupt building insulation. Pack fibrous insulation in shim spaces at perimeter of assembly to maintain continuity of thermal barrier.

F. Coordinate attachment and seal of perimeter air barrier and vapor retarder materials.

3.3 TOLERANCES

A. Maximum Variation from Level or Plumb: 1/16 inches every 3 ft non-cumulative or 1/8 inches per 10 ft, whichever is less.

3.4 FIELD QUALITY CONTROL

A. Test installed windows for compliance with performance requirements for water penetration, in accordance with ASTM E 1105 using uniform pressure and the same pressure difference as specified for laboratory testing.

1. If any window fails, test additional windows at Contractor's expense.

B. Replace windows that have failed field testing and retest until performance is satisfactory.

END OF SECTION

FINISH HARDWARE

SECTION 087100

1. GENERAL CONDITIONS AND SPECIAL CONDITIONS

The General Conditions and Special Conditions are a part of this Section and the Contract for this work. They apply to this Section as fully as if repeated here.

1.1 WORK INCLUDED

This section includes finish hardware throughout the project and as specified or indicated on drawings.

1.2 OTHER SECTIONS

Hollow Metalwork.

1.3 QUALITY ASSURANCE

Hardware submittal shall be prepared by qualified experienced hardware detailer belonging to a Nationally recognized trade association knowledgeable to make adjustments in the schedule to accommodate fire and building codes, sizes and weights of doors, clearances, trim, etc.

1.4 SUBMITTALS

A. Provide complete hardware group schedule in detail based on schedules herein and review of architectural drawings, schedules and details. Required: 2 sets for preliminary; 3 sets for final. If required, furnish conformed copies of schedule as needed for coordination and installation.

B. Furnish physical samples of items if requested, to demonstrate equivalency to specified items or finish proposed. Samples will be returned if requested, C.O.D.

1.5 MISCELLANEOUS PROVISIONS

A. Provide complete finish hardware as necessary to completely equip each door to achieve operation, fire protection and function intended.

B. U.L. Listed Hardware shall be furnished in proper quantities for locations requiring same.

C. Sizes shall be adequate for the services required. Review details which affect suitability of scheduled items.

D. Comply with Americans With Disabilities Act (ADA), Title 24, Handicapped Regulations. Review schedule for consistency with regulations.

E. Conformity with the above conditions shall take precedence regardless of designations in schedules; furnish items of consistent quality and function to that scheduled.

1.6 WARRANTY

The finish hardware shall carry a limited warranty against defects in workmanship and operation for a period of one (1) year from date of acceptance. No liability is to be assumed where damage or faulty operation is due to abuse, improper usage, improper installation or failure to exercise normal maintenance.

2. PRODUCTS

2.1 GENERAL

A. Template Hardware: Whenever possible, furnish template hardware regardless of designation in schedule. Furnish templates to trades performing related preparatory work in quantities and at times required.

B. Fastenings: Include all necessary fastenings in types required for material to be fastened and suitable for heavy use over a long life. Materials and finishes shall be compatible with related hardware.

C. Packaging: Separately package, label and identify each item and use and location. Include key numbers with locks; deliver items requiring shop or factory installation at times and to places required.

D. Finishes: Natural or plated, as specified. Stainless steel shall be polished without lacquer, unless otherwise noted. Standard finish for plated hardware shall be satin stainless steel unless otherwise noted.

E. Keying:

1. Each building shall be grand-mastered and sub-mastered as necessary. All keyways shall be unique to the facility.

2. The Owner shall be provided with six (6) grandmaster keys, six (6) master keys for each MK set, three (3) keys per lock, and two (2) key blanks for each keyed lock. All keys shall be stamped “DO NOT DUPLICATE". Each cut key and the face of each cylinder plug shall be stamped with three (3) digits.

3. All permanent keys, along with two complete approved hardware schedules and a key bitting list, shall be delivered to Operations and Maintenance thirty (30) days prior to Certificate of Substantial Completion.

4. Construction keying shall be furnished with split key system and twenty (20) construction master keys. Two extractor keys shall be delivered directly to the Owner along with permanent keys. Construction keys and inserts shall be retained for future lock-out purposes and turned over to Owner.

2.2 HARDWARE ITEMS

A. Keys and Locks:

1. Locks and locksets shall be Schlage or Stanley Mechanical Solutions.

2. Locksets shall have steel cylindrical cases, with interior parts or steel and zinc-dichromate plating to resist rusting and corrosion. Six-pin cylinders shall be provided. Access to cylinder shall be provided without removing lockset from door for key-in-knob types. Cylinder shall have fully round plugs (without flattened areas), made of extruded brass bar material.

B. Door Closers:

1. Door closers shall be Norton or Dorma.

2. Where overhead closers are specified, they shall be sufficiently sturdy to effectively close the door against normal outward building or room air pressure.

3. On all doors to be used by the public, closers shall be capable of being adjusted to 8.5 pounds on exterior doors, five (5#) pounds on interior doors, and thirteen pounds (13#) on fire doors, and shall be so adjusted when installed.

C. Floor Checks: Floor checks shall be Stanley Mechanical Solutions. Where floor checks are specified, they shall be designed so as to permit adjustment without removal of the door, and must be sufficiently sturdy to effectively close the door against normal outward building or room air pressure.

D. Panic Devices: Panic devices shall be Stanley Mechanical Solutions. Where panic devices are required for emergency exits, they shall be UL approved and mechanically designed so as to prevent surreptitious entry along the door edge. The locking device shall be equipped with an auxiliary bolt against end pressure or knife shoving when the door is in a closed position. Devices to be used on fire exit doors shall not be equipped with a dogging feature.

E. Butts: Stanley Mechanical Solutions steel prime coat. Comply with requirements for fire ratings. Hinge pins: Stainless Steel.

1. Types: Doors without closers Stanley Mechanical Solutions FBB 179 N.R.P. for outswing.

2. Special types or features when scheduled.

3. Sizes as scheduled are minimum; increase sizes if required to clear trim or suit details.

F. Door Stops: Furnish for every condition where door may swing against finishes whether scheduled or not. Use Stanley Mechanical Solutions dome floor type.

3. EXECUTION

3.1 INSTALLATION

Mount hardware units at heights indicated in "Recommended Locations for Builders Hardware" for (Standard Steel Doors and Frames), (Custom Steel Doors and Frames) by the Door and Hardware Institute (DHI), except if otherwise specifically indicated or to comply with requirements of governing regulation, requirements for the handicapped, or if otherwise directed by the Architect.

3.2 Schedules herein are intended to include all items required to equip completely each location. Examine all related documents to insure that complete sets and functions are furnished for all situations. See drawings for group locations. See also Paragraphs 1.5, 2.2 and door details on drawings for possible inclusions not otherwise scheduled.

3.3 See drawings for hardware schedules

END OF SECTION

GLAZING

SECTION 08 81 00

1. GENERAL CONDITIONS AND SPECIAL CONDITIONS:

The General Conditions and Special Conditions are a part of this Section and the Contract for this work. They apply to this Section as fully as if repeated here.

1.1 DESCRIPTION:

A. This Section sets forth general requirements applicable to all glazing work and materials required throughout the project regardless of which trade is responsible for installation, including, but not limited.

1. Glass, glazing and glazing accessories, complete.

B. Related sections include:

1. Section 08 43 13 Aluminum Framed Entrances and Storefronts:
2. Section 08 51 13 Aluminum Windows:

1.2 QUALITY ASSURANCE:

A. Quality Standards: In addition to Code, glass installations shall comply with ANSI Z97.1, as applicable, and Federal Safety Standard 16 CFR 1201.

B. Glass Manufacturers' Usage Recommendations: Furnish each manufacturer's written analysis of glass usage for the exterior glass installations regarding adverse shading conditions and other problems that may occur as a result of the building geometry and glass exposures, with recommended solutions. If no such problems are anticipated by a glass manufacturer, the pertinent written analysis shall so state.

C. Safety Glazing: Provide safety glazing at all openings subject to human impact per CBC.

1.3 SUBMITTALS: Refer to Section 01 33 00 for procedures.

A. Samples and Product Data: Submit the following:

1. Samples of various glasses called for on the drawings, 9" square with smooth edges.
2. Each glass manufacturer's detailed recommendations and instructions for preparation of glazed openings and installation of glass. With the instructions, submit glass manufacturer's written recommendations for setting blocks and shims, jamb blocks and shims, wedge glazing gaskets, and fixed glazing gaskets to be used for installation of the manufacturer's glasses; include type and placement for each item.
3. Glazing channels or gaskets, 12" long.

4. Manufacturer's technical data for glazing gaskets, weathering gaskets, tapes, separators, setting and side blocks, and other glass setting material showing conformance with requirements specified, including warranties, coordinated with glass manufacturer's recommendations and instructions.
5. Samples of cured glazing sealants with technical Product Data.
6. Wall mirrors, 12" square with manufacturer's data for mirror, stainless steel J-moldings, primer and adhesive, and warranty.

B. Full-Size Samples: Install full-size samples of glasses specified below, installed in the frames forming a part of the Work. Locations shall be designated by the Architect. Glass showing defects, including excessive distortion, which detract from artistic effect, appearance, and design concept of the building, in the Architect's opinion, shall be removed and acceptable glass installed at no extra cost to the Owner. Approved sample installations establish the standard of quality required for glass installations of the same kinds and types. Full-size samples are required for:

1. Each type of tempered glass.
2. Insulating glass units.

C. Certificates: Submit from manufacturer stating the quality, thickness, and type of all unlabeled glass delivered to the site for field cutting.

1.4 JOB CONDITIONS: Protect glazing until completion and final acceptance of the Work. Repair or replace damaged or defective glazing to original specified condition, at no extra cost to the Owner. Damaged or defective glazing includes glass that cannot be properly cleaned.

1.5 WARRANTY: Warranty exterior glass installations against loosening, air or water leakage, glass pop-outs, deterioration, and all other defects for 5 years from the date of final acceptance by the owner.

A. Glazing Channels and Gaskets: Warranty for 5 years against all defective material or deterioration including, without limitation, shrinkage causing loss of seal and physical failure due to exposure to sun, ozone, elements, smog and other air pollution, and commercial glass cleaners.

B. Insulating Glass Units: Warranty against loss of hermetic seal or other defect for 10 years from date of final acceptance by the owner of the facility.

C. Unframed Wall Mirrors: Warranty against silver spoilage for 10 years from the date of final acceptance.

2. PRODUCTS

2.1 GLASS MATERIALS:

Glass of domestic manufacture, conforming to ASTM C1036 and ASTM C1048, except total distortion tolerances of ASTM C1048 do not govern over requirements in this Section, and to ANSI Z97.1, by Viracon, PPG Industries, Inc., Libby-Owens-Ford or approved equal. Label all factory cut panes and do not remove labels until directed. Do not cut unlabeled glass delivered to site as material for field cutting until glass is approved by Architect.

A. Plate Glass: Clear Type I, Class 1, quality q3 float, 1/2" thick unless otherwise indicated or specified, heat strengthened unless tempered glass is indicated or required.

B. Heat Strengthened and Tempered Glass: Heat strengthen or temper the above glasses as shown, required by Code, or required to meet wind load or performance requirements. Handle and size glass according to manufacturer's instructions. On each sheet of tempered vision glass, provide an inconspicuous visible label fused to glass and placed in lower corner, identifying tempered glass. Provide fireman's tempered glass label where shown or required by local Fire Department. Furnish clear, tinted plate glass, or reflective glass as indicated, specified, or required.

1. Process: Perform heat strengthening and tempering by the horizontal roller gas hearth process only. Process that produce tong or gripper marks are not acceptable.
2. Glass Heat Soak Tests: Subject all tempered glass to a heat soak test in the manufacturer's plant. Glass surface temperature and duration of the test shall be sufficient to produce the highest probability of breakage for lights containing inclusions, but not less than 554 deg F for 6 hours. Submit written record of heat soak test to Architect. Record shall indicate test conditions, date of test, number and size of lights tested per load, spacing of lights in oven, time glass was in the heat soak furnace, and test results (i.e. number of lights which broke). Heat soak tests are subject to inspection by Architect.

C. Heat Reflecting Coating: Where scheduled, provide above glasses with a Low 'E' coating with following characteristics:

1. Visible Light Transmittance: 0.53
2. Visible Light Reflectance (Exterior): 30%
3. Relative Heat Gain: 81 Btu/(hr x sq. ft.).

D. Insulating Glass Units: Provide all insulating glass units certified to Class CBA by ASTM E773 test method and to ASTM E774 specification requirements through the IGCC. Units shall have the IGCC label and A Classification etched in the corner of the unit. Furnish manufacturer's IGCC Class CBA certification.

1. Type: As selected or scheduled, nominal 1/4" thick, with Low E coating and nominal 1/2" dessicated air space at windows and doors, sloped or flat glazing bead as shown or selected but consistent for all insulating units and doors.

2. Panes: Fully temper one or both panes where shown, required by Code, or required by Quality Standards under "Quality Assurance". Provide glass as shown including Low E coating.

a. Where translucent glazing is called for, apply simulated acid-etch frit (Viracon V-1085 shall be the basis of design) to the number two pane.

3. Altitude Adjustment: Include altitude adjustment provisions of type standard with unit manufacturer and that preserves the integrity of dessicated air space as required for transportation to the site.
4. Precaution: Verify that polymer glazing sealants are chemically and physically compatible with insulating glass unit separators and sealants and are approved by the insulating glass unit manufacturer.

E. Wall Mirrors: Mirror quality float glass, 1/4" thick, edges finished and polished, double silvered with electro-deposited copper coating plus an organic protective coating. Provide stainless steel angle frame as shown on the drawings.

F. Intent: Tempered glasses are an important part of the artistic effect of the building design, and shall conform to the standard of quality established by the approved full-size Sample installations.

2.2 GLASS SETTING MATERIALS:

A. Glazing Channels and Gaskets: Extruded neoprene conforming to AAMA SG-1, meeting 5 year warranty requirements, approved colors, sponge units of 40 +/- 5 Durometer Shore A, designed for 20% to 35% compression; dense units of 70 +/- 5 Durometer Shore A for hollow profiles and 60 +/- 5 for solid profiles. Vulcanize gasket corners, both sponge and dense. Provide units designed to produce glass edge pressure of 4 pounds minimum and 10 pounds maximum per linear inch.

B. Blocks and Spacers: Setting blocks of solid neoprene or silicone rubber having 85 +/- 5 Durometer Shore A, block length equal to 0.1" per square foot of glass area but minimum 4" length with length increased as required to eliminate point loading, width not less than width of glazing pocket less 1/8", profiled and secured not to slip during installation and not to obstruct proper drainage of glazing cavity. Provide shims of same material, hardness, width, and length as setting blocks. Provide neoprene or silicone rubber side blocks of 55 +/- 5 Durometer Shore A.

C. Glazing Sealants: For use at glazing perimeters, acceptable sealants are GE Silglaze 2400, GE Silpruf, GE 1200 Silicone, and Dow Corning 795 or 995. For other joints select appropriate sealant for joint size, movement, and substrate; acceptable sealants include GE 1200 Silicone or Silpruf, or Dow Corning 795 and 995, or, where approved, 790. Polybutylene, oleoresinous, asphalt, and oil base sealants are not allowed for any use. Provide sealants of approved colors.

D. Mirror Setting Materials: Palmer Products Corp. "Mirro-Mastic" adhesive, "Mirro-Mastic Bond" primer, and "Mirro-Bac" backing paint.

3. EXECUTION

3.1 GLAZING:

Employ skilled and experienced glaziers. Set glass airtight and true with glazing channels or gaskets according to the "Glazing Manual" of Flat Glass Marketing Association, glass manufacturer's instructions, and as required herein to obtain weatherproof and waterproof installations. Conform glass edge clearances, and face and edge laps (bite), to Code and requirements herein. Set glass in rabbets with glazing blocks and spacers so glass does not contact frame and to preclude looseness and rattling. Use glass with straight smooth-

finished edges free of cracks, chips, swiping, seaming, stress foci, or any other defects on surfaces or edges for all glass installations.

A. Setting Blocks: Unless otherwise recommended by glass manufacturer or in the FGMA "Glazing Manual" for type of glass installation, provide setting blocks of the correct size located at the bottom quarter points of each glass pane, and side blocks in both jambs in upper half of panes retained by metal caps.

B. Glazing Gaskets and Channels: Compress at least 15% by stops and at least 5% lengthwise to prevent corner pullout, but do not exceed allowable compressive forces on glass.

C. Glazing Sealant: Ensure sealant installations form a continuous airtight and watertight seal for entire perimeter of each glass pane. For glass secured by metal frames or stops on two or more edges, hold glazing gaskets or channels back at least 1/8" from the sight lines and fill the voids with glazing sealant finished flush with stops, sealant installed on interior side of glass.

D. Exposed Glass Edges or Butt Glazing: Provide glass with the exposed edges ground straight, smooth, and slightly rounded where edges remain exposed or are butt glazed with sealant. Where sealant is indicated at interior installations, set joints close but not in contact and fill with glazing sealant of approved color, free of bubbles or voids and tool slightly concave. Immediately remove smears from glass.

E. Insulating Glass Units: Conform tolerances, edge clearances, frame laps, and setting of blocks and spacers to manufacturer's published requirements with spacing and sizes of blocks adequate to prevent improper point loadings. Place units with glazing gaskets or channels compressed at least 5% lengthwise during setting. Cut gasket legs down at least 1/8" below sight lines and fill the void with a clear silicone sealant having minimum 1/8" sealant-to-glass contact with sealant finished flush with stops. Do not block weep holes in supporting frame members.

F. Mirrors: Clean backings, apply primer, and allow to dry. Verify organic coating on the backs of mirrors is compatible with the adhesive; if not, apply the mirror adhesive manufacturer's recommended backing paint and allow to dry. Conform to the adhesive manufacturer's instructions and apply adhesive in spots that, when compressed, will cover not less than 60% of the mirror area. Allow 3/16" space between mirror back and substrate. If mirror is cut from a larger mirror sheet, apply backing paint on cut backing edge. Brace installed mirrors in place until adhesive is fully set.

3.2 COMPLETION:

Conform to Section 01 74 00. Do not use any harsh or abrasive cleaning agents, caustics, or acids for cleaning. Wash and polish vision glass both sides and leave glass free of soiling, streaks and labels. Wash and polish mirrors.

END OF SECTION

WALL LOUVERS

SECTION 089119

1. GENERAL

1.1 SUMMARY

A. Related Requirements: Comply with following:

1. Metal Finishes: Section 050513 Metal Finishes

B. Related Sections:

1. Division 23 – Ductwork attachment to louvers.

1.2 DEFINITIONS

A. Drainable Blade Louver: Louver assembly designed to collect and drain water to exterior at sill by means of gutters located in blades and channels in jambs and mullions; not capable of withstanding penetration by wind driven rain.

B. Minimum Weather Louver Effectiveness: Louver rating based on tests conducted in accordance with:

1. AMCA Standard 500-L.

1.3 SYSTEM DESCRIPTION

A. Design Requirements: Manufacturer is responsible for designing units, including anchorage to structural system and necessary modifications to meet specified requirements and maintain visual design concepts.

1. Drawings: Diagrammatic and intended to establish basic dimension of units, sight lines, and profiles of units.
2. Make modifications only to meet field conditions and to ensure proper fitting of Work.
3. Obtain Architect's approval of modifications.
4. Provide concealed fastening wherever possible.
5. Attachment Considerations: Account for site peculiarities and expansion and contraction movements so there is no possibility of loosening, weakening and fracturing connection between units and building structure or between components themselves.
6. Wind Loading, Typical: Design, engineer and install to withstand minimum positive and negative wind pressures specified.

B. Performance Requirements:

1. Water Penetration: Not more than 3 ml of water per square meter of free area at 0.01 ounce of water per square foot of free area at 770 FPM free air velocity when tested in accordance with AMCA 500.
2. Static Pressure Loss: Not more than 0.10 inch of water gage at 770 FPM free air velocity when tested in accordance with AMCA 500.
3. Air Volume: Nominal 6,130 CFM.

C. Interface with Adjacent Systems:

1. Integrate design and connections with adjacent construction.

.1.4 SUBMITTALS

A. General: Submit in accordance with General Conditions.

B. Product Date: Submit descriptive data for free area, and finishes.

1. Submit copy of test data and AMCA certification for each model of louver.

C. Shop Drawings:

1. Include details of fabrication and erection, anchorage and accessories.
2. Indicate material thickness.
3. Indicate elevations, dimensions and tolerances, blade configuration and screening.

D. Samples: Submit full range of color samples of actual finish on metal for Architect's selections; color photo representations are not acceptable.

E. Informational Submittals: Submit following packaged separately from other submittals:

1. Support reactions design data.
2. Certifications specified in Quality Assurance article.
3. Manufacturer's instructions.

1.4 QUALITY ASSURANCE

A. Certifications: Submit manufacturer's certification that products furnished for Project meet or exceed specified requirements.

2. PRODUCTS

2.1 MANUFACTURERS:

A. Acceptable Manufacturers:

1. The Airolite Company, Marietta, OH.
2. Construction Specialties, Inc., Cranford, NJ.
3. Ruskin, Grandview, MO.

2.2 MATERIALS:

A. Aluminum Sheet: ASTM B209, alloy and temper as recommended by manufacturer.

B. Aluminum Extrusions: ASTM B221, alloy and temper as recommended by manufacturer.

C. Bird Screen: 1/2 inch square mesh, 0.063 inch aluminum wire, 80 percent free area.

D. Anchors and Fasteners: Hot-dip galvanized, stainless steel, aluminum or other non-ferrous metal, compatible with materials to be fastened.

1. Types, gages, and lengths to suit installation conditions.

E. Bituminous Paint: Manufacturer's standard cold applied asphalt mastic.

2.3 METAL WALL LOUVER FABRICTION

A. Fabricate assemblies of extruded aluminum except where specifically noted otherwise:

1. Join frame members to one another and to stationary louver blades by welding, except where field bolted connections between frame members are made necessary by louver size. Dress exposed welds smooth and flush with adjacent surfaces.
2. Maintain equal blade spacing, including blade separation from frame at head and sill to produce uniform appearance.
3. Fabricate frames to suit adjacent construction with tolerances allowing for application of sealants in joints between louvers and adjoining work.
4. Include supports, anchorages and accessories required for complete assembly.
5. Provide separate sill extension pieces, full width of louver assembly to prevent water penetrating to interior. Fabricate of same metal as louvers, except aluminum sheet metal is acceptable at extruded louvers.
6. Provide bird screens for each louver. Fabricate frame of screen in manufacturer's standard extruded or folded design of same metal as louver.

2.4 STATIONARY METAL WALL LOUVERS

A. Drainable Blade Assemblies: Extruded aluminum.

1. Thickness: Not less than 0.081 inch for extruded aluminum.
2. Frame depth: 4 inches.
3. Blades: 45 degree, single drainable type spaced at 3-1/2 inch centers.
4. Provide structural supports, and blade braces designed and spaced to withstand wind loading.
5. Acceptable Product: K6774, The Airolite Company.

2.5 FINISH

A. Fluoropolymer (PVDF) Coating:

3. EXECUTION

3.1 EXAMINATION

A. Examine conditions and proceed with Work in accordance with General Conditions.

1. Verify that prepared openings are ready to receive assemblies and openings are of required dimensions.

3.2 INSTALLATION

A. Metal Wall Louvers: Install in accordance with manufacturers recommendations and approved shop drawings.
1. Install level, plumb, square and in proper alignment with adjacent surfaces.

2. Align louver assembly to ensure moisture drains from flashings and blades to exterior.
3. Form tight joints with exposed connections accurately fitted together.
4. Secure with concealed fasteners wherever possible.
5. Apply coat of bituminous paint or zinc chromate primer on concealed aluminum surfaces in contact with cementitious or dissimilar materials.
6. Mount screens on inside face of louvers.

3.3 CLEANING

A. Repair exposed to view surfaces which have been damaged to match original condition.

1. Clean surfaces and components to remove foreign substances.

END OF SECTION

NON-LOAD BEARING WALL FRAMING

SECTION 092216

1. GENERAL

1.1 GENERAL CONDITIONS AND SPECIAL CONDITIONS

The General Conditions and Special Conditions are a part of this Section and the Contract for this work. They apply to this Section as fully as if repeated here.

1.2 DESCRIPTION

A. This Section includes light-gauge non-load bearing wall framing systems, including metal studs, wall furring, and backing plates.

B. Related Sections:

1. Gypsum board is specified in Section 092900.

1.3 SUBMITTALS

A. Product Data: Manufacturer's specifications and installation instructions for each type of metal support system, including provisions for fixture and equipment anchorage.

B. Shop Drawings: Show provision for fixture and equipment anchorage to stud systems different from typical systems or details indicated.

1.4 QUALITY ASSURANCE

A. Tolerances: Provide metal studs and furring installations that are plumb, true, straight, and rigid.

B. Welder's Qualifications: AWS D1 .1 and 1.3 as applicable.

2. PRODUCTS

2.1 APPROVED MANUFACTURERS

A. American Studco, Inc., Angeles Metal Systems, California Metal Systems, Inc., Design Shapes in Steel, Knorr Steel Framing Systems, Scafco Corporation, United Construction Supply, Western Metal Lath & Steel Framing Systems or approved equal.

2.2 MATERIALS

A. Metal Studs:

1. Material: Mill-certified galvanized steel conforming to ASTM A653, G40 coating, minimum yield strength 33,000-psi.

2. Construction: Formed C-channel section conforming to ASTM C645.

3. Size and Thickness: As indicated.

B. Runner Tracks:

1. Material: Mill-certified galvanized steel conforming to ASTM A653, G40 coating, minimum yield strength 33,000-psi.

2. Construction: Formed channel section conforming to ATM C645.

3. Size: Minimum 1-inch flange width; web depth matching studs.

4. Thickness: Same as studs.

C. Top Deflection Track:

1. Approved Manufacturers:

a. Dietrich Industries, Inc. “Sliptrack System” with downstanding legs nominally 2-1/2 inches, with 1-1/2-inch slots at 1-inch on center.

b. The Steel Network, Inc. “VertiTrack” or “VertiClip System”, pre-assembled track with clips installed to match stud spacing. Clips with attached bushing and screws to allow stud movement.

2. System shall provide for minimum tested overall movement of 1-inch: 1,4-inch plus / 1,4-inch minus.

3. Track shall be provided in standard widths of 6- and 4-inches and in 16-, 18-, and 20-gauge sheet steel thickness, as indicated or required by Project conditions.

D. Metal Channels: Mill-certified galvanized steel conforming to ASTM C653, G40 coating, minimum yield strength 33,000-psi.

1. Framing, Furring, and Stiffening:

Size, Inches	Pounds per 1,000 Lineal Feet
3/4 cold rolled	300
1-1/2 cold rolled	475
2 cold rolled	590

2. Furring Channels: Minimum 26-gauge galvanized steel with knurled faces; hat-shaped or Z-section as required.

E. Tie Wire: No. 16-gauge, galvanized, single-strand annealed steel or No. 18-gauge, galvanized, double-strand annealed steel.

F. Screws: ASTM C1002, Type S, pan head sheet metal screws, minimum 1/2-inch length.

G. Runner Track Fasteners: Tempered-steel pins with corrosive resistant plating or coating, 9/64-inch diameter, minimum 1-1/8-inch penetration, IBC allowable shear value of 225-pounds.

H. Backing Plates: As indicated.

I. Compression or Isolation Strips: Fiberglass, 1/2-inch nominal thickness, width equal to width of tracks or studs where used; density such that material will compress to one-half or less of loose thickness.

3. EXECUTION

3.1 INSPECTION AND PREPARATION

A. Verify that conditions are satisfactory for the installation of metal support systems. Do not commence the installation until unsatisfactory conditions have been corrected.

B. Coordinate installation of metal support systems with the installers of other related work. Review areas of potential interference and conflicts, and coordinate layout and support provisions for interfacing work.

3.2 GENERAL INSTALLATION REQUIREMENTS

A. Install non-load-bearing steel framing members in accordance with ASTM C754, and as

specified.

B. Cutting:

1. General: Cut framing components squarely or on angle as required to fit tightly with proper bearing against abutting members.

2. Cutting Studs: If stud web is cut more than 50-percent, or stud flanges are cut, restore stud to original strength by wire-tying, or welding on steel reinforcement.

C. When studs extend to the underside of structural slabs, secure at top with a slip connection to accommodate slab deflection. Install in accordance with manufacturer's instructions.

3.3 NON-LOAD-BEARING VERTICAL METAL FRAMING

A. Runner Tracks: Align at floor and ceiling with partition layouts. Secure to structure with specified fasteners located 2-inches from each end and spaced not to exceed 24-inches on center.

1. Coordinate installation of continuous isolation strips or acoustical sealant at acoustical partitions with installation of top and bottom runner tracks.

2. Where partition comes to underside of profile metal deck, create an acoustic seal to fill the profile. Use either metal plate or fiberglass and acoustic sealant, as indicated.

B. Installation of Metal Studs:

1. Install studs spaced 16-inches on center unless otherwise indicated. Screw-fasten framing connections using a minimum of 2 screws for each connection.

2. At partition corners and intersections, provide a minimum of 3 studs.

3. Splice studs where required, by nesting with a minimum lap of 8-inches; fasten laps with 2 screws through each flange.

4. Unless otherwise indicated, frame door openings with double 16-gauge vertical studs securely attached to each jamb of door frame.

a. At head, install runner track; cut flanges at ends, bend web 90-degrees and screw attach to jamb studs.

b. Install jack studs over door opening, spaced same as full-height studs.

c. Where control joints extend upward from door jambs, install a jack stud spaced 1/2-inch from each jamb stud. Space next full-height stud not more than 6-inches from each jamb stud.

d. Attach jamb studs to metal door frames with metal clips, each with 2 screws into jamb stud.

e. Attach jamb studs to wood door frames with pairs of wood screws, spaced 24-inches on center.

5. Frame openings other than door openings in the same manner as for doors, and install framing below sills of openings to match framing required above door heads.

6. Frame both sides of expansion and control joints with a separate stud; do not bridge the joint with framing components.

7. Install continuous horizontal stiffeners in partitions where recommended by stud manufacturer for partition height, stud gauge, stud spacing, number of layers of gypsum board used, and anticipated stud deflection.

8. Stiffen openings with horizontal channels. Provide one channel continuous across

head of openings extending to third stud beyond on each side. Provide one channel at each frame anchor extending to third stud beyond. Wire-tie or weld horizontal channels to each stud.

C. Chase-Wall Framing:

1. Align two parallel rows of floor and ceiling runners according to partition layout.

2. Position steel studs vertically in runners with flanges in same direction, with studs on opposite sides of chase directly across from each other. Anchor to runners in accordance with manufacturer's instructions.

3. Cross brace chase studs with 12-inch gypsum wallboard gussets or minimum 2-1/2-inch steel studs. Attach web-to-web with screws. If chase wall studs are not opposite, brace with horizontal runners and braces.

3.4 BACKING PLATES

A. Install as indicated and specified for support of wall-hung cabinets, toilet partitions and accessories, and other items to be mounted on vertical surfaces.

B. Welding shall comply with AWS D1 .3.

C. Paint welds with a rust-inhibitive paint.

3.5 SOUND CONTROL WORK

A. Specified requirements apply to framing for interior partitions indicated as sound partitions.

B. Isolate top and bottom runners from direct contact with structure by installing over either:

1. Continuous isolation strips as specified, or

2. Two continuous 1/4-inch beads of acoustical sealant specified in Section 09820 applied at quarter points of track width.

C. Studs at terminal ends of partitions abutting intersecting walls or partitions, and studs that would otherwise contact intermediate structural columns shall be similarly installed over strips or sealant.

3.6 INSTALLATION TOLERANCES

A. Variation from Plumb: Maximum 1/8-inch in 10-feet.

B. Variation from Level: Maximum 1/8-inch in 10-feet.

C. Variation from True Plane: Maximum 1/8-inch in 10-feet.

D. Variation from True Position: Maximum 1/4-inch.

E. Variation of Member from Plane: Maximum 1/8-inch.

END OF SECTION

METAL LATH AND ACCESSORIES

SECTION 092236

1. GENERAL CONDITIONS AND SPECIAL CONDITIONS

The General Conditions and Special Conditions are a part of this Section and the Contract for this work. They apply to this Section as fully as if repeated here.

1.1 SCOPE

Work in this section consists of:

A. This Section describes the requirements for furnishing and installing metal lath and accessories.

B. Related Sections:

1. Portland cement plaster is specified in Section 092400.

1.2 QUALITY ASSURANCE

A. Perform work in accordance with the applicable requirements of California Building Code (CBC) Section 2506.

B. Industry Association Recommendations: Conform to recommendations of ANSI/MLSFA A42.3, except where those recommendations conflict with specified requirements.

1.3 PRODUCT DELIVERY, STORAGE, AND HANDLING

A. Deliver products and materials in original unopened packages, containers, or bundles with manufacturer's label intact and legible.

B. Remove items delivered in broken, damaged, rusted, or unlabeled condition from Project site immediately.

C. Protect metal lath and accessories from moisture and other sources of damage.

D. Store metallic materials and accessories indoors, off the floor.

2 PRODUCTS

2.1 LATH

A. Metal Lath: Steel, coated with rust-inhibitive paint after cutting, or cut from zinc-coated steel sheets.

1. Self-Furring Diamond Mesh: 3.4-pounds per square yard self-furring diamond mesh with evenly spaced indentations to hold lath approximately 1/4-inch away from solid surfaces. Use over gypsum sheathing.

2. 3/8-Inch Rib Lath: 3.4-pounds per square yard, fabricated in herringbone mesh pattern with 3/8-inch deep ribs. Use at suspended plaster ceilings and soffits.

2.2 FASTENERS

A. Screws:

1. General: ASTM C646, corrosion resistant, for attachment to metal framing

25-gauge and lighter; ASTM C954 for attachment to metal framing 20-gauge and heavier.

2. Thread and head designs and lengths as recommended by manufacturer for uses and materials involved.

2.3 METAL ACCESSORIES

A. General: Minimum 26-gauge galvanized steel or zinc alloy, perforated or expanded flanges as manufactured by USG, Western Metal Lath, Keene or approved equal.

1. Corner Beads: Small-nose type.

2. Casing Beads: No. 66 square edge.

3. Corner Reinforcement: Cornerite, minimum 1.75-pounds per square yard expanded metal lath with minimum 2-inch legs.

4. Strip Reinforcement: For reinforcing joints of dissimilar materials and diagonal reinforcement at opening corners, minimum 1.75-pounds per square yard expanded metal lath.

5. Control Joints: Keene No. 40 unless special shapes are detailed.

6. Extruded Aluminum Accessories: Fry Reglet or approved equal, reveals, vents, and trim where indicated.

3 EXECUTION

3.1 INSTALLATION OF METAL LATH

A. Exterior Surfaces: Comply with CBC Section 2506, ANSI/MLSFA A42.3 and as specified.

1. General: Install metal lath over gypsum sheathing and building paper as indicated.

2. Attach with powder driven wide-shouldered forced entry fasteners spaced 6-inches apart.

3. Lap sides not less than 1/2-inch and ends not less than 1-inch.

4. Metal lath shall be continuous in corners.

5. Insert lath as far as possible into reentrant space of metal frames, and notch to pass around jamb anchors.

6. Where no external corner reinforcement is used, lath shall be furred out and carried around corners at least one support on frame construction.

3.2 INSTALLATION OF METAL ACCESSORIES

A. General:

1. Fasten in place as required to prevent dislodging or misalignment by subsequent operations.

2. Fasten at both ends and at a maximum of 12-inches on center along sides.

3. Bring grounding edge of accessories to true lines, plumb, level, and straight.

4. Install accessories to provide required depth of plaster and to bring

plaster surface to required plane.

5. Connect lengths of accessories as recommended by the manufacturer to assure a continuous line.

6. Install continuous corner reinforcement for full length of external corners.

7. Install casing beads to provide a minimum 1/8-inch clearance between structural units and termination points of surfaces to receive plaster finish.

B. Beads:

1. Use single length of metal beads wherever length of run does not exceed longest standard stock length available; miter or cope corners.

2. Set beads level, plumb, and true to line. Shim as required and align joints with concealed splices or tie plates.

3. Provide casing beads at the following locations:

a. Where plaster abuts dissimilar construction.

b. At perimeter of openings where edges of plaster will not be concealed by other work.

END OF SECTION

PORTLAND CEMENT PLASTER

SECTION 092400

1. GENERAL CONDITIONS AND SPECIAL CONDITIONS

The General Conditions and Special Conditions are a part of this Section and the Contract for this work. They apply to this Section as fully as if repeated here.

1.1 SCOPE

Work in this section consists of:

A. This Section includes the following type(s) of portland-cement plaster:

1. Two-coat application with synthetic finish coat over metal lath.

2. Base coat application at stone as indicated on plans.

B. Related Sections:

1. Metal lath and accessories are specified in Section 092236.

2. Field-applied synthetic finish coat is specified in Section 092513.

1.2 SUBMITTALS

A. Product Data: Manufacturer's written recommendations, proportion mixes, and installation instructions for each product, including data showing compliance with specified requirements.

B. Mock-Up: Prior to plastering work, fabricate panels for each type of finish and application required to demonstrate aesthetic effects of application and qualities of materials and application.

1. Locate mock-ups on site where directed by the Architect.

2. Erect a 4-foot x 4-foot mock-up using materials and methods to be incorporated in the work.

3. Demonstrate range of aesthetic effects, including color, texture, and workmanship to be expected in the completed work. Provide synthetic finish coat as specified in Section 092513.

4. Retain and maintain mock-ups during construction in undisturbed condition as a standard for judging completed plaster work.

1.3 QUALITY ASSURANCE

A. Code Requirements: Comply with applicable requirements of CBC Section 2508.

B. Allowable Tolerances of Finished Surface: Maximum deviation from true plane shall not exceed 1/4-inch as measured from the line of a 5-foot straightedge placed at any location on the surface.

1.4 PRODUCT DELIVERY, STORAGE, AND HANDLING

A. Deliver manufactured materials in original unopened packages or containers with manufacturer's label intact and legible.

B. Keep cement and lime dry, stored off the ground, under cover, and away from damp surfaces.

C. Remove wet and deteriorated materials from Project site.

D. Protect metallic materials and accessories from moisture and other sources of damage.

1.5 JOB CONDITIONS

A. Environmental Requirements:

1. Provide sufficient heat and ventilation at enclosed areas where plastering is being performed to allow cement plaster to properly cure.

2. Take precautionary measures necessary to ensure that excessive temperature changes do not occur.

3. Cold Weather Requirements: Do not apply cement plaster unless minimum ambient temperature of 50-degrees F. has been and continues to be maintained for a minimum of 48-hours prior to application and until plaster is cured.

4. Hot Weather Requirements: Protect cement plaster from uneven and excessive evaporation during hot, dry weather.

B. Protection:

1. Cover building openings in areas adjacent to plastering work with plastic film.

2. Protect finished surfaces installed prior to plastering by covering with a suitable nonstaining material. Cover metal frames with plastic film.

3. Maintain protection in place until completion of plastering work.

2 PRODUCTS

2.1 BASE COAT MATERIALS

A. Portland Cement: ASTM C150, Type I or Type II.

B. Hydrated Lime: ASTM C206, Type S, certified not less than 99-percent hydrated.

C. Aggregates: ASTM C897.

1. Gradation, Base (Scratch and Brown) Coats:

U.S. Standard Sieve	Percent Retained by Weight (+2%) Minimum	Maximum
No. 8 (2.36 mm)	0	10
No. 16 (1.18mm)	10	40
No. 30 (600 um)	30	65
No. 50 (300 um)	70	90
No. 100 (150 um)	95	100

D. Fiber Reinforcing: 1/2-inch alkaline-resistant chopped-glass fibers or alkaline-resistant polypropylene fibers. Detergent admixtures or clay to aid in pumping plaster will not be permitted.

E. Water: Clean, potable, and free from substances harmful to plaster.

2.2 FINISH COAT MATERIALS

A. Synthetic plaster finish as specified in Section 092513.

2.3 CEMENT PLASTER

A. Mixing:

1. General:

a. Accurately proportion materials for each plaster batch with measuring devices of known volume.

b. Size batches for complete use within maximum of one-hour after mixing.

c. Re-temper plaster stiffened from evaporation, but do not use or re-temper partially hydrated cement plaster.

d. Do not use caked or lumping materials.

e. Mix factory-prepared plaster in accordance with the manufacturer's written instructions.

f. Use moist, loose sand in mix proportions.

g. Withhold 10-percent of mixing water until mixing is almost complete, then add as needed to produce necessary consistency.

2. Mechanical Mixing:

a. Clean mixer of set or hardened materials before loading for new batch.

b. Maintain mixer in continuous operation while adding materials.

c. Conform to mixing sequence and time recommended by manufacturer of plaster materials. Add fibers by sprinkling in mix during last 2-minutes of mixing cycle.

3. Hand Mixing: Do not hand-mix unless authorized by Architect.

B. Mix Proportions by Volume: As specified in CBC Table 25-F for plaster thickness indicated.

3 EXECUTION

3.1 INSPECTION

A. Verify that surfaces to be plastered are free of dust, loose particles, oil, and other foreign matter which would affect bond of plaster coats.

B. Examine construction, grounds, and accessories to ensure that finished plaster surfaces will be true to line, level, and plumb, without requiring additional thickness of plaster.

C. Do not commence installation until unsatisfactory conditions have been corrected.

3.2 PREPARATION

A. Prepare exterior concrete masonry walls to receive plaster by cleaning with water to remove salt spray and dirt.

B. Apply bonding agent in accordance with manufacturer's instructions.

3.3 APPLICATION

A. Number of Coats: Provide two-coat application with synthetic finish over metal lath in accordance with ASTM C926.

B. Two-Coat Application:

1. Apply plaster by hand or machine spray. If machine applied, use only experienced machine applicator foreman and nozzleman. Slump for machine applied plaster shall be between 2-1/2- to 4-inches at mixer and 2- to 3-1/2-inches at nozzle.

2. Interrupt plaster coats only at junctions of plaster planes, at openings, or at control joints.

3. Apply scratch coat with sufficient material and pressure to form full keys through and to embed metal base. When firm, score in one direction.

4. Apply brown coat to scratch coat, bringing out to grounds, flat to true surface, and free of imperfections that would reflect in finish coat.

5. Reconsolidate brown coat by floating, and roughen to assure bond with finish coat.

6. Apply finish coat as specified in Section 092513.

7. Nominal Plaster Thickness Measured from Face of Lath, in accordance with ASTM
C929, Table 4:

a. Vertical Surfaces:

1) Scratch Coat: 1/2-inch, minimum.

2) Brown Coat: 3/8-inch.

3) Finish Coat: As specified in Section 09890.

b. Horizontal Surfaces:

1) Scratch Coat: 1/4-inch.

2) Brown Coat: 1/4-inch.

3) Finish Coat: As specified in Section 09890.

C. Curing:

1. Maintain moist conditions by fine fog spraying.

2. Cure scratch coat for a minimum of 48-hours, and maintain a minimum of 48-hours between application of scratch coat and brown coat.

3. Cure brown coat for a minimum of 48-hours, and maintain a minimum of 14-days between the application of the brown coat and finish coat.

3.4 COMPLETION

A. Patching:

1. Upon completion of application, point up plaster around trim and other locations where plaster meets dissimilar materials.

2. Cut out and patch defective or damaged plaster.

3. Match patching of defective or damaged plaster to existing work in form, texture, and color.

B. Cleaning:

1. Remove plaster and protective materials from control and expansion joints, perimeter beads, and adjacent surfaces.

2. Remove stains that would adversely affect subsequent finishes on plaster.

C. When complete, plaster surfaces shall be flat or uniformly curved, true to plane; and free from scaffold and tool marks, stains, or other damage or defects and shall be uniform in texture and color.

END OF SECTION

SYNTHETIC PLASTER FINISH COAT

SECTION 092513

1. GENERAL CONDITIONS AND SPECIAL CONDITIONS

The General Conditions and Special Conditions are a part of this Section and the Contract for this work. They apply to this Section as fully as if repeated here.

1.1 SCOPE

Work in this section consists of:

A. This Section includes exterior synthetic plaster finish coat over portland-cement plaster.

B. Related Sections:

1. Portland-cement plaster is specified in Section 092400.

1.2 SUBMITTALS

A. Sample for Initial Selection: Manufacturer's standard color charts and small scale samples indicating color and textures available.

B. Samples for Verification Purposes: 24-inch x 24-inch square samples for each finish, color, and texture; prepare using same tools and technique to be used for installation.

1.3 QUALITY ASSURANCE

A. Applicator: Approved by the manufacturer of the synthetic plaster finish coat material.

1.4 PRODUCT DELIVERY, STORAGE, AND HANDLING

A. Deliver products in original unopened packaging with legible identification.

B. Store products in a cool, dry place out of direct sunlight, protected from the elements and from damage. Store at a temperature between 40-deg. F. and 90-deg. F.

1.5 JOB CONDITIONS

A. Environmental Requirements:

1. Application shall be in ambient temperatures above 40-deg. F. and below 90-deg. F.

2. Maintain a minimum ambient temperature of 40-deg. F. for at least 24-hours after installation.

3. Schedule work to avoid application in direct sunlight.

B. Protection:

1. Protect surrounding areas and surfaces from damage during application of the synthetic plaster finish coat system.

2. Protect finished work from water penetration behind the system when stopping for the day or when completing an area.

2 PRODUCTS

2.1 SYNTHETIC PLASTER FINISH COAT SYSTEM

A. Approved Manufacturer: Omega “Acryflex” or approved equal. Color to be selected. Texture to match “Stolit 1.5” as by Sto.

B. Primer: As recommended by acrylic coating manufacturer.

3 EXECUTION

3.1 SURFACE PREPARATION

A. Cement plaster substrate shall be clean, dry, structurally sound and properly cured.

B. Surfaces shall be free of dirt, oil, grease, mildew, fungus, efflorescence, and other contaminants.

C. Remove surface contaminants by wire brushing, sandblasting, waterblasting, or other means approved by synthetic plaster finish coat manufacturer.

3.2 MIXING

A. Mix synthetic plaster finish coat with a clean, rust-free high speed mixer to a uniform consistency. A small amount of clean water may be added to aid workability. Comply with manufacturer's instructions.

B. Do not apply separate batches side-by-side.

3.3 APPLICATION

A. Apply primer with roller, brush, or suitable spray equipment to properly prepared cement plaster in accordance with manufacturer's instructions. Tint primer to final color.

B. Synthetic Plaster Finish Coat:

1. Apply finish in continuous application, working to a wet edge to eliminate cold joints.

2. Trowel apply finish to the primed substrate using a stainless steel trowel to a thickness slightly thicker than the largest aggregate size.

3. Scrape the material down to a uniform thickness no greater than the largest aggregate size.

4. Achieve final texture by floating in a figure eight motion with appropriate trowel.

C. Protect completed finish coat from exposure to rain and freezing until completely dry.

3.4 TOUCH-UP

A. Touch-up areas where synthetic plaster finish coat has been damaged. Touch-up shall not be obvious.

3.5 COMPLETION

A. Exposed surfaces shall be clean and free from scratches, dents, tool marks, stains, discoloration and other defects and damage.

3.6 CLEANUP

A. Remove extra materials from jobsite.

B. Clean adjacent materials and surfaces and the work area of foreign materials resulting from the work.

END OF SECTION

GYPSUM BOARD

SECTION 092900

1. GENERAL

1.1 GENERAL CONDITIONS AND SPECIAL CONDITIONS

The General Conditions and Special Conditions are a part of this Section and the Contract for this work. They apply to this Section as fully as if repeated here.

1.2 DESCRIPTION

A. This Section includes gypsum board, joint treatment, trim, and accessories.

B. Related Sections:

1. Non-load bearing wall framing is specified in Section 092216.

2. Painting is specified in Section 099100.

1.3 SUBMITTALS

A. Product Data: Manufacturer's specifications and installation instructions for each type of gypsum board and accessory required.

B. Samples: Furnish four 12-inch x 12-inch minimum samples of Level 5 smooth finish.

C. Mock-up: Provide minimum 100-square foot mock-up of Level 5 smooth finish, including vertical and horizontal surfaces, at location approved by Architect. Approved mock-up may become part of the work.

1.4 QUALITY ASSURANCE

A. Manufacturer: Gypsum board, including accessories and fasteners, shall be the products of the same manufacturer.

B. Gypsum board work shall comply with ASTM C1 396, and CBC Chapter 25 unless otherwise indicated or specified.

C. Installation and finishing of gypsum board shall comply with GA-216.

D. Fire-Resistance Ratings: Where gypsum board systems with fire-resistance ratings are indicated, provide materials and installations identical with those of applicable assemblies tested in accordance with ASTM E1 19 by fire testing laboratories acceptable to authorities having jurisdiction.

1. Provide fire-resistance-rated assemblies identical to those indicated by reference to GA File No's. in GA-600 "Fire Resistance Design Manual" or to design designations in UL "Fire Resistance Directory" or in listing of other testing and agencies acceptable to authorities having jurisdiction.

E. Allowable Tolerances:

1. Gypsum board surfaces shall have no measurable variation in any 2-foot direction and a maximum variation of 1/8-inch in 10-feet when a straightedge is laid on the surface in any direction. Specified tolerances apply to both plumbness of walls and levelness of ceilings.

2. Shim work, including existing framing members, as required to comply with specified tolerances.

3. Do not exceed 1/16-inch offset between planes of abutting sheets at edges or ends.

F. All materials shall comply with the requirements of Air Quality Management District (AQMD) Rule 1168 governing the emission of Volatile Organic Compounds (VOC's).

1.5 PRODUCT DELIVERY, STORAGE, AND HANDLING

A. Delivery:

1. Deliver materials to the Project site in original package containers or bundles with manufacturer's labels intact and legible.

2. Deliver fire-rated materials bearing the testing agency's label and classification identification.

B. Storage:

1. Store materials indoors in a dry area, under cover, and stacked flat off the floor.

2. Stack gypsum board so that long lengths are not over short lengths.

C. Handle gypsum board to avoid damaging face and edges of sheets.

D. Protect metal corner beads and trim from being bent or damaged.

1.6 PROJECT CONDITIONS

A. Establish and maintain environmental conditions for application and finishing gypsum board to comply with ASTM C840 and with gypsum board manufacturer's recommendations.

B. Minimum Room Temperatures: For non-adhesive attachment of gypsum board to framing, maintain not less than 40-deg. F. For adhesive attachment and finishing of gypsum board, maintain not less than 50-deg. F. for 48-hours prior to application and continuously thereafter until drying is complete.

C. Ventilate building spaces to remove water not required for drying joint treatment materials.
Avoid drafts during dry, hot weather to prevent materials from drying too rapidly.

D. Provide for continuous ventilation during installation, using as close to 100-percent outside air as possible.

2. PRODUCTS

2.1 APPROVED MANUFACTURERS

A. United States Gypsum , Georgia-Pacific Corp., Gold Bond Building Products, Div., National Gypsum or approved equal.

2.2 GYPSUM BOARD

A. Fire-Rated Gypsum Board: ASTM C36, Type X, 5/8-inch thick, with tapered and wrapped long edges.

B. Moisture-Resistant Gypsum Board: ASTM C630, Type X, 5/8-inch thick, with tapered and wrapped long edges. Provide for exposed and concealed locations at walls of toilet rooms, janitor rooms, and other wet spaces; do not use on ceilings unless framing spacing is within manufacturer’s acceptable limits.

2.3 GYPSUM BOARD ACCESSORIES

A. Screws: ASTM C954 or ASTM C1 002.

1. Use Type S screws for gypsum board attachment to light steel framing.

2. Use Type S-1 2 screws for gypsum board attachment to 20-gauge and heavier steel framing.

3. Use Type W screws for gypsum board attachment to wood framing.

4. Use Type G screws for gypsum board attachment to gypsum board.

B. Metal Trim:

1. Corner Bead: Fine-mesh expanded-steel wing type, zinc coated in conformance with ASTM A643, G40 coating designation.

2. Control Joint: Steel, perforated-flange wing type, with single bead, zinc coated in conformance with ASTM A653, G40 coating designation.

3. Edge Trim: Fine-mesh expanded-steel flange, zinc coated in conformance with ASTM A653, G40 coating designation.

4. Extruded Aluminum Accessories: Fry Reglet or approved equal reveals, joints and trim where indicated.

C. Joint-Treatment Materials: ASTM C475.

1. Joint Tape: Paper reinforcing tape.

2. Joint Compound: Ready mixed, all-purpose; one grade for bedding tapes and filling depressions, one for second and third coats.

3. Water-Resistant Joint Compound: Use special joint compound to treat joints and cut edges of moisture-resistant gypsum board.

D. Acoustical Sheet Sealant Pad: Harry A. Lowry & Associates, 3M or approved equal.

3. EXECUTION

3.1 INSPECTION

A. Verify that conditions are satisfactory for the installation of gypsum board and accessories.

1. Check framing for accurate spacing, alignment, plumbness, and levelness. Verify that both new and existing framing members will result in gypsum board surfaces complying with specified tolerances.

2. Verify spacing of installed framing does not exceed maximum allowable for thickness of gypsum board to be used.

3. Verify door frames are set for thickness of gypsum board to be used.

4. Repair protrusions of framing, twisted framing members, or unaligned members before installation of gypsum board commences.

B. Do not commence the installation until unsatisfactory conditions have been corrected.

3.2 APPLICATION OF GYPSUM BOARD

A. Apply materials in conformance with ASTM C840, the manufacturer's instructions, and as indicated.

B. When gypsum board is to be applied to both walls and ceilings, apply to ceilings first.

C. For partitions, apply sheets with long dimension perpendicular to framing members

with abutting ends over supports. Where ceiling heights exceed 8'-1" and where required by fire resistive ratings, apply sheets with long dimension parallel to framing members. For ceilings, apply sheets with long dimension either perpendicular or parallel to framing members to result in fewest joints.

D. Use sheets of maximum lengths to minimize end joints.

E. Neatly fit and stagger end joints.

F. Locate joints on different studs at opposite sides of partition.

G. Cut and fit neatly around outlets and switches. Back-to-back wall penetrations shall be at least two stud spaces apart for acoustic insulation.

H. Double-Layer Application:

1. Apply base layer with long dimension parallel to and centered on framing; apply face layer perpendicular to framing. Apply face layer parallel to framing where required by fire-resistive ratings.

2. Stagger sheets of each layer so that joints of each layer are 16-inches apart.

I. Apply gypsum board to curved framing by dampening paper face or scoring approximately one-inch on center. Moisten face and back paper and allow water to soak into core where bending radii require.

J. Isolation of Gypsum Board from Other Construction:

1. Provide perimeter relief where gypsum board abuts structural decks, ceilings, vertical structural elements, or window sections.

2. Finish gypsum board edge with metal casing bead.

3. Seal space between casing bead and structure with continuous sealant bead.

4. Seal around electrical boxes and conduit and pipe penetrations.

5. Seal at base of gypsum board sheets.

L. Installation of Fasteners:

1. Do not locate fasteners less than 3/8-inch from edges or ends of sheets. Do not locate fasteners less than one-inch from edges or ends in horizontal applications.

2. Fire-Rated Partitions: Install fasteners in accordance with CBC Table 7-B.

3. Non-Fire-Rated Partitions: Install fasteners in accordance with CBC Table 25-G.

4. Fire-Rated Ceilings: Install fasteners in accordance with CBC Table 7-C and Gypsum Association "Fire-Resistance Design Manual".

5. Non-Fire-Rated Ceilings: Install fasteners spaced not more than 12-inches on center for screws, 7-inches for nails.

6. Install screws using powered screw guns with adjustable screw-depth control head. Drive shank perpendicular to gypsum board surface. Do not hammer screws.

7. Set fastener heads slightly below surface of gypsum board, but do not break or strip paper face around fastener.

8. Stagger fasteners opposite each other on adjacent ends and edges.

9. Omit fasteners at edges where metal edge trim will be installed.

M. Installation of Accessories:

1. Install corner trim at vertical and horizontal external corners and angles, and edge trim at junctions of gypsum board and other materials and at exposed edges.

2. Control Joints:

   a. Ceilings: Maximum area for ceilings with perimeter relief shall be 2,500-sq. ft.; maximum area for ceilings without perimeter relief shall be 900-sq. ft. Do not exceed 50-feet between control joints in ceilings with perimeter relief; 30-feet between control joints in ceilings without perimeter relief.

   b. Walls and Partitions: Maximum spacing between control joints shall not exceed 30-feet.

3.3 TAPING AND FINISHING

A. Finish Levels: Unless otherwise scheduled, required finish levels for various areas shall be as follows:

1. Level 0: In areas of temporary construction, no taping or accessories are required.

2. Level 1: In plenum areas above ceilings, attics, electrical closets, and other areas not normally exposed to the public, joints and interior angles shall have tape embedded in joint compound. Surfaces shall be free of excess joint compound. Tool marks and ridges are acceptable.

3. Level 2: Where water-resistant gypsum backing board is used as a substrate for tile, joints and interior angles shall have tape embedded in joint compound and one separate coat of joint compound applied over joints, angles, fastener heads, and accessories. Surface shall be free of excess joint compound. Tool marks and ridges not affecting the installation of tile are acceptable.

4. Level 3: Where gypsum board is to receive heavy grade wall coverings, joints and interior angles shall have tape embedded in joint compound and one separate coat of joint compound applied over joints, angles, fastener heads, and accessories. Joint compound shall be smooth and free of tool marks and ridges.

5. Level 4: On surfaces to receive eggshell paint finish, and unless otherwise specified in another finish level, joints and interior angles shall have tape embedded in joint compound and two separate coats of joint compound applied over joints, angles, fastener heads, and accessories. Joint compound shall be smooth and free of tool marks and ridges.

6. Level 5: On surfaces to receive semigloss, or gloss paints, and surfaces subject to severe or critical natural or artificial side lighting, joints and interior angles shall have tape embedded in joint compound and two separate coats of joint compound applied over joints, angles, fastener heads, and accessories. A thin skim coat of joint compound or material manufactured especially for this purpose, shall be applied to the entire surface. The surface shall be smooth and free of tool marks and ridges.

B. Mix joint finishing compounds in accordance with manufacturer's directions.

C. Joints:

1. Center tape over joint and embed in uniform layer of joint compound of sufficient width and depth to provide firm and complete bond. Apply skim coat while embedding tape.

   a. Treat angles with reinforcing tape folded to conform to adjacent surfaces and straight, true angles.

2. Apply finishing compound over taped joints. Apply number of coats specified for each finish level.

a. Spread first coat evenly and feather out beyond joint center approximately 3-1/2-inches.

b. After first coat is dry, sand or smooth to eliminate any high spots or excessive compound and cover with second coat with edges feathered out approximately 6-inches from center of joint. After second coat is dry, lightly sand with fine sandpaper or wipe with a damp sponge to leave a smooth even surface. When sanding, exercise caution not to raise nap of the gypsum board paper.

D. Give dimples at fastener heads and marred spots on surface of gypsum board one coat of joint compound and two coats of finishing compound, applied in same manner specified for joints.

E. Cut edges and openings around pipes and fixtures shall be caulked flush with sanitary sealant as specified in Section 07920.

F. Install metal corner accessories at external corners.

1. Conceal flanges of metal accessories with a minimum of two coats of compound.

2. Extend compound 8- to 10-inches each side of accessories.

G. In the completed installation, gypsum board shall have plumb and straight surfaces with no waves or buckles. Joints, fastener heads, and trim flanges shall be invisible after finishing. Surfaces shall be uniformly smooth and ready for painting or other decoration.

3.4 PROTECTION OF FINISHED WORK

A. Maintain temperature and humidity conditions as required to protect the installation.

B. Protect completed gypsum board from damage or deterioration until final acceptance of the work.

END OF SECTION

PAINTING

SECTION 099100

1. GENERAL CONDITIONS AND SPECIAL CONDITIONS

The General Conditions and Special Conditions are a part of this Section and the Contract for this work. They apply to this Section as fully as if repeated here.

1.1 WORK INCLUDED

All labor, materials and equipment required to complete all painting, priming, and exterior coating work of all new interior and exterior work except as may be specifically omitted; work shall include but not be limited to:

A. Painting shall include but not be limited to:

1. All exposed ungalvanized metal, including all flashing and exposed trim, and structural metal.

2. Hollow Metal Doors and Frames.

3. Exterior columns, walls, slab edges, spandrels and concrete masonry walls exposed to view **(where scheduled).**

4. Interior concrete columns, beams, slab soffits and walls exposed to view (**where scheduled).**

5. Interior concrete masonry walls exposed to view **(where scheduled).**

6. Wet Standpipe System

7. Sheet Metal Downspouts

1.2 RELATED WORK

A. Shop priming, where specified elsewhere.

B. Parking area striping and markings.

1.3 SURFACES NOT TO BE PAINTED

A. EIFS or Portland cement plaster surfaces.

B. Stainless steel, anodized aluminum, bronze, copper, chrome-plated metals.

C. Galvanized pipe handrails, guardrails and other exposed galvanized metals unless specifically indicated as painted on drawings.

D. Fire sprinkler piping and risers.

E. All factory pre-finished items.

F. Finish hardware, except prime coated hardware.

G. Do not paint moving parts of operating units; mechanical or electrical parts such as valve operators; linkages; sensing devices; and motor shafts, unless otherwise noted.

H. Do not paint over required labels or equipment identification, performance rating, name, or nomenclature plates.

I. Area and trench drains with gratings.

1.4 QUALIFICATIONS

A. Work performed only by workmen trained and experienced in type of work required.

B. Paint manufacturer shall have authorized representatives locally available for consultation and quality assurance of materials and methods of their use.

1.5 SUBMITTALS

A. Material List - 4 copies for approval indicating every type of material proposed.

B. Color Samples: Before preparation of any finish material, submit 3 copies of sample brush outs, 8-1/2" x 11" on lightweight cardboard material. Additional samples may be required until colors and textures are approved by the Architect.

C. Extra Materials: Not less than 5 gallons of each color and type used in excess of 5 gallons and/or 1 gallon for colors used in smaller quantity.

1.6 PROTECTION OF WORK

A. Protect finished surfaces, hardware, glass and other work against damage by painting work. Provide all temporary drop cloths, wall coverings and other work as necessary.

B. Work installed under other sections damaged by painting work shall be repaired or replaced as directed by the Architect.

C. Protect painting work in progress; provide barriers, post signs, etc., as necessary.

D. In the event that a finish coat of paint, or other finish applied before other trades have completed their work, become marred, scratched, or otherwise damaged, said surface of finish shall be refinished as part of this section.

1.7 PRODUCT DELIVERY & HANDLING

All materials shall be pure, unaltered, delivered to the project in original, unbroken packages, bearing the manufacturer's name, brand number, and batch number. Cans shall be opened and mixed on the premises. All basic finish materials shall comply with Federal and ASTM Specifications. Where required by the Architect, tests will be performed in accordance with the most recently published revisions of these Specifications.

2. PRODUCTS

2.1 PRIMARY MATERIALS

A. Systems: Prime, intermediate, and finish coats shall be of a single manufacturer.

B. Substitutions proposed shall be reviewed and approved by Architect.

C. Paints shall be products of: or others as may be scheduled or approved by Architect.

Sinclair Paint Co.	Benjamin Moore & Co.
Pittsburgh / PPG	Ameritone Paint Corporation
Frazee Industries, Inc,	Dunn-Edwards Paint Company
Sherman-Williams	Vista

D. Paint numbers and descriptions scheduled herein and on the drawings are those of PITTSBURGH/ PPG used for convenience only to designate type, grade, and quality of materials required.

E. Names or numbers indicate only finish types or series required; colors shall be as selected and approved by Architect after award of Contract.

F. Subsidiary: Thinners, driers and other items shall be as manufactured or approved by primary paint system manufacturer.

3. EXECUTION

3.1 PRE-CONDITIONS

A. Receive, store, open and mix materials and tools only in areas designated by Contractor.

B. Finish hardware at surfaces to be painted shall be removed before painting and re-set after paint is dry.

C. Precautions:

1. Use materials and perform operations by means to avoid accidental fires; as required by code and dictated by good judgment.

2. Remove rags, waste and similar hazardous items from project at end of days work.

3. Excessive accumulations of waste materials not permitted.

D. Inspection of Surface: The Contractor shall inspect all surfaces and satisfy himself that they are in proper condition to receive specified finish before beginning any work. Any areas which are not in proper condition to be painted or finished shall be reported to the Architect, and no work shall be done until defective work has been corrected. Where questionable areas occur, the manufacturer's representative shall be consulted per paragraph 1.3B.

3.2 PREPARATION OF SURFACES

A. General: Surfaces receiving prime or finish paint shall be in proper condition, or properly prepared, and thoroughly dry before starting initial or other painting.

B. Irregularities shall be repaired using:

1. Hard-setting metallic filler for metal surfaces.
2. A paste compound of the finish material mixed with fine silica sand for concrete/concrete block materials.

C. Rough or grainy surfaces and surface repairs: Sand as necessary for proper condition and appearance, except where rough finishes are required.

D. Steel and Iron: Clean free from all grease, dirt, rust and scale as necessary to produce a satisfactory surface for painting.

E. Galvanized and Copper Metals: Thoroughly clean free from grease, oil, or other matter using mineral spirits and wipe dry; etch using Amerace Corp Galvanprime, or equal, each material approved by paint manufacturer and Architect; apply per manufacturer's instructions. Keep solutions free from hardware and other operating devices or prefinished surfaces.

F. Concrete, etc.: Wire brush and wipe to remove laitance and loose materials or otherwise treat as necessary to achieve proper surface conditions. Fill small cracks and bubbles less than 1/4" in diameter. Report larger surface defects to contractor for correction prior to proceeding. Manufacturer's representative shall inspect surfaces for acceptability before applying coats.

G. Sanded or Dusty Surfaces: Wipe free from loose particles.

3.3 PRIME PAINTING

A. Prime Paint Surfaces shown, scheduled or specified for finish painting, except where priming is specifically included or provided under other Sections.

B. Field Priming:

1. Steel Work: Provide field touch up prime coat for surfaces to be permanently enclosed or concealed to completely protect bare metal.

2. Hollow Metal and Miscellaneous Metal: Provide field second prime coat, as scheduled.

C. Clean and/or touch up surfaces found damaged, stained, or with foreign matter prior to priming.

3.4 APPLICATION

A. Painting methods and procedures shall achieve first quality workmanship. Apply each coat of prime or finish paint at proper consistency and brush out evenly, free from sags, runs, drips, brush marks, thin spots, or other irregularities.

B. Transition color or texture changes in level, straight cut-off lines; in corners or at natural breaks only, unless otherwise shown or directed.

C. Weather: Exterior painting shall not proceed during adverse conditions.

D. Number of coats scheduled are minimum required for protection or service. Apply additional material when necessary to achieve completely acceptable coverage or appearance.

E. Use paint, varnish, stain, and coatings as manufactured. Thinning permitted only as allowed by manufacturer for specific purpose.

F. Vary shades of succeeding coats at the same areas. Tint undercoats toward hue required for final coat. Finish colors shall be mixed at the manufacturer's plant, not on the job.

G. Allow adequate drying time between application of coats; 24 hours, unless specifically directed otherwise by the manufacturers representative.

3.5 ADDITIONAL REQUIREMENTS

A. Intent: It is the intent of this specification to cover a complete painting job throughout except on surfaces specifically excepted or covered under other headings, and all surfaces shall be painted or coated to completion. Baked enamel shop coats, spun aluminum or primed metal are not necessarily to be considered as final finish and shall receive additional finish coats specified under this section if directed. Paint grilles and registers if so directed.

B. The Contractor is responsible for producing painted surfaces of even uniform color, free from cloudy or mottled surfaces. Where surfaces to be painted or coated are of character to require additional sealers or treatments in order to produce required results, such sealers or treatments to be applied under this contract.

C. Each coat of paint or stain work shall be available for inspection by the Architect. Should the Architect not be notified prior to the application of succeeding coats an additional coat shall be applied, if so directed, at no additional cost to the Owner.

D. Allow for extensive selection of deep tone or bright accent colors for opaque painted areas.

3.6 COMPLETION

A. Periodically remove unwanted waste, protection materials and other debris resulting from this work, as the work proceeds. Clean adjacent surfaces free from droppings and splatters as the work progresses, all per approved procedures.

B. When complete, areas used for paint and coatings storage for painters work shall be left in an absolutely clean condition when vacated. All painted and coated surfaces shall be free from holidays, skips, sags, or runs and shall have a uniform appearance in color, texture and sheen for the finish system specified and the colors selected. Surfaces found improperly prepared, primed or finished shall be refinished as directed by Architect.

3.7 GUARANTEE

A. The material and workmanship involved in this application shall be guaranteed, under a single document to the Owner. The guarantee shall insure performance of the painting at no cost to the Owner, for a period of one (1) year, from the date of building acceptance by the Owner. Painting materials shall have a five (5) year manufacturer's warranty.

4. SCHEDULES

4.1 FINISHING SYSTEMS

A. Systems specified herein have been selected to cover a variety of materials and surfaces; and shall be used as appropriate for respective materials and surfaces shown, scheduled or otherwise included or required for this Project.

4.2 EXTERIOR FINISHES AND PAINTING (Pittsburgh Paints numbers used, unless otherwise noted): Colors as indicated on plans.

MATERIALS	COATS	DESCRIPTION
Miscellaneous Metals	1	PPG 6-212 Speedhide Rust Inhibitive Alkyd Primer
	1	PPG 90-3xx Series Industrial DTM Acrylic Finish
	1	PPG 90-3xx Series Industrial DTM Acrylic Finish
Hollow Metal Doors (Factory Primed)	1	PPG 90-712 Industrial Acrylic DTM Primer Finish
	1	PPG 90-3xx Series Industrial DTM Acrylic Finish
	1	PPG 90-3xx Series Industrial DTM Acrylic Finish
Galvanized Metal scheduled to be painted	1	PPG 90-3xx Series Industrial DTM Acrylic Finish
	1	PPG 90-3xx Series Industrial DTM Acrylic Finish
Masonry surfaces scheduled to be painted	1	PPG 4-603 Perma-Crete Masonry Primer
	1	PPG 10-1110 Pitt-Cryl Plus Acrylic Flat Finish
	1	PPG 10-1110 Pitt-Cryl Plus Acrylic Flat Finish
Concrete Surfaces scheduled to be painted	1	PPG 10-1110 Pitt-Cryl Plus Acrylic Flat Finish
	1	PPG 10-1110 Pitt-Cryl Plus Acrylic Flat Finish
Exterior Steel	1	Benjamin Moore, M45 Epoxy Mastic Coating
	1	Benjamin Moore, DM74 Aliphatic Acrylic Urethane Gloss

4.3 INTERIOR FINISHES AND PAINTING (Pittsburgh Paints numbers used, unless otherwise noted): Colors as indicated on plans.

Miscellaneous Metals	1	PPG 6-212 Speedhide Rust Inhibitive Alkyd Primer
	1	PPG 90-3xx Series Industrial DTM Acrylic Finish
	1	PPG 90-3xx Series Industrial DTM Acrylic Finish
Hollow Metal Doors (Factory Primed)	1	PPG 90-712 Industrial Acrylic Primer Finish
	1	PPG 90-3xx Series Industrial DTM Acrylic Finish
	1	PPG 90-3xx Series Industrial DTM Acrylic Finish
Galvanized Metal scheduled to be painted	1	PPG 90-712 Industrial Acrylic DTM Primer Finish
	1	PPG 90-3xx Series Industrial DTM Acrylic Finish
	1	PPG 90-3xx Series Industrial DTM Acrylic Finish
Masonry surfaces scheduled to be painted	1	PPG 4-100 Perma-Crete LTC Concrete Block Sealer
	1	PPG 6-714 Speedhide 15 – 25 degree Sheen Latex Dry Fall
	1	PPG 6-714 Speedhide 15 – 25 degree Sheen Latex Dry Fall
Concrete Surfaces scheduled to be painted	1	PPG 6-714 Speedhide 15 – 25 degree Sheen Latex Dry Fall
	1	PPG 6-714 Speedhide 15 – 25 degree Sheen Latex Dry Fall
Gypsum Board, Enamel Eggshell Latex	1	PPG6-4xx Speedhide Interior Latex

END OF SECTION

SIGNAGE

SECTION 1014160

1. GENERAL CONDITIONS AND SPECIAL CONDITIONS

The General Conditions and Special Conditions are a part of this Section and the Contract for this work. They apply as fully as if repeated here.

1.1 SCOPE

A. Provide all interior and exterior door and wall mounted signs, and accessories, complete, as indicated and specified. This includes, but is not limited necessarily to the following:

1. Plaque signs at doors identifying rooms, i.e. electrical room, restroom etc.

2. Disabled accessibility signs (not pertaining to disabled parking spaces, i.e. at restrooms).

3. Related signs for electrical and fire protection systems.

4. Fuel Efficient / Electrical Vehicle parking space identifying signs.

5. Motorcycle parking signage.

1.2 QUALITY ASSURANCE

A. Qualification of Sign Fabricator: All signing shall be performed by a firm with a minimum of five (5) years experience, and which is regularly engaged in fabricating the items required by the Work.

B. Regulatory Requirements:

1. Conform to ABA Accessibility Standard for Department of Defense Facilities for accessibility requirements.

2. Conform to Federal Requirements of the Americans with Disabilities Act (ADA).

1.3 SUBMITTALS

A. Shop Drawings: Submit shop drawing showing text and layout of all sign faces, details of construction and installations. Indicate mounting heights. Provide plan shown locations of all signs. Layouts submitted shall be no less than 1/4 size.

B. Product Data: Submit manufacturer's product data and installation instructions for each signage item listed.

C. Samples: Submit samples of each color and finish for exposed materials. Furnish sample of a finished sign as specified.

1.4 GUARANTEE

A. Guarantee all workmanship and materials furnished for a period of one (1) year after the final acceptance, if during the guarantee period any fading, defects or faulty materials are found, immediately, repair or replace any damage to all finishes or fixtures at no additional expense.

1.5 DELIVERY, STORAGE, AND HANDLING

A. Protect sign from damage. Safely pack, and clearly label with sign type and name. Deliver signs for timely installation, minimizing on-site storage time. Store in a dry, ventilated space, out of weather, and protected from other trades.

2. PRODUCTS

2.1 MANUFACTURERS

A. Provide signs manufactured by Mohawk Sign Systems, Vomar, or equal. Provide all signs of the same type from the same manufacturer.

2.2 INTERIOR WALL SIGNS

A. Manufacturer: Mohawk “series 200A”, ASI Sign Systems, or equal.

B. Description:

1. Features: 1/8-inch thick sand-carved raised letters carved into 1/8-inch thick hard phenolic ES plastic laminate, letters raised 1/32-inch, sign shape with square corners and square edges, letters all caps minimum 5/8-inch high, letter style “Helvetica Medium”, Size lettering and signs as small as possible to fit the required design.

2. Colors: To be selected by the Owner’s representative.

3. EXECUTION

3.1 EXAMINATION

A. Examine the substrates and conditions under which signs are to be installed. Do not proceed with the Work until unsatisfactory conditions have been corrected

3.2 INSTALLATION

A. General: All installations shall be in accordance with manufacturer’s printed instructions and recommendations.

B. Surface mount interior signs on substrates as follows:

1. Wood: Mechanical mounting, with zinc-plated steel wood screws.

2. Metal: Double-faced vinyl tape.

3. Gypsum Board: Mechanical mounting, with zinc-plated steel wood screws into wall anchors.

4. Concrete and Concrete Block: Mechanical mounting, with zinc-plated steel wood screws into wall anchors.

C. Install exterior plaque signs using stainless steel screws.

3.3 CLEAN AND ADJUST

A. Remove and replace material which is broken, chipped, cracked, abraded, or damaged in any other way during the construction period, including natural causes, accidents and vandalism.

B. Clean sign material using only cleaners and methods in accordance with the manufacturer's instructions.

END OF SECTION

NON- ILLUMINATED SIGNS

SECTION 101436

1. GENERAL CONDITIONS AND SPECIAL CONDITIONS

The General Conditions and Special Conditions are a part of this Section and the Contract for this work. They apply as fully as if repeated here.

1.1 SCOPE

A. Provide all code required exit and accessible (handicap) signage and all other non-illuminated signs as indicated on the design criteria drawings. Include all sign supports, inserts and attachments required for signs, in place.

1.2 QUALITY ASSURANCE

A. Qualification of Sign Fabricator: All signing shall be performed by a firm with a minimum of five (5) years experience, and which is regularly engaged in fabricating the items required by the Work.

B. Responsibility for structural engineering of the signs and information devices is the responsibility of the sign fabricator.

1.3 SUBMITTALS

A. Samples of all materials and processes, including colors to be incorporated in the signs and graphics, shall be submitted by the sign fabricator, with review of such samples required before proceeding with fabrication of the actual signs and graphics.

B. A prototype of each different sign type shall be fabricated and submitted for approval prior to commencing with fabrication of the remaining signs of this type. Prototype is to include mounting mechanism, and hardware.

1.4 GUARANTEE

A. Guarantee all workmanship and materials furnished for a period of one (1) year after the final acceptance, if during the guarantee period any fading, defects or faulty materials are found, immediately, repair or replace any damage to all finishes or fixtures at no additional expense.

2. PRODUCTS

2.1 MATERIALS

A. Typograph:

1. Letters shall be Helvetica Medium. Alternate letterforms will not be acceptable.
2. Letter spacing shall be “normal”.
3. Margin Spacing Standard, unless shown otherwise.
4. Interline Spacing Standard, unless shown otherwise.
5. Arrows – Square shaft as indicated on drawings.
6. Arrow/Symbol Placement and Spacing – as shown on drawings.

7. Letters – vinyl die-cut, premium Scotchlite 5-year vinyl letter, 3.5 mils. Thickness minimum and 6.0 mils. Maximum as manufactured by 3M.
8. Messages indicate the exact wording, capitalization, punctuation, and symbols.

B. All materials shall be new stock, free from defects which impair strength, durability or appearance. All signs and components shall be complete and free from visual, structural or mechanical flaws.

C. Sign lettering, directional arrows and symbols shall be provided in the sizes, colors and letter styles as shown on the sign schedules and drawings. All lettering shall have all edges and corners of letterforms true, clean, photographically precise and must accurately reproduce the letterform.

D. Metal Signs: Sign panel is to be 14 gage hot rolled steel sheet or .125 aluminum sheet. Apply minimum 3 coats semi gloss enamel manufactured especially for exterior use on metal, for 5 mil dry thickness minimum (excluding primer). Copy is to be self adhering die-cut vinyl, 3-M Scotchlite, or equal compatible with sign face material, applied uniform in color, opaque and free from bubbles or other surface imperfections.

E. Steel Support Post: Hot rolled molded steel square tube 2” x 2” x 1/8” wall. Provide 18 gage steel angles minimum, spot welded to sign panel and pop rivet angles to post.

F. Interior Non-Illuminated Fiberboard Signs: Fabricate with 1” matte finish, medium density fiberboard. All surfaces and edges are to be sealed and painted in the same color. Graphics shall be applied with vinyl die-cut Scotchlite, pressure sensitive lettering.

G. Mounting: Signs of this type are to be mounted in one of two ways, depending on location:

1. Cable Hung: 3/16” stainless steel aircraft stand wire cable at maximum 1’-0” from each end of required length hanging from slab soffit threaded eye bolt inserts. Provide ‘Nico’ press type compression fittings and all other required cable crimp/clamps, as required for a complete assembly. Cross brace with stainless steel aircraft strand cable as required.

2. Face Mount: To be applied by adhesive to the face of the beam.

H. Interior Non-Illuminated Wall Painted Signs & Graphics: All signs in this category will be painted directly on concrete walls or columns within the parking structure by the Frisket procedure. Paint used must be a type suitable for concrete, in a semi-gloss finish. Finish coat of paint must be applied in a way to produce a hard, crisp edge, and be free from brush marks and shall be white.

3. EXECUTION

3.1 FABRICATION AND ASSEMBLY

A. Furnish anchors, fastenings, attachment metals, and other miscellaneous metal items needed to accomplish the work, including fasteners embedded in concrete or building walls.

B. Fabricator to be responsible for the correct direction of arrows on all signs, and for requesting a change of spacing if required to fit on the intended sign panel or space.

C. All bonded or fabricated panels shall have faces of such flatness that when measured from corner to corner along the diagonal, the maximum deviation from the nominal plane of surface shall not exceed 1/16” for measured distances up to 5’.

D. Colors, materials, hardware and fittings actually used on the signs and structures shall match the approved samples.

E. Fastenings on sign-face surfaces shall not be exposed, except where noted.

F. Sign-face surfaces shall not be deformed, distorted, or discolored by attachment of concealed fastenings.

G. All fastenings shall be resistant to oxidation or other corrosive action because of their composition, completely through their cross sections.

H. All work shall be secured with fastenings of the same color and finish as the components they secure, where they are exposed to view, except where noted.

I. Fabrication work with fastenings shall be utilized in strict accordance with their manufacturer’s specifications, directions, recommendations, and as indicated on design intent drawings.

3.2 INSTALLATION

A. All signs shall be installed in the locations indicated on the Drawings, per design intent and/or approved shop drawings.

B. Installation shall be done in a manner to withstand all actions imposed by wind, water and other environmental forces.

END OF SECTION

WOVEN WIRE PARTITIONS AND FENCES

SECTION 102213

1. GENERAL

1.1 SYSTEM DESCRIPTION

A. Design Requirements:

1. Interior woven wire fence to separate parking areas as indicated.

1.2 QUALITY ASSURANCE

A. Single Source Responsibility: Provide woven separator fence as complete units controlled by single source including necessary accessories, fittings and fastenings.

1.3 DELIVERY, STORAGE AND HANDLING

A. Comply with requirements of Section 016600.

2. PRODUCTS

2.1 MANUFACTURERS

A. Acceptable Manufacturers:

1. Ametco Manufacturing, Willoughby, OH.
2. G-S Company; Miller Wire Works, Inc.
3. McNichols Co.
4. Indiana Wire Products, Inc..

2.2 MATERIALS

A. Woven Wire Cloth Panels:

1. Completely assembled insert units for attachment to handrail and guardrail systems and including all necessary mounting accessories, fittings and fastenings.
2. Mesh: O.120 inch crimped wire woven into 2 by 2-inch square mesh, securely clinched to frames.
3. Heavy-Duty Wire Mesh Partitions: 0.192-inch- (4.8-mm-) diameter, steel dowel for gates and doors.
4. Frames: 1-inch x 1/2-inch x 1/8-inch channel with 1-inch closure strip.
5. Attachment clips: 2-inch x 2-inch x 1/4-inch plate welded to frame and posts in quantities recommended by manufacturer.
6. Finish: Galvanized after fabrication.

B. Framework:

1. Galvanized steel, ASTM A53 or A123, Schedule 40 steel pipe, A569 for hot-rolled sections with minimum yield strength of 45 ksi with not less than 18 ounce zinc/square feet of surface.
2. Provide one-piece sections without joints.

3. Size posts and rails to comply with ASTM F669.

4. Finish: Match fabric.

3. EXECUTION

3.1 EXAMINATION

A. Examine conditions and proceed with work in accordance with General Conditions.

3.2 INSTALLATION

A. Install from top of slab or wall to underside of structure in accordance with written manufacturer's instructions.

B. Setting:

1. Provide top and bottom fittings for securing posts to slab or wall and to structure.
2. Check each post for vertical and top alignment and hold in position during fastening operations.
3. Take appropriate precautions to determine locations of post-tensioning tendons before installing anchors.

C. Fabric:

1. Install from top of slab or wall to underside of structure.
2. Install mesh taut and fasten to posts.
3. Properly align and secure woven wire infill panels to posts.

D. Fasteners:

1. Install nuts and hardware bolts.
2. Peen ends of bolts or score threads to prevent removal of nuts.

END OF SECTION

TOILET ACCESSORIES

SECTION 10 28 13

1. GENERAL CONDITIONS AND SPECIAL CONDITIONS:

The General Conditions and Special Conditions are a part of this Section and the Contract for this work. They apply to this Section as fully as if repeated here.

1.1 DESCRIPTION:

A. This Section sets forth general requirements applicable to the toilet accessories work and materials required throughout the project regardless of which trade is responsible for installation, including, but not limited.

1.2 SUMMARY

A. This Section includes the following:

1. Washroom/Toilet accessories.
2. Shower accessories.

B. Related Sections include the following:

1. Section 06 20 00 Finish Carpentry: for backing support.
2. Section 09 29 00 Gypsum Board:

1.3 SUBMITTALS

A. Product Data: For each type of product indicated. Include the following:

1. Construction details and dimensions.
2. Anchoring and mounting requirements, including requirements for cutouts in other work and substrate preparation.
3. Material and finish descriptions.
4. Features that will be included for Project.
5. Manufacturer's warranty.

B. Product Schedule: Indicating types, quantities, sizes, and installation locations by room of each accessory required.

1. Identify locations using room designations indicated on Drawings.
2. Identify products using designations indicated on Drawings.

C. Setting Drawings: Where cutouts are required in other work, provide substrate preparation instructions, and directions for preparing cutouts and for installation of anchorage devices.

D. Maintenance Data: For toilet and shower accessories to be include in maintenance manuals.

1.4 REFERENCES (including but not limited to)

A. CBC – Chapter11B, Accessibility.
B. ADA, Accessibility Guidelines for Buildings and Facilities, Federal Register Volume 56, Number 144, Rules and Regulations.
C. ANSI A117- 1986 Specifications for Making Buildings and Facilities Accessible to and Usable by Physically Handicapped People.
D. Fair Housing Amendments Act of 1988, Accessibility Guidelines, Federal Register Volume 56,

1.5 QUALITY ASSURANCE

A. Source Limitations: For products listed together in the same articles in Part 2, provide products of same manufacturer unless otherwise approved by Architect.

1.6 COORDINATION

A. Coordinate accessory locations with other work to prevent interference with clearances required for access by people with disabilities, and for proper installation, adjustment, operation, cleaning, and servicing of accessories.

B. Deliver inserts and anchoring devices set into concrete or masonry as required to prevent delaying the Work.

2. PRODUCTS

2.1 MATERIALS

A. Stainless Steel: ASTM A 666, Type 304, 0.0312-inch minimum nominal thickness, unless otherwise indicated.

B. Brass: ASTM B 19 flat products; ASTM B 16, rods, shapes, forgings, and fiat products with finished edges; or ASTM B 30, castings.

C. Steel Sheet: ASTM A 1008/A 1008M, Designation CS (cold rolled, commercial steel), 0.0359-inch minimum nominal thickness.

D. Galvanized Steel Sheet: ASTM A 653/A 653M, with G60 hot-dip zinc coating.

E. Galvanized Steel Mounting Devices: ASTM A 153/A 153M, hot-dip galvanized after fabrication.

F. Fasteners: Screws, bolts, and other devices of same material as accessory unit and tamper and-theft resistant where exposed, and of galvanized steel where concealed.

G. Chrome Plating: ASTM B 456, Service Condition Number SC 2 (moderate service).

H. ABS Plastic: Acrylonitrile-butadiene-styrene resin formulation.

2.2 WASHROOM ACCESSORIES

A. Model numbers for toilet room accessories manufactured by Bobrick Washroom Equipment, Inc. are listed to establish a standard of quality for design, function, materials, workmanship, and appearance. The following manufacturers may be submitted for evaluation by the architect. Unless approval is obtained, all bids shall be based on the standard of quality.

1. Bobrick Washroom Equipment, Inc.
2. American Specialties, Inc.
3. Bradley

B. Accessories shall be the products of a single manufacturer. Accessories with tumbler locks shall be keyed alike with the exception of coin boxes in vending equipment.

C. See drawing for schedule accessories

2.3 UNDERLAVATORY GUARDS

A. Basis-of-Design Product: The design for accessories is based on products indicated.

1. Plumberex Specialty Products, Inc.
2. TCI Products.

B. Underlavatory Guard:

1. Basis-of-Design Product: Truebro, Inc.: "Lay-Guard."
2. Description: Insulating pipe covering for supply and drain piping assemblies, that prevent direct contact with and burns from piping, and allow service access without removing coverings.
3. Material and Finish: Antimicrobial, molded closed cell vinyl, "China White."

2.4 FABRICATION

A. General: Fabricate units with tight seams and joints, and exposed edges rolled. Hang doors and access panels with full-length, continuous hinges. Equip units for concealed anchorage and with corrosion-resistant backing plates.

B. Keys: Provide universal keys for internal access to accessories for servicing and resupplying. Provide minimum of six keys to Owner's representative.

3. EXECUTION

3.1 INSTALLATION

A. Install accessories according to manufacturers' written instructions, using fasteners appropriate to substrate indicated and recommended by unit manufacturer. Install units level, plumb, and firmly anchored in locations and at heights indicated.

B. Grab Bars: Install to withstand a downward load of at least 250 lbf, when tested according to method in ASTM F 446.

3.2 ADJUSTING AND CLEANING

A. Adjust accessories for unencumbered, smooth operation. Replace damaged or defective items.

B. Remove temporary labels and protective coatings.

C. Clean and polish exposed surfaces according to manufacturer's written recommendations.

END OF SECTION

FIRE EXTINGUISHERS AND CABINETS

SECTION 104400

1. GENERAL

1.1 SUMMARY

A. Related Requirements: Comply with following:

None

1.2 DEFINITIONS

A. Where indicated on Drawings, abbreviation FE defines fire extinguisher and cabinet.

1.3 SUBMITTALS

A. General: Submit in accordance with General Conditions.

B. Product Data: Furnish manufacturer's descriptive literature.

1. Include physical dimensions, operational features, color and finish, anchorage details, material descriptions, and type of hardware.

B. Shop Drawings: Include rough-in measurements, locations, and details for cabinets.

C. Samples: Submit sample of manufacturer's standard finish and color on actual base metal.

D. Informational Submittals: Submit following packaged separately from other submittals:

1. Certifications: Comply with Quality Assurance requirements.
2. Manufacturer's Instructions: Installation instructions for fire extinguisher cabinets.

1.4 QUALITY ASSURANCE

A. Single Source Responsibility: Obtain products in this Section from one manufacturer.

B. Certifications: Submit certification of following:

1. Extinguishers: UL listed and bear UL rating for type and classification or conform to NFPA-10 requirements for extinguishers.

1.4 PROJECT CONDIIONS

A. Environmental Requirements: Do not store products subject to freeze damage in environments where damage could occur.

2. PRODUCTS

2.1 MANUFACTURERS

A. Acceptable Manufacturers, Fire Extinguisher Cabinets:

1. JL Industries, Bloomington, MN.
2. Larsen's Manufacturing Co., Minneapolis, MN.
3. Potter Roemer, Santa Ana, CA.

2.2 FIRE EXTINGUISHER

A. Fire Extinguisher Type 4A:80B:C: Multi-purpose Dry Chemical Type (Siliconized Mono Ammonium Phosphate) with Pressure Gage.

1. Capacity: 10.0 pounds.
2. UL Rating: 4A-80B:C.
3. Acceptable Product: J.L. Industries Cosmic E. Series,

2.3 CABINETS

A. Fire Extinguisher Cabinet: Formed sheet metal 20 gage.

1. Recessed, semi-recessed, and surface mounted type as indicated.
2. Size to accommodate fire extinguisher and accessories.

B. Cabinet Components:

1. Trim: Flat for recessed cabinets, returned to wall surface for semi-recessed, prime painted steel.
2. Door: Prime painted steel.

a. Thickness: 20 gage minimum, reinforced for flatness and rigidity.
b. Latch: Lever handle with cam latch.
c. Door Style: Vertical view panel.
d. Glass: 1/8 inch thick tempered glass.

3. Mounting Hardware: Appropriate to cabinet.
4. Graphic Identification: Individual, die-cut, press-on letters.

2.4 ACCESSORIES

A. Fire Extinguisher Brackets: [for extinguishers without cabinets] Similar to Larsen's B series or Potter-Roemer 3900 full length wall brackets, size as required for cylinder used.

2.5 FABRICATION

A. Form body of cabinet with tight inside corners and seams.

1. Predrill holes for anchorage.
2. Form perimeter trim and door stiles by welding, filling and grinding smooth.
3. Hinge doors for 180 degree opening with continuous piano hinge. Provide lever handle with cam latch.
4. Glaze doors using manufacturer's standard methods.

2.6 FINISHES

A. Extinguisher: Red enamel.

B. Cabinet Door and Trim: Prime painted steel. Paint in accordance with Section 099100.

3. EXECUTION

3.1 EXAMINATION

A. Examine conditions and proceed with Work in accordance with General Conditions.

1. Verify rough openings for cabinets are correctly sized and located.

3.2 INSTALLATION

A. Fire Extinguishers and Cabinets: Install in accordance with manufacturer's printed instructions.

1. Cabinets: Install plumb and level in wall openings at locations indicated on Drawings.
2. Securely attach cabinets and mounting brackets in place to wall blocking.

B. Identification: Identify Fire Extinguisher Locations with Following Methods:

1. Fire Extinguisher Locations with and without Cabinets: Use vertical decal spelling FIRE EXTINGUISHER applied to adjacent wall surface.

END OF SECTION

PARKING CONTROL EQUIPMENT

SECTION 111200

1. GENERAL CONDITIONS AND SPECIAL CONDITIONS

The General Conditions and Special Conditions are a part of this Section and the Contract for this work. They apply to this Section as fully as if repeated here.

1.1 SCOPE:

A. Required: Provide all labor, materials, tools, plant equipment and transportation required to perform all operations necessary to furnish and install all parking control equipment indicated in the Contract Documents and as required for a complete and operable control system, including, but not necessarily limited to the following:

1. Entrance-exit control equipment, including barrier gates, ticket dispensers, card access terminal, card readers and supports, loop detector assemblies, cashier terminal and prefabricated parking booths.

2. Capacity counter at each control location coupled to master control panel and to automatically control the "FULL" sign and shall be equipped with override switches.

3. Verification of locations of pipe guards in respect to protection of equipment and serviceability of parking equipment.

4. Conduit and wiring between control equipment items at each control location; and connection to electrical power source at each control location.

5. Any additional conduit, with wire, and modifications necessary to conduit shown, for a completely operable installation of the parking control system.

6. Supervision of installation of power supply location by Electrical Subcontractor, and verifying suitability for parking control equipment systems.

B. Work Not Included In This Section:

1. Concrete Curbs: Refer to Section 03 30 00 Concrete Cast-in-Place.

2. Steel pipe guards: Refer to Section 05 50 00 Metal Fabrications.

3. Division 26: Electrical power conduit, wiring and junction boxes to each control location.

1.2 PARKING OPERATIONS:

A. Parking Control Concept:

1. Operations:

a. Visitor - Ticket in/cashier out
b. Monthly - Card in/card out

B. Level of Control:

1. Card System:

a. Stand alone system
b. Anti-passback
c. Card cancel
d. Concealed code

2. Revenue:

a. Automatic fee calculation.

C. Access:

Ingress and egress for visitors and monthly card holders at P-1.

2. PRODUCTS:

2.1 MANUFACTURERS AND MATERIALS:

A. Materials: Parking control equipment and systems shall be manufactured by a firm regularly engaged in the manufacture of such equipment for a period of at least five years. To be considered as acceptable the manufacturer shall submit a list of major parking structure installations for which it has furnished parking control systems, which operated successfully, within two years and shall provide maximum response time of 24-hour service on the equipment.

B. All Materials: New first quality as manufactured by, Amano McGann, Federal APD or approved equal.

C. Equipment Numbers Listed: Amano McGann.

D. Equipment:

1. Vehicle Detector: Amano McGann MT-130 Dingle Channel Vehicle Detectors.

2. Booth: Parking Attendant/Control Booth Install Pre-assembled steel Booth by:

B.I.G. Enterprises Inc. PARKUT, Porta-King or equal - one (1) 5'-6 x 7'-6' size (disabled accessible) all steel for exterior use Unit to be designed for exterior use with 8" fascia. Provide complete with:

BASE and FLOOR: Standard base height shall be 4" for outside use. No floor – set on concrete surface.

FRAME: Unit to be constructed of minimum 2" x 2" x .083 structural steel tube frame with 16ga galvanized steel walls and roof.

PAINT: All steel surfaces shall be painted with rust inhibitive primer. All exposed interior and exterior steel surfaces shall be electrostatically painted with on finish coat of industrial color polyurethane paint. Choice of single color of paint as selected by OWNER.

LIGHTING: Interior florescent lights recessed in a16ga. galvanized steel ceiling with wall switch.

WIRING: Unit(s) complete with all wiring required for fluorescent light, three duplex outlets mounted under counter, heater and 120\240 volt three wire, 12 pole, 125 amp single phase breaker panel. All wiring NO.12 minimum, enclosed in EMT. All fittings, wiring devices and fixtures UL approved. Ready for site connection.

AIR CONDITIONER: 11,600 BTU through the wall mounted air conditioner with 11,600 BTU heating.

DOORS: Shall be aluminum construction and include glass, locks and hardware. Fully weather-stripped. Doors shall be top suspended sliding type stainless steel guide and commercial steel ball bearing rollers,

WINDOWS: Windows shall be aluminum construction and include glass, locks and hardware. Sliding windows shall include screens. Provide commercial steel framed horizontal slide window opposite the door, and fixed windows on all other sides.

GLASS: Door(s) and windows shall contain clear tempered safety glass 1/4" minimum thickness.

SHELF or COUNTER: 20” deep steel shelf 14 ga. painted steel. Counter includes 16" wide steel storage drawer.

Provide complete shop drawings and equipment list, supplier to coordinate with electrical and plumbing contractors for location of required stub-ups etc.

3. Gate: Amano McGann AMG-1750 Barrier Gate. Verify use of articulating arm requirements. Provide additional replacement arms, six (6).

4. Ticket Dispenser: Amano McGann Model AMG-2000. Provide 150,000 sequenced and serial numbered tickets.

5. Card Reader: Amano McGann Proximity Reader with cards individually coded and serial numbered. Provide 1000 cards.

6. Capacity Counter: Amano McGann Model MT224 Differential Space Counter which operates "FULL" signs at entry location in conjunction with a master panel system located in the parking booth. Capacity counter shall be a total system linked to the ticket dispensers to operator the "FULL" signs and to the card readers to provide total capacity count at any given time for a manual override of the system.

7. Cashier Terminal: Amano McGann AGP-5200 Fee Computer and Validator which integrates the presence detector, fee indicator sign and barrier gate.

8. Full Sign: Amano McGann LED Full Sign mounted at the entrance to the garage, controlled by differential capacity counters.

9. Fee Indicators: Amano McGann AGP-5900.

E. Equipment Location: The parking control equipment will be located at the entry/exit locations on the P-1 level.

1. Control Lane No. 1(E) Monthly and Visitor entry from Street.

   1A - Loop Detector Assembly
   1B - Ticket Dispenser
   1C - Ticket Dispenser (second one to be provided per City Requirement)
   1D - Card reader mounted in ticket dispenser
   1E - Gate with 8’ arm
   1F - Loop Detector Assembly

2. Control Lane No. 2 (X) Monthly and Visitor Exit to Street.

   2A - Loop Detector Assembly
   2B - 5'-6 X 7’-6” Booth
   2C - Card reader mounted on pipe stanchion
   2D - Cashier Terminal
   2E - Fee Indicator
   2F - Phone
   2G - Gate with 8' arm
   2H - Loop Detector Assembly

3. Control Lane No. 3 (X) Monthly Exit to Street.

   3A - Loop Detector Assembly
   3B - Card reader mounted on pipe stanchion
   3C - Gate with 8’ arm
   3D - Loop Detector Assembly

F. Master Control Panel

1. Counters shall be add and subtract type, complete with counter and reset switch operating on direct current with a 5 ampere blow fuse. Enclose counters in a dustproof housing and install in such a manner that the figures are visible from the outside of a control cabinet without opening panels or doors. Each counter shall include buttons to add and subtract manually when resetting and a mastercounter only shall be provided with a switch to bypass counter. All wires leading from counter shall be manufactured to completely eliminate jamming or miscounting when there are simultaneous impulses created by cards entering and exiting at the same time. The master counter shall be constructed so as to automatically turn on signs, add an indicator light at the control cabinet indicating that the garage lot is full and not enter when there are no spaces available. By means of using the bypass switch on the control cabinet, cars can be allowed to enter on certain occasions, even though the spaces allocated for visitors are filled. The counter shall be made to keep an accurate count of these "overloaded" cars. The "FULL" signs shall flash on and off until such time as there is a parking space available.

   The counters for auditing vehicles entering and exiting structure will transmit information to control panel. This master control panel will be located in the booth.

2. Control Cabinet: This unit shall contain all the counters, indicator lights, manual buttons for resetting, bypass switches, all other necessary equipment, and all wire terminal strips for control wires entering the bottom of the cabinet from conduits stubbed up on the floor. The cabinet shall be internally heated with suitable electric heaters of proper wattage to ensure operating during cold and moist weather conditions.

   Colors: All equipment cases and parking booths shall be finished with the same paint. Contractor to submit full range of color samples for selection by the ARCHITECT.

2.2 PERFORMANCE SPECIFICATIONS

A. Inductive Loops
1. Shall be cut-in to paving surface
2. Shall be sized to equipment manufacturer specifications.
3. Shall not be spliced.
4. Limit loop lead length, 100 feet maximum.
5. Loop leads to be twisted 4 twists per foot minimum
6. Be contained in separate conduit to prevent interference from electrical signals.
7. Loop depth
   a. To be ¾" maximum for structured concrete surface
   b. To be 1 ½" maximum for non-structured concrete surface
8. Loop sealant to be "3M Loop Sealant"

B. Automatic Gate
1. **Purpose.** One way pay direction traffic with gate opening initiated by presentation of card to the card reader or detection of a vehicle presence as it passes over the loop. The gate shall return to the lower position upon signal from the detector (closing loop) located beyond the gate arm.
2. **Required Features/Functions.**
   The gate control circuitry shall be contained on a printed circuit board unit that shall be housed in a pluggable control box. The control box shall allow access to control switches mounted on the printed circuit board. The gate operational modes and features shall be dipswitch selectable. A switch to raise, lower and select automatic functioning of the gate shall be provided on the control box.
   a. Extra Sensory:
      This feature shall ensure that the gate arm will reverse direction and return to the UP position if it strikes an object during its descent or senses the presences of a vehicle. The gate arm will remain up until automatically reset. The reset means shall be switch selectable between a time period of 5 or 10 seconds, and a close signal. This function shall be initiated by a mechanical sensing action that must be contained in the gate housing. The external mounting of tubes, wiring and electrical devices on the gate arm shall not be accepted.
   b. Auto Stop:
      The gate arm shall immediately stop its downward travel if the gate closing loop detector senses the presence of a vehicle, and will resume its downward travel after the vehicle leaves the closing loop.
   c. Upper Mechanism:
      The gate housing shall allow the access door to be placed in at minimum two-different positions independent of the gate arm.

d. Gate Cabinet:
   1. Heavy-duty, 14-gauge all-weather steel welded construction with high-density polyethylene or similar cover.
   2. Manufacturer's standard powder-coated paint finish
e. Service Access:
   1. Removable cover over drive mechanism for 360° access
   2. Removable door for access to electrical connections and control box
f. Motor Characteristics:
   1. Horsepower: 1/3, single phase
   2. Instantly reversing motor
   3. Heavy duty single V-belt to drive gear reducer
   4. Internal thermal/overload circuit breaker protection with manual reset
   5. Heavy duty sleeve bearing, capacitor type motor
   6. All motor, relay and solenoid power shall be provided with fused protection
g. Electrical:
   Gate operation shall be controlled by microcontroller technology contained on a solid state PCB. Low voltage DC circuits shall be used to provide positive control. AC control circuits will not be acceptable. Plug-in, printed circuit modules shall be incorporated for low voltage power.
   1. Input voltage 120VAC, 60 Hz
   2. Connections:
      a. Main power DIN rail terminal blocks
      b. Removable field wiring terminal block assembly
   3. Automatic thermostatically controlled heater strip
   h. Control Panel:
   1. Plug-in installation
   2. ON/OFF main power and logic circuit breakers
   3. Manual UP/NORMAL/DOWN switch
   4. Minimum of one service utility power outlet
   5. Service Light with ON/OFF switch

C. Vehicle Detector

1. **Purpose.** Vehicle Detectors shall be installed and used in conjunction with the parking gates, ticket dispensers, and exit station. The installation of the vehicle detector shall include an inductance loop embedded in the pavement of the traffic lane. This loop and detector combination shall detect the presence of a vehicle as it passes over the loop. The vehicle presence signal can then be used to arm the parking equipment for use, to signal the operation of the equipment (ticket issuance, gate arm opening or closure), and used for facility count and monitoring purposes.
2. **Required Features/Functions.**
   a. Compact Plug-In Design
   b. Selectable Permanent Presence
   c. Loop Isolation Protection
   d. Loop Frequency Selection
   e. Automatic Sensitivity Boost
   f. Detection Filter Guards Against Small or Fast-Moving Objects
   g. Selectable Directional Logic

3. EXECUTION

3.1 WORKMANSHIP

The control system to be installed will require certain items to be placed in the concrete structure. A requirement of this Section is the supervision, by the manufacturer, of the installation and wiring of all equipment under this section.

A. Using experienced mechanics and technicians and qualified supervision, furnish workmanship in fabrication and installation of all items under this Section, to the highest trade and manufacturing standards.

B. Unless directed, specified, or indicated otherwise, install al materials, equipment, etc. in strict accordance with the manufacturer's written recommendations, the approved shop drawings, the ARCHITECT's instruction, the requirements of the specification Section, and in accordance with the National Electrical Code.

3.2 SHOP DRAWINGS:

A. Furnish shop drawings complete in every respect, with all dimensions, shapes, sizes, methods of fabrication and assembly, wiring diagrams, including interfacing requirements with red/green ball type lights or "FULL"signs, conduit sizes, etc. shown as noted, and all details for installing items in the work included. Also indicate protection locations, if required furnished by others.

B. Provide brochures and descriptive data of all accessories, including the installation of same and the operation of the complete system.

C. Submit copies of the shop drawings per the pertinent sections of these specifications. Commence no fabrication or installation on the site prior to receipt of the final approved drawing sets, etc.

3.3 EXAMINATION

A. Inspect setting surfaces, power wiring and conduit installation equipment and report immediately in writing to the Owner and/or representative/designee any conditions related work which are unsuitable for proper execution of this work.
B. Prior to starting work, carefully inspect installed work of other trades and verify that such work is complete to point where work of this section may properly commence. Notify the Owner and/or representative/designee in writing of conditions detrimental to the proper and timely completion of work.
C. Verify that anchor bolts and curbs are ready to receive the work and dimensions area as indicated on the shop drawings.
D. Do not begin installation until all unsatisfactory conditions are resolved. Beginning work constitutes acceptance of site conditions and responsibility for defective installation caused by prior observable conditions.

3.4 INSTALLATION

A. Install Parking Equipment in accordance with Manufacturer's recommendations and the approved shop drawings.
B. Installation shall be by factory-trained technicians experienced in installation of parking and access control systems.
C. The Parking System Supplier shall assume all pavement and end curbs within the garage are in place. Concrete islands for the mounting of parking gates and similar equipment are assumed to be in place. No construction by the Parking System Supplier involving the installation of islands or curbs shall be required.

D. Demonstrate the satisfactory electrical and functional performance of all features within the Parking Equipment to the satisfaction of Owner and/or representative/designee.

3.5 START-UP AND COMMISSION

A. Adjustment and tune the system as required assuring proper operation. After installation, test all functions of the Parking Equipment.
B. Demonstrate the satisfactory electrical and functional performance of the entire parking equipment satisfaction of the Owner and/or representative/designee of the following operation:
   1. The successful use of a parker access control card reader to activate gate to enter the facility.
   2. The successful use or remote controls to operate the parking gates.
   3. The proper operation of the gate opening switches.
C. The parking equipment will be considered acceptable after being 100% operational and after having performed satisfactorily for fourteen (14) continuous business days with no down time after approval by the Owner and/or representative/designee subsequent to final acceptance by owner.

3.6 TRAINING

A. The equipment supplier shall provide on-site training in the operation of the system. Training shall be based on initial training session with two follow up sessions.
B. Provide 8 hours of on-site preventative maintenance and service training on the equipment and system.
C. Provide three (3) copies of all maintenance manuals, bound in 3-ring binder.
D. Provide three (3) copies of all operation manuals hardware bound in 3-ring binder.

3.7 GUARANTEE:

Parking equipment shall be fully guaranteed against any defective materials and workmanship for a period of one (1) year from date of final acceptance of the job.

END OF SECTION

HYDRAULIC ELEVATOR

SECTION 142400

1. GENERAL CONDITIONS AND SPECIAL CONDITIONS

The General Conditions and Special Conditions are a part of this Section and the contract for this work. They apply to this Section as fully as if repeated here.

1.1 SCOPE

The work under this section shall include all labor, materials, and equipment required to furnish and install complete, the Five-Stop Collective Control Hydraulic Elevators as indicated and specified, including hoistway entrances and car enclosures.

A. In all cases where a device or part of the equipment is herein specified in the singular, it is intended that such reference shall apply to as many of such devices or parts as are required for a complete installation.

B. All work shall be performed in accordance with the latest revised edition, as of the date bids are received, of the American National Standard Safety Code for "Elevators, Dumbwaiters, Escalators, and Moving Walks" (ANSI A17.1), the National Electrical Code, and such State and local codes as may be applicable.

C. Identification for convenience of physically handicapped persons shall comply with California Building Code Chapter 11B and Americans With Disabilities Act of 1990. (ADA) and (ADDAG) latest revisions.

1.2 WORK NOT INCLUDED IN THE CONTRACT

A. A legal hoistway, properly framed and enclosed, and including a pit of proper depth, provided with ladder, drains, lights, and access doors, as required. Suitable machine room, adequate for the elevator equipment, including floors, foundations, lighting, ventilation and heat to maintain the room at a temperature of 55 degrees F. minimum to 90 degrees F. maximum.

B. Adequate supports and foundations to carry the loads of all equipment, including supports for guide rail brackets.

C. Suitable connections from the power mains to controller or motor set starter, signal equipment feeders as required, including necessary circuit breakers and fused mainline disconnect switches.

D. Outlets at the center of the hoistway for lighting in the car. Electric power of the same characteristics as the permanent supply furnished without charge, for construction, testing and adjusting elevator equipment.

E. Cutting of walls, floors, etc., and removal of such obstructions as may be necessary for proper installation of the elevator. Setting of anchors and sleeves. Pockets or blockouts for signal fixtures.

F. All sill supports, including steel angles where required, and sill recesses and the grouting of door sills and hoistway frames after installation.

G. All painting, except as otherwise specified.

H. Provision of temporary enclosures and other protection from open hoistways during the time the elevator is being installed.

I. Trenching and backfilling for underground piping conduit.

J. Provision and connection of telephone within cabinet in elevator cab, and provision of a hoistway junction box for the communication wiring at approximately the vertical center of the hoistway.

1.3 SUBMITTALS

A. Shop Drawings and Samples: Before starting work, submit to the Architect for review, two sets of shop drawings, including wiring and piping diagrams.

1. After approval has been received, two corrected sets of the drawings shall be filed with the Contractor. Samples of all finish materials shall be submitted to Owner for selection and approval.

2. Shop drawings and engineering calculations (shown on the shop drawings) shall show rails and brackets meeting the state earthquake code.

B. Certificate of Installation: State operating certificates as required.

C. Service Manuals.

1.4 PERMITS AND INSPECTIONS

The Sub-Contractor shall obtain and pay for all necessary State and local permits and inspections required by the elevator inspection authority, and shall make such tests as are called for by the regulations of such authorities. These tests shall be made in the presence of the authorized representatives of such authorities.

1.5 TEMPORARY OPERATION

Should the service of the elevator be required before the final completion, the Contractor shall provide a temporary car enclosure, all necessary guards and protection for the hoistway openings, all main wiring, proper power to operate the car and signals, light in the car, and a qualified elevator operator.

1.6 SERVICE GUARANTEE

Warranty elevator work as follows:

A. Elevator Contractor shall warrant equipment installed by him against defects in materials and workmanship, and will correct defects in materials and workmanship and any defects not due to ordinary wear or tear or improper use or care, which may develop within one year from the date each elevator is completed and placed in operation.

B. This warranty is not intended to supplant normal maintenance service and shall not be construed to mean that the Elevator Contractor will provide free service for periodic examination, lubrication, or adjustment due to normal use, beyond that included in the specifications; nor will Elevator Contractor correct without charge,

breakage, maladjustments, or other trouble arising from abuse, misuse, improper or inadequate maintenance, or other causes beyond his control.

C. Period: 1 year from date of acceptance of project by Owner.

1.7 MAINTENANCE

A. Elevator Contractor shall furnish maintenance on the elevator provided under this contract for a period of one year at no additional cost to the Owner, commencing on the date the elevator is turned over for use by the owner.

B. All work shall be performed during regular working hours of regular working days and shall consist of the following: Regular examinations of the installation during normal maintenance service by competent and trained elevator servicemen. Examinations shall include necessary adjustments, greasing, oiling, and cleaning equipment, furnishing all necessary supplies and parts except such parts made necessary by misuse, accident or negligence not caused by the elevator installer.

C. Should trouble develop between regular examinations, the Owner shall promptly notify the elevator installer who shall make special examinations to correct the trouble.

1.8 PAINTING

All exposed metal work furnished under this section of the specifications, unless specified otherwise, shall be painted under this section.

1.9 RECORD DRAWINGS

The Contractor shall deliver to Architect reproducible drawings certified as "As-Built" for inclusion in the overall set of reduced size drawings which ultimately become record drawings.

1.10 MAINTENANCE MANUAL

Provide two maintenance manuals containing control wiring and power diagrams for the installed equipment. Manuals shall identify the product, the elevator manufacturer and shall be dated.

2. PRODUCTS

2.1 GENERAL FEATURES

A. Type: Oil Hydraulic passenger elevators Schindler Model 330A, or approved equal, and as specified herein.

B. Elevator Equipment Summary:

1.	Application:	Telescopic Holeless Dual Piston
2.	Service:	General Purpose Passenger
3.	Quantity:	1
4.	Capacity:	4000 lbs
5.	Speed:	100 fpm
6.	Travel:	38 feet 8 inches
7.	Landings:	5

8.	Front Openings:	4
9.	Rear Openings:	1
10.	Operation:	Microprocessor Single Car Automatic Operation
11.	Machine Room:	Adjacent to elevator hoistway
12.	Platform Size:	8'-0" wide x 6'-9" deep
13.	Door Type:	Single Speed Center Opening
14.	Guide Rails:	Equivalent to 16 lb. per foot
15.	Hoistway Entrances:	4'-0" wide x 7'-0" high doors
16.	Power Supply:	480 Volts 3 Phase 60 Hz [verify]
17.	Car Enclosure:	As specified Section 2.2.
18.	Signals:	Illuminated hall and car push buttons, Digital car position indicator, Hall lanterns with gongs and Tactile symbols, all meeting governing codes (including disabled)

C. Special Features:

Emergency lighting
Fireman's Emergency Operation
ADA Handicap Requirements
Handrail
Hoistway Access Switch
Hospital Emergency Service
Electronic Passenger Sensing
Alarm Bell
Stainless Steel Telephone compartment
Trail cables
Seismic Restraints
Automatic Failure Protection
Sill Support Angles
Sound Isolation
Emergency Manual Lowering
Viscosity Control
Owners Manual
Wiring Diagram
Telephone (ADA / CBC compliant).

D. Elevator Components:

Anti-stall feature.
Braille and audible signals.
Door open and close stall protection.
Independent service feature.
Infrared light curtain door protection.
Low oil return.
Overload sensors.
Phase protection.
Soft Start Electronic Starting
Locking Service Panel in Car Operating Panel.
Pressure Switch.
Remote Monitoring Capable.

2.2 ELEVATOR CABS

A. Height: 8'-0" from finished floor to underside of canopy.

B. Elevator Car Enclosure Wall Sections:
   1. Cab Wall: #4 stainless steel.

C. Base, Frieze, and Reveals: #4 stainless steel.

D. Ceiling:
1. Suspended with exposed frame with plastic lay-in panels.
2. Lighting: Fluorescent.

E. Cab Returns: Integral construction.
1. Finish: #4 stainless steel.

F. Transoms:
1. Run full width of cab.
2. Finish: #4 stainless steel.

G. Cab Doors:
1. Flush design both sides.
2. Rib construction.
3. Finish: #4 stainless steel.

H. Exhaust Fan:
1. Single speed.
2. Mount in cab transom or canopy.

I. Handrail:
1. 1/2" x 2" flat
2. Mount on rear wall.
3. Finish: #4 stainless steel.

J. Threshold: Aluminum.

K. Cab Finish Flooring: Raised Rubber Flooring raised disk pattern, as manufactured by Burke Flooring, Roppe, Johnsonite, Armstrong Corp. or approved equal;

Burke

http://www.burkeflooring.com/flooring/rouleau.html

Roppe

http://www.roppe.com/products/raiseddesign/index.html

2.3 HOISTWAY ENTRANCES

A. Hoistway Doors and Frames:
1. UL rated with required fire rating.
2. Doors: Rigid flush panel construction with sound-deadening material.
3. Frames: Securely fasten at corners to form unit frame. Frames shall be Bolted.

B. Exposed Areas of Corridor Frames: Baked enamel primer on all floors.

C. Doors: Baked enamel primer on all floors.

D. Sills: Aluminum on all floors.

2.4 CAB FIXTURES

A. Main Car Operating Panel:
1. Mount in return.
2. Comply with handicap requirements.
3. Include pushbuttons and illuminating indications for each floor served.
4. Emergency Buttons and Switches: Provide in accordance with code.
5. Switches for car light and accessories.

B. Cab Fixtures:
1. Car Lantern(s).
2. Digital Car Position Indicator.
3. Locking Service Panel in Car Operating Panel.
4. Telephone (ADA compliant).

2.5 HALL FIXTURES

A. Pushbuttons:
1. Up button and down button at intermediate floors.
2. Single button at each terminal floor.
3. Height: Comply with disabled requirements.

B. Hall Fixture Finish: Black lexan.

C. Fixture Cover Plates: Mount with tamper-resistant screws in same finish as fixture.

2.6 PROVISIONS FOR HANDICAPPED:

A. Car operating panel shall have braille symbols and marked arabic numerals corresponding to the numerals on the elevator buttons embossed immediately to the left thereof. Also braille symbols shall be embossed immediately to the left of the emergency stop and alarm buttons.

B. All door casings on all elevator floors shall have the number of the floor on which the casing is located embossed in braille symbols and marked arabic numbers on sides at a height of approximately 42 inches from the floor.

3. EXECUTION

3.1 EXAMINATION

A. Examine hoistways, hoistway openings, pits, and machine rooms before starting elevator installation.

B. Verify hoistway, pit, machine room, and openings are of correct size, within tolerances, and are ready for work of this section.

C. Verify walls and sill supports are plumb, where openings occur.

D. Verify hoistway is clear and plumb, with maximum variation of 1/2" at any point.

E. Verify minimum 2-hour fire-resistance rating of hatch walls.

F. Notify Architect in writing of dimensional discrepancies or other conditions detrimental to proper installation or performance of elevators.

G. Do not proceed with elevator installation until unsatisfactory conditions have been corrected in a manner acceptable to manufacturer/installer.

3.2 INSTALLATION

A. Install elevators in accordance with manufacturer/installer's instructions and ANSI/ASME A17.1.

B. Set entrances in vertical alignment with car openings, and aligned with plumb hoistway lines.

3.3 FIELD QUALITY CONTROL

A. Perform tests of elevator as required by ANSI/ASME A17.1 and governing codes.

3.4 ADJUSTING

A. Adjust elevators for proper operation in accordance with manufacturer/installer's instructions.

B. Adjust elevators for smooth acceleration and deceleration of car so not to cause passenger discomfort.

C. Adjust doors to prevent opening of doors at landing on corridor side, unless car is at rest at that landing, or is in leveling zone and stopping at that landing.

D. Adjust automatic floor leveling feature at each floor to within 1/4 inch of landing.

E. Repair minor damages to finish in accordance with manufacturer/installer's instructions and as approved by Architect.

F. Remove and replace damaged components that cannot be successfully repaired as determined by Architect.

3.5 CLEANING

A. Clean elevators promptly after installation in accordance with manufacturer/installer's instructions.

B. Do not use harsh cleaning materials or methods that could damage finish.

3.6 PROTECTION

A. Protect installed elevators from damage during construction.

END OF SECTION

BASIC MATERIALS AND METHODS - PLUMBING

SECTION 220500

PART 1 - GENERAL

1.1 APPLICABLE REQUIREMENTS

A. All work under this Section shall comply with the requirements of General Conditions, Supplemental Conditions, Special Conditions and Division 01 - General Requirements, and shall include all Plumbing Sections specified herein.

1.2 SCOPE OF THIS SECTION

A. All work to be furnished and installed under this Section shall comply with all the requirements of Division 01, and shall include, but not necessarily be limited to, the following:

1. Compliance with all codes and standards applicable to this jurisdiction.
2. Shop Drawings for Equipment
3. Coordination Documents
4. Record Drawings
5. Start-up Service and Building Commissioning
6. Instruction, Maintenance, and O & M Manuals
7. Work associated with Delivery, Storage, and Handling of products
8. Preparation of Posted Operating Instructions
9. Meeting Project Safety and Indemnity requirements
10. Proper Cleaning and Closing
11. Supplying proper Warranty information
12. Supply specified Guarantee documentation
13. Design and provision of Supports and Anchors
14. Identification Markers
15. Coordination of Electrical requirements for equipment provided

1.3 DESCRIPTION OF WORK

A. The Contract Documents, including Specifications and Construction Drawings, are intended to provide all material and labor to install complete plumbing systems for the building and shall interface with all existing building systems affected by new construction.

B. The Contractor shall refer to the architectural interior details, floor plans, elevations, and the structural and other Contract Drawings and he shall coordinate his work with that of the other trades to avoid interference. The plans are diagrammatic and show generally the locations of the fixtures, equipment, and pipe lines and are not to be scaled; all dimensions and existing conditions shall be checked at the building.

C. The Contractor shall comply with the project closeout requirements as detailed in General Requirements of Division 01.

D. Where project involves interface with existing building and site systems, every effort has been made to note existing utilities and services. However, the Contractor should thoroughly familiarize

themselves with existing conditions and be aware that in some cases information is not available as to concealed conditions, which exist in portions of the existing building affected by this work.

1.4 DESCRIPTION OF BID DOCUMENTS

A. Specifications:

1. Specifications, in general, describe quality and character of materials and equipment.
2. Specifications are of simplified form and include incomplete sentences.

B. Drawings:

1. Drawings in general are diagrammatic and indicate sizes, locations, connections to equipment and methods of installation.
2. Before proceeding with work check and verify all dimensions.
3. Assume all responsibility for fitting of materials and equipment to other parts of equipment and structure.
4. Make adjustments that may be necessary or requested, in order to resolve space problems, preserve headroom, and avoid architectural openings, structural members and work of other trades.
5. Where existing pipes, conduits and/or ducts prevent installation of new work as indicated, relocate, or arrange for relocation, of existing pipes, conduits and/or ducts. Verify exact location and elevation of existing piping prior to any construction.
6. If any part of Specifications or Drawings appears unclear or contradictory, apply to Architect or Engineer for his interpretation and decision as early as possible, including during bidding period.

1.5 DEFINITIONS

A. "Above Grade": Not buried in the ground and not embedded in concrete slab on ground.

B. "Actuating" or "Control" Devices: Automatic sensing and switching devices such as thermostats, pressure, float, electro-pneumatic switches and electrodes controlling operation of equipment.

C. "Below Grade": Buried in the ground or embedded in concrete slab on ground.

D. "Concealed": Embedded in masonry or other construction, installed in furred spaces, within double partitions or hung ceilings, in trenches, in crawl spaces, or in enclosures. In general, any item not visible or directly accessible.

E. "Connect": Complete hook-up of item with required service.

F. "Exposed": Not installed underground or "concealed."

G. "Furnish": To supply equipment and products as specified.

H. "Indicated," "Shown" or " "Noted": As indicated, shown or noted on Drawings or Specifications.

I. "Install": To erect, mount and connect complete with related accessories.

J. "Motor Controllers": Manual or magnetic starters (with or without switches), individual push buttons or hand-off-automatic (HOA) switches controlling the operation of motors.

K. "Piping": Pipe, tube, fittings, flanges, valves, controls, strainers, hangers, supports, unions, traps, drains, insulation, and related items.

L. "Provide": To supply, install and connect as specified for a complete, safe and operationally ready system.

M. "Reviewed," "Satisfactory" or "Directed": As reviewed, satisfactory, or directed by or to Architect/Engineer/Owner.

N. "Rough-In": Provide all indicated services in the necessary arrangement suitable for making final connections to fixture or equipment.

O. "Shall": An exhortation or command to complete the specified task.

P. "Similar" or "Equal": Of base bid manufacture, equal in materials, weight, size, design, and efficiency of specified products.

Q. "Supply": To purchase, procure, acquire and deliver complete with related accessories.

R. “Typical” or “Typ”: Exhibiting the qualities, traits, or characteristics that identify a kind, class, number, group or category. Of or relating to a representative specimen. Application shall apply to all other similarly identified on plan or detail.

S. "Will": A desire to complete the specified task. Allows some flexibility in application as opposed to "Shall."

T. "Wiring": Raceway, fittings, wire, boxes and related items.

U. "Work": Labor, materials, equipment, apparatus, controls, accessories, and other items required for proper and complete installation.

1.6 RELATED WORK SPECIFIED ELSEWHERE

A. All Division 22 Plumbing sections included herein.

B. Division 02: Coordinate with Civil Engineer

1. Coordination of excavation of trenches and the installation of mechanical systems and piping on site.

C. Division 03: Concrete.

1. All concrete work for Plumbing Division shall be included in Division 22 under the appropriate Sections and shall include:

a. Concrete curbs and housekeeping pads for the mechanical equipment.
b. Thrust blocks, pads, and boxes for mechanical equipment.
c. Coordination of floor drain and floor sink installations in sloped floors.

D. Division 07: Thermal and Moisture Protection.

1. Flashing and sheet metal.
2. Sealants and caulking.

3. Firestopping.

E. Division 09: Finishes:

1. Division 22 installers shall perform all painting, except where specifically stated otherwise in Division 09.
2. Painting of all exposed steel, piping, insulation, equipment and materials.
3. Paint all exposed gas piping, interior and exterior to the building, yellow.

F. Division 26: Electrical is related to work of:

1. Power connections to all plumbing equipment.
2. Life safety provisions.

1.7 CODES AND STANDARDS

A. The Contractor is cautioned that code requirements not explicitly detailed in these specifications or drawings, but which may be reasonably inferred or implied from the nature of the project, must be provided as part of the contract.

B. Perform all tests required by governing authorities and required under all Division 22 Sections. Provide written reports on all tests.

C. Electrical devices and wiring shall conform to the latest standards of NEC; all devices shall be UL listed and labeled.

D. All plumbing work shall comply with the Americans with Disabilities Act (ADA).

E. All excavation work must comply with all provisions of state laws including notification to all owners of underground utilities at least 48 business day hours, but not more than 10 business days, before commencing an excavation.

F. Provide in accordance with rules and regulations of the following:

1. Building Codes enforced by the Authority Having Jurisdiction in California:

a. 2010 Building Standards Administrative Code, Part 1, Title 24 C.C.R.
b. 2010 California Building Code (CBC), Part 2, Title 24 C.C.R.
(2009 International Building Code and 2010 California Amendments)

c. 2010 California Electrical Code (CEC), Part 3, Title 24 C.C.R.
(2008 National Electrical Code and 2010 California Amendments)

d. 2010 California Mechanical Code (CMC) Part 4, Title 24 C.C.R
2009 Uniform Mechanical Code and 2010 California Amendments)

e. 2010 California Plumbing Code (CPC), Part 5, Title 24 C.C.R.
(2009 Uniform Plumbing Code and 2010 California Amendments)

f. 2010 California Energy Code (CEC), Part 6, Title 24 C.C.R.
g. 2010 California Fire Code, Part 9, Title 24 C.C.R.

(2009 International Fire Code and 2010 California Amendments

h. 2010 California Green building Standards Code (CALGreen), Part 11, Title 24 C.C.R.
i. 2010 California Referenced Standards, Part 12, Title 24 C.C.R.
j. Title 19 C.C.R. Public Safety, State Fire Marshal Regulations.

2. Local, city, county and state codes and ordinances.
3. Local Bureau of Buildings.
4. Local Health Department.
5. Local and State Fire Prevention Districts.
6. California administrative Code title 24.

G. Provide in accordance with appropriate referenced standards of the following:

1. NFPA - National Fire Protection Association.
2. CSA - Canadian Standards Association.
3. ANSI - American National Standards Institute.
4. ASHRAE - American Society of Heating, Refrigerating & Air Conditioning Engineers.
5. ASME - American Society of Mechanical Engineers.
6. ASTM - American Society for Testing Materials.
7. AWS - American Welding Society.
8. AWWA - American Water Works Association.
9. FM - Factory Mutual.
10. MSS - Manufacturer's Standardization Society.
11. NEMA - National Electrical Manufacturer's Association.
12. UL - Underwriter's Laboratories.
13. ADA - Americans with Disabilities Act.
14. ETL - Electrical Testing Laboratories.
15. ASSE - American Society of Sanitary Engineers.
16. PDI - Plumbing and Drainage Institute.
17. IAPMO - International Association of Plumbing and Mechanical Officials.
18. CISPI - Cast Iron Soil Pipe Institute.

1.8 QUALITY ASSURANCE

A. Manufacturer's Nameplates: Nameplates on manufactured items shall be aluminum or Type 304 stainless steel sheet, not less than 20 USG (0.0375”), riveted or bolted to the manufactured item, with nameplate data engraved or punched to form a non-erasable record of equipment data.

B. Current Models. All work shall be as follows:

1. Manufactured items furnished shall be the current, cataloged product of the manufacturer.
2. Replacement parts shall be readily available and stocked in the USA.

C. Experience: Unless more stringent requirements are specified in other sections of Division 22, manufactured items shall have been installed and used, without modification, renovation or repair, on other projects for not less than one year prior to the date of bidding for this project.

1.9 GENERAL REQUIREMENTS

A. Examine all existing conditions at building site.

B. Review contract documents and technical specifications for extent of new work to be provided.

C. Provide and pay for all permits, licenses, fees and inspections.

D. Install equipment and materials to provide required access for servicing and maintenance. Coordinate the final location of concealed equipment and devices requiring access with final location of required access panels and doors. Allow ample space for removal of all parts that require replacement or servicing. This work shall include furnishing and installing all access doors required for mechanical access.

E. Verify final locations for rough-ins with field measurements and with the requirements of the actual equipment to be connected. Refer to Equipment Specifications in Divisions 02 through 48 for rough-in requirements.

F. Coordinate mechanical equipment and materials installation with other building components.

G. Verify all dimensions by field measurements.

H. Arrange for chases, slots, and openings in other building components to allow for plumbing installations.

I. Coordinate the installation of required supporting devices and sleeves to be set in poured-in-place concrete and other structural components, as they are constructed.

J. Sequence, coordinate, and integrate installations of mechanical materials and equipment for efficient flow of the work. Give particular attention to large equipment requiring positioning prior to closing-in the building.

K. Coordinate the cutting and patching of building components to accommodate the installation of mechanical equipment and materials. Contractor to provide for all cutting and patching required for installation of his work unless otherwise noted.

L. Where mounting heights are not detailed or dimensioned, install plumbing services and overhead equipment to provide the maximum headroom possible.

M. Install plumbing equipment to facilitate maintenance and repair or replacement of equipment components. Connect equipment for ease of disconnecting, without interference with other installations.

N. Coordinate the installation of plumbing materials and equipment above ceilings with ductwork, piping, conduits, suspension system, light fixtures, cable trays, sprinkler piping and heads, and other installations.

O. Coordinate connection of plumbing systems with exterior underground and overhead utilities and services. Comply with requirements of governing regulations, franchised service companies, and controlling agencies. Provide required connection for each service.

P. Coordinate with Owner in advance to schedule shutdown of existing systems to make new connections. Provide valves in new piping to allow existing system to be put back in service with minimum down time.

Q. All materials (such as insulation, piping, wiring, controls, etc.) located within air plenum spaces, air shafts, and occupied spaces shall have a flame-spread index of 25 or less, and smoke-developed index of 50 or less, as tested by ASTM E84 (NFPA 255) Method. In addition, the products, when tested, shall not drip flame particles, and flame shall not be progressive. Provide Underwriters

Laboratories, Inc., label or listing, or satisfactory certified test report from an approved testing laboratory to prove the fire hazard ratings for materials proposed for use do not exceed those specified.

R. Coordinate installation of floor drains and floor sinks with work of other trades, such that finished floor slopes to drains and floor sinks are flush with surrounding floor.

S. Products made of or containing lead, asbestos, mercury or other known toxic or hazardous materials are not acceptable for installation under this Division. Any such products installed as part of the work of the Division shall be removed and replaced and all costs for removal and replacement shall be borne solely by the installing Contractor.

1.10 MINOR DEVIATIONS

A. The Drawings are diagrammatic and show the general arrangements of all plumbing work and requirements to be performed. It is not intended to show or indicate all offsets, fittings, and accessories which will be required as a part of the work of this Section.

B. The Contractor shall review the structural and architectural conditions affecting his work. It is the specific intention of this section that the contractor's scope of work shall include

1. Proper code complying support systems for all equipment whether or not scheduled or detailed on drawings or in these specifications
2. Minor deviations from the mechanical plans required by architectural and structural coordination.

C. The Contractor shall study the operational requirements of each system, and shall arrange his work accordingly, and shall furnish such fittings, offsets, supports, accessories, as are required for the proper and efficient installation of all systems from the physical space available for use by this section. This requirement extends to the Contractor's coordination of this section's work with the "Electrical Work." Should conflicts occur due to lack of coordination, the time delay, cost of rectification, demolition, labor and materials, shall be borne by the Contractor and shall not be at a cost to the Owner.

D. Minor deviations in order to avoid conflict shall be permitted where the design intent is not altered.

E. Advise the Architect, in writing, in the event a conflict occurs in the location or connection of equipment. Bear all costs for relocation of equipment, resulting from failure to properly coordinate the installation or failure to advise the Architect of conflict.

1.11 PRODUCT SUBSTITUTIONS

A. The Contractor shall certify the following items are correct when using substituted products other than those scheduled or shown on the drawings as a basis of design:

1. The proposed substitution does not affect dimensions shown on drawings.
2. The Contractor shall pay for changes to building design, including engineering design, detailing, structural supports, and construction costs caused by proposed substitution.
3. The proposed substitution has no adverse effect on other trades, construction schedule, or specified warranty requirements.
4. Maintenance and service parts available locally are readily obtainable for the proposed substitute.

B. The Contractor further certifies function, appearance, and quality of proposed substitution are equivalent or superior to specified item.

C. The Contractor agrees that the terms and conditions for the substituted product that are found in the contract documents apply to this proposed substitution.

1.12 SHOP DRAWINGS AND EQUIPMENT SUBMITTALS

A. Prior to construction submit for review all materials and equipment in accordance with Division 01 requirements.

B. After approval of preliminary list of materials, the Contractor shall submit Shop Drawings and manufacturer's Certified Drawings to the Architect for approval.

C. The Contractor shall submit approved Shop Drawings and manufacturer's equipment cuts, of all equipment requiring connection by Division 26, to the Electrical Contractor for final coordination of electrical requirements. Contractor shall bear all additional costs for failure to coordinate with Division 26.

D. Submittals and Shop Drawings shall be submitted as a complete package bound in a 3-ring binder with tabs for each specification section. The approved submittals shall be converted into Operations & Maintenance Manuals at the completion of the project. Submit six (6) typed copies of submittals. Refer to Division 01 for additional requirements.

1.13 UNIT PRICING SUBMITTALS

A. Prior to construction submit for review all materials and equipment in accordance with Division 01 requirements.

B. Preliminary List of Materials and Unit Price Items: Within thirty (30) days after awarding of the Contract, submit to architect for preliminary approval a complete list of manufacturer’s names and model numbers of proposed materials and equipment. Also include proposed list of unit price items for review.

1. Indicate substituted items.
2. Identify test and balancing agency.
3. Identify independent testing laboratory for water analysis.

C. The Contractor shall submit with preliminary list of materials a unit price list for each item furnished on this project. Included with price shall be labor cost index.

D. Submittals and Shop Drawings shall be submitted as a complete package bound in a 3-ring binder with tabs for each specification section. Submit six (6) typed copies of submittals. Refer to Division 01 for additional requirements.

1.14 COORDINATION DOCUMENTS

A. The Contractors shall prepare coordinated Shop Drawings to coordinate the installation and location of all piping and all system appurtenances with other trades. The Drawings shall include all mechanical rooms and floor plans. The Drawings shall be Overlay Drawings showing each discipline on a single sheet. The Drawings shall be keyed to the structural column identification system, and shall be progressively numbered. Prior to completion of the Drawings, the Contractor shall

coordinate the proposed installation with the Architect and the structural requirements, and all other trades (including HVAC, Fire Protection, Electrical, Ceiling Suspension, and Tile Systems), and provide reasonable maintenance access requirements. When conflicts are identified, modify system layout as necessary to resolve. Do not fabricate, order or install any equipment or materials until coordination documents are approved by the General Contractor, Architect, and Owner. Within thirty (30) days after award of Contract, submit proposed coordination document Shop Drawing schedule, allowing adequate time for review and approval by parties mentioned above. Drawings should be prepared and submitted for approval on a floor-by-floor basis to phase with building construction.

B. The Drawings shall be prepared as follows:

1. The Sheet Metal (Mechanical) Contractor shall prepare Drawings to an accurate scale of 1/4" = 1'-0" or larger, on reproducible media sheets (vellum) or AutoCAD disks. Obtain reproducibles or AutoCAD files of the HVAC design from the Architect, or Engineer, at cost plus. Drawings are to be same size as Contract Drawings and shall indicate location, size and elevation above finished floor, of all HVAC equipment, ductwork, and piping.
2. The Plumbing Contractor shall obtain reproducible plans or AutoCAD disks from the Mechanical Contractor, and indicate all plumbing lines including fittings, hangers, access panels, valves, and bottom of pipe elevations above finished floor.
3. The Fire Protection Contractor shall obtain reproducible plans or AutoCAD disks with the detailed mechanical and plumbing work shown. The Sprinkler Contractor shall indicate location of all sprinkler heads and piping, including valves and fittings, dimensions from column lines, and bottom of pipe elevations above finished floor.
4. Plans are to incorporate all addenda items and change orders.
5. Distribute plans to all trades and provide additional coordination as needed.

C. Advise the Architect in the event a conflict occurs in the location or connection of equipment. Bear all costs for relocation of equipment, resulting from failure to properly coordinate the installation or failure to advise the Architect of conflict.

D. Provide means of access to all valves, controllers, operable devices, and other apparatus that may require adjustment or servicing.

E. Verify in field exact size, location, invert, and clearances regarding all existing material, equipment and apparatus, and advise the Architect of any discrepancies between those indicated on the Drawings and those existing in the field prior to any installation related thereto.

F. Final Coordination Drawings with all appropriate information added are to be submitted as Record Drawings at completion of project.

G. Provide copy of Record Drawings to Testing and Balancing Contractor for their use when doing their work.

1.15 RECORD DRAWINGS

A. Before commencing installation, obtain an extra set of prints from Architect, marked "Record." Keep this set of Drawings at the job site at all times, and use it for no other purpose but to mark on it all the changes and revisions to the Contract Drawings resulting from coordination with other trades. At the completion of the project edit project AutoCAD files to incorporate all site markups, changes, and revisions to the Contract Drawings. Submit plots of Record Drawings and six copies CD Roms labeled with all record AutoCAD drawing files.

B. Mark Drawings to indicate revisions to piping, size, and location both exterior and interior; including locations of other control devices, valves, and similar units requiring periodic maintenance or repair;

actual equipment locations, dimensioned from column lines; actual inverts and locations of underground piping; concealed equipment, dimensioned to column lines; mains and branches of piping systems, with valves and control devices located and numbered, concealed unions located, and with items requiring maintenance located (i.e. – valves, traps, strainers, expansion compensators, tanks, etc.); Change Orders; concealed control system devices.

C. Mark Specifications to indicate approved substitutions; Change Orders; actual equipment and materials used.

D. Refer also to Special Conditions in Division 01 for full scope of requirements.

1.16 INSTRUCTION, MAINTENANCE, AND O&M MANUALS

A. O&M Manuals: Upon completion of the work, the Contractor shall submit to the Architect complete set of operating instructions, maintenance instructions, part lists, and all other bulletins and brochures pertinent to the operation and maintenance for equipment furnished and installed as specified in this section, bound in a durable binder. Refer to Division 01.

B. The Contractor shall be responsible for proper instruction of Owner's personnel for operation and maintenance of equipment, and apparatus installed as specified in Division 22 to be no less than 2 hours for each piece of equipment.

1.17 DELIVERY, STORAGE AND HANDLING

A. Deliver products to project properly identified with names, model numbers, types, grades, compliance labels, and similar information needed for distinct identifications; adequately packaged and protected to prevent damage during shipment, storage, and handling.

B. Store equipment and materials in an environmentally controlled area at the site, unless off-site storage is authorized in writing. Protect stored equipment and materials from damage. Piping shall be stored in bundles covered with visqueen. Piping showing signs of rust shall be removed from site and replaced.

C. Coordinate deliveries of mechanical materials and equipment to minimize construction site congestion. Limit each shipment of materials and equipment to the items and quantities needed for the smooth and efficient flow of installations.

1.18 POSTED OPERATING INSTRUCTIONS

A. Furnish approved operating instructions for systems and equipment indicated in the technical sections for use by operation personnel. The operating instructions shall include wiring diagrams, control diagrams, and control sequence for each principal system and equipment. Print or engrave operating instructions and frame under glass or in approved laminated plastic. Post instructions where directed. Attach or post operating instructions adjacent to each principal system and equipment including start-up, operating, shutdown, safety precautions and procedure in the event of equipment failure. Provide weather-resistant materials or weatherproof enclosures for operating instructions exposed to the weather. Operating instructions shall not fade when exposed to sunlight and shall be secured to prevent easy removal.

1.19 SAFETY AND INDEMNITY

A. The Contractor shall be solely and completely responsible for conditions of the job site including safety of all persons and property during performance of the work. This requirement will apply continuously and not be limited to normal hours of work.

B. No act, service, Drawing, review, or Construction Review by the Owner, Architect, the Engineers or their consultants, is intended to include the review of the adequacy of the Contractor's safety measures, in, on, or near the construction site.

C. The Contractor performing work under this Division of the Specifications shall hold harmless, indemnify and defend the Owner, the Architect, the Engineers and their consultants, and each of their officers, employees and agents from any and all liability claim, losses or damage arising, or alleged to arise from bodily injury, sickness, or death of a person or persons, and for all damages arising out of injury to or destruction of property arising directly or indirectly out of, or in connection with, the performance of the work under the Division of the Specifications, and from the Contractor's negligence in the performance of the work described in the Construction Contract Documents; but not including the sole negligence of the Owner, the Architect, the Engineers, and their consultants or their officers, employees and agents.

1.20 CLEANING AND CLOSING

A. All work shall be inspected, tested, and approved before being concealed or placed in operation.

B. Upon completion of the work, all equipment installed as specified in this section, and all areas where work was performed, shall be cleaned to provide operating conditions satisfactory to the Architect.

1.21 WARRANTIES

A. All equipment shall be provided with a minimum one-year warranty to include parts and labor. Refer to individual Equipment Specifications for extended or longer-term warranty requirements.

B. Provide complete warranty information for each item, to include product or equipment, date of beginning of warranty or bond; duration of warranty or bond; and names, addresses, telephone numbers and procedures for filing a claim and obtaining warranty services.

C. Service during warranty period: Contractor shall provide maintenance as specified elsewhere during the 12-month warranty period.

1.22 GUARANTEE

A. The Contractor shall guarantee and service all workmanship and materials to be as represented by him and shall repair or replace, at no additional cost to the Owner, any part thereof which may become defective within the period of one (1) year after the Date of Final Acceptance, ordinary wear and tear excepted.

B. Contractor shall be responsible for and pay for any damages caused by or resulting from defects in his work.

PART 2 - PRODUCTS

2.1 GENERAL

A. Furnish and install all new material, equipment, and apparatus hereinafter specified unless specifically noted otherwise. All material, equipment, and apparatus shall be identified by the manufacturer's name, nameplate, and pertinent data.

B. All materials, equipment, and apparatus are mentioned as standards unless noted otherwise. The words "or approved equal" shall be considered to be subsequent to all manufacturers' names used herein, unless specifically noted that substitutes are not allowed.

2.2 SUPPORTS AND ANCHORS

A. General: Comply with applicable codes pertaining to product materials and installation of supports and anchors, including, but not limited to, the following:

1. UL and FM Compliance: Provide products, which are UL listed and FM approved.
2. ASCE 7-05: "Amercian Society of Civil Engineers."
3. 2006 International Building Code (IBC)
4. MSS Standard Compliance: Manufacturer's Standardization Society (MSS).
5. SMACNA: "Seismic Restraint Manual: Guidelines for Mechanical Systems."
6. Provide copper plated or plastic coated supports and attachment for copper piping systems. Field applied coatings or tape is unacceptable.
7. Manufacturer: B-Line, Grinnell, Michigan, Tolco, Kin-Line, Simpson, or Superstrut.

B. Horizontal Piping Hangers and Supports: Except as otherwise indicated, provide factory-fabricated hangers and supports of one of the following MSS types listed.

1. Adjustable Steel Clevis Hangers: MSS Type 1.
2. Adjustable Steel Swivel Band Hangers: MSS Type 10.
3. U-Bolts: MSS Type 24.
4. Pipe Slides and Slide Plates: MSS Type 35, including one of the following plate types:

   a. Plate: Unguided type.
   b. Plate: Guided type.
   c. Plate: Hold-down clamp type.

5. Pipe Saddle Supports: MSS Type 36, including steel pipe base support and cast iron floor flange.
6. Pipe Saddle Supports with U-Bolt: MSS Type 37, including steel pipe base support and cast iron floor flange.
7. Adjustable Pipe Saddle Supports: MSS Type 38, including steel pipe base support and cast iron floor flange.

C. Horizontal Cushioned Pipe Clamp: Where pipe hangers are called out to absorb vibration or shock install a piping clamp with thermoplastic elastomer insert. Cush-A-Clamp or equal.

D. Vertical Piping Clamps: Provide factory-fabricated two-bolt vertical piping riser clamps, MSS Type 8.

E. Hanger-Rod Attachments: Except as otherwise indicated, provide factory-fabricated hanger-rod attachments of one of the following MSS types listed.

1. Steel Turnbuckles: MSS Type 13.
2. Steel Clevises: MSS Type 14.
3. Swivel Turnbuckles: MSS Type 15.
4. Malleable Iron Eye Sockets: MSS Type 16.
5. Steel Weldless Eye Nuts: MSS Type 17.

F. Building Attachments: Except as otherwise indicated, provide factory-fabricated building attachments of one of the following types listed.

1. Concrete Inserts: MSS Type 18 or Blue Banger Hanger by Simpson
2. Steel Brackets: One of the following for indicated loading:

   a. Light Duty: MSS Type 31.
   b. Medium Duty: MSS Type 32.
   c. Heavy Duty: MSS Type 33.

3. Horizontal Travelers: MSS Type 58.
4. Internally Threaded Expansion Shell Anchors: By Simpson or approved equal.
5. Concrete Screw Anchors: Titen HD by Simpson or approved equal.

G. Saddles and Shields: Except as otherwise indicated, provide saddles or shields under piping hangers and supports, factory-fabricated, for all insulated piping. Size saddles and shields for exact fit to mate with pipe insulation.

1. Pipe Covering Protection Saddles: MSS Type 39; fill interior voids with segments of insulation matching adjoining insulation.
2. Insulation Protection Shields: MSS Type 40, 18” minimum, or of the length recommended by manufacturer to prevent crushing of insulation. High-density insulation insert lengths shall match or exceed shield length.
3. Thermal Hanger Shields: Constructed of 360° insert of waterproofed calcium silicate (60 psi flexural strength minimum) encased in 360° sheet metal shield. Provide assembly of same thickness as adjoining insulation. Shield length shall match or exceed length of calcium silicate insert. Alternately Polyisocyanurate Urethane with a minimum flexural strength of 60psi, fully encased in 360 PVC (1.524 mm thick)SNAPPITZ. Provide assembly of same thickness as adjoining insulation.
4. Thermal Hanger Couplings: Constructed of high strength plastic coupling to retain tubing and join insulation at clevis hangers and strut-mounted clamps. Klo-Shure Insulation Coupling or equal.

H. Miscellaneous Materials:

1. Metal Framing: Provide products complying with NEMA STD ML1.
2. Steel Plates, Shapes, and Bars: Provide products complying with ASTM A36.
3. Cement Grout: Portland Cement (ASTM C150, Type I or Type III) and clean uniformly graded, natural sand (ASTM C404, Size No. 2). Mix at a ratio of 1.0 part cement to 3.0 parts sand by volume, with minimum amount of water required for placement and hydration.
4. Heavy-Duty Steel Trapezes: Fabricate from steel shapes selected for loads required. Weld steel in accordance with AWS standards.
5. Pipe Brackets: "HoldRite" copper plated brackets. Insulate brackets attached to metal studs with felt.

2.3 IDENTIFICATION MARKERS

A. Mechanical Identification Materials: Provide products of categories and types required for each application as referenced in other Division 22 Sections. Where more than single type is specified for application, selection is installer's option, but provide single selection for each product category. Stencils are not acceptable.

B. Plastic Pipe Markers:

1. Snap-On Type: Provide pre-printed, semi-rigid snap-on, color coded pipe markers, complying with ANSI A13.1.
2. Pressure Sensitive Type: Provide pre-printed, permanent adhesive, color coded, pressure sensitive vinyl pipe markers, complying with ANSI A13.1. Secure both ends of markers with color coded adhesive vinyl tape.
3. Insulation: Furnish 1” thick molded fiberglass insulation with jacket for each plastic pipe marker to be installed on uninsulated pipes subjected to fluid temperatures of 125°F (52°C) or greater. Cut length to extend 2” beyond each end of plastic pipe marker.
4. Arrows: Print each pipe marker with arrows indicating direction of flow, either integrally with piping system service lettering (to accommodate both directions), or as separate unit of plastic.

C. Underground-Type Plastic Line Markers: Provide 6” wide x 4 mils thick multi-ply tape, consisting of solid metallic foil core between 2 layers of plastic tape. Markers to be permanent, bright colored, continuous printed, intended for direct burial service.

D. Valve Tags:

1. Brass Valve Tags: Provide 1 1/2" diameter 19-gauge polished brass valve tags with stamp-engraved piping system abbreviation in 1/4” high letters and sequenced valve numbers 1/2” high, and with 5/32” hole for fastener. Fill tag engraving with black enamel.
2. Plastic Laminate Valve Tags: Provide 3/32” thick engraved plastic laminate valve tags, with piping system abbreviations in 1/4" high letters and sequenced valve number 1/2" high, and with 5/32” hole for fasteners.
3. Valve Tag Fasteners: Provide solid brass chain (wire link or beaded type), or solid brass S-hooks of the sizes required for proper attachment of tags to valves, and manufactured specifically for that purpose.
4. Access Panel Markers: Provide 1/16” thick engraved plastic laminate access panel markers, with abbreviations and numbers corresponding to concealed valve. Include 1/8” center hole to allow attachment.
5. Non-potable Water Tags: 1/16” thick, engraved, plastic tags as indicated on Drawings.

E. Plastic Equipment Signs:

1. Provide 4-1/2” x 6” plastic laminate sign, ANSI A.13 color coded with engraved white core lettering.
2. Fasteners: Self-tapping stainless steel screws, except contact-type permanent adhesive where screws cannot or should not penetrate the substrate.
3. Nomenclature: Include the following, matching terminology on schedules as closely as possible:

    a. Name and plan number.
    b. Equipment service.
    c. Design capacity.
    d. Other design parameters, such as pressure drop, entering and leaving conditions, rpm, etc.

F. Acceptable Manufacturers: Craftmark, Seton, Brady, Marking Services, Inc., or Brimar.

2.4 ELECTRICAL

A. General:

1. All electrical material, equipment, and apparatus specified herein shall conform to the requirements of Division 26.

B. Quality Assurance:

1. Electrical components and materials shall be UL or ETL listed/labeled as suitable for location and use - no exceptions.

PART 3 - EXECUTION

3.1 GENERAL

A. Workmanship shall be performed by licensed journeymen or master mechanics and shall result in an installation consistent with the best practices of trades.

B. Install work uniform, level and plumb, in relationship to lines of building. Do not install any diagonal, or otherwise irregular work unless so indicated on Drawings or approved by Architect.

3.2 MANUFACTURER'S DIRECTIONS

A. Follow manufacturers' directions and recommendations in all cases where the manufacturers of articles used on this Contract furnish directions covering points not shown on the Drawings or covered in these Specifications.

3.3 INSTALLATION

A. Coordinate the work between the various Plumbing Sections and with the work specified under other Divisions. If any cooperative work must be altered due to lack of proper supervision or failure to make proper and timely provisions, the alternations shall be made to the satisfaction of the Engineer and at the Contractor’s cost.

B. Inspect all material, equipment, and apparatus upon delivery and do not install any damaged or defected materials.

3.4 SUPPORTS AND HANGERS

A. Prior to installation of hangers, supports, anchors, and associated work, installer shall meet at project site with Contractor, installer of each component of associated work, inspection and testing agency representatives, (if any), installers of other work with requirements specified.

B. Installation of Building Attachments: Install building attachments at required locations within concrete or on structural steel for proper piping support. Install additional building attachments where support

is required for additional concentrated loads, including valves, flanges, guides, strainers, expansion joints, and at changes in direction of piping. Install concrete inserts before concrete is placed. Fasten insert securely to forms. Where concrete with compressive strength less than 2,500 psi is indicated, install reinforcing bars through opening at top of inserts.

C. Proceed with installation of hangers, supports, and anchors only after required building structural work has been completed in areas where the work is to be installed. Correct inadequacies including, but not limited to, proper placement of inserts, anchors, and other building structural attachments.

D. Install hangers, supports, clamps, and attachments to support piping properly from building structure. Arrange for grouping of parallel runs of horizontal piping to be supported together on trapeze type hangers where possible. Where piping of various sizes is to be supported together by trapeze hangers, space hangers for smallest pipe size or install intermediate supports for smaller diameter pipe. Do not use wire or perforated metal to support piping, and do not support piping from other piping.

E. Install hangers within 12 inches of every change in piping direction, end of pipe run or concentrated load, and within 36 inches of every major piece of equipment. Hangers shall be installed on both sides of flexible connections. Where flexible connection connects directly to a piece of equipment only one hanger is required.

F. Install hangers and supports complete with necessary inserts, bolts, rods, nuts, washers, and other accessories. Except as otherwise indicated for exposed continuous pipe runs, install hangers and supports of same type and style as installed for adjacent similar piping.

G. Support gas independently of other piping.

H. Prevent electrolysis in support of copper tubing by use of hangers and supports which are copper plated, or by other recognized industry methods.

I. Hanger Spacing in accordance with following minimum schedules (other spacings and rod sizes may be used in accordance with the SMACNA Seismic Restraint Manual using a safety factor of five):

1. Steel Pipe (Gas/Air Filled):

Pipe Size	Max. Hanger Spacing	Rod Size
1/2" to 1 1/4"	6 feet	3/8"
1 ½" and larger	10 feet	1/2"

2. Copper Pipe:

Pipe Size	Max. Hanger Spacing	Rod Size
1/2" to 2"	6 feet	3/8"
2 ½" and larger	8 feet	1/2"

J. Sloping, Air Venting, and Draining:

1. Slope all piping as specified and as indicated, true to line and grade, and free of traps and air pockets. Unless indicated otherwise, slope piping in the direction of flow as follows:

Service	Inclination	Slope
Domestic Water	Down	1" per 100'
Soil and Waste	Down	1/4" per foot
Storm Water	Down	1/4" per foot
Sanitary Vent	Up (towards roof terminal)	1/4" per foot

2. Slope all compressed air branch piping down toward main risers at 1” per 10’.

3. Provide eccentric reducers in horizontal piping for all sizing changes.
4. Provide drain valves and hose adapters at all low points in piping.

K. Provisions for Movement:

1. Install hangers and supports to allow controlled movement of piping systems and to permit freedom of movement between pipe anchors, and to facilitate action of expansion joints, expansion loops, expansion bends, and similar units.
2. Load Distribution: Install hangers and supports so that piping live and dead loading and stresses from movement will not be transmitted to connecting equipment.
3. Insulated Piping: Comply with the following installation requirements:

   a. Clamps: Attach clamps, including spacers, (if any), to piping with clamps projecting through insulation.
   b. Shields: Where low compressive strength insulation or vapor barriers are indicated on cold water piping, install shields or inserts.
   c. Saddles: Where insulation without vapor barrier is indicated install protection saddles.

L. Installation of Anchors:

1. Install anchors at proper locations to prevent excessive stresses and to prevent transfer of loading and stresses to connected equipment.
2. Fabricate and install anchor by welding steel shapes, plates and bars to piping and to structure.
3. Where expansion compensators are indicated, install anchors in accordance with expansion unit manufacturer's written instructions, to limit movement of piping and forces to maximums recommended by manufacturer for each unit.
4. Anchor Spacings: Where not otherwise indicated, install anchors at ends of principal pipe runs, at intermediate points in pipe runs between expansion loops and bends.

M. Equipment Supports:

1. Provide all concrete bases, unless otherwise furnished as work of Division 03. Furnish to Division 03 Contractor scaled layouts of all required bases, with dimensions of bases, and location to column centerlines. Furnish templates, anchor bolts, and accessories necessary for base construction.
2. Provide structural steel stands to support equipment not floor mounted or hung from structure. Construct of structural steel members or steel pipe and fittings. Provide factory-fabricated tank saddles for tanks.

N. Adjusting:

1. Hanger Adjustment: Adjust hangers so as to distribute loads equally on attachments.
2. Support Adjustment: Provide grout under supports so as to bring piping and equipment to proper level and elevations.
3. Clean factory-finished surfaces. Repair any marred or scratched surfaces with manufacturer's touch-up paint.

3.5 ELECTRICAL REQUIREMENTS

A. Plumbing Contractor shall coordinate with Division 26 work to provide complete systems as required to operate all mechanical devices installed under this Division of work.

B. Installation of Electrical Connections: Furnish, install, and wire (except as may be otherwise indicated) all plumbing, motors and controls in accordance with the following schedule and in accordance with equipment manufacturer's written instructions and with recognized industry practices, and complying with applicable requirements of UL, NEC, and NECA's "Standard of Installation" to ensure that products fulfill requirements. Carefully coordinate with work performed under the Mechanical Division of these Specifications.

1. Coordinate with other work, including wires/cables, raceway and equipment installation, as necessary to properly interface installation of electrical connections for equipment with other work.

3.6 PAINTING

A. All painting shall be provided under this Division work, unless otherwise specified under Section 099100: Painting. Painting schemes shall comply with ANSI A13.1. Paint all exposed materials such as piping, equipment, insulation, steel, etc. Exposed gas piping inside and outside the building shall be painted with two coats of "Rust-O-Leum" Yellow. Exposed copper indirect waste piping serving food service equipment shall be painted metallic chrome.

B. All exposed work under Division 22 shall receive either a factory finish or a field prime coat finish, except:

1. Exposed copper piping.
2. Aluminum jacketed outdoor insulated piping.

3.7 IDENTIFICATION MARKERS

A. General: Where identification is to be applied to surfaces which require insulation, painting, or other covering or finish, including valve tags in finished mechanical spaces, install identification after completion of covering and painting. Install identification prior to installation of acoustical ceilings and similar removable concealment.

B. Piping System Identification:

1. Install pipe markers on each system indicated to receive identification, and include arrows to show normal direction of flow.
2. Locate pipe markers as follows:

a. Near each valve and control device.
b. Near each branch, excluding short take-offs for fixtures mark each pipe at branch, where there could be question of flow pattern.
c. Near locations where pipes pass through walls or floors/ceilings, or enter non-accessible enclosures.
d. At access doors, manholes, and similar access points which permit view of concealed piping.
e. Near major equipment items and other points of origination and termination.
f. Spaced horizontally at maximum spacing of 20' along each piping run, with minimum of one in each room. Vertically spaced at each story transversed.

C. Underground Piping Identification: During backfilling/topsoiling of each exterior underground piping system, install continuous underground-type plastic line marker, located directly over buried line at 6"

to 8” below finished grade. Where multiple small lines are buried in common trench and do not exceed overall width of 16”, install single line marker.

D. Plumbing Equipment Identification: Locate engraved plastic laminate signs on or near each major item of plumbing equipment and each operational device. Provide signs for the following:

1. Main control and operating valves, including safety devices.
2. Meters, gauges, thermometers, and similar units.
3. Strainers, filters, treatment systems and similar equipment.

E. Text of Signs: In addition to name of identified unit, provide lettering to distinguish between multiple units, inform operator of operational requirements, indicate safety and emergency precautions, and warn of hazards and improper operations. Equipment signs shall include an identification of the area or other equipment served by the equipment being labeled.

3.8 TESTING

A. Provide all tests specified hereinafter and as otherwise required. Provide all test equipment, including test pumps, gauges, instruments, and other equipment required. Test all rotational equipment for proper direction of rotation. Upon completion of testing, certify to the Architect, in writing, that the specified tests have been performed and that the installation complies with the specified requirements and provide a report of the test observations signed by qualified inspector.

END OF SECTION

PLUMBING

SECTION 220501

PART 1 - GENERAL

1.1 APPLICABLE REQUIREMENTS

A. All work to be furnished and installed under this section shall comply with all the requirements of General Conditions, Supplemental Conditions, Division 01 - General Requirements, and Section 220500 - Basic Materials and Methods, and other Sections in Division 22 specified herein.

1.2 RELATED WORK SPECIFIED ELSEWHERE

A. Section 220500: Basic Materials and Methods

B. Section 222113: Plumbing Piping, Valves and Specialties

C. Section 224000: Plumbing Fixtures

D. Section 221123: Plumbing Equipment

1.3 SCOPE

A. All work includes removing and modifying existing and providing new plumbing. Systems as specified under this section shall include but not necessarily be limited to the following:

1. Connection to utilities at five (5) feet from the building. Coordinate with the Civil Engineering Plans and/or Division 02 work.
2. Connection of all waste, vent, and water piping to all plumbing fixtures, drinking fountains, sinks, electric water coolers, drains and mechanical equipment.
3. Provide for future expansion as indicated.
4. Connect hot and/or cold water to hose bibbs and wall hydrants. Provide individual shut-off valves at each location.
5. Provide traps on all floor drains with trap primer where specified. Pipe to trap shall be ½" minimum.
6. 100°F hot water shall be mixed at point of use for service to public fixtures including lavatories.
7. Provide connections for all area drains, catch basins, downspouts, roof drains and overflow drains to storm sewer system.
8. Contractor to start gas system at discharge flange of meter setting assembly. Provide regulator assembly to reduce pressure to 2.0 psi maximum entering building.
9. Provide gas shut-off and regulator assembly at each connection, as detailed on drawings. Supply to any piece of equipment shall not exceed 0.5 psi.
10. Temporary Water Service: As directed by the General Contractor, the plumber shall provide a temporary metered water service and temporary water risers with four (4) hose bibbs installed at each level as the building proceeds upwards to the roof.

1.4 SUBMITTALS

A. Prior to construction submit for approval all materials and equipment in accordance with Division 01. Submit manufacturer's data, installation instructions, and maintenance and operating instructions for all components of this section including, but not limited to, the following:

1. Plumbing specialties.
2. Trap primers.
3. Cleanouts.
4. Drains
5. Roof flashing
6. Wall hydrants and hose bibbs
7. Mixing valves

1.5 DELIVERY, STORAGE, AND HANDLING

A. Deliver products to the site in containers with manufacturer's stamp or label affixed.

B. Store and protect products against dirt, water, chemical, and mechanical damage. Do not install damaged products - remove from project site.

1.6 WARRANTY

A. Provide one-year (12 months) warranty. The warranty shall include parts, labor, travel costs, and living expenses incurred by the manufacturer to provide factory authorized service.

PART 2 - PRODUCTS

2.1 GENERAL

A. All materials and equipment under this Division of the Specifications shall be new, of best grade and as listed in printed catalogs of the manufacturer.

B. All manufactured materials shall be delivered and stored in their original containers. Equipment shall be clearly marked or stamped with the manufacturer's name and rating.

C. All items shall be furnished Vandal Proofed. One type of vandal proof screw is to be used through out this facility. Coordinate with general contractor for type.

D. The following products to be included as part of this work but specified under Section 220500 Basic Materials and Methods and Section 222113 Plumbing Piping, Valves and Specialties:

1. Piping.
2. Valves.
3. Hangers and supports.
4. Escutcheon plates, flashings, and sleeves.
5. Identification markers and signs.
6. Excavation and backfill.
7. Pressure and temperature gauges.

E. Plumbing Fixtures: Refer to Section 224000.

F. Plumbing Equipment: Refer to Section 221123.

G. Products made of, or containing, lead, asbestos, mercury, or other known toxic or hazardous materials are not acceptable for installation under this Section. Any such products installed as part of the work of this Section shall be removed and replaced and all costs for removal and replacement shall be borne solely by the Contractor(s).

2.2 VALVES: DOMESTIC WATER AND NATURAL GAS (SEE SECTION 222113)

2.3 CLEANOUTS

A. Cleanout Plugs: Bronze, taper thread countersunk head.

B. Floor Cleanouts: Service weight cast-iron body and frame, flange with flashing clamp, adjustable cast-iron collar, caulk inside, Ty-seal or No-hub joints, neoprene plug gasket seal.

1. Tiled Areas: Zurn ZN-1400-X-KC-VP-BP or J.R. Smith 4148 - F - C - U
2. Unfinished Areas: Zurn ZN-1400-HD-KC-VP-BP or J.R. Smith 4108 C - F - C - U
3. Yard Areas: Zurn Z 1474-IN-VP or J.R. Smith 4258 - C - U

C. Cleanout Tee: Cast iron cleanout tee with countersunk brass plug, neoprene plug gasket seal and smooth stainless steel cover.

1. Manufacturer: Zurn Z-1446-BP or J. R. Smith 4532 S (Y)

2.4 ROOF FLASHING

A. Flashing: Unless indicated otherwise on the drawings flashings for pipes through the roof shall be galvanized sheet metal, 24 gauge minimum with seams and joints lapped and soldered watertight. Coordinate with Architectural Sections for flashings and roofing.

B. Vent Pipes: Provide caulk type, vandalproof hood with Allen head vandal proof screws for all vent pipes through roof or preformed vinyl/galvanized steel assembly.

2.5 WATER HAMMER ARRESTORS

A. Piston Type: Hard drawn copper construction, mirror finished internal surfaces; machine finished brass piston, air charged, 250 psi rated, tested and certified per PDI WH-201 and ASSE 1015. Coordinate location of access panels with Architect or provide access panel where none are shown.

1. Manufacturer: Watts Series 15, Precision Plumbing series SC, or Sioux Chief.

2.6 DRAINS

A. General: Provide drains of type and size as indicated on drawings, including features, as specified herein.

1. Acceptable Manufacturers: J.R. Smith, Zurn, Wade, Sioux Chief, Josam and Watts.

B. Downspout Fitting, DSN-1: Cast bronze body construction and flange, satin bronze finish, threaded outlet. Provide with low profile connector elbow Zurn Z-1042.

1. Manufacturer: Zurn Z-199, Watts RD-940 or J.R. Smith 1770.

2.7 TRAP PRIMER

A. Cast bronze construction, vacuum breaker, ½" sweat solder connection. Install in accessible location or provide access panel.

PART 3 - EXECUTION

3.1 GENERAL

A. This system to be installed by an experienced firm regularly engaged in the installation of plumbing systems as specified by the requirements of the Specifications.

B. Install all items specified in this section of the Specification under the full purview of local and state governing agencies.

C. Refer to Section 220500: General Plumbing Requirements for installation of piping, valves and other requirements.

3.2 PERFORMANCE OF WORK

A. Examine areas, physical conditions and phasing requirements under which materials are to be installed. Layout the system to suit the different types of construction and equipment as indicated on the drawings.

B. Work shall start immediately after authorization has been given to proceed so that the overall progress of the construction is not delayed. No foundry items to be installed until submittals have been approved.

C. Coordinate with other trades as necessary to properly interface components of the plumbing system.

D. Follow manufacturer's directions and recommendations in all cases where the manufacturers of articles used on this Contract furnish directions covering points not shown on the drawings or covered in these Specifications.

E. The omission from the drawings or Specifications of any details of construction, installation, materials, or essential specialties shall not relieve the Contractor from furnishing the same in place for a complete system.

3.3 PIPING INSTALLATION

A. The word “piping” shall mean all pipes, fittings, nipples, valves and all accessories connected thereto.

B. Run piping generally parallel to the axis of the building, arranged to conform to the building requirements and to suit the necessities of clearance for other mechanical ducts flues, conduits and

work of other trades and close to ceiling or other construction as practical, free of unnecessary traps or bends.

C. Run horizontal sanitary drainage at uniform pitch of not less than 1/8" per foot, unless otherwise indicated. Pitch horizontal vent piping downward from stack to fixtures.

D. Run drainage piping as straight as possible with long radius turns. Offsets shall be made at an angle of 45° or less.

E. Grade water supply piping for complete drainage of the system. Install hose bibbs at low points.

F. Piping connections to all equipment shall be made up with unions.

G. Provide sufficient elbows, swings and offsets to permit free expansion and contraction.

H. Use reducers or increasers. Use no bushings.

I. Ream or file each pipe to remove burrs. Inspect each length of pipe and each fitting for workmanship and clear passageway.

J. Vent pipes to terminate at least 6" above the roof. Provide vandal proof hood assembly.

K. Cover, cap or otherwise protect open ends of all piping during construction to prevent damage to threads or flanges and prevent entry of foreign matter. Disinfect water supply piping as specified.

L. Exposed connections to equipment shall be installed with special care, showing no tool marks or threads at fittings and piping. No bowed or bend piping to be permitted.

M. All ferrous to non-ferrous connections shall be made by means of dielectric fittings. Submit shop drawings for approval.

N. Use extra heavy pipe for nipples, where unthreaded portion is less than 1½". Use no close nipples. Use only shoulder nipples.

O. All piping shall be inspected for defects and flaws prior to installation. Remove any damaged piping from job site. Piping shall be thoroughly cleaned of dirt, debris or rust.

P. Cleanouts to be provided at each change in direction greater than 135° or 100' maximum intervals on underground piping.

Q. Cleanouts to be same size as pipe except cleanout plugs larger than 4" shall not be required.

R. Cleanouts on concealed piping to be extended through and terminate flush with the finished wall or floor. Cover plates to be provided on all cleanout plugs in finished areas.

S. The bodies of cleanout ferrules to conform in thickness to that required for pipe and fittings of the same metal.

T. Route piping on roof on manufactured polypropylene pipe supports: Roof Top Blox RTB-#.

3.4 TESTING AND DISINFECTING - PLUMBING SYSTEMS

A. General: The Contractor to perform all field tests and provide all labor, equipment, and incidentals required for the tests. Owner to witness all field tests and conduct all field inspections. The Contractor to give the Owner ample notice of the dates and times scheduled for tests. Any deficiencies to be completely retested at no additional cost.

1. Inspection: Inspection to continue during installation and testing. Perform a final inspection of the equipment prior to installation to determine conformity to the type, class, grade, size, capacity, and other characteristics specified herein or indicated. Correct or replace all rejected equipment prior to installation.
2. Water Distribution Piping Test: Before fixtures are set, subject the entire hot and cold piping system to a hydrostatic pressure test of 150 pounds per square inch with water for not less than 8 hours in order to permit inspection of all joints with no evidence of leakage. Where a portion of the water distribution piping is to be concealed before completion, test this portion separately as specified for the entire system.
3. Sanitary, Waste, Storm, Rainwater, and Vent Piping Test: Before the installation of any fixtures or drains, cap the ends of the system and fill all lines with water to the roof level and allow to stand for at least 30 minutes without leakage. Make tests within building with piping exposed. If the system is tested in sections, tightly lug each opening, except the highest opening of the section under test, and fill each section with water and test with at least a 10' head of water.
4. Sanitary Drainage Vent, Storm, Rainwater and Fixture System Final Test: Give sanitary, drainage vent, and fixture systems an in-service test after complete installation. After all fixtures are installed, test the entire vent and sewer system and prove gas and water tight. Final test shall be with air. Before proceeding with test, fill all traps with water. Close all stacks and line openings during test, for a minimum period of 24 hours. If test reveals leakage of air at any point, repair and retest the system.
5. Disinfection of Water Distribution System: After pressure tests have been made thoroughly flush the entire domestic water distribution system with water until all entrained dirt and mud have been removed, and sterilize by chlorinating material. The chlorinating material shall be liquid chlorine. The chlorinating material shall provide a dosage of not less than 50 parts per million and shall be introduced into the system or part thereof in an approved manner. Retain the treated water in the pipe for 24 hours, or, fill the system or part thereof with a water-chlorine solution containing at least 200 parts per million of chlorine and allow to stand for three hours. Open and close all valves in the system being disinfected three times during the contact period. Then flush the system with clean potable water until the residual chlorine is reduced to less than 1.0 ppm. During the flushing period open and close all valves and faucets three times. From at least three divergent points in the system, take samples of water in properly sterilized containers for bacterial examination. Repeat the disinfecting until tests indicate that satisfactory bacteriological results have been obtained.

    a. Taking of samples shall be witnessed by Architect or Owner's representative. Samples are to be taken and tested by an independent analytical testing laboratory. Written reports shall be supplied to Architect for approval.

3.5 OPERATING TESTING AND CERTIFICATION - PLUMBING SYSTEMS

A. Upon completion and disinfection, and prior to acceptance of the installation, the Contractor to subject the plumbing system to operating tests to demonstrate satisfactory, functional, and operating efficiency. Such operating tests to include the following information in a report with conclusions as to the adequacy of the system.

1. Time, date, and duration of tests.

2. Water pressures at most remote location.
3. Operation of all valves and hydrants.
4. Operation of all floor drains by flooding with water.
5. Quality of domestic water.
6. Read all indicating instruments at half-hour intervals unless otherwise directed. Supply four copies of the test report to the Owner.

3.6 CLEANING EQUIPMENT AND MATERIALS

A. In addition to the requirements of Section 220500, provide for the safety and good condition of all materials and equipment until final acceptance by the Owner. Protect all materials and equipment from damage. Provide adequate and proper storage facilities during the progress of the work.

B. All piping, finished surfaces, and equipment to have all grease, adhesive labels, and foreign materials removed.

C. All piping to be drained and flushed to remove grease and foreign matter. Pressure regulating assemblies, traps, flush valves, and similar items shall be thoroughly cleaned. Remove and thoroughly clean and reinstall all liquid strainer screens after the system has been in operation for ten days.

D. When connections are to be made to existing systems, the Contractor is to do all cleaning and purging of the existing systems required to restore them to the condition existing prior to the start of work.

3.7 OPERATION MANUALS, START-UP SERVICE, WARRANTIES, ACCEPTANCE AND GUARANTEES

A. General: Refer to Section 220500 for details.

END OF SECTION

PLUMBING EQUIPMENT

SECTION 221123

PART 1 - GENERAL

1.1 APPLICABLE REQUIREMENTS

A. All work to be furnished and installed under this section shall comply with all the requirements of General Conditions, Supplemental Conditions, Division 01 - General Requirements, and Section 220500 - Basic Materials and Methods, and other Sections in Division 22 specified herein.

1.2 SCOPE

A. All work to be furnished and installed under this section shall include but not necessarily be limited to the following:

1. Grease Intercepter

1.3 RELATED WORK SPECIFIED ELSEWHERE

A. Section 220500: Basic Materials and Methods

B. Section 220501: Plumbing

C. Section 224000: Plumbing Fixtures

1.4 SUBMITTALS

A. Prior to construction submit for approval all materials and equipment in accordance with Division 01. Submit manufacturer's data, colors, installation instructions, and maintenance and operating instructions for all components of this section including, but not limited to, the following:

1. Grease Intercepter

B. Electrical Work: Refer to Division 22, Section 220500 for requirements.

C. Shop Drawings: Submit rough-in drawings. Detail dimensions, rough-in requirements, required clearances, and methods of assembly of components and anchorages.

D. Start-up: Provide written report on start-up in accordance with Section 220500.

1.5 DELIVERY, STORAGE, AND HANDLING

A. Deliver units to the site in containers with manufacturer's stamp or label affixed.

B. Store and protect products against dirt, water, chemical, and mechanical damage. Do not install damaged products - remove from project site.

1.6 WARRANTY

A. Provide one year (12 months) warranty. The warranty shall include parts, labor, travel costs, and living expenses to repair or replace products or systems.

PART 2 - PRODUCTS

2.1 GREASE INTERCEPTER, GT-1

A. Grease interceptor to be constructed of concrete with three 24” clear access manholes with traffic weight frame and covers.

B. Interceptor to be IAPMO listed and have a minimum of 2 components. See schedule for capacity.

C. Provide sampling vault down stream of interceptor.

D. Manufacturer: Jensen Precast.

PART 3 - EXECUTION

3.1 GENERAL

A. Examine areas and conditions under which equipment is to be installed. Do not proceed with work until unsatisfactory conditions have been corrected.

B. Install equipment in accordance with manufacturer's installation instructions. Install units plumb and level, firmly anchored in locations indicated, and maintain manufacturer's recommended clearances.

C. Orient controls and devices needing service and maintenance to have adequate access.

D. Connect water piping to units with shutoff valves and unions as indicated.

E. Start-Up: Start-up, test, and adjust equipment in accordance with manufacturer's start-up instructions. Check and calibrate controls. Start-up to be by authorized manufacturer's representative or agent.

3.2 OPERATION MANUALS, START-UP SERVICE, WARRANTIES, ACCEPTANCE AND GUARANTEES

A. General: Refer to Section 220500 for details.

END OF SECTION

PLUMBING PIPING, VALVES AND SPECIALTIES

SECTION 222113

PART 1 - GENERAL

1.1 APPLICABLE REQUIREMENTS

A. All work to be furnished and installed under this section shall comply with all the requirements of General Conditions, Supplemental Conditions, Division 01 - General Requirements, Section 220500 - Basic Materials and Methods, and other Sections in Division 22 specified herein.

1.2 SCOPE

A. All work to be furnished and installed under this Section shall comply with all the requirements of Division 01, and shall include, but not necessarily be limited to the following:

1. Pipe and Fittings

   a. Sanitary waste and vent
   b. Storm drain and overflow
   c. Cold water
   d. Hot water

2. Valves

   a. Water valves
   b. Natural gas valves
   c. Gas pressure regulator valves
   d. Thermostatic mixing valves

3. Piping specialties

   a. Pipe escutcheons
   b. Strainers
   c. Drip pans
   d. Air vent
   e. Dielectric unions
   f. Unions
   g. Flanges
   h. Pipe sleeves
   i. Sleeve seals
   j. Valve boxes
   k. Pipe coating
   l. Gas connectors

1.3 RELATED WORK SPECIFIED ELSEWHERE

A. Section 220500: Basic Materials and Methods

B. Section 220501: Plumbing

C. Section 224000: Plumbing Fixtures

D. Section 221123: Plumbing Equipment

E. Division 26: Electrical

1.4 QUALITY ASSURANCE

A. Manufacturers Qualifications:

1. Manufactured items furnished shall be the current, cataloged product of the manufacturer.
2. Replacement parts shall be readily available and stocked in the USA.

B. Codes and Standards:

1. All work shall be in full accordance with all applicable codes, ordinances and code rulings.
2. The Contractor shall furnish without any extra charge the labor and material required for compliance of codes.
3. Perform all tests required by governing authorities and as required under all Division 22 Sections. Provide written reports on all tests.
4. Electrical devices and wiring shall confirm to the latest standards of NEC; all devices shall be UL listed and so identified.
5. All plumbing work shall comply with the Americans with Disabilities Act (ADA).
6. All excavation work must comply with all provisions of state laws including notification to all owners of underground utilities at least 48 business day hours, but not more than 10 business days, before commencing an excavation.

1.5 SUBMITTALS

A. Product Data: Submit manufacturer's technical product data for all piping, valves and specialties indicating dimensions, valve CV, tolerances etc.

B. Shop Drawings: Submit shop drawings indicating underground piping installation showing all fittings with inverts. Indicate all footings and grade beams.

C. Maintenance Data: Submit maintenance instructions on accordance with requirements of Division 01.

PART 2 - PRODUCTS

2.1 GENERAL

A. Furnish and install all new material, equipment, and apparatus hereinafter specified unless specifically noted otherwise. All material, equipment, and apparatus shall be identified by the manufacturer's name, nameplate, and pertinent data.

1. All pipe, pipe fittings and valves shall be manufactured in North America. Alternatives may be acceptable, but must be submitted and approved by the Engineer prior to bidding.

B. Type M copper piping is not acceptable for any pressure water piping unless specifically noted otherwise.

C. For all Grade B piping specified below grade provide a mill report with production identification numbers for piping submitted to permit tracking of pipe by mill and production lot.

D. All materials, equipment, and apparatus are mentioned as standards unless noted otherwise. The words "or approved equal" shall be considered to be subsequent to all manufacturer's names used herein, unless specifically noted that substitutes are not allowed.

2.2 STANDARD PIPE AND FITTING

A. Natural Gas Pipe & Fitting (Above Grade)

1. Pipe: ASTM A53, Schedule 40 black steel.

   a. Fittings: 150 lb. rating. ANSI B16.3, malleable iron threaded; ANSI B16.5, flanged; ANSI B16.9, steel.
   b. Joints: 2" and smaller, threaded; all piping inside the building 2-1/2" and larger, ANSI B16.25 bevelweld, ANSI B16.5 flanges, or ANSI B16.11 socket weld.

B. Natural Gas Piping (Below Grade)

1. Polyethylene, Grade 23, Type II, ASTM 2513, plain ends, heat fused joints, orange finish.

C. Trap Primer Piping:

1. Pipe: Domestic Only, ASTM B88, Type K, soft drawn copper water tube.
2. Fittings: No joints below ground. For pipes below grade double wrap with Scotch Wrap #51 or PASCO Wrap, with 50% overlap.

D. Domestic Water Pipe & Fittings (Below Grade):

1. Pipe: ASTM B88, Type K hard drawn copper water tube.
2. Fittings: Domestic Only, Elkhart, ANSI B16.22, wrought copper, 95%-5% tin-antimony solder joints. Wrap underground piping with Scotch Wrap or Pasco Wrap.

E. Condensate and indirect drains:

1. Pipe: ASTM B88, Type M, hard drawn copper water tube.
2. Fittings: ANSI B16.22, wrought copper.
3. Joints: Lead-free solder joints. Solder shall be lead-free nickel/silver bearing solder meeting ASTM B-32, ASTM B-828. Flux shall be water soluble and shall meet CDA standard test method 1.0 and ASTM B813-91.
4. Insulate condensate drain pipes with minimum ½" insulation to prevent moisture dripping from pipe.

F. Domestic Hot and Cold Water Pipe & Fittings (Above Grade):

1. Pipe: ASTM B88, Type L, hard drawn copper water tube.
2. Fittings: ANSI B16.22, wrought copper, 95%-5% tin-antimony solder joints.

G. Sanitary Sewer, Vent, Rainwater Pipe & Fittings:

1. Pipe: Tyler or AB&I or Charlotte Pipe and Foundry, ASTM A-74, ASTM A-888 cast iron, bituminous coated, “No-Hub”. Pipe and fittings shall be marked with the collective trademark of the Cast Iron Soil Pipe Institute and manufactured by AB &I, Charlotte or Tyler. Pipe showing rust or cracks in coating shall be removed and replaced.
2. Fittings: No-hub, ASTM A-888.
3. Couplings Below Grade: Heavy Duty Type 304 stainless steel couplings conforming to FM 1680 with neoprene sealing sleeve conforming to ASTM C-1540 having minimum shield thickness of 28 gauge. Husky SD-4000 or Clamp All 125 only.
4. Couplings Above Grade: Type 304 stainless steel couplings conforming to ASTM C-1540 and neoprene sealing sleeve, having minimum shield thickness of 34 gauge. Anaco or Ideal.

5. Couplings Above Grade: Band type stainless steel couplings conforming to ASTM C-1540 having a minimum thickness of 31 gauge with neoprene sealing sleeve conforming to ASTM C-564. Husky 2000 or Clamp All 80 only.

2.3 VALVES: GENERAL

A. General: Valve ratings shall exceed respective system operating pressures by 50% (minimum). All valves shall be line size unless otherwise noted.

B. Product Data: Submit manufacturer’s technical product data, including installation instructions for each type of valve. Include pressure drop curve or chart for each type and size of valve. Submit valve schedule showing manufacturer’s figure number, size, location, and valve features for each required valve.

C. Shop Drawings: Submit manufacturer’s assembly-type (exploded view) shop drawings for each type of valve, indicating dimensions, weights, materials, and methods of assembly of components.

D. Acceptable manufacturers (manufacturer and model number listed for individual valves indicates minimum acceptable by all manufacturers):

1. Gate, Ball, Check or Butterfly: Apollo, Hammond, Nibco (commercial grade, US manufacturer only), Milwaukee, Victaulic or Watts.

E. Valve Identification: Provide valves with manufacturer’s name (or trademark) and pressure rating clearly marked on the valve body.

F. Valve Features:

1. General: Provide valves with features indicated and, where not otherwise indicated, provide proper valve features. Comply with ASME B31.9 for building services piping, and ASME B31.1 for power piping.
2. Drain: Comply with MSS SP-45, and provide threaded pipe plugs.
3. Flanged: Valve flanges complying with ANSI B16.1 (cast iron), ANSI B16.5 (steel), or ANSI B16.24 (bronze).
4. Threaded: Valve ends complying with ANSI B2.1.
5. Solder-Joint: Valve ends complying with ANSI B16.18.
6. Flangeless: Valve bodies manufactured to fit between flanges complying with ANSI B16.1 (cast iron), ANSI B16.5 (steel), or ANSI B16.24 (bronze).

2.4 DOMESTIC PLUMBING SERVICE VALVES

A. Gate Valves:

1. 2" and Smaller: Class 125, MSS SP-80, ASTM B62 cast bronze body, soldered ends, bronze bonnet, bronze wedge, rising stem, brass packing gland, non-asbestos packing and aluminum hand-wheel.
2. 2-1/2" and Larger: Class 125, MSS SP-70, ASTM A126 Grade B cast iron body, flanged ends, cast iron bonnet, cast iron wedge, bronze trim, rising stem, brass packing gland, non-asbestos packing and cast iron hand-wheel.

B. Ball Valves:

1. 2 1/2" and Smaller: 600 psi, 2 piece, bronze body, soldered ends for copper pipe and threaded ends for iron pipe, chrome plated brass ball, Teflon seat, brass stem, steel handle, full port. Apollo 70-200 series.

C. Check Valves:

1. 2" and Smaller: Class 125, MSS SP-80, ASTM B62 and ASTM B16, cast bronze body, soldered ends for copper pipe, screwed cap, swing type, Teflon bronze disc.
2. 2-1/2" and Larger: Class 125, MSS SP-71, ASTM A126 class B cast iron body, bolted bonnet flanged ends, bolted cap, swing type, cast iron disc with bronze face rings.
3. Vertical or High Flow: Class 125, cast bronze, high-flow body, TFE seat, brass check, stainless steel guide and spring. Watt #6015.

2.5 NATURAL GAS, LP GAS AND OIL SERVICE VALVES

A. Ball Valves:

1. ½" and ¾": Brass body, U.L. listed, CSA approved for pressure of system, bronze ball valve, 175 WOG, with integral lever handle. Apollo 64 series or Watts #FBV-1.
2. 1" thru 1-1/2": 175 psi working pressure, CSA and UL approved, bronze body, welded ends, stainless steel ball, stainless steel stem, steel handle with memory stop tab, conventional port.
3. Lubricated Plug Valve, 2" and Larger: Class 125, MSS SP-78, 200 PSI, UL listed, CSA approved for pressure of system, lubricated plug type, semi-steel body, loose wrench operated, straight way pattern round port, combination button head fitting and lubricant screw, Teflon seal and discs.

B. Seismic Gas Shutoff Valves:

1. ¾” thru 2” (low and medium pressure, screwed body): U.L. Listed valve meeting ASCE 25-97, positive closure, soft seal seating, visual open-close indicator, manual reset, and closure time interval within 5 seconds when subjected to a sinusoidal oscillation with peak acceleration of 0.3G and a period of 0.4 seconds. Koso/California Valve Series EV, or approved equal, sized for 0.5 PSI or 20 PSI max operating pressure, respectively.
2. 2”, 3” and 4” (High pressure, screwed body): U.L. Listed valve meeting ASCE 25-97,manual reset, soft seat construction for positive sealing, visual open-close indicator, tripping mechanism with non-creeping rolling latch, and closure time interval within 5 seconds when subjected to sinusoidal oscillation with peak acceleration of 0.3G and a period of 0.4 seconds. Koso/California Valve Series EV315, or approved equal, sized for 20 PSI max. operating pressure.

2.6 GAS PRESSURE REGULATOR VALVES

A. Diaphragm operated, steel construction of size and capacity as indicated on drawings. Regulators shall be approved serving gas supplier, CSA and UL listed. Fisher, Sherwood, or approved equal.

2.7 THERMOSTATIC MIXING VALVES

A. General: Thermostatic valve constructed of brass and stainless steel, with screwdriver locking temp. regulator and adjustable check stops. Provide access door with cylinder lock. Finish as selected by Architect. Powers E480 or Leonard #210 SB.

2.8 THERMOMETERS AND GAUGES

A. General:

1. Certification: Provide meters and gauges whose accuracies, under specified operating conditions, are certified by manufacturer.
2. No mercury shall be used in thermometers due to hazardous material classification.
3. Acceptable Manufacturers: Weksler, Winters, Trerice, Marshalltown or US Gauge.

B. Thermometers:

1. Bi-Metal Type: Provide bi-metal glass thermometers of materials, capacities, and ranges indicated, designed and constructed in service indicated. Accuracy shall be 1% +/- full scale with adjustable recalibration.

   a. Case: Type 300 series stainless steel, hermetically sealed, glass window, 3" diameter dial, with adjustable angle.
   b. Adjustable Joint: Die cast aluminum, finished to match case, 180° adjustment in vertical plane, 360° adjustment in horizontal plane, with locking device.
   c. Scale: Satin faced, non-reflective aluminum, permanently etched markings.
   d. Stem: Stainless steel, adjustable angle socket, length to suit installation.

2. Range: Conform to the following:
   1) Hot Water: 20°F - 240°F with 2°F scale divisions.
   2) Cold Water: -40°F - 160°F with 2°F scale divisions.

C. Pressure Gauges:

1. General: Provide pressure gauges of materials, capacities, and ranges indicated, designed and constructed for use in service indicated.
2. Type: General use, 1% accuracy ANSI B40.1 grade A, phosphor bronze bourbon type, bottom connection.
3. Case: Drawn steel or brass, glass lens, 4-1/2" diameter.
4. Connector: Brass with ¼" male NPT.
5. Scale: White coated aluminum, with permanently etched markings.
6. Pressure differential range shall be 100 psig minimum for the appropriate application with maximum 1 psig divisions.

D. Pressure Gauge Cocks:

1. General: Provide pressure gauge cocks between pressure gauges and gauge tees on piping systems. Gauge cock constructed of brass with ¼" female NPT on each end, and "T" handle brass plug.
2. Syphon: ¼" straight coil constructed of brass tubing with ¼" male NPT on each end.
3. Snubber: ¼" brass bushing with corrosion resistant porous metal disc, through which pressure fluid is filtered. Select disc material for fluid served and pressure rating.

E. Pressure Gauge Connector Test Plugs:

1. Provide pressure gauge connector plugs pressure rated for 500 psi and 200°F (93°C). Constructed of brass and finish in nickel-plate, equip with ½" NPS fitting, with self-sealing valve core type neoprene gasketed orifice suitable for inserting 1/8" O.D. probe assembly from dial type insertion pressure gauge. Equip orifice with gasketed screw cap an chain. Provide extension, length equal to insulation thickness, for insulated piping.

2.9 PIPING SPECIALTIES

A. General:

1. Provide factory-fabricated piping specialties recommended by manufacturer for use in service indicated. Provide piping specialties of types and pressure ratings indicated for each service, or provide proper selection to comply with installation requirements. Provide sizes as indicated, and connections, which properly mate with pipe, tube, and equipment connections. Where more than one type is indicated, selection is installer's option.

B. Pipe Escutcheons:

1. Provide pipe escutcheons as specified herein with inside diameter closely fitting pipe outside diameter, or outside of pipe insulation where pipe is insulated. Select outside diameter of escutcheon to completely cover pipe penetration hole in floors, walls, or ceilings; and pipe sleeve extension, if any. Furnish pipe escutcheons with nickel or chrome finish for occupied areas, prime zinc base paint finish for unoccupied areas.
2. Pipe Escutcheons for Moist Areas: For waterproof floors, and areas where water and condensation can be expected to accumulate, provide stainless steel, cast brass or sheet brass escutcheons, solid or split hinged.
3. Pipe Escutcheons for Dry Areas: Provide stainless steel escutcheons, solid or split hinged.

C. Low Pressure Y-Type Pipeline Strainers:

1. Provide strainers full line size of connecting piping, with ends matching piping system materials. Select strainers for 125% of the working pressure of piping system, with Type 304 stainless steel screens, with 3/64" perforations at 233 0.045" perforations per square inch.
2. Threaded ends, 2" and smaller: Cast-iron body, screwed screen retainer with centered blowdown fitted with hose bibb. Sarco, Wheatley or Mueller.
3. Flanged ends, 2-1/2" and larger: Cast-iron body, bolted screen retainer with off-center blowdown fitted with hose bibb. Sarco, Wheatley or Mueller.
4. <<Grooved ends 2 ½ and larger: Ductile iron body, bolted screen retainer with off center blowdown fitted with hose bibb. Victaulic or Gustin-Bacon.>>

D. Drip Pans:

1. Provide drip pans fabricated from 16-gauge galvanized sheet metal with watertight joints, and with edges turned up 2-1/2". Reinforce top by structural angles. Provide hole, gasket, and flange at low point for watertight joint and 1" copper drain line connection. Extend 1” drain to nearest approved receptor.

E. Dielectric Unions:

1. Provide standard products recommended by manufacturer for use in service indicated, which effectively isolate ferrous from non-ferrous piping (electrical conductance), prevent galvanic action, and stop corrosion.

F. Dielectric Flanges: Provide dielectric flanges for flanged transitions between dissimilar metal piping. Watts Series 3100 or approved equal.

G. Unions:

1. Unions shall be of type specified in following schedule:

   a. Black Steel, 2" and smaller: 250 lb. screwed malleable iron, ground joint, brass to iron seat.
   b. Black Steel, 2-1/2" and larger: 150 lb. cast iron screwed flanged, flat faced, full faced gasket.
   c. Soldered Copper or Brass Pipe, 2" and smaller: 150 lb. cast bronze or copper, ground joint, non-ferrous seat with soldered ends.
   d. Screwed Copper or Brass Pipe, 2" and smaller: 150 lb. cast brass, ground joint, brass to brass seat, with threaded ends.
   e. Flanged Copper or Brass Pipe, 2-1/2" and larger: two (2) 150 lb. cast bronze flanges.
   f. Manufacturer: EPCO, Mueller, Stanley G. Flagg or Watts.

H. Flanges:

1. Provide flanges at flanged connections to equipment, tanks and valves. Faces of flanges being connected shall be alike in all cases. Connection of raised-face flange to flat-faced flange not permitted.
2. Use ASTM A307, Grade B, bolts and nuts for cast iron flanges and ASTM A193 for steel flanges. Regular square head unfinished bolts with heavy semi-finished hex nuts ASTM A194. Cadmium plated where exposed to weather. Rating: 150 lb. or 300 lb. in high pressure portions.
3. Type of pipe and corresponding flanges as follows:

   a. Screwed Black Steel Pipelines: 125 lb. black cast iron screwed flange, flat faces.
   b. Welded Steel Pipe, 150 lb. black forges steel welding flanges, 1/16" raised fact ASTM A181 Grade I. Use flat face when connected to flat faced companion flange.

I. Pipe Sleeves:

1. Provide fire proof sleeve assemblies utilizing UL rated sealant systems at all fire rated penetrations. For non-rated sleeve penetrations pack the annular space between the pipe and sleeve with fiberglass and/or mastic.
2. Sleeves shall provide a minimum ½" annular clearance around pipe.
3. Sheet metal: Fabricate from galvanized sheet metal; round tube closed with snaplock joint, welded spiral seams, or welded longitudinal joint. Fabricate from the following gauges: 3" and smaller, 20 gauge; 4" to 6", 16 gauge; over 6", 14 gauge.
4. Steel pipe: Fabricate from Schedule 40 galvanized steel pipe; remove burrs.
5. Iron pipe: Fabricate from cast iron or ductile-iron pipe; remove burrs.
6. Plastic and copper pipe: Fabricate from Schedule 80 PVC plastic pipe; remove burrs.
7. Sleeves through interior concrete walls and floors: Telescopic, submerged, adjustable sleeves by Adjust-to-Crete, AMI or Shamrock. Floor sleeves to extend a minimum of 1" above finished floor.
8. Through exterior walls and floor on grade: 150-pound class cast-iron pipe sleeve. Where waterproof membranes are used, provide membrane clamps. For insulated piping, sleeve diameter shall not be less than diameter of insulated pipe.

J. Sleeve Seals:

1. All sleeves shall be sealed to prevent intrusion of moisture, dust or insects.

2. Underground: For sleeves passing through exterior or foundation walls, provide mechanical link seal assembly.
3. Aboveground: For sleeves passing through walls or floors provide a non-toxic 3-hour rated fire resistant silicone foam sealant with a Flame Spread Rating of 20. Sealant to be tested and approved under UL 263, ASTM E119, and NFPA 251 Standards. All fire rated penetrations shall be sealed with approved UL System.
4. Local Approvals: All seals to be provided shall be in accordance with the regulations of all governing agencies of the city, county, and State Fire Marshal's Office.

K. Valve Boxes: Concrete body, cast iron cover with vandal resistant screws, extensions as required to extend full depth to valve. Valve box cover lettering shall correspond to the valve service, "Water", "Gas", "Fire", "Sewer", etc. Christy #G8 or equal.

2.10 PIPE COATING

A. All underground steel and copper pipe fittings, and all above ground steel and copper pipe and fittings in corrosive air environments shall be covered with one of the following methods:

1. Twice Wrap 20 Mil. Scotch Wrap PVC No. 51, 50% overlap.
2. Prefabricated extruded plastic cover with joints sealed with two coats of 20 Mil. Scotch Wrap No. 51 or Pasco Wrap 20 mil weight.
3.

2.11 EXPANSION COMPENSATORS

A. General: Pipe expansion, in general, is to be absorbed in bends, swing joints, expansion loops, and offsets. All piping mains, branches and runouts shall be installed to allow for free expansion and contraction without developing leaks or undue stressing of pipe. Stresses shall be within allowable limits of ASME B31.1 for pressure piping. Expansion products to conform to the standards of the Expansion Joint Manufacturer's Association. Expansion joints shall not required packing. Installer shall select materials and pressure/temperature ratings to suit intended service. Select packless expansion joints to provide 150% absorption capacity of calculated maximum piping expansion between anchors. All connections shall have ends to match piping system application.

B. Flexible Expansion Joint/Seismic Connector for Steel Pipe: Stainless steel hose and braid, 180° return, CSA approved, and end fittings. Metraflex #Metraloop or approved equal.

PART 3 - EXECUTION

3.1 GENERAL

A. Workmanship shall be performed by licensed journeymen or master mechanics and shall result in an installation consistent with the best practices of trades.

B. Install work uniform, level and plumb, in relationship to lines of building. Do not install any diagonal, or otherwise irregular work unless so indicated on Drawings or approved by Architect.

3.2 MANUFACTURER'S DIRECTIONS

A. Follow manufacturers' directions and recommendations in all cases where the manufacturers of articles used on this Contract furnish directions covering points not shown on the Drawings or covered in these Specifications.

3.3 INSTALLATION

A. Coordinate the work between the various Plumbing Sections and with the work specified under other Divisions of the work or contracts toward rapid completion of the entire project. If any cooperative work must be altered due to lack of proper supervision or failure to make proper provisions in time, then the work hereunder shall include all expenses of such changes as are necessary in the work under other contracts, and such changes shall be directly supervised by and made to the satisfaction of the Engineer.

B. The cooperative work not included in the Plumbing Division related to the general construction work is as follows:

1. All formed concrete work.
2. Framed openings in masonry and other Architectural and Structural elements.
3. Wood grounds and nailing strips in masonry and concrete.
4. Sloping of floors to drains and floor sinks.
5. Sloping of roof-to-roof drains and overflow drains.

C. Inspect all material, equipment, and apparatus upon delivery and do not install any that may be subject to rejection as a result of damage or other defects. Provide tarps and visqueen cover to protect equipment and piping delivered to and stored at the site.

3.4 WORKING PRESSURES

A. All fittings, valves, pipe, specialties equipment shall be rated for the working pressure subjected in the installed locations.

B. Drawings indicate working pressure in each system. The rating of the equipment and material shall not be less than that of the system pressures.

3.5 PIPES SIZES TO EQUIPMENT

A. General: Pipe sizes indicated shall be carried full size to equipment served. Any change of size to match equipment connection shall be made within one foot of equipment.

B. At temperature control valves with sizes smaller than connected lines, reduction shall be made immediately adjacent to valve.

3.6 PIPING INSTALLATION

A. General: Install pipes and pipe fittings in accordance with recognized industry practices which will achieve permanently leakproof piping systems, capable of performing each indicated service without piping failure. Install each run with minimum joints or couplings, but with adequate and accessible unions for disassembly and maintenance or replacement of valves and equipment. Reduce sizes (where indicated) by use of reducing fittings. Align piping accurately at connections, within 1/16" misalignment tolerance. Comply with ASME B31 Code for Pressure Piping.

B. Locate piping runs, except as otherwise indicated, vertically and horizontally (pitched to drain) and avoid diagonal runs wherever possible. Orient horizontal runs parallel with walls and column lines. Locate runs as shown or described by diagrams, details, and notations or, if not otherwise indicated, run piping in shortest route which does not obstruct space or block access for servicing building and its equipment. Hold piping close to walls, overhead construction, and other structural and permanent-enclosure elements of building. Limit clearance to 1/2" where furring is shown for enclosure or concealment of piping, but allow for insulation thickness, if any. Where possible, locate insulated piping for 1" clearance outside insulation. Whenever possible in finished and occupied spaces, conceal piping from view, by locating in column enclosures, in hollow wall construction, or above suspended ceilings. Do not encase horizontal runs in solid partitions, except as indicated.

3.7 WELDING

A. Qualifications of Welders: Welders performing work under this Contract shall be certified and qualified in accordance with tests prescribed by the National Certified Welding Bureau (NCWB) or by other approved test procedures using methodology and procedures covered in the ASME Boiler and Pressure Vessel Code, Section IX, "Qualification Standard for Welding and Brazing Procedures, Welders, Brazers, and Welding and Brazing Operators". Installation shall conform to ANSI 31.1 "Power Piping".

1. Submit for approval the names, identification, and welder's assigned number, letter or symbol of welders assigned to this project.
2. The assigned identification symbol shall be used to identify the work of each welder and shall be indelibly stamped immediately upon completion of each weld.
3. Welders shall be tested and certified for all positions.
4. Submit identifying stenciled test coupons made by each operator.
5. Any or all welders may be required to retake welding certification tests without additional expense.
6. When so requested, a welder shall not be permitted to work as a welder on this project until he has been recertified in accordance with NCWB.
7. Recertification of the welder shall be made after the welder has taken and passed the required tests.
8. Where piping 1-1/2 inches and smaller is butt or socket welded, submit 3 samples of test welds for approval.

3.8 PIPING SYSTEM JOINTS

A. All piping shall be cut squarely, free of rough edges and reamed to full bore. Piping shall be mechanically cleaned prior to make-up of joints and fully inserted into fittings.

B. Provide joints of type indicated in each piping system.

C. Thread pipe in accordance with ANSI B2.1. Cut threads full and clean using sharp dies. Ream threaded ends to remove burrs and restore full inside diameter. Remove excess cutting oil from piping prior to assembly. Apply pipe joint compound, or pipe joint tape (Teflon) where recommended by pipe/fitting manufacturer, on male threads at each joint and tighten joint to leave not more than 3 threads exposed.

D. Solder copper tube and fitting joints with lead free nickel/silver bearing solder meeting ASTM. B-32, in accordance with IAPMO IS 3-93, ASTM B-828 and Copper Development Association recommended procedures. Joints shall be cleaned by other than chemical means prior to assembly. "Shock" cooling is prohibited. Fluxes shall be applied liberally to the outside of the pipe and the solder cup of the fitting. Fluxes shall be water soluble for copper and brass potable water applications, and shall meet CDA standard test method 1.0 and ASTM B813-91. Solder shall be applied until a full fillet is present around the joint. Solder and flux shall not be applied in such excessive quantities as to run down interior of pipe. Lead solder or corrosive flux shall not be present at the jobsite.

1. Manufacturers:

   a. Solder: JW Harris "Bridgit" or Englehard "Silvabrite 100".
   b. Flux: Laco "Flux-Rite 90", MW Dunton "Nokorode CDA Flux", Hercules "Fluid Action Solder Flux".

E. Alternative domestic water piping mechanical press type connections: Copper press fittings shall be made in accordance with the manufacturer's installation instructions. The tubing shall be fully inserted into the fitting and the tubing marked at the shoulder of the fitting. The fitting alignment shall be checked against the mark on the tubing to assure the tubing is fully engaged (inserted) in the fitting. The joints shall be pressed using the tool approved by the manufacturer. Copper press fittings shall conform to the material and sizing requirements of ASME B16.22. O-rings for copper press fittings shall be EPDM. Viega/Ridgid or approved equal.

F. Piping shall be capped during construction to prevent entry of foreign material.

G. Weld pipe joints in accordance with recognized industry practice and as follows:

1. Weld pipe joints only when ambient temperature is above 0°F.
2. Bevel pipe ends at a 37.5° angle where possible, smooth rough cuts, and clean to remove slag, metal particles, and dirt.
3. Use pipe clamps or tack-weld joints with 1" long welds, 4 welds for pipe sizes to 10", 8 welds for pipe sizes 12" to 20".
4. Build up welds with stringer-bead pass, followed by hot pass, followed by cover or filler pass. Eliminate valleys at center and at edges of each weld. Weld by procedures which will ensure elimination of unsound or unfused metal, cracks, oxidation, blow-holes, and non-metallic inclusions.
5. Do not weld out piping system imperfections by tack-welding procedures. Refabricate to comply with requirements.
6. At Installer's option, install forged branch-connection fittings whenever branch pipe is indicated, or install regular T-fitting.

H. Flanged Joints: Match flanges within piping system, and at connections with valves and equipment. Clean flange faces and install gaskets. Tighten bolts to provide uniform compression of gaskets.

I. Cast-Iron Joints: Comply with coupling manufacturer's Cast Iron Soil Pipe Institute Standards and installation instructions.

3.9 VALVES

A. General: Except as otherwise indicated, comply with the following requirements:

1. Install valves where required for proper operation of piping and equipment, including valves in branch lines where necessary to isolate sections of piping. Locate valves so as to be accessible and so that separate support can be provided as necessary.
2. Provide Seismic shut off valve on gas main downstream of meter.

B. Insulation: Where insulation is indicated, install extended-stem valves, arranged in proper manner to receive insulation.

C. Selection of Valve Ends (Pipe Connections): Except as otherwise indicated, select and install valves with the following ends of types of pipe/tube connections:

1. Copper Pipe, 2-1/2" and Smaller: Soldered-joint valves.
2. Steel Pipe, 2" and Smaller: Threaded joint valves.
3. Larger Pipe Sizes: One of the following, at installer's option:

a. Flanged valves.
b. Lug valves.

D. Non-Metallic Disc: Limit selection and installation of valves with non-metallic discs to locations indicated and where foreign material in piping system can be expected to prevent tight shutoff of metal seated valves.

E. Renewable Seats: Select and install valves with renewable seats, except where otherwise indicated.

F. Fluid Control: Except as otherwise indicated, install gate, ball, plug, circuit setter, globe, and butterfly valves to comply with ASME B31.9.

G. Ball Valve: Ball valve used on gas systems shall be UL listed, CSA approved for pressure of system, no exception.

H. Valve Adjustment: After piping systems have been tested and put into service, but before final testing, adjusting, and balancing, inspect each valve for possible leaks. Adjust or replace packing to stop leaks, replace valve if leak persists.

I. Valve Identification: Tag each valve in accordance with "Mechanical Identification" section.

J. Cleaning: Clean factory-finished surfaces. Repair marred or scratched surfaces with manufacturer's touch-up paint.

3.10 MECHANICAL SLEEVE SEALS

A. Loosely assemble rubber links around pipe with bolts and pressure plates located under each bolt head and nut. Push into sleeve and center. Tighten bolts until links have expanded to form a watertight seal.

B. Fire Barrier Penetration Seals: Fill entire opening with sealing compound in compliance approved and listed UL system number. Adhere to manufacturer's installation instructions.

3.11 SUPPORTS AND HANGERS (SEE 220500)

3.12 EXPANSION COMPENSATORS

A. Install as noted on plans. Where plans do not indicate spacing of guides or other pertinent information, install per manufacturer's recommendations.

3.13 EXCAVATION AND BACKFILL

A. Underground piping shall be installed in stable, open trench work. Trench excavations shall be a minimum of 16” wide, true to line and grade. Contractor shall exercise all due shoring and safety procedures. No stones larger than 1” may be present in the trench to a minimum depth of 4” below the trench bottom. The trench shall be free of job site debris, and free of corrosive media. Pipe crown shall be not less than 24” below the finished ground surface for metallic pipe, and 30” for non-metallic pipe, unless otherwise indicated on the drawings or directed by the Architect. Trenches shall be kept free of excess moisture, and shall be kept open for only a short a time as necessary for installation, testing and inspection. Dispose of surplus excavation and seepage water as directed by the Architect.

B. Piping shall be properly bedded and backfilled over stable trench bottom to a level of at least 12” above the pipe crown with thin layers of unwashed sand, dampened but not puddle, and free of organic or corrosive materials and excessive moisture. Backfill shall be placed in thin layers not to exceed 6” and tamped by mechanical tampers to a minimum 90% Modified Proctor Density, in accordance with ASTM D-1557-58T. Trenches shall be backfilled to a minimum depth of 36” prior to being wheel loaded. Replace to their original condition all turf, plants, concrete, asphalt, or other improvements which constitute landscaping, traffic areas or other improved areas which become disturbed by excavation. In graded and undeveloped areas, in addition to procedures specified above, backfill trenches with crown 8” above the surrounding surface.

C. Excavated and backfill in soils of unstable nature shall be provided as directed by Architect.

3.14 PIPE INSPECTIONS

A. It is the intent of the Contract Documents that systems be inspected at completion of each phase while under tests required for administrative authorities, and prior to concealment, i.e. “Rough-in” “top-out” and final.

B. Inspection – Below Grade: All piping installed below grade shall be inspected prior to burial by the Architect, the Owner’s Representative or the Engineer. Contractor must notify Architect no less than 24 working hours prior to inspection time. Should the piping be buried prior to inspection the contractor may be requested to uncover the piping at no delay to the project and at no additional cost to the Owner.

C. Inspection – Above Grade: All piping installed above grade shall be made available for inspection upon completion and prior to finish of walls and ceilings. Notify the Architect, the Owner's Representative or the Engineer. Contractor must notify Architect no less than 24 working hours prior to the desired inspection time. Should the piping be hidden within the structure prior to inspection the contractor may be requested to uncover the piping at no delay to the project and at no additional cost to the Owner.

3.15 CLEANING, FLUSHING, DISINFECTING

A. General: Clean exterior surfaces of installed piping systems of superfluous materials, and prepare for application of specified coatings (if any).

B. Flush out piping systems with clean water before proceeding with required tests. Inspect each run of each system for completion of joints, supports, and accessory items.

C. Inspect pressure piping in accordance with procedures of ASME B31.

D. Disinfect water mains and water service piping in accordance with Section 220501.

3.16 TESTING

A. Provide all tests specified hereinafter and as otherwise required. Provide all test equipment, including test pumps, gauges, instruments, and other equipment required. Test all rotational equipment for proper direction of rotation. Upon completion of testing, certify to the Architect, in writing, that the specified tests have been performed and that the installation complies with the specified requirements and provide a report of the test observations signed by qualified inspector.

B. Piping: Remove from the system, during testing, all equipment which would be damaged by test pressure. Replace removed equipment when testing has been accomplished. The system may be tested in sections as the work progresses; however, any previously tested portion shall become a part of any latter test of a composite system. Correct leaks by remaking joints with new material.

C. Test time will be accrued only while full test pressure is on the system, unless indicated otherwise. "Tolerance" shall be no pressure drop, except that due to temperature change in a 24-hour period. Inspect and test all work prior to burying or concealing. Test pressure shall be one and one-half times the system operating pressure or the listed test pressure below, whichever is greater:

System	Test Medium	Test Pressure	Tolerance-Test Period
Domestic Water	Water	150 psig	None – 8 hours
Soil and Waste	Water	10 ft head, 5 psi	No leaks – 8 hours
Vent	Water	Top of Vent Terminal	No leaks – 8 hours
Storm	Water	Top of Roof Drain	No leaks – 8 hours
Natural Gas	Air or Nitrogen	100 psig	None – 24 hours

D. Final Drainage, Waste and Vent Test: Upon project closeout, Contractor shall perform and certify that the DWV system has passed the following test:

1. After all plumbing fixtures have been installed and their traps filled with water, all vent terminals and building drains shall be closed and a U-tube water manometer shall be inserted into the trap of water closet and an air compressor testing apparatus shall be attached to any suitable opening. An air pressure of 1" water column as indicated on the manometer shall be introduced into the system. The pressure shall hold constant for a period of 15 minutes

without the introduction of additional air. Leaks revealed during this test may be located by smoke test of other recognition methods.

E. Valves: Test all valve bonnets for tightness. Test operate all valves at least once from closed-to-open-to-closed position while valve is under test pressure. Test all automatic valves, including solenoid valves, and temperature and pressure relief valves, safety valves, and temperature and pressure relief valves not less than three (3) times.

F. Piping Specialties: Test all thermometers, pressure gauges, and water meters for accurate indication; automatic water feeders, air vents, trap primers, and vacuum breakers for proper performance. Test all air vent points to ensure that all air has been vented.

G. Backflow Preventers: Each testable backflow prevention device shall be tested and approved by certified testers after installation. Submit test results.

END OF SECTION

PLUMBING FIXTURES

SECTION 224000

PART 1 - GENERAL

1.1 APPLICABLE REQUIREMENTS

A. All work to be furnished and installed under this section shall comply with all the requirements of General Conditions, Supplemental Conditions, Division 01 - General Requirements, and Section 220500 - Basic Materials and Methods, and other Sections in Division 22 specified herein.

1.2 SCOPE

A. All work to be furnished and installed under this section shall include, but not necessarily be limited to, the installation of plumbing fixtures and trim.

1.3 RELATED WORK IN OTHER SECTIONS

A. Section 220500: Basic Materials and Methods

B. Section 222113: Plumbing Piping, Valves and Specialties

C. Section 220501: Plumbing

D. Section 221123: Plumbing Equipment

1.4 SUBMITTALS

A. Prior to construction submit for approval all materials and equipment in accordance with Division 01. Submit manufacturer's data, colors, installation instructions, and maintenance and operating instructions for all components of this section including, but not limited to, the following:

1. Plumbing fixtures.
2. Piping specialties.
3. Toilets.
4. Lavatories.
5. Sinks.
6. Showers or tubs.

B. Shop Drawings: Submit rough-in drawings. Detail dimensions, rough-in requirements, required clearances, and methods of assembly of components and anchorages. Coordinate requirements with Architectural Woodwork shop drawings specified in Division 06 for fixtures installed in countertops and cabinets. Furnish templates for use in woodwork shop.

C. Samples: Submit samples of any piece of equipment requested by Architect for review and approval.

D. Wiring Diagrams: Submit manufacturer's electrical requirements and wiring diagrams for power supply to units. Clearly differentiate between portions of wiring that are factory installed and field installed portions.

1.5 CODES AND STANDARDS

A. Uniform Plumbing Code (UPC) with State Amendments.

B. All fixtures and faucets must meet all requirements of Americans with Disabilities Act (ADA).

C. State Energy Code

1.6 DELIVERY, STORAGE, AND HANDLING

A. Deliver units to the site in containers with manufacturer's stamp or label affixed.

B. Store and protect products against dirt, water, chemical, and mechanical damage. Do not install damaged products. Remove damaged products from project site.

1.7 MAINTENANCE

A. Extra Stock:

1. Furnish special wrenches and other devices necessary for servicing plumbing fixtures, flush valves, and trim to Owner with receipt in a quantity of one device for each 10 fixtures.
2. Furnish faucet repair kits complete with all necessary washers, springs, pins, retainers, packings, o-rings, sleeves, and seats in a quantity of 1 kit for each 10 faucets.

PART 2 - PRODUCTS

2.1 GENERAL

A. Provide fixtures as specified. Fixtures in any secure or public areas shall be vandal proofed.

B. Architect/Engineer shall review and approve any substitution requested by Contractor prior to bid submittal.

C. Provide fixture as specified, acceptable manufacturers:

1. Vitreous China or Cast Iron Fixtures: American Standard, Eljer, Zurn or Kohler.

D. Provide faucet as specified. Acceptable manufacturers: Chicago Faucets, Zurn, Symmons, T and S or as indicated.

E. Provide a thermostatic mixing valve conforming to ASSE 1070 for all public lavatories and tub only fillers.

F. Provide commercial grade toilet seat as specified. Acceptable manufacturers: Beneke, Bemis, Church or Olsonite.

G. Provide heavy-duty cast iron commercial grade carrier as specified. Provide compact carriers where space is limited. Acceptable manufacturers: Ancon, Jay R. Smith, Wade or Zurn. No plastic parts on foundry items.

1. Wall hung urinal: J.R. Smith fig: 0634-M12 or Zurn Z-1221-58.
2. Wall hung lavatory: J.R. Smith fig: 0700(D) –M31 concealed arm carrier.

H. Provide heavy duty commercial grade 17-gauge P-Trap and supplies with stops as specified. Provide heavy duty commercial grade lavatory supplies. Provide supplies meeting AB1953 no lead requirements. Supplies shall be ½"x 3/8" x 12" ground joint flexible riser with loose key angle stop with chrome plates I.P.S. brass nipple. Sink supplies shall be ½" x 12" ground joint flexible riser with loose-key angle stop with chrome plated I.P.S. brass nipple. Provide bell type escutcheons for both P-trap and supplies. Acceptable manufacturers: Zurn, Brasscraft, Chicago, or McGuire.

1. P-trap - Lav: McGuire C8902-DF or Zurn Z-8701.
2. P-trap - Sink: McGuire C8912-DF or ZurnZ-8702.
3. Supply for Lavatory: McGuire LFH2165LK or Zurn ZH88-XL-LK.
4. Offset supply for barrier free lavatory: McGuire 158 WC.
5. Supply for Water Closet: McGuire H2169LK or Zurn ZH-8807-CR.
6. Escutcheons: McGuire WE00D Series, wrought brass, bell type.
7. Barrier-free lavatory offset grid strainer: McGuire 155WC or Zurn 8746.

I. Insulation: provide white molded closed cell vinyl pre-fab insulation on P-Trap and on both hot and cold water supply for barrier free lavatories and sinks. Acceptable manufacturers: Plumberex, True-Bro, and Zurn. Bag type insulators are not acceptable.

2.2 FIXTURE LISTING

A. WC-1 Water Closet – Barrier Free: See Plans.

B. L-1 Lavatory - Barrier Free: See Plans.

C. SH-1 Shower – Barrier Free: See Plans.

1. Fixture: See Architectural drawings for shower enclosure.
2. Faucet – ADA compliant: See Plans.
3. Drain: J.R. Smith 2005YA or Zurn

PART 3 - EXECUTION

3.1 GENERAL

A. Verify all dimensions by field measurements. Verify that all plumbing fixtures may be installed in accordance with pertinent codes and regulations, the original design, and the referenced standards.

B. Examine rough-in for potable water and waste piping systems to verify actual locations of piping connections prior to installing fixtures.

C. Examine walls, floors and cabinets for suitable conditions where fixtures are to be installed.

D. Install plumbing fixtures level and plumb, in accordance with fixture manufacturer's written instructions, rough-in drawings, and pertinent codes and regulations, the original design, and the referenced standards.

E. Comply with the installation requirements of ADA with respect to plumbing fixtures for the physically handicapped.

F. Fasten plumbing fixtures securely to supports or building structure. Secure supplies behind or within wall construction to provide rigid installation.

G. Install a stop valve in an accessible location in the water connection to each fixture.

H. Install escutcheons at each wall, floor, and ceiling penetration in exposed finished locations.

I. Seal fixtures to walls and floors using silicone sealant as specified in Division 07. Match sealant color to fixture color.

J. Test fixtures to demonstrate proper operation upon completion of installation and after units are water pressurized. Replace malfunctioning units, then retest.

K. Inspect each installed unit for damage. Replace damaged fixtures.

L. Adjust water pressure at faucets and shower valves to provide proper flow stream.

M. Replace washers or cartridges of leaking or dripping faucets and stops.

N. Clean fixtures, trim, and strainers using manufacturer's recommended cleaning methods and materials.

O. During construction cover all installed fixtures with cardboard boxes and wrap with Visqueen.

END OF SECTION

SECTION 230500

BASIC HVAC MATERIALS AND METHODS

PART 1 - GENERAL

1.01 APPLICABLE REQUIREMENTS

A. All work under this Section shall comply with the requirements of General Conditions, Supplemental Conditions, Special Conditions and Division 01 - General Requirements, and shall include all Mechanical Sections specified herein.

1.02 SCOPE OF THIS SECTION

A. All work to be furnished and installed under this Section shall comply with all the requirements of Division 01, and shall include, but not necessarily be limited to, the following:

1. Compliance with all codes and standards applicable to this jurisdiction.
2. Shop Drawings for Equipment
3. Coordination Documents
4. Record Drawings
5. Start-up Service and Building Commissioning
6. Instruction, Maintenance, and O & M Manuals
7. Work associated with Delivery, Storage, and Handling of products
8. Work associated with provision of Temporary Facilities
9. Preparation of Posted Operating Instructions
10. Meeting Project Safety and Indemnity requirements
11. Proper Cleaning and Closing
12. Supplying proper Warranty information
13. Supply specified Guarantee documentation
14. Design and provision of Supports and Anchors
15. Pipe Portals
16. Equipment Rails
17. Access Panels and Doors

18. Identification Markers

19. Coordination of Electrical requirements for equipment provided

1.03 DESCRIPTION OF WORK

A. The Contract Documents, including Specifications and Construction Drawings, are intended to provide all material and labor to install complete heating, ventilating, air conditioning systems for the building and shall interface with all existing building systems affected by new construction.

B. The Contractor shall refer to the architectural interior details, floor plans, elevations, and the structural and other Contract Drawings and he shall coordinate his work with that of the other trades to avoid interference. The plans are diagrammatic and show generally the locations of the fixtures, equipment, and pipe lines and are not to be scaled; all dimensions and existing conditions shall be checked at the building.

C. The Contractor shall comply with the project closeout requirements as detailed in General Requirements of Division 01.

D. Where project involves interface with existing building and site systems, every effort has been made to note existing utilities and services. However, the Contractor should thoroughly familiarize themselves with existing conditions and be aware that in some cases information is not available as to concealed conditions, which exist in portions of the existing building affected by this work.

1.04 DESCRIPTION OF BID DOCUMENTS

A. Specifications:

1. Specifications, in general, describe quality and character of materials and equipment.

2. Specifications are of simplified form and include incomplete sentences.

B. Drawings:

1. Drawings in general are diagrammatic and indicate sizes, locations, connections to equipment and methods of installation.

2. Before proceeding with work check and verify all dimensions.

3. Assume all responsibility for fitting of materials and equipment to other parts of equipment and structure.

4. Make adjustments that may be necessary or requested, in order to resolve space problems, preserve headroom, and avoid architectural openings, structural members and work of other trades.

5. Where existing pipes, conduits and/or ducts prevent installation of new work as indicated, relocate, or arrange for relocation, of existing pipes, conduits and/or ducts. Verify exact location and elevation of existing piping prior to any construction.

6. If any part of Specifications or Drawings appears unclear or contradictory, apply to Architect or Engineer for his interpretation and decision as early as possible, including during bidding period.

1.05 DEFINITIONS

A. "Above Grade": Not buried in the ground and not embedded in concrete slab on ground.

B. “Accessible”: Ability to perform recommended maintenance without removal of services or equipment and requiring no special platforms.

C. "Actuating" or "Control" Devices: Automatic sensing and switching devices such as thermostats, pressure, float, electro-pneumatic switches and electrodes controlling operation of equipment.

D. "Below Grade": Buried in the ground or embedded in concrete slab on ground.

E. "Concealed": Embedded in masonry or other construction, installed in furred spaces, within double partitions or hung ceilings, in trenches, in crawl spaces, or in enclosures. In general, any item not visible or directly accessible.

F. "Connect": Complete hook-up of item with required service.

G. "Exposed": Not installed underground or "concealed."

H. "Furnish": To supply equipment and products as specified.

I. "Indicated," "Shown" or " "Noted": As indicated, shown or noted on Drawings or Specifications.

J. "Install": To erect, mount and connect complete with related accessories.

K. "Motor Controllers": Manual or magnetic starters (with or without switches), individual push buttons or hand-off-automatic (HOA) switches controlling the operation of motors.

L. "Piping": Pipe, tube, fittings, flanges, valves, controls, strainers, hangers, supports, unions, traps, drains, insulation, and related items.

M. "Provide": To supply, install and connect as specified for a complete, safe and operationally ready system.

N. "Reviewed," "Satisfactory" or "Directed": As reviewed, satisfactory, or directed by or to Architect/Engineer/Owner.

O. "Rough-In": Provide all indicated services in the necessary arrangement suitable for making final connections to fixture or equipment.

P. "Shall": An exhortation or command to complete the specified task.

Q. "Similar" or "Equal": Of base bid manufacture, equal in materials, weight, size, design, and efficiency of specified products.

R. "Supply": To purchase, procure, acquire and deliver complete with related accessories.

S. “Typical” or “Typ”: Exhibiting the qualities, traits, or characteristics that identify a kind, class, number, group or category. Of or relating to a representative specimen. Application shall apply to all other similarly identified on plan or detail.

T. "Will": A desire to complete the specified task. Allows some flexibility in application as opposed to "Shall."

U. "Wiring": Raceway, fittings, wire, boxes and related items.

V. "Work": Labor, materials, equipment, apparatus, controls, accessories, and other items required for proper and complete installation.

1.06 RELATED WORK SPECIFIED ELSEWHERE

A. All Division 23 Mechanical sections included herein.

B. Division 33: Utility Site Work.

1. Coordination of excavation of trenches and the installation of mechanical systems and piping on site.

C. Division 03: Concrete.

1. All concrete work for Mechanical Division shall be included in Division 23 under the appropriate Sections and shall include:
   a. Concrete curbs and housekeeping pads for the mechanical equipment.
   b. Thrust blocks, pads, and boxes for mechanical equipment.
   c. Coordination of floor drain and floor sink installations in sloped floors.

D. Division 07: Thermal and Moisture Protection.

1. Flashing and sheet metal.

2. Sealants and caulking.

3. Firestopping.

E. Division 09: Painting:

1. Division 23 installers shall perform all painting, except where specifically stated otherwise in Division 09.

2. Painting of all exposed steel, piping, ductwork, insulation, equipment and materials.

3. Paint all exposed gas piping, interior and exterior to the building, yellow.

F. Division 10: Miscellaneous Metals.

1. Exterior louvers and grilles shall be included in this Section.

G. Division 26: Electrical is related to work of:

1. Power connections to all mechanical equipment.

H. Division 28: Electronic Safety and Security is related to work of:

1. Fire protection alarms and relays.

2. Smoke detector and monitoring.

3. Life Safety Systems.

1.07 CODES AND STANDARDS

A. The Contractor is cautioned that code requirements not explicitly detailed in these specifications or drawings, but which may be reasonably inferred or implied from the nature of the project, must be provided as part of the contract.

B. Perform all tests required by governing authorities and required under all Division 23 Sections. Provide written reports on all tests.

C. Electrical devices and wiring shall conform to the latest standards of NEC; all devices shall be UL listed and labeled.

D. All mechanical work shall comply with the Americans with Disabilities Act (ADA).

E. All excavation work must comply with all provisions of state laws including notification to all owners of underground utilities at least 48 business day hours, but not more than 10 business days, before commencing an excavation.

F. Provide in accordance with rules and regulations of the following:

1. Building Codes enforced by the Authority Having Jurisdiction in California:
   a. 2010 California Building Code (CBC) based 2009 International Building Code (IBC) with State Amendments.
   b. 2010 California Mechanical Code (CMC) based 2009 Uniform Mechanical Code (UMC) with State Amendments.
   c. 2010 California Plumbing Code (CPC) based 2009 Uniform Plumbing Code (UPC) with State Amendments.
   d. 2010 California Fire Code (CFC) based 2009 International Fire Code (IFC) with State Amendments.
   e. 2010 California Electric Code (CEC) based 2008 National Electric Code with State Amendments.
   f. 2008 Title 24, Part 6 California Energy Efficiency Standards for Residential and Nonresidential Buildings
   g. 2010 California Green Building Standards Code

2. Local, city, county and state codes and ordinances.

3. Local Bureau of Buildings.

4. Local Health Department.

5. Local and State Fire Prevention Districts.

6. California Administrative Code Title 24.

G. Provide in accordance with appropriate referenced standards of the following:

1. NFPA - National Fire Protection Association.

2. AABC - Associated Air Balance Council.

3. CSA - Canadian Standards Association.

4. ADC - Air Diffuser Council.

5. AMCA - Air Moving and Conditioning Association.

6. ANSI - American National Standards Institute.

7. ARI - Air Conditioning and Refrigeration Institute.

8. ASHRAE - American Society of Heating, Refrigerating & Air Conditioning Engineers.

9. ASME - American Society of Mechanical Engineers.

10. ASTM - American Society for Testing Materials.

11. AWS - American Welding Society.

12. FM - Factory Mutual.

13. MSS - Manufacturer's Standardization Society.

14. NEMA - National Electrical Manufacturer's Association.

15. SMACNA - Sheet Metal and Air Conditioning Contractors National Association.

16. UL - Underwriter's Laboratories.

17. ADA - Americans with Disabilities Act.

18. ETL - Electrical Testing Laboratories.

1.08 QUALITY ASSURANCE

A. Manufacturer's Nameplates: Nameplates on manufactured items shall be aluminum or Type 304 stainless steel sheet, not less than 20 USG (0.0375”), riveted or bolted to the manufactured item, with nameplate data engraved or punched to form a non-erasable record of equipment data.

B. Current Models. All work shall be as follows:

1. Manufactured items furnished shall be the current, cataloged product of the manufacturer.

2. Replacement parts shall be readily available and stocked in the USA.

C. Experience: Unless more stringent requirements are specified in other sections of Division 23, manufactured items shall have been installed and used, without modification, renovation or repair, on other projects for not less than one year prior to the date of bidding for this project.

1.09 GENERAL REQUIREMENTS

A. Examine all existing conditions at building site.

B. Review contract documents and technical specifications for extent of new work to be provided.

C. Provide and pay for all permits, licenses, fees and inspections.

D. Prepare a Construction IAQ Management Plan meeting the SMACNA IAQ guidelines. See Section 233113 Air Distribution for a summary of requirements.

E. Install equipment and materials to provide required access for servicing and maintenance. Coordinate the final location of concealed equipment and devices requiring access with final location of required access panels and doors. Allow ample space for removal of all parts that require replacement or servicing. This work shall include furnishing and installing all access doors required for mechanical access.

F. Verify final locations for rough-ins with field measurements and with the requirements of the actual equipment to be connected. Refer to Equipment Specifications in Divisions 02 through 16 for rough-in requirements.

G. Coordinate mechanical equipment and materials installation with other building components.

H. Verify all dimensions by field measurements.

I. Arrange for chases, slots, and openings in other building components to allow for mechanical installations.

J. Coordinate the installation of required supporting devices and sleeves to be set in poured-in-place concrete and other structural components, as they are constructed.

K. Sequence, coordinate, and integrate installations of mechanical materials and equipment for efficient flow of the work. Give particular attention to large equipment requiring positioning prior to closing-in the building.

L. Coordinate the cutting and patching of building components to accommodate the installation of mechanical equipment and materials. Contractor to provide for all cutting and patching required for installation of his work unless otherwise noted.

M. Where mounting heights are not detailed or dimensioned, install mechanical services and overhead equipment to provide the maximum headroom possible.

N. Install mechanical equipment to facilitate maintenance and repair or replacement of equipment components. Connect equipment for ease of disconnecting, without interference with other installations.

O. Coordinate the installation of mechanical materials and equipment above ceilings with ductwork, piping, conduits, suspension system, light fixtures, cable trays, sprinkler piping and heads, and other installations.

P. Coordinate connection of mechanical systems with exterior underground and overhead utilities and services. Comply with requirements of governing regulations, franchised service companies, and controlling agencies. Provide required connection for each service.

Q. Coordinate with Owner in advance to schedule shutdown of existing systems to make new connections. Provide valves in new piping to allow existing system to be put back in service with minimum down time.

R. All materials (such as insulation, ductwork, piping, wiring, controls, etc.) located within air plenum spaces, air shafts, and occupied spaces shall have a flame-spread index of 25 or less, and smoke-developed index of 50 or less, as tested by ASTM E84 (NFPA 255) Method. In addition, the products,

when tested, shall not drip flame particles, and flame shall not be progressive. Provide Underwriters Laboratories, Inc., label or listing, or satisfactory certified test report from an approved testing laboratory to prove the fire hazard ratings for materials proposed for use do not exceed those specified.

S. Coordinate installation of floor drains and floor sinks with work of other trades, such that finished floor slopes to drains and floor sinks are flush with surrounding floor.

T. Products made of or containing lead, asbestos, mercury or other known toxic or hazardous materials are not acceptable for installation under this Division. Any such products installed as part of the work of the Division shall be removed and replaced and all costs for removal and replacement shall be borne solely by the installing Contractor.

1.10 MINOR DEVIATIONS

A. The Drawings are diagrammatic and show the general arrangements of all mechanical work and requirements to be performed. It is not intended to show or indicate all offsets, fittings, and accessories which will be required as a part of the work of this Section.

B. The Contractor shall review the structural and architectural conditions affecting his work. It is the specific intention of this section that the contractor's scope of work shall include

1. Proper code complying support systems for all equipment whether or not scheduled or detailed on drawings or in these specifications

2. Minor deviations from the mechanical plans required by architectural and structural coordination.

C. The Contractor shall study the operational requirements of each system, and shall arrange his work accordingly, and shall furnish such fittings, offsets, supports, accessories, as are required for the proper and efficient installation of all systems from the physical space available for use by this section. This requirement extends to the Contractor's coordination of this section's work with the "Electrical Work." Should conflicts occur due to lack of coordination, the time delay, cost of rectification, demolition, labor and materials, shall be borne by the Contractor and shall not be at a cost to the Owner.

D. Minor deviations in order to avoid conflict shall be permitted where the design intent is not altered.

E. Advise the Architect, in writing, in the event a conflict occurs in the location or connection of equipment. Bear all costs for relocation of equipment, resulting from failure to properly coordinate the installation or failure to advise the Architect of conflict.

1.11 PRODUCT SUBSTITUTIONS

A. The Contractor shall certify the following items are correct when using substituted products other than those scheduled or shown on the drawings as a basis of design:

1. The proposed substitution does not affect dimensions shown on drawings.

2. The Contractor shall pay for changes to building design, including engineering design, detailing, structural supports, and construction costs caused by proposed substitution.

3. The proposed substitution has no adverse effect on other trades, construction schedule, or specified warranty requirements.

4. Maintenance and service parts available locally are readily obtainable for the proposed substitute.

B. The Contractor further certifies function, appearance, and quality of proposed substitution are equivalent or superior to specified item.

C. The Contractor agrees that the terms and conditions for the substituted product that are found in the contract documents apply to this proposed substitution.

1.12 SHOP DRAWINGS AND EQUIPMENT SUBMITTALS

A. Prior to construction submit for review all materials and equipment in accordance with Division 01 requirements.

B. After approval of preliminary list of materials, the Contractor shall submit Shop Drawings and manufacturer's Certified Drawings to the Architect for approval.

C. The Contractor shall submit approved Shop Drawings and manufacturer's equipment cuts, of all equipment requiring connection by Division 26, to the Electrical Contractor for final coordination of electrical requirements. Contractor shall bear all additional costs for failure to coordinate with Division 26.

D. Submittals and Shop Drawings shall be submitted as a complete package bound in a 3-ring binder with tabs for each specification section. The approved submittals shall be converted into Operations & Maintenance Manuals at the completion of the project. Submit six (6) typed copies of submittals. Refer to Division 01 for additional requirements.

1.13 COORDINATION DOCUMENTS

A. The Contractors shall prepare coordinated Shop Drawings to coordinate the installation and location of all HVAC equipment, ductwork, grilles, diffusers, piping, fire sprinklers, lights, audio/video systems, electrical services and all system appurtenances. The Drawings shall include all mechanical rooms and floor plans. The Drawings shall be Overlay Drawings showing each discipline on a single sheet. The Drawings shall be keyed to the structural column identification system, and shall be progressively numbered. Prior to completion of the Drawings, the Contractor shall coordinate the proposed installation with the Architect and the structural requirements, and all other trades (including HVAC, Plumbing, Fire Protection, Electrical, Ceiling Suspension, and Tile Systems), and provide reasonable maintenance access requirements. When conflicts are identified, modify system layout as necessary to resolve. Do not fabricate, order or install any equipment or materials until coordination documents are approved by the General Contractor, Architect, and Owner. Within thirty (30) days after award of Contract, submit proposed coordination document Shop Drawing schedule, allowing adequate time for review and approval by parties mentioned above. Drawings should be prepared and submitted for approval on a floor-by-floor basis to phase with building construction.

B. The Drawings shall be prepared as follows:

1. The Sheet Metal (Mechanical) Contractor shall prepare Drawings to an accurate scale of 1/4" = 1'-0" or larger, on reproducible media sheets (vellum) or AutoCAD disks. Obtain reproducibles or AutoCAD files of the HVAC design from the Architect, or Engineer, at cost plus. Drawings are to be same size as Contract Drawings and shall indicate location, size and

elevation above finished floor, of all HVAC equipment, ductwork, and piping. Plans shall also indicate proposed ceiling grid and lighting layout, as shown on electrical plans and reflected ceiling plans.

2. The Plumbing Contractor shall obtain reproducible plans or AutoCAD disks from the Mechanical Contractor, and indicate all plumbing lines including fittings, hangers, access panels, valves, and bottom of pipe elevations above finished floor.

3. The Fire Protection Contractor shall obtain reproducible plans or AutoCAD disks with the detailed mechanical and plumbing work shown. The Sprinkler Contractor shall indicate location of all sprinkler heads and piping, including valves and fittings, dimensions from column lines, and bottom of pipe elevations above finished floor.

4. Plans are to incorporate all addenda items and change orders.

5. Distribute plans to all trades and provide additional coordination as needed.

C. Advise the Architect in the event a conflict occurs in the location or connection of equipment. Bear all costs for relocation of equipment, resulting from failure to properly coordinate the installation or failure to advise the Architect of conflict.

D. Provide means of access to all valves, dampers, controllers, operable devices, and other apparatus that may require adjustment or servicing.

E. Verify in field exact size, location, invert, and clearances regarding all existing material, equipment and apparatus, and advise the Architect of any discrepancies between those indicated on the Drawings and those existing in the field prior to any installation related thereto.

F. Final Coordination Drawings with all appropriate information added are to be submitted as Record Drawings at completion of project.

G. Provide copy of Record Drawings to Testing and Balancing Contractor for their use when doing their work.

1.14 RECORD DRAWINGS

A. Before commencing installation, obtain an extra set of prints from Architect, marked "Record." Keep this set of Drawings at the job site at all times, and use it for no other purpose but to mark on it all the changes and revisions to the Contract Drawings resulting from coordination with other trades. At the completion of the project,

1. Obtain a clean set of reproducibles from the Architect or Engineer, at cost plus, and transfer the revisions to these reproducibles in a neat and orderly fashion.

OR

2. Edit project AutoCAD files to incorporate all site markups, changes, and revisions to the Contract Drawings. Submit plots of Record Drawings and six copies CD Roms labeled with all record AutoCAD drawing files.

B. Provide copy of Record Drawings to Testing and Balancing Contractor for use when doing his work.

C. Mark Drawings to indicate revisions to piping and ductwork, size and location both exterior and interior; including locations of coils, dampers and other control devices, filters, boxes and similar units

requiring periodic maintenance or repair; actual equipment locations, dimensioned from column lines; actual inverts and locations of underground piping; concealed equipment, dimensioned to column lines; mains and branches of piping systems, with valves and control devices located and numbered, concealed unions located, and with items requiring maintenance located (i.e. – valves, traps, strainers, expansion compensators, tanks, etc.); Change Orders; concealed control system devices.

D. Mark Specifications to indicate approved substitutions; Change Orders; actual equipment and materials used.

E. Refer also to Special Conditions in Division 01 for full scope of requirements.

1.15 START-UP SERVICE

A. Prior to start-up, be assured that systems are ready, including checking the following: Proper equipment rotation, proper wiring, auxiliary connections, lubrication, venting, controls, and installed and properly set relief and safety valves.

B. Provide services of factory-trained technicians for start-up of air conditioning units, temperature controls, chillers, boilers, pumps, and other major pieces of equipment. Certify in writing compliance with this Paragraph, stating names of personnel involved and the date work was performed.

C. Provide certificates of calibration for all sensors required for control and monitoring including temperature and pressure.

D. Refer to other Division 23 Sections for additional requirements.

1.16 INSTRUCTION, MAINTENANCE, AND O&M MANUALS

A. O&M Manuals: Upon completion of the work, and prior to training of Owner's personnel, the Contractor shall submit to the Architect complete set of operating instructions, maintenance instructions, part lists, and all other bulletins and brochures pertinent to the operation and maintenance for equipment furnished and installed as specified in this section, bound in a durable binder. Refer to Division 01.

B. Contractor shall be responsible for providing proper instruction of the of Owner's personnel for operation and maintenance of equipment, and apparatus installed as specified in Division 23 to be no less than two hours for each piece of equipment. The Contractor shall develop and submit training materials prior to this training. These materials shall include qualifications of the trainer, training agenda, learning objectives, and a written test to be administered at the end of the training session. Operation and Maintenance manuals must present, incorporated and referenced in the training sessions.

1.17 DELIVERY, STORAGE AND HANDLING

A. Deliver products to project properly identified with names, model numbers, types, grades, compliance labels, and similar information needed for distinct identifications; adequately packaged and protected to prevent damage during shipment, storage, and handling.

B. Store equipment and materials in an environmentally controlled area at the site, unless off-site storage is authorized in writing. Protect stored equipment and materials from damage. Piping shall be stored in bundles covered with visqueen. Piping showing signs of rust shall be removed from site and replaced.

C. Coordinate deliveries of mechanical materials and equipment to minimize construction site congestion. Limit each shipment of materials and equipment to the items and quantities needed for the smooth and efficient flow of installations.

1.18 TEMPORARY FACILITIES

A. Refer to Division 01 for the requirements of temporary water and sewer for construction and safety. Provide temporary heating, air conditioning, ventilation, water, and sewer, etc. services as necessary during the construction period and as required to maintain operation of existing systems.

B. Temporary Heating for Commissioning Tests:

1. Provide temporary heating where needed to provide false load for commissioning tests.

2. Temporary heating may be from the permanent heating system of the project or from a dedicated temporary heating system. If temporary system is necessary, select facilities known to be safe and without deleterious effect upon what work in place or being installed.

C. Temporary Cooling for Commissioning Tests:

1. Provide temporary cooling where needed to provide false load for commissioning tests.

2. Temporary cooling may be from the permanent cooling system of the project or from a dedicated temporary cooling system. If temporary system is necessary, select facilities known to be safe and without deleterious effect upon the work in place or being installed.

1.19 POSTED OPERATING INSTRUCTIONS

A. Furnish approved operating instructions for systems and equipment indicated in the technical sections for use by operation personnel. The operating instructions shall include wiring diagrams, control diagrams, and control sequence for each principal system and equipment. Print or engrave operating instructions and frame under glass or in approved laminated plastic. Post instructions where directed. Attach or post operating instructions adjacent to each principal system and equipment including start-up, operating, shutdown, safety precautions and procedure in the event of equipment failure. Provide weather-resistant materials or weatherproof enclosures for operating instructions exposed to the weather. Operating instructions shall not fade when exposed to sunlight and shall be secured to prevent easy removal.

1.20 SAFETY AND INDEMNITY

A. The Contractor shall be solely and completely responsible for conditions of the job site including safety of all persons and property during performance of the work. This requirement will apply continuously and not be limited to normal hours of work.

B. No act, service, Drawing, review, or Construction Review by the Owner, Architect, the Engineers or their consultants, is intended to include the review of the adequacy of the Contractor's safety measures, in, on, or near the construction site.

C. The Contractor performing work under this Division of the Specifications shall hold harmless, indemnify and defend the Owner, the Architect, the Engineers and their consultants, and each of their officers, employees and agents from any and all liability claim, losses or damage arising, or alleged to arise from bodily injury, sickness, or death of a person or persons, and for all damages arising out

of injury to or destruction of property arising directly or indirectly out of, or in connection with, the performance of the work under the Division of the Specifications, and from the Contractor's negligence in the performance of the work described in the Construction Contract Documents; but not including the sole negligence of the Owner, the Architect, the Engineers, and their consultants or their officers, employees and agents.

1.21 CLEANING AND CLOSING

A. All work shall be inspected, tested, and approved before being concealed or placed in operation.

B. Upon completion of the work, all equipment installed as specified in this section, and all areas where work was performed, shall be cleaned to provide operating conditions satisfactory to the Architect.

1.22 WARRANTIES

A. All equipment shall be provided with a minimum one-year warranty to include parts and labor. Refer to individual Equipment Specifications for extended or longer-term warranty requirements.

B. Provide complete warranty information for each item, to include product or equipment, date of beginning of warranty or bond; duration of warranty or bond; and names, addresses, telephone numbers and procedures for filing a claim and obtaining warranty services.

C. Service during warranty period: Contractor shall provide maintenance as specified elsewhere during the 12-month warranty period.

1.23 GUARANTEE

A. The Contractor shall guarantee and service all workmanship and materials to be as represented by him and shall repair or replace, at no additional cost to the Owner, any part thereof which may become defective within the period of one (1) year after the Date of Final Acceptance, ordinary wear and tear excepted.

B. Contractor shall be responsible for and pay for any damages caused by or resulting from defects in his work.

PART 2 - PRODUCTS

2.01 GENERAL

A. Furnish and install all new material, equipment, and apparatus hereinafter specified unless specifically noted otherwise. All material, equipment, and apparatus shall be identified by the manufacturer's name, nameplate, and pertinent data.

B. All materials, equipment, and apparatus are mentioned as standards unless noted otherwise. The words "or approved equal" shall be considered to be subsequent to all manufacturers' names used herein, unless specifically noted that substitutes are not allowed.

2.02 SUPPORTS AND ANCHORS

A. General: Comply with applicable codes pertaining to product materials and installation of supports and anchors, including, but not limited to, the following:

1. UL and FM Compliance: Provide products, which are UL listed and FM approved.

2. ASCE 7-05: “American Society of Civil Engineers.”

3. 2006 International Building Code (IBC)

4. MSS Standard Compliance: Manufacturer's Standardization Society (MSS).

5. SMACNA: "Seismic Restraint Manual: Guidelines for Mechanical Systems."

6. NFPA: Pamphlet number 13 and 14 for fire protection systems.

7. Provide copper plated or plastic coated supports and attachment for copper piping systems. Field applied coatings or tape is unacceptable.

8. Manufacturer: B-Line, Grinnell, Michigan, Tolco, Kin-Line, Simpson, or Superstrut.

B. Horizontal Piping Hangers and Supports: Except as otherwise indicated, provide factory-fabricated hangers and supports of one of the following MSS types listed.

1. Adjustable Steel Clevis Hangers: MSS Type 1.

2. Adjustable Steel Swivel Band Hangers: MSS Type 10.

3. U-Bolts: MSS Type 24.

4. Pipe Slides and Slide Plates: MSS Type 35, including one of the following plate types:
   a. Plate: Unguided type.
   b. Plate: Guided type.
   c. Plate: Hold-down clamp type.

5. Pipe Saddle Supports: MSS Type 36, including steel pipe base support and cast iron floor flange.

6. Pipe Saddle Supports with U-Bolt: MSS Type 37, including steel pipe base support and cast iron floor flange.

7. Adjustable Pipe Saddle Supports: MSS Type 38, including steel pipe base support and cast iron floor flange.

8. Single Pipe Roller with Malleable Sockets: MSS Type 41.

9. Adjustable Roller Hangers: MSS Type 43.

10. Pipe Roll Stands: MSS Type 44.

11. Pipe Guides: Provide factory-fabricated guides of cast semi-steel or heavy fabricated steel, consisting of a bolted two-section outer cylinder and base with a two-section guiding spider bolted tight to pipe. Size guide and spiders to clear pipe and insulation (if any), and cylinder. Provide guides of length recommended by manufacturer to allow indicated travel.

C. Vertical Piping Clamps: Provide factory-fabricated two-bolt vertical piping riser clamps, MSS Type 8.

D. Hanger-Rod Attachments: Except as otherwise indicated, provide factory-fabricated hanger-rod attachments of one of the following MSS types listed.

1. Steel Turnbuckles: MSS Type 13.

2. Steel Clevises: MSS Type 14.

3. Swivel Turnbuckles: MSS Type 15.

4. Malleable Iron Eye Sockets: MSS Type 16.

5. Steel Weldless Eye Nuts: MSS Type 17.

E. Building Attachments: Except as otherwise indicated, provide factory-fabricated building attachments of one of the following types listed.

1. Concrete Inserts: MSS Type 18 or Blue Banger Hanger by Simpson

2. Steel Brackets: One of the following for indicated loading:
   a. Light Duty: MSS Type 31.
   b. Medium Duty: MSS Type 32.
   c. Heavy Duty: MSS Type 33.

3. Horizontal Travelers: MSS Type 58.

4. Internally Threaded Expansion Shell Anchors: By Simpson or approved equal.

5. Concrete Screw Anchors: Titen HD by Simpson or approved equal.

F. Saddles and Shields: Except as otherwise indicated, provide saddles or shields under piping hangers and supports, factory-fabricated, for all insulated piping. Size saddles and shields for exact fit to mate with pipe insulation.

1. Pipe Covering Protection Saddles: MSS Type 39; fill interior voids with segments of insulation matching adjoining insulation.

2. Insulation Protection Shields: MSS Type 40, 18” minimum, or of the length recommended by manufacturer to prevent crushing of insulation. High-density insulation insert lengths shall match or exceed shield length.

3. Thermal Hanger Shields: Constructed of 360° insert of waterproofed calcium silicate (60 psi flexural strength minimum) encased in 360° sheet metal shield. Provide assembly of same thickness as adjoining insulation. Shield length shall match or exceed length of calcium silicate insert.

G. Miscellaneous Materials:

1. Metal Framing: Provide products complying with NEMA STD ML1.

2. Steel Plates, Shapes, and Bars: Provide products complying with ASTM A36.

3. Cement Grout: Portland Cement (ASTM C150, Type I or Type III) and clean uniformly graded, natural sand (ASTM C404, Size No. 2). Mix at a ratio of 1.0 part cement to 3.0 parts sand by volume, with minimum amount of water required for placement and hydration.

4. Heavy-Duty Steel Trapezes: Fabricate from steel shapes selected for loads required. Weld steel in accordance with AWS standards.

5. Pipe Brackets: "HoldRite" copper plated brackets. Insulate brackets attached to metal studs with felt.

2.03 EQUIPMENT/PIPING RAILS

A. Where equipment/pipe rails are not provided by other sections of Specification, provide prefabricated reinforced equipment rails as required for support of equipment and piping. Field built curbs are acceptable alternatives - provide detail of construction for review.

B. Standard equipment rail, unless otherwise noted, shall be constructed as follows:

1. Construct of heavy gauge galvanized steel with continuous welds on shell seams.

2. Provide internal reinforcing supports welded as required to meet application requirements.

3. Equipment rails to have raised 3” (minimum), 45° cant.

4. Equipment rails to have 1 1/2" x 1 1/2" wood nailer (minimum) and counterflashing.

5. Equipment rail height to be 6” (minimum) above roof deck.

6. Cant shall be raised to match roof insulation thickness.

C. Equipment rails to be constructed to meet equipment size and weight requirements. Provide tapered rails to match roof pitch where required.

D. Manufacturer: Pate, Vent Products, Thy Curb or Roof Products Systems.

2.04 ACCESS PANELS AND ACCESS DOORS

A. Provide all access doors and panels to serve equipment under this work, including those which must be installed, in finished architectural surfaces. Frame of 16-gauge steel, door of 20 gauge steel. 1” flange width, continuous piano hinge, key operated, prime coated. Refer to Architectural Specifications for the required product Specification for each surface. Contractor is to submit schedule of access panels for approval. Exact size, number and location of access panels is not shown on Plans. Access doors shall be of a size to permit removal of equipment for servicing. Access door shall have same rating as the wall or ceiling in which it is mounted. Provide access panel for each trap primer or concealed valve, for fire and combination fire/smoke dampers, and for volume dampers. Use no panel smaller than 12" x 12” for simple manual access, or smaller than 24" x 24" where personnel must pass through. Provide cylinder lock for access door serving mixing or critical valves in public areas.

B. Included under this work is the responsibility for verifying the exact location and type of each access panel or door required to serve equipment under this work and in the proper sequence to keep in tune with construction and with prior approval of the Architect. Access doors in fire rated partitions and ceilings shall carry all label ratings as required to maintain the rating of the rated assembly.

C. Acceptable Manufacturers: Milcor, Karp, Nystrom, or Elmdor/Stoneman.

D. Submit markup of architectural plans showing size and location of access panels required for equipment access for approval by Architect.

2.05 IDENTIFICATION MARKERS

A. Mechanical Identification Materials: Provide products of categories and types required for each application as referenced in other Division 23 Sections. Where more than single type is specified for application, selection is installer's option, but provide single selection for each product category. Stencils are not acceptable.

B. Plastic Pipe Markers:

1. Snap-On Type: Provide pre-printed, semi-rigid snap-on, color coded pipe markers, complying with ANSI A13.1.

2. Pressure Sensitive Type: Provide pre-printed, permanent adhesive, color coded, pressure sensitive vinyl pipe markers, complying with ANSI A13.1. Secure both ends of markers with color coded adhesive vinyl tape.

3. Insulation: Furnish 1” thick molded fiberglass insulation with jacket for each plastic pipe marker to be installed on uninsulated pipes subjected to fluid temperatures of 125°F (52°C) or greater. Cut length to extend 2” beyond each end of plastic pipe marker.

4. Arrows: Print each pipe marker with arrows indicating direction of flow, either integrally with piping system service lettering (to accommodate both directions), or as separate unit of plastic.

C. Plastic Duct Markers:

1. Provide 4 1/2” x 6” laminated plastic, ANSI A13.1 color coded duct markers with white core lettering.

2. Nomenclature: Include the following:
   a. Direction of air flow.

3. Duct service (supply, return, exhaust, etc.).
   a. Duct origin (from).
   b. Duct destination (to).
   c. Design cfm.

4. Provide a minimum of every 20 feet on all ducts with a diameter or width greater than 12”.

D. Underground-Type Plastic Line Markers: Provide 6” wide x 4 mils thick multi-ply tape, consisting of solid metallic foil core between 2 layers of plastic tape. Markers to be permanent, bright colored, continuous printed, intended for direct burial service.

E. Valve Tags:

1. Brass Valve Tags: Provide 1 1/2" diameter 19-gauge polished brass valve tags with stamp-engraved piping system abbreviation in 1/4” high letters and sequenced valve numbers 1/2” high, and with 5/32” hole for fastener. Fill tag engraving with black enamel.

2. Plastic Laminate Valve Tags: Provide 3/32” thick engraved plastic laminate valve tags, with piping system abbreviations in 1/4" high letters and sequenced valve number 1/2" high, and with 5/32” hole for fasteners.

3. Valve Tag Fasteners: Provide solid brass chain (wire link or beaded type), or solid brass S-hooks of the sizes required for proper attachment of tags to valves, and manufactured specifically for that purpose.

4. Access Panel Markers: Provide 1/16” thick engraved plastic laminate access panel markers, with abbreviations and numbers corresponding to concealed valve. Include 1/8” center hole to allow attachment.

5. Non-potable Water Tags: 1/16” thick, engraved, plastic tags as indicated on Drawings.

F. Plastic Equipment Signs:

1. Provide 4-1/2” x 6” plastic laminate sign, ANSI A.13 color coded with engraved white core lettering.

2. Fasteners: Self-tapping stainless steel screws, except contact-type permanent adhesive where screws cannot or should not penetrate the substrate.

3. Nomenclature: Include the following, matching terminology on schedules as closely as possible:
   a. Name and plan number.
   b. Equipment service.
   c. Design capacity.
   d. Other design parameters, such as pressure drop, entering and leaving conditions, rpm, etc.

G. Acceptable Manufacturers: Craftmark, Seton, Brady, Marking Services, Inc., or Brimar.

2.06 ELECTRICAL

A. General:

1. All electrical material, equipment, and apparatus specified herein shall conform to the requirements of Division 26.

2. Provide all motors for equipment specified herein. Provide motor starters, controllers, and other electrical apparatus and wiring which are required for the operation of the equipment specified herein.

3. Set and align all motors and drives in equipment specified herein.

4. Provide expanded metal or solid sheet metal guards on all V-belt drives to totally enclose the drive on all sides. Provide holes for tachometer readings. Support guards separately from rotating equipment.

5. Provide for all rotating shafts, couplings, etc., a solid sheet metal, inverted "U" cover over the entire length of the exposed shaft and support separately from rotating equipment. Cover shall extend to below the bottom of the shaft and coupling, and shall meet the requirements of the State Industrial Safety Regulations.

6. Specific electrical requirements (i.e., horsepower and electrical characteristics) for mechanical equipment are scheduled on the Drawings.

B. Quality Assurance:

1. Electrical components and materials shall be UL or ETL listed/labeled as suitable for location and use - no exceptions.

C. Motors:

1. The following are basic requirements for simple or common motors. For special motors, more detailed and specific requirements are specified in the individual equipment Specifications.

2. Torque characteristics shall be sufficient to satisfactorily accelerate the driven loads.

3. Motor sizes shall be large enough so that the driven load will not require the motor to operate in the service factor range. Unless otherwise noted on plans, all motors ½ HP or larger shall be rated for 208 or 460 volt, 3-phase, operation. Unless otherwise noted on plans, all motors less than 1/2 HP shall be rated for 120 volt, single phase operation.

4. Temperature Rating: Motor meets class B rise with class F insulation.

5. Service Factor: 1.15 for poly-phase motors and 1.35 for single phase motors.

6. Motor Construction: NEMA Standard MG 1, general purpose, continuous duty, Design "B", except "C" where required for high starting torque.
   a. Frames: NEMA Standard No. 48 or 56; use driven equipment manufacturer's standards to suit specific application.
   b. VFD driven motors to be provided rated for inverter duty (NEMA Standard MG-1, Part 31) and equipped with a shaft grounding device or as an insulated bearing motor.
   c. Bearings:
      1) Ball or roller bearings with inner and outer shaft seals.
      2) Re-greasable, except permanently sealed where motor is normally inaccessible for regular maintenance.
      3) Designed to resist thrust loading where belt drives or other drives product lateral or axial thrust in motor.
      4) For fractional horsepower, light duty motors, sleeve type bearings are permitted.
      5) Enclosure Type:
         a) Open drip-proof motors for indoor use where satisfactorily housed or remotely located during operation.
         b) Guarded drip-proof motors where exposed to contact by employees or building occupants.
         c) Weather protected Type I for outdoor use, Type II where not housed.
   d. Overload Protection: Built-in thermal overload protection where external overload protection is not provided and, where indicated, internal sensing device suitable for signaling and stopping motor at starter.
   e. Noise Rating: "Quiet."
   f. Efficiency:
      1) Motors shall have a minimum efficiency per governing State or Federal codes, whichever is higher.
      2) Motors shall meet the NEMA premium efficiency standard
   g. Nameplate: Indicate the full identification of manufacturer, ratings, characteristics, construction, special features and similar information.

D. Starters and Electrical Devices:

1. Motor Starter Characteristics:
   a. Enclosures: NEMA 1, general purpose enclosures with padlock ears, except in wet locations shall be NEMA 3R with conduit hubs.
   b. Type and size of starter shall be as recommended by motor manufacturer and the driven equipment manufacturer for applicable protection and start-up condition.

2. Manual switches shall have pilot lights and all required switch positions for multi-speed motors. Overload Protection: Melting alloy or bi-metallic type thermal overload relays, sized according to actual operating current (field measured).

3. Magnetic Starters:
   a. Heavy duty, oil resistant, hand-off-auto (HOA), or as indicated, and pilot lights, properly arranged for single speed or multi-speed operation as indicated.
   b. Trip-free thermal overload relays, each phase, sized according to actual operating current (field measured).
   c. Interlocks, pneumatic switches and similar devices as required for coordination with control requirements of Division 23 Controls sections.
   d. Built-in primary and secondary fused control circuit transformer, supplied from load side of equipment disconnect.
   e. Externally operated manual reset.
   f. Under-voltage release or protection for all motors over 20 hp.

4. Motor Connections: Liquid tight, flexible conduit, except where plug-in electrical cords are specifically indicated.

E. Low Voltage Control Wiring:

1. General: 14 gauge, Type THHN, color coded, installed in conduit.

2. Manufacturer: General Cable Corp., Alcan Cable, American Insulated Wire Corp., Senator Wire and Cable Co., or Southwire Co.

F. Disconnect Switches:

1. Fusible Switches: For equipment 1/2 HP or larger, provide fused, each phase; heavy duty; horsepower rated; spring loaded quick-make, quick-break mechanism; dead front line side shield; solderless lugs suitable for copper or aluminum conductors; spring reinforced fuse clips; electro silver plated current carrying parts; hinged doors; operating lever arranged for locking in the "OPEN" position; arc quenchers; capacity and characteristics as indicated.

2. Non-Fusible Switches: For equipment less than 1/2 horsepower, switch shall be horsepower rated; toggle switch type with thermal overload quantity of poles and voltage rating as required.

PART 3 - EXECUTION

3.01 GENERAL

A. Workmanship shall be performed by licensed journeymen or master mechanics and shall result in an installation consistent with the best practices of trades.

B. Install work uniform, level and plumb, in relationship to lines of building. Do not install any diagonal, or otherwise irregular work unless so indicated on Drawings or approved by Architect.

3.02 MANUFACTURER'S DIRECTIONS

A. Follow manufacturers' directions and recommendations in all cases where the manufacturers of articles used on this Contract furnish directions covering points not shown on the Drawings or covered in these Specifications.

1. If the contractor must deviate from the manufacturer's recommendations provide a letter from the manufacturer indicating the clearance to be provided is acceptable for scheduled performance and maintenance.

3.03 INSTALLATION

A. Coordinate the work between the various Mechanical Sections and with the work specified under other Divisions. If any cooperative work must be altered due to lack of proper supervision or failure to make proper and timely provisions, the alternations shall be made to the satisfaction of the Engineer and at the Contractor's cost. Coordinate wall and ceiling work with the General Contractor, and his subcontractors in locating ceiling air outlets, wall registers, etc.

B. Inspect all material, equipment, and apparatus upon delivery and do not install any damaged or defected materials.

3.04 SUPPORTS AND HANGERS

A. Prior to installation of hangers, supports, anchors, and associated work, installer shall meet at project site with Contractor, installer of each component of associated work, inspection and testing agency representatives, (if any), installers of other work with requirements specified.

B. Installation of Building Attachments: Install building attachments at required locations within concrete or on structural steel for proper piping support. Install additional building attachments where support is required for additional concentrated loads, including valves, flanges, guides, strainers, expansion joints, and at changes in direction of piping. Install concrete inserts before concrete is placed. Fasten insert securely to forms. Where concrete with compressive strength less than 2,500 psi is indicated, install reinforcing bars through opening at top of inserts.

C. Proceed with installation of hangers, supports, and anchors only after required building structural work has been completed in areas where the work is to be installed. Correct inadequacies including, but not limited to, proper placement of inserts, anchors, and other building structural attachments.

D. Install hangers, supports, clamps, and attachments to support piping properly from building structure. Arrange for grouping of parallel runs of horizontal piping to be supported together on trapeze type hangers where possible. Where piping of various sizes is to be supported together by trapeze hangers, space hangers for smallest pipe size or install intermediate supports for smaller diameter pipe. Do not use wire or perforated metal to support piping, and do not support piping from other piping.

E. Install hangers within 12 inches of every change in piping direction, end of pipe run or concentrated load, and within 36 inches of every major piece of equipment. Hangers shall be installed on both sides of flexible connections. Where flexible connection connects directly to a piece of equipment only one hanger is required.

F. Install hangers and supports complete with necessary inserts, bolts, rods, nuts, washers, and other accessories. Except as otherwise indicated for exposed continuous pipe runs, install hangers and supports of same type and style as installed for adjacent similar piping.

G. Prevent electrolysis in support of copper tubing by use of hangers and supports which are copper plated, or by other recognized industry methods.

H. Hanger Spacing in accordance with following minimum schedules (other spacings and rod sizes may be used in accordance with the SMACNA Seismic Restraint Manual using a safety factor of five):

1. Steel Pipe (Gas/Air Filled):

Pipe Size	Max. Hanger Spacing	Rod Size
1/2" to 1 1/4"	6 feet	3/8"
1 ½" and larger	10 feet	1/2"

2. Copper Pipe:

Pipe Size	Max. Hanger Spacing	Rod Size
1/2" to 2"	6 feet	3/8"
2 ½" and larger	8 feet	1/2"

3. Caulked Bell and Spigot and Glass Pipe: Provide hanger for each section of pipe, located at shoulder of bell. Where an excessive number of fittings are installed between hangers, provide additional reinforcing.

I. Provisions for Movement:

1. Install hangers and supports to allow controlled movement of piping systems and to permit freedom of movement between pipe anchors, and to facilitate action of expansion joints, expansion loops, expansion bends, and similar units.

2. Load Distribution: Install hangers and supports so that piping live and dead loading and stresses from movement will not be transmitted to connecting equipment.

3. Insulated Piping: Comply with the following installation requirements:
   a. Clamps: Attach clamps, including spacers, (if any), to piping with clamps projecting through insulation.
   b. Shields: Where low compressive strength insulation or vapor barriers are indicated on cold or chilled water piping, install shields or inserts.
   c. Saddles: Where insulation without vapor barrier is indicated install protection saddles.

J. Installation of Anchors:

1. Install anchors at proper locations to prevent excessive stresses and to prevent transfer of loading and stresses to connected equipment.

2. Fabricate and install anchor by welding steel shapes, plates and bars to piping and to structure.

3. Where expansion compensators are indicated, install anchors in accordance with expansion unit manufacturer's written instructions, to limit movement of piping and forces to maximums recommended by manufacturer for each unit.

4. Anchor Spacings: Where not otherwise indicated, install anchors at ends of principal pipe runs, at intermediate points in pipe runs between expansion loops and bends.

K. Equipment Supports:

1. Provide all concrete bases, unless otherwise furnished as work of Division 03. Furnish to Division 03 Contractor scaled layouts of all required bases, with dimensions of bases, and location to column centerlines. Furnish templates, anchor bolts, and accessories necessary for base construction.

2. Provide structural steel stands to support equipment not floor mounted or hung from structure. Construct of structural steel members or steel pipe and fittings. Provide factory-fabricated tank saddles for tanks.

L. Adjusting:

1. Hanger Adjustment: Adjust hangers so as to distribute loads equally on attachments.

2. Support Adjustment: Provide grout under supports so as to bring piping and equipment to proper level and elevations.

3. Clean factory-finished surfaces. Repair any marred or scratched surfaces with manufacturer's touch-up paint.

3.05 ROOF CURBS, EQUIPMENT RAILS, PIPE PORTALS

A. Install per manufacturer's instructions.

B. Coordinate with other trades so units are installed when roofing is being installed.

C. Verify roof insulation thickness and adjust raise of cant to match.

3.06 ELECTRICAL REQUIREMENTS

A. Mechanical Contractor shall coordinate with Division 26 work to provide complete systems as required to operate all mechanical devices installed under this Division of work.

B. Installation of Electrical Connections: Furnish, install, and wire (except as may be otherwise indicated) all heating, ventilating, air conditioning, etc., motors and controls in accordance with the following schedule and in accordance with equipment manufacturer's written instructions and with recognized industry practices, and complying with applicable requirements of UL, NEC, and NECA's "Standard of Installation" to ensure that products fulfill requirements. Carefully coordinate with work performed under the Mechanical Division of these Specifications.

C. Division 23 has responsibilities for electrically powered or controlled mechanical equipment which is specified in Division 23 Specifications or scheduled on Division 23 Drawings. The specific division of responsibilities between Division 23 and 26 for furnishing or wiring this equipment is as follows:

1. Division 23 Mechanical Responsibilities:
   a. MOTORS: Furnish and install all motors necessary for mechanical equipment.
   b. MAGNETIC STARTERS: Furnish all magnetic starters whether manually or automatically controlled which are necessary for mechanical equipment. Furnish these starters with all control relays or transformers necessary to interface with mechanical controls. If the starter is factory installed on a piece of Division 23 equipment, also furnish and install the power wiring between starter and motor.
   c. VARIABLE FREQUENCY DRIVES: Provide all VFD's associated with mechanical equipment. If the drive is installed on a piece of factory assembled equipment the wiring between motor and drive is to be provided as part of the factory equipment.

d. DISCONNECTS: Provide the disconnects which are part of factory wired Division 23 equipment. Factory wiring to include wiring between motor and disconnect or combination starter/disconnect.

e. CONTROLS: Division 23 Contractor (including the temperature controls subcontractor) is responsible for the following equipment in its entirety. This equipment includes but is not limited to the following:

1) Control relays necessary for controlling Division 23 equipment.
2) Control transformers necessary for providing power to controls for Division 23 equipment.
3) Line voltage thermostats.
4) Low or non-load voltage control components.
5) Remote bulb thermostats.
6) Non-life safety related valve or damper actuators.
7) Float switches.
8) Solenoid valves, EP and PE switches.
9) Refrigeration controls. (Division 26 provides power to refrigeration panels.)

f. FIRE AND LIFE SAFETY EQUIPMENT:

1) Fire/Smoke Dampers: Division 23 is responsible for providing and physically installing the damper and for installing any required control interface wiring to Division 23 controls.

a) Where fire/smoke dampers are part of an integrated smoke control system, Division 23 is responsible for providing dampers with necessary end switches for proof of closure. (See Section 233113.)

b) Where these dampers are not part of an integrated area wide smoke detection system, Division 23 is responsible for providing each fire/smoke damper with a dedicated duct detector installed per the requirements of the building code. (See Section 233113). If not integral with the damper assembly, the detector is to be installed by Div. 23 but wired for damper control by Div. 26.

2) Fire Sprinkler System: Division 23 is responsible for providing necessary controls including flow switches and alarm bells.

3) Specialized fire suppression systems: Division 23 is responsible for providing necessary system controls and any required control interface wiring to these controls. Division 26 is responsible for bringing power to point of connection with the system.

D. Division 26 has responsibilities for electrically powered or controlled mechanical equipment, which is specified in Division 23 Specifications or scheduled on Division 23 Drawings. The specific division of responsibilities between Division 23 and 26 for furnishing or wiring this equipment is as follows:

1. Division 26 Electrical Responsibilities:

a. MOTORS: Provide the power wiring for the motors.

b. MAGNETIC STARTERS: Except where magnetic starters are factory installed on Division 23 factory assembled equipment, Division 26 is to install magnetic starters furnished by Division 23 and install the necessary power wiring to the starter and from the starter to the motor. In the case of factory installed starters, Division 26 is to install the necessary power wiring to the starter.

c. VARIABLE FREQUENCY DRIVES: Physically mount all VFD's, which are not specified to be installed on Division 23 factory assembled equipment. Provide the necessary power wiring to the VFD and from the VFD to the motor except in the case of factory installed VFD's where wiring between the motor and VFD is to be by Division 23. Where disconnects are installed between a VFD and a motor provide the interlocking wiring between the disconnect and VFD to insure that the drive is shutdown simultaneously with motor.

d. DISCONNECTS: Provide all disconnects necessary for Division 23 mechanical

equipment which are not provided as part of factory wired Division 23 equipment. Provide power wiring to all disconnects. In addition provide power wiring between motor and disconnect when the disconnect is not factory installed. See also Variable Frequency Drive above for special wiring requirements.

e. CONTROLS: Division 26 Contractor is responsible for providing power to control panels and control circuit outlets.

f. FIRE AND LIFE SAFETY EQUIPMENT:

1) Fire/Smoke Dampers: Division 26 is responsible for power wiring to the damper and as follows:

a) Where these dampers are part of an integrated smoke control system Division 26 is responsible for providing the detectors and for all fire detection system wiring necessary to integrate dampers and related end switches into the system.

b) Where these dampers are not part of an integrated area wide smoke detection system, Division 23 is responsible for providing each fire/smoke damper with a dedicated duct detector installed per the requirements of the building code. (See Section 233113). If not integral with the damper assembly, the detector is to be installed by Div. 23 but wired for damper control by Div. 26.

2) Fire Sprinkler System: Division 26 is responsible for providing power wiring to fire protection controls including flow switches and alarm bells.

3) Specialized fire suppression systems: Division 26 is responsible for providing power wiring to suppression system and its controls.

2. Coordinate with other work, including wires/cables, raceway and equipment installation, as necessary to properly interface installation of electrical connections for equipment with other work.

3. Connect electrical power supply conductors to equipment conductors in accordance with equipment manufacturer's written instructions and wiring diagrams. Mate and match conductors of electrical connections for proper interface between electrical power supplies and installed equipment.

4. Maintain existing electrical service and feeders to occupied areas and operational facilities, unless otherwise indicated, or when authorized otherwise in writing by Owner, or Architect/Engineer. Provide temporary service during interruptions to existing facilities. When necessary, schedule momentary outages for replacing existing wiring systems with new wiring systems. When that "cutting-over" has been successfully accomplished, remove, relocate, or abandon existing wiring as indicated.

5. Cover splices with electrical insulating material equivalent to, or of greater insulation resistivity rating, than electrical insulation rating of those conductors being spliced.

6. Prepare cables and wires, by cutting and stripping covering armor, jacket, and insulation properly to ensure uniform and neat appearance where cables and wires are terminated. Exercise care to avoid cutting through tapes which will remain on conductors. Also avoid "ringing" copper conductors while skinning wire.

E. Motors and Motor Control Equipment: Conform to the standards of the NEMA. Equip motors with magnetic or manual line starters with overload protection. Motor starters and line voltage controls shall be installed under Electrical Section but located and coordinated as required under this Section of the work. Starters shall be combination type with non-fusible disconnect switches. All single phase fractional horsepower motors shall have built-in overload protection.

3.07 PAINTING

A. All painting shall be provided under this Division work, unless otherwise specified under Section 099100: Painting. Painting schemes shall comply with ANSI A13.1. Paint all exposed materials such as piping, ductwork, equipment, insulation, steel, etc. Exposed gas piping inside and outside the building shall be painted with two coats of "Rust-O-Leum" Yellow. The inside surface of visible ductwork above diffusers/grilles shall be painted flat black. Exposed copper indirect waste piping serving food service equipment shall be painted metallic chrome.

B. All exposed work under Division 23 shall receive either a factory finish or a field prime coat finish, except:

1. Exposed copper piping.

2. Aluminum jacketed outdoor insulated piping.

3.08 IDENTIFICATION MARKERS

A. General: Where identification is to be applied to surfaces which require insulation, painting, or other covering or finish, including valve tags in finished mechanical spaces, install identification after completion of covering and painting. Install identification prior to installation of acoustical ceilings and similar removable concealment.

B. Piping System Identification:

1. Install pipe markers on each system indicated to receive identification, and include arrows to show normal direction of flow.

2. Locate pipe markers as follows:
   a. Near each valve and control device.
   b. Near each branch, excluding short take-offs for fixtures and terminal units; mark each pipe at branch, where there could be question of flow pattern.
   c. Near locations where pipes pass through walls or floors/ceilings, or enter non-accessible enclosures.
   d. At access doors, manholes, and similar access points which permit view of concealed piping.
   e. Near major equipment items and other points of origination and termination.
   f. Spaced horizontally at maximum spacing of 20' along each piping run, with minimum of one in each room. Vertically spaced at each story transversed.

C. Underground Piping Identification: During backfilling/topsoiling of each exterior underground piping system, install continuous underground-type plastic line marker, located directly over buried line at 6” to 8” below finished grade. Where multiple small lines are buried in common trench and do not exceed overall width of 16”, install single line marker.

D. Ductwork Identification: A minimum of every 20 feet for all ductwork 12 inch or more in diameter or width.

E. Mechanical Equipment Identification: Locate engraved plastic laminate signs on or near each major item of mechanical equipment and each operational device. Provide signs for the following:

1. Main control and operating valves, including safety devices.

2. Meters, gauges, thermometers, and similar units.

3. Fans, blowers, primary balancing dampers, and mixing boxes.

F. Text of Signs: In addition to name of identified unit, provide lettering to distinguish between multiple units, inform operator of operational requirements, indicate safety and emergency precautions, and warn of hazards and improper operations. Equipment signs shall include an identification of the area or other equipment served by the equipment being labeled.

3.09 VIBRATION AND DYNAMIC BALANCING

A. Vibration tolerances shall be as specified by the "International Research and Development Corporation", Worthington, Ohio, measured by the displacement, peak to peak, as follows:

1. All Fans: Below severity chart labeled "FAIR", maximum velocity of 0.0785 in/sec, peak.

2. Pump and Electric Motors: Below severity chart labeled "SLIGHTLY ROUGH", maximum vibration velocity of 0.157 in/sec, peak.

3. Compressors: Same as pumps.

B. Correction shall be made to all equipment, which exceeds vibration tolerances specified above. Final vibration levels shall be reported as described above.

3.10 TESTING

A. Provide all tests specified hereinafter and as otherwise required. Provide all test equipment, including test pumps, gauges, instruments, and other equipment required. Test all rotational equipment for proper direction of rotation. Upon completion of testing, certify to the Architect, in writing, that the specified tests have been performed and that the installation complies with the specified requirements and provide a report of the test observations signed by qualified inspector.

B. Ductwork: Test all air quantities as specified in Section 230593 - Testing, Adjusting and Balancing. Pressure tests per SMACNA.

C. Registers and Diffusers: Test for proper operation of manually operated control feature. Test all air quantities as specified in Section 230593 – Testing, Adjusting and Balancing.

D. Ductwork Specialties: Test all operable ductwork specialties for proper operation. Check all fire, smoke and fire/smoke dampers to ensure that they are 100% open.

E. Temperature Control: Test all control functions to assure that all systems are controlling as specified or as otherwise necessary and that all controls are adjusted to maintain proper room temperatures. The manufacturer's representative shall perform all tests.

END OF SECTION

SECTION 230593

TESTING, ADJUSTING AND BALANCING

PART 1 - GENERAL

1.1 APPLICABLE REQUIREMENTS

A. All work to be furnished and installed under this section shall comply with all the requirements of General Conditions, Supplemental Conditions, Division 01 - General Requirements, Section 230500 - Basic Materials and Methods, and other Sections in Division 23 specified herein.

1.2 WORK RELATED IN OTHER SECTIONS

A. Section 230500: Basic Materials and Methods

B. Section 233113: Air Distribution

C. Division 26: Electrical.

1.3 SUMMARY

A. Scope: Extent of testing, adjusting and balancing work required by this Section is indicated on the drawings, in schedules, and by the requirements of this Section, and Section 230500 -Basic Mechanical Requirements.

B. Systems: Testing, adjusting and balancing specified in this Section shall include, but not be limited to, the following systems:

1. Air handling systems including supply, return and exhaust.

2. Air distribution ductwork including supply, return and exhaust.

3. Automatic temperature control system.

4. General exhaust systems.

5. Instruction of Owner's personnel for future balancing of systems.

C. Reference Standards

1. ASHRAE-Standard 111--1988 Practices for Measurement, Testing, Adjusting, and Balancing of Building Heating, Ventilation, Air Conditioning, and Refrigeration Systems.

2. ASHRAE —2003 HVAC Applications Handbook: Chapter 37--Testing, Adjusting and Balancing.

3. AABC--National Standards for Total System Balance.

4. NEBB--Procedural Standards for Testing, Balancing and Adjusting of Environmental Systems.

5. SMACNA--HVAC Systems--Testing, Adjusting and Balancing.

6. Sheet Metal Industry--Testing, Adjusting, Balancing Bureau (TABB) Certified Technician Standards, Procedures and Specifications.

7. American National Standards Institute (ANSI): Comply with the following:
   a. S1.4Specification For Sound Level Meters.
   b. S1.11Specification For Octave-Band and Fractional-Octave-Band Analog and Digital Filters.

1.4 QUALITY ASSURANCE

A. Contractors Qualifications: A specialist certified by the National Environmental Balancing Bureau (NEBB) or Associated Air Balance Council (AABC) with at least 5 years of experience in those testing, adjusting and balancing requirements similar to those required for this project, who is not the installer of the system to be tested and is otherwise independent of the project.

B. Acceptable Testing and Balancing Firms

1.
2.
3.
4.

C. Testing, adjusting, and balancing shall be performed by a certified NEBB technician or a certified AABC technician under direct field supervision of a Certified NEBB Supervisor or a Certified AABC Supervisor.

D. Penalty: The Contractor shall submit the name of the organization he proposes to employ for approval within 30 days after contract award. If the Contractor fails to submit the name of an acceptable agency within the specified time, a firm may be selected to accomplish the work, and this selection shall be binding upon the Contractor at no additional cost.

E. Retainages: In addition to any other sums retained or withheld pursuant to the provisions of this Contract, the amount of dollars will be withheld from payments to the contractor until such time as the work has been completed and accepted. In no event will this amount be paid to the Contractor prior to 60 days following acceptance of the project; during such time, the Contractor shall investigate and correct any reported deficiencies unless such deficiencies are a result of unauthorized tampering by building occupants.

F. Calibration of Testing Instruments: All measurement instruments used for testing, adjusting, balancing, and commissioning shall be calibrated. The time between the most recent calibration data and the final test report date shall not be over 6 months

G. Testing and balancing agency, as part of its contract, shall act as authorized inspection agency responsible to Consulting Engineer and Owner, and shall list all items that are installed incorrectly, require correction, or have not been installed in accordance with contract Drawings and Specifications, pertaining to air distribution, cooling and heating systems. The testing and balancing agency is required to provide written reports of all deficiencies and proposed recommendations to the Owner' Representative, Contractor, Architect and Engineer.

H. The testing and balancing agency shall provide with his bid a performance guarantee covering all

phases of the work as herein specified.

I. The General and mechanical contractors shall cooperate with the selected testing and balancing agency in the following manner:

1. Provide sufficient time before final completion dates so that tests and balancing can be accomplished.

2. The various system installers, suppliers and contractors shall provide all required materials, labor and tools to make corrections when required without undue delay. Install balancing dampers as required by testing and balancing agency.

3. The contractor shall put all heating, ventilating and air conditioning systems and equipment into full operation and shall continue the operation of the same during each working day of testing and balancing.

4. Testing and balancing agency shall be kept informed of any major changes made to the system during construction, and shall be provided with a complete set of Record Drawings.

5. The General Contractor shall make space and other facilities available to the testing and balancing agency to enable their work to progress. The General Contractor shall schedule the work of other trades to avoid conflicts with this work.

1.5 SUBMITTALS

A. Conform to the Submittals requirements of Division 01.

B. Forms: The Contractor shall deliver a complete copy of either NEBB or AABC standard forms for testing and balancing work associated with the project. These forms shall serve as specific guidelines for producing final test report. Hybrid or non-standards forms are not acceptable. Data shall include, but not be limited to, a title page with building information, instrument lists, air flows, water flows, temperatures, sound levels, capacities, nameplate data.

C. Test Reports: Provide six (6) certified test reports, signed by the test and balance supervisor who performed the work. The final reports shall include identification and types of instruments used, and their most recent calibration date, and key plans identifying all inlets and outlets. Final test reports shall be typed. Hand written reports are not acceptable.

D. Maintenance Data: Include, in maintenance manuals, copies of certified test reports and identification of instruments.

E. Qualifications: The Contractor shall submit the certified individual qualifications of all persons responsible for supervising and performing the actual work and the name of the certifying engineer. Provide a reference list of five (5) similar size projects with contact person and telephone number.

1.6 AGENDA

A. Agenda: A preliminary report and agenda shall be submitted and approved prior to the start of testing and balancing work.

1. Review plans and specifications prior to installation of any of the affected systems, and submit a report indicating any deficiencies in the systems that would preclude the proper adjusting, balancing, and testing of the systems.

2. The agenda shall include a general description of each air and water system with its associated equipment and operation cycles for heating and cooling.

3. The agenda shall include a list of all air and water flows to be performed at all mechanical equipment.

4. The agenda shall incorporate the proposed selection points for sound measurements, including typical spaces as well as sound sensitive areas such as conference rooms.

5. The agenda shall also include specific test procedures and parameters for determining specified quantities (e.g. flow, drafts, sound levels) from the actual field measurements to establish compliance with contract requirements. Samples of forms showing application of procedures and calculations to typical systems shall be submitted.

6. Specific test procedures for measuring air quantities at terminals shall specify type of instrument to be used, method of instrument application (by sketch) and factors for:
   a. Air terminal configuration.
   b. Flow direction (supply or exhaust).
   c. Velocity corrections.
   d. Effective area applicable to each size and type of air terminal.
   e. Density corrections.

7. The agenda shall include identification and types of measurement instruments to be used, and their most recent calibration date.

1.7 JOB CONDITIONS

A. General: Do not proceed with testing, adjusting and balancing work until the following conditions have been met.

1. Work has been completed and is operable. Ensure that there is no latent residual work yet to be completed on the tested equipment.

2. Work scheduled for testing, adjusting and balancing is clean and free from debris, dirt and discarded building materials.

3. All architectural openings (doors, windows, and other openings) which may affect the operation of the system to be tested, adjusted, and balanced shall be at their normal states.

4. All related mechanical systems which may affect the operation of the system to be tested, adjusted, and balanced shall be at their normal operating conditions.

PART 2 - PRODUCTS

2.1 TEST HOLES

A. Test holes shall be provided in ducts, housings and pipes as necessary for the proper air and water measurements and to balance systems. At each location where ducts or plenums are insulated, test holes shall be provided with an approved extension with plug fitting.

2.2 PATCHING MATERIALS

A. Material: Seal, patch and repair ductwork, piping and equipment drilled or cut for testing purposes.

1. Plastic plugs with retainers may be used to patch drilled holes in ductwork and housings.

2. Piping shall be capped with materials the same as the piping system.

3. Insulation shall be neatly hemmed with metal or plastic edging, leaving test points visible for future testing.

2.3 TEST INSTRUMENTS

A. Standards: Utilize instruments and equipment of type, precision, and capacity as recommended in the NEBB "Procedural Standards for Testing, Adjusting, and Balancing of Environmental Systems" and AABC manual MN-1.

B. Test Instruments: All instruments used for measurements shall be accurate and calibration histories for each instrument shall be available for examination. Each test instrument shall be calibrated by an approved laboratory or by the manufacturer. A representative has the right to request instrument recalibration, or the use of other instruments and test methodology, where accuracy of readings is questionable.

C. Additional Instruments: Permanently installed measuring instruments, such as temperature and pressure gauges, shall be checked against transfer standard instruments. Any instrument which does not meet specification requirement shall be replaced or recalibrated.

D. Cone Instruments: The Contractor shall employ manufactured enclosure type cones, capable of air volume direct readings, for all diffuser/grille/register air flow measurements. The readout meters shall meet calibration requirements.

PART 3 - EXECUTION

3.1 PROCEDURES AND INSTRUMENTS, GENERAL

A. Requirements: All systems and components thereof shall be adjusted to perform as required by drawings and specifications.

B. Test Duration: Operating tests of heating and cooling coils, fans, and other equipment shall be of not less than four hours duration after stabilized operating conditions have been established. Capacities shall be based on temperatures and air and water quantities measured during such tests.

C. Instrumentation: Method of application of instrumentation shall be in accordance with the approved agenda.

1. All instruments shall be applied in accordance with the manufacturer's certified instructions.

2. All labor, instruments, and appliances required shall be furnished by the Contractor. Permanently installed instruments used for the tests (e.g., flow meters and Btu meters) shall not be installed until the entire system has been cleaned and ready for operation.

3.2 AIR SYSTEM PROCEDURES

A. Adjustments: Adjust all air handling systems to provide approximate design air quantity to or through, each component, and to maintain stable and comfortable interior temperatures, free of drafts or stagnant conditions. Adjusting and balancing of all systems shall be conducted during periods of the year approximating maximum seasonal operation.

B. Equalizers: Equalizing devices shall be adjusted to provide uniform velocity across the inlets (duct side for supply) of terminals prior to measuring flow rates.

C. Balance: Flow adjusting (volume control) devices shall be used to balance air quantities (i.e., proportion flow between various terminals comprising system) to the extent that their adjustments do not create objectionable air motion or sound (i.e., in excess of specified limits).

1. Balancing between runs (submains, branch mains, and branches) generally shall be accomplished by flow regulating devices at, or in, the divided-flow fitting.

2. Restriction imposed by flow regulating devices in or at terminals shall be minimal.

3. Final measurements of air quality shall be made after the air terminal has been adjusted to provide the optimum air patterns of diffusion.

D. Fan Adjustment: Total air system quantities, generally, shall be varied by adjustment of fan speeds or axial-flow fan wheel blade pitch. Damper restriction of a system's total flow may be used only for systems with direct-connected fans (without adjustable pitch blades), provided system pressure is less than 1/2-inch W.G. and sound level criteria is met.

E. Air Measurement: Where air quantity measuring devices are specified in other sections such systems shall be used as a cross-check of portable measuring equipment.

1. Except as specifically indicated herein, pitot tube traverses shall be made of each duct to measure air flow therein. Pitot tubes, associated instruments, traverses, and techniques shall conform to the ASHRAE "Handbook Fundamentals Inch Pound Edition."

2. For ducts serving modular office areas with movable partitions, which are subject to change, pitot tube traverses may be omitted provided the duct serves only a single room or space and its design volume is less than 2000 cfm. In lieu of pitot tube traverses, airflow in the duct shall be determined by totaling volume of individual terminals served, measured as described herein.

3. Where duct's design velocity and air quantity are both less than 1000 (fpm/cfm), air quantity may be determined by measurements at terminals served.

F. Test Holes: Test holes shall be in a straight duct, as far as possible downstream from elbows, bends, take-offs, and other turbulence generating devices, to optimize reliability of flow measurements.

G. Air Terminal Balancing: Generally, measurement of flow rates by means of velocity meters applied to individual terminals, with or without cones or other adapters, shall be used only for balancing. Measurement of air quantities at each type of air terminal (inlet and outlet) shall be determined by the method approved for the balancing agenda. Laboratory tests shall be conducted to prove of methodology when so directed. Such tests shall be conducted in conformance with applicable ASHRAE or American Society of Mechanical Engineers (ASME) codes and shall be made at no cost.

H. Air Motion: Air motion and distribution shall be as specified and indicated on drawings. The Contractor at no additional cost shall, in addition to air motion measurements, make smoke tests wherever requested to demonstrate the air distribution from air terminals.

I. Air System Test and Balance Procedure: Perform the following tests, and balance each system in accordance with the following requirements:

1. Test and adjust blower RPM to design requirements.

2. Test and record motor full load amperes.

3. Make pitot tube traverse of main supply ducts and obtain design CFM at fans.

4. Test and record system pressures, suction and discharge.

5. Test and adjust system for design recirculated air, CFM.

6. Test and adjust system for design CFM outside air.

7. Test and record entering air temperatures.

8. Test and record leaving air temperatures.

9. Adjust all supply, return and exhaust air ducts to proper design CFM.

10. Adjust all zones to proper design CFM, supply and return.

11. Test and adjust duct systems and each diffuser, grille, and/or register to within 10% of design requirements.

12. Each grille, diffuser and register shall be identified as to location and area.

13. Size, type and manufacturer of fans, diffusers, grilles, registers and all tested equipment shall be identified and listed. Manufacturer's ratings on all equipment shall be used to make required calculations.

14. Readings and tests of diffusers, grilles and registers shall include required FPM velocity and test resultant velocity, required CFM and test resultant CFM after adjustment.

15. In cooperation with the control manufacturer's representative, setting adjustments of automatically operated dampers to operate as specified, indicated, and/or noted. Testing agency shall check all controls requiring adjustment by control installers. Room thermostats shall be checked for cooling and heating response.

16. All diffusers, grilles and registers shall be adjusted to minimize drafts in all areas.

17. Adjust overall system balances to allow all self-closing exterior doors to close from any open position. Maximum interior air pressure in a 100% outside air intake mode shall not exceed 0.05" static pressure relative to the outside air pressure.

18. As part of the work of this contract, the HVAC contractor shall make any changes in the pulleys, belts and dampers or the addition of dampers required for correct balance as recommended by air balance agency, at no additional cost to Owner.

19. After air balancing is completed and RPM determined, HVAC Contractor shall provide fixed pitch pulleys.

3.3 AIR SYSTEM DATA

A. Report: The certified report shall include for each air handling system the data listed below.

1. Equipment (Fan or Factory Fabricated Station Unit):
   a. Installation data
      1) Manufacturer and model
      2) Size
      3) Arrangement, discharge and class
      4) Motor hp, voltage, phase, cycles, and full load amps
      5) Location and local identification data
   b. Design data
      1) Data listed in schedules on drawings and specifications.
   c. Fan recorded (test) data
      1) cfm
      2) static pressure
      3) rpm
      4) motor operating amps
      5) motor operating bhp

2. Duct Systems:
   a. Duct air quantities (maximum and minimum) - main, submains, branches, outdoor (outside) air, total air, and exhaust:
      1) duct size(s)
      2) number of pitot tube (pressure measurements)
      3) sum of velocity measurements (Note: Do not add pressure measurements)
      4) average velocity
      5) recorded (test) cfm
      6) design cfm
   b. Individual air terminals
      1) terminal identification supply or exhaust, location and number designation
      2) type size, manufacturer and catalog identification applicable factor for application, velocity, area, etc., and designated area
      3) design and recorded velocities - fpm (state "core," "inlet," etc., as applicable)
      4) design and recorded quantities - cfm (deflector vane or diffusion cone settings)

3.4 CERTIFIED REPORTS

A. Submittals: Six (6) copies of the reports described herein, covering air and water system performance, air motion (fpm), and sound pressure levels, shall be submitted prior to final tests and inspection.

B. Instrument Records: Types, serial numbers, and dates of calibration of all instruments shall be included.

C. Reports: Reports shall conspicuously identify items not conforming to contract requirements, or obvious malfunction and design deficiencies.

D. Certification: Certification shall include checking of adherence to agenda, of calculations, of procedures, and evaluation of final summaries.

3.5 FINAL COMMISSIONING TESTS, INSPECTIONS AND ACCEPTANCE

A. Scope: Test shall be made to demonstrate that capacities and performance of air and water systems comply with contract requirements.

1. At the time of final inspection, the Contractor shall recheck, random selection of data (water and air quantities, air motion, and sound levels) recorded in the certified report. In addition, all courtrooms, auditoriums, and conference rooms shall be rechecked.

2. Points and areas for recheck shall be selected by the commissioning team.

3. Measurement and test procedures shall be the same as approved for work forming basis of certified report.

4. Selections for recheck (specific plus random), in general, will not exceed 25 percent of the total number tabulated in the report, except that special air systems may require a complete recheck for safety reasons.

B. Retests: If random tests elicit a measured flow deviation of 10 percent or more from, or a sound level of 2 db or more greater than, that recorded in the certified report listings, as 10 percent or more of the rechecked selections, the report shall be automatically rejected. In the event the report is rejected, all systems shall be readjusted and tested, new data recorded, new certified reports submitted, and new inspection tests made, all at no additional cost. Retainage time shall be based on the date of the final acceptance of the certified report.

C. Marking of Settings: Following final acceptance of certified reports, the settings of all valves, splitters, dampers, and other adjustment devices shall be permanently marked by the Contractor so that adjustment can be restored if disturbed at any time. Devices shall not be marked until after final acceptance.

END OF SECTION

SECTION 230700

HVAC INSULATION

PART 1 - GENERAL

1.01 APPLICABLE REQUIREMENTS

A. All work to be furnished and installed under this section shall comply with all the requirements of General Conditions, Supplemental Conditions, Division 01 - General Requirements, and Section 230500 - Basic Materials and Methods, and other Sections in Division 23 specified herein.

1.02 SCOPE

A. All work to be furnished and installed under this Section shall include, but not necessarily be limited to, providing insulation for the following:

1. Ductwork

   a. All supply air ductwork, unless otherwise shown on drawings.
   b. All return air ductwork, unless otherwise shown on drawings.
   c. Acoustical duct lining, in vertical/horizontal supply and return ducts within twenty feet (20') of air handling equipment and where otherwise shown on drawings.
   d. Outside air ductwork in return plenums, mechanical rooms and in freezing climates
   e. Exhaust air ductwork in cold air plenums.
   f. Vapor/moisture ductwork.

2. Piping:

   a. Valves, strainers and fittings in insulated piping systems.
   b. Refrigerant hot gas and suction piping.

3. Plenums and equipment rooms, as noted.

B. Types of mechanical insulation specified in this Section include the following:

1. Fiberglass pipe insulation.

2. Cellular glass pipe insulation.

3. Calcium silicate pipe insulation.

4. Flexible elastomeric closed cell insulation

5. Fiberglass duct insulation.

6. Polymide Foam Acoustic duct liner.

7. Calcium silicate duct insulation.

8. Insulation jackets.

9. Insulation accessories.

1.03 RELATED WORK SPECIFIED ELSEWHERE

A. Section 220501: Plumbing.

B. Section 230500: Basic Materials and Methods.

C. Section 232113: HVAC Piping, Valves and Specialties.

1.04 DEFINITIONS

A. Ambient: The air temperature to be maintained in a conditioned room. Typically between 70°F and 78°F.

B. Insert: Spacer placed between the pipe support system and the piping to allow for the space required for insulation.

C. Insulation Group (IG): Definition of Insulation Materials and Operating Temperatures.

D. Insulation Shield: Buffer material placed between the pipe support system and the insulation to prevent the insulation material from crushing.

E. Jacket: Protective covering over the pipe insulation; may be factory applied such as “all service jacket” or field applied to provide additional protection; of such materials as canvas, PVC, aluminum or stainless steel.

F. Piping Insulation: Thermal insulation applied to prevent heat transmission to or from a piping system.

G. Vapor Barrier Jacket: Insulation jacket material that impedes the transmission of water vapor.

H. Freezing Climate: Where outdoor design temperature is less than 33° F, as stated in ASHRAE fundamentals under 99% column for winter design conditions.

1.05 QUALITY ASSURANCE

A. Codes and Standards: Provide products conforming to the requirements of the following:

1. American Society for Testing and Materials (ASTM): Manufacture and test insulation in accordance with the ASTM Standards, including:

   a. B209 - Specification for Aluminum and Aluminum-Alloy Sheet and Plat.
   b. C165 - Recommended Practice for Measuring Compressive Properties of Thermal Insulation.
   c. C167 - Test Methods for Thickness and Density of Blanket or Batt Thermal Insulations.
   d. C177 - Test Method for Steady-State Heat Flux Measurements and Thermal Transmission.
   e. Properties by Means of the Guarded-Hot-Plate Apparatus.
   f. C195 - Specification for Mineral Fiber Thermal Insulating Cement.

g. C196 - Specification for Expanded or Exfoliated Vermiculite Thermal Insulating Cement.
h. C302 - Test Method for Density of Preformed Pipe-Covering-Type Thermal Insulation.
i. C303 - Test Method for Density of Preformed Block-Type Thermal Insulation.
j. C305 - Test for Thermal Conductivity of Pipe Insulation.
k. C356 - Test for Linear Shrinkage of Preformed High-Temperature Thermal Insulation.
l. C411 - Test for Hot-Surface Performance of High Temperature Thermal Insulation.
m. C423 – Standard Test Method for Sound Absorption and Sound Absorption Coefficients by the Reverberation Room Method.
n. C449 - Specification of Mineral Fiber Hydraulic-Setting Thermal Insulating and Finishing Cement.
o. C518 - Standard Test Method for Steady-State Thermal Transmission Properties by Means of the Heat Flow Meter Apparatus.
p. C533 - Specification for Calcium Silicate Block and Pipe Thermal Insulation.
q. C534 - Specification for Preformed Flexible Elastomeric Cellular Thermal Insulation in Sheet and Tubular Form.
r. C547 - Specification for Mineral Fiber Preformed Pipe Insulation.
s. C552 - Specification for Cellular Glass Block and Pipe Thermal Insulation.
t. C553 - Specification for Mineral Fiber Blanket-Type Pipe Insulation (Industrial Type).
u. C592 - Mineral Fiber Blanket Insulation and Blanket-Type Pipe Insulation (Metal-Mesh Covered).
v. C612 - Specification for Mineral Fiber Block and Board Thermal Insulation.
w. C916 - Standard Specification for Adhesives for Duct Thermal Insulation.
x. C921 - Practice for Determining Properties of Jacketing Materials for Thermal Insulation.
y. C1104 - Standard Test Method for Determining the Water Vapor Sorption of Unfaced Mineral Fiber Insulation.
z. C1071 - Standard Specification for Thermal and Acoustical Insulation.
aa. C1338 - Standard Test Method for Determining Fungi Resistance of Insulation Materials and Facings..
bb. E84 - Test Method for Surface Burning Characteristics of Building Materials.
cc. E119 - Test for Fire Resistance.
dd. G21 - Standard Practice for Determining Resistance of Synthetic Polymeric Materials to Fungi.
ee. G22 - Standard Practice for Determining Resistance of Synthetic Polymeric Materials to Bacteria.

2. American Society of Heating, Refrigerating, and Air-Conditioning Engineers (ASHRAE): Provide and install pipe and duct insulation in accordance with the following ASHRAE Standard:

   a. 90 Energy Conservation in New Building Design.

3. National Fire Protection Association (NFPA): Manufacture insulation in accordance with the following NFPA standards:

   a. 255 Test Methods, Surface Burning Characteristics of Building Materials.

B. Do not provide materials with flame proofing treatments subject to deterioration due to the effects of moisture or high humidity.

C. Flame/Smoke Rating: Provide composite mechanical insulation (insulation, jackets, coverings, sealers, mastics and adhesives) with flame-spread index of 25 or less, and smoke-developed index of 50 or less, as tested by ASTM E84 (NFPA 255) Method. In addition, the products, when tested, shall not drip flame particles, and flame shall not be progressive. Provide Underwriters Laboratories,

Inc., label or listing; or satisfactory certified test report from an approved testing laboratory to prove the fire hazard ratings for materials proposed for use do not exceed those specified.

D. Corrosiveness: Provide insulation such that when tested in accordance with the following test, the steel plate in contact with the insulation shows no greater corrosion than sterile cotton in contact with a steel plate for comparison.

1. Test Specimen: Two specimens shall be used, each measuring 1" by 4" by approximately ½" thick.

2. Apparatus: Provide a humidity test chamber in which two polished-steel test plates, 1" wide, 4" long and 0.020" thick, shall be placed. Plates shall be clear finish, cold-rolled strip steel, American quality, quarter hard, temper No. 3, weighing 0.85 lb/sq. ft.

3. Procedure: The steel test plates shall be rinsed with cp benzol until their surfaces are free from oil and grease and allowed to dry. One piece of cold-rolled steel shall be placed between the two insulation specimens and secured with tape or twine. The test specimen and uncovered plate shall be suspended vertically in an atmosphere having a relative humidity of 95% (plus or minus 3%), and a temperature of 120°F (plus or minus 3°F), for 96 hours, and then be examined for corrosion.

E. Insulation thickness shall be the greater standard of that specified here or the State energy conservation requirements.

1.06 SUBMITTALS

A. Product Data: Submit manufacturer's technical product data and installation instructions for each type of mechanical insulation. Submit schedule showing manufacturer's product number, K-value, thickness, and furnished accessories for each mechanical system requiring insulation. Also furnish necessary test data certified by an independent testing laboratory. Submit samples.

B. Maintenance Data: Submit maintenance data and replacement material lists for each type of mechanical insulation. Include this data and product in maintenance manual.

1.07 DELIVERY, STORAGE, AND HANDLING

A. Deliver insulation, coverings, cements, adhesives, and coating to the site in containers with manufacturer's stamp or label affixed showing fire hazard indexes of products.

B. Store and protect insulation against dirt, water, chemical, and mechanical damage. Do not install damaged or wet insulation; remove from project site.

PART 2 - PRODUCTS

2.01 MANUFACTURERS

A. Johns Manville, Owens-Corning, Knauf, Armstrong, Pittsburgh-Corning, Certainteed, Halstead, Rubatex, 3M FireMaster, Pabco, Reflectix, or approved equal. Manufacturer and insulation types listed below indicate a minimum acceptable level of quality required for each classification.

2.02 DUCTWORK INSULATIONS

A. Flexible Fiberglass Blanket: Johns Manville Microlite Xc, formaldehyde-free Type 75 Flexible Blanket:

1. Application: Insulation wrap for ductwork, or other HVAC systems.

2. 'K' Value: ASTM C553-92, 0.27 Btu•in./(hr•ft²•ºF) at 75°F installed full thickness.

3. Density: 0.75 lb/cu ft.

4. Vapor Barrier Jacket: FSK (Foil-Scrim-Kraft) aluminum foil faced reinforced with fiberglass yarn and laminated to fire-resistant kraft.

5. Installation: See Part 3 below.

B. Rigid Fiberglass Board: Johns Manville Linacoustic R-300, Type II duct board:

1. Application: Lining insulation for HVAC plenums and ductwork.

2. 'K' Value: ASTM C1071, 0.23 Btu•in./(hr•ft²•ºF) at 75°F.

3. Density: 3.0 lb/cu ft.

4. Vapor Barrier Jacket: FSK (Foil-Scrim-Kraft) aluminum foil faced reinforced with fiberglass yarn and laminated to fire-resistant kraft.

5. Installation: See Part 3 below.

C. Hydrous Calcium Silicate: Schyller Thermo-12/Gold ASTM C533; Rigid Molded Block Insulation; Asbestos-Free Coded Throughout Material Thickness and Maintained Throughout Temperature Range:

1. “K” Value: 0.40 Btu•in./(hr•ft²•ºF) at 300ºF.

2. Maximum Service Temperature: 1,200°F.

3. Compressive Strength (block): Minimum of 200 psi to produce 5% compression at 1½" thickness.

4. Tie Bands: Secure blocks in places with staggered joints using ⅜" or ½" stainless steel bands on 12” centers.

D. Field Applied Jackets (For Exterior Applications):

1. Longitudinal seams shall not be located on top of ducts when exposed to outdoor environment.

2. Stainless Steel Jacket: Type 304 stainless steel, 0.010” minimum (smooth/corrugated) finish.

3. Aluminum Jacket: 0.016” aluminum with factory applied moisture barrier positioned such that the longitudinal overlap provides a watershed.

4. Circumferential joints shall be wide enough to provide weather-proofing jacket.

5. Secure jacket with ⅜" or ½" stainless steel bands on 12” centers.

E. Field Applied Jackets (For Interior Applications):

1. All longitudinal seams shall be located on bottom of ductwork

2. PVC Plastic: Johns Manville Zeston 2000. One piece molded type fitting covers and jacketing material, gloss white. Connect with tacks and pressure sensitive color matching vinyl tape.

2.03 PIPE INSULATIONS

A. Glass Fiber: Molded fibrous glass pipe insulation shall comply with the requirements of ASTM C 547 and meet ASTM C 585 for sizes required in the particular system. For all fluid distribution temperatures below 45°F the system shall be of a wicking type.

1. Non-Wicking:

a. Manufacturers:
1) Johns Manville Micro-Lok Meeting ASTM C547; or Micro-Flex (pipe sizes larger than 18”)
2) Knauf
3) einsulation

b. Applications: Insulation of piping up to 18” in diameter and 3” thick insulation.
c. 'K' Value: 0.23 at 75°F.
d. Maximum Service Temperature: 850°F.
e. Vapor Retarder Jacket: AP-T PLUS white kraft paper reinforced with glass fiber yarn and bonded to aluminum foil, secure with self sealing longitudinal laps and butt strips or AP jacket with outward clinch expanding staples or vapor barrier mastic as needed.

2. Wicking: Owens Corning VaporWick Meeting ASTM C547; Rigid Molded Noncombustible:

a. 'K' Value: 0.23 at 75°F.
b. Maximum Service Temperature: 850°F.
c. Jacket: Polymer facing with factory-applied adhesive closure to provide positive mechanical and vapor sealing of longitudinal seams.

B. Rigid polyisocyanurate foam: HiTHERM HT-300.

1. ‘K’ Value: 0.165 at 75°F (24°C)

2. Maximum Continuous Service Temperature: 300°F.

3. Vapor Retarder Jacket: Saran 540/SSL or Mylar laminate.

C. Hydrous Calcium Silicate: Johns Manville Thermo-12/Gold, ASTM C533; Rigid Molded Pipe:

1. 'K' Value: 0.40 at 300°F.

2. Maximum Service Temperature: 1,200°F.

3. Compressive Strength (block): Minimum of 200 psi to produce 5% compression at 1½" thickness.

4. Tie Wire: 16 gauge stainless steel with twisted ends on maximum 12” centers.

D. Flexible Elastomeric Closed Cell Thermal Insulation: Armacel, Rubatex k-flex ECO, closed-cell, halogen free, elastomeric insulation. Comply with ASTM-C177, ASTM E 84 and UL 181.

1. ‘K’ Value: 0.27 at 75°F.

2. Density: 3.0 to 6.0 lbs./cu.ft.

3. Maximum Service Temperature: 260°F.

4. Seal all seams and joints with contact adhesive.

E. Field Applied Jackets (For Interior Applications):

1. All longitudinal seams shall be located on bottom of pipes.

2. PVC Plastic: Johns Manville Zeston 2000. One piece molded type fitting covers and jacketing material, gloss white. Connect with tacks and pressure sensitive color matching vinyl tape.

3. Canvas Jacket: UL listed fabric, 6 oz/sq. yd. plain weave cotton, treated with dilute fire retardant lagging adhesive.

4. Aluminum Jacket: 0.016” thick sheet, [smooth/embossed] finish, with longitudinal slip joints and 2” laps, die shaped fitting covers with factory attached protective liner.

5. Secure aluminum jackets with 3/8” or ½” stainless steel bands on 12” centers.

F. Field Applied Jackets (For Exterior Applications):

1. All longitudinal seams, on horizontal pipe runs, shall be installed on the bottom of pipes.

2. Aluminum Jacket: 0.016” (minimum) thick sheet, [smooth/embossed] finish, with longitudinal slip joints and 2” laps, die shaped fitting covers with factory attached protective liner.

3. Stainless Steel Jacket: Type 304 stainless steel, 0.010” minimum (smooth/corrugated) finish.

4. Secure stainless steel or aluminum jackets with ⅜” or ½” stainless steel bands on 12” centers.

5. Manufacturers: Pabco, Childers, RPR, or approved equal.

G. Removable Covers:

1. Provide removable covers on pumps, valves, air separators, vents, fittings, flanges, strainers, traps, etc., where periodic maintenance or removal of insulation may is required.

2. Use of premolded fittings with PVC covers is acceptable.

3. Use of lace-on type insulating blankets is acceptable.

PART 3 - EXECUTION

3.01 EXAMINATION AND PREPARATION

A. Verify that piping and ductwork has been tested for leakage in accordance with specifications before applying insulation materials. All piping and ductwork shall be inspected by Owner's Representative prior to installation of insulation. Any insulation applied prior to inspection shall be removed and new insulation applied at no additional cost to Owner. Notify Owner's Representative five (5) working days prior to insulation installation.

B. Verify that all surfaces are clean, dry and free of foreign material.

3.02 INSTALLATION

A. General:

1. Install materials in accordance with manufacturer's recommendations, building codes and industry standards.

2. Remove and replace any insulation that has become wet or damaged during the construction process.

3. Continue insulation and vapor barrier at penetrations and duct supports, except where prohibited by code. Instances where this is required include:

   a. Ductwork support angle or struts. To prevent crushing of low density insulation, provide separator or high density insulation at point of support. Vapor barrier to continue unbroken at point of support.

B. Ductwork – Insulation on the Duct Exterior:

1. Provide insulated ductwork conveying air below ambient temperature (below room temperature) with vapor retardant jacket. Seal all vapor retardant jacket seams and penetrations with UL listed tapes or vapor retardant adhesive.

2. Provide insulated ductwork conveying air above ambient temperature (above room temperature) with or without vapor retardant jacket. Where service access is required, bevel and seal ends of insulation.

3. All exposed exterior metallic ductwork exposed or covered with cladding is to be built with a crown to shed moisture.

4. Continue insulation through walls, sleeves, hangers, and other duct penetrations except where prohibited by code.

5. The insulation shall be firmly wrapped around the ducts with all joints lapped a minimum of 2". The vapor barrier shall be sealed with FSK or metallic pressure sensitive tape. Installed thickness shall not exceed 25% compression. Secure insulation with 16 gage soft annealed black or galvanized wire spaced not more than 12" on centers for straight runs of duct and 6" on centers for elbows and fittings

6. The underside of duct work 24” or greater in width shall be secured with mechanical fasteners and speed clips spaced approximately 18” on center. The protruding ends of the fasteners

shall be cut off flush after the speed clips are installed, and then, when required, sealed with the same tape as specified above.

7. For ductwork exposed in mechanical equipment rooms below 7' or in finished spaces, finish with Johns Manville Zeston 2000 PVC jacket or aluminum or stainless steel jacket.

8. For interior vapor/moisture duct applications, install fiberglass insulation unless specifically indicated otherwise on drawings. Install to meet manufacturer's requirements and as required by local code authorities.

9. For exterior applications, provide insulation with a weather protection jacket.

10. For exterior vapor duct applications, install fiberglass insulation with weatherproof jacket.

C. Piping Insulation:

1. Locate insulation and cover seams in least visible locations unless otherwise specified.

2. Neatly finish insulation at supports, protrusions, and interruptions.

3. Provide insulated dual temperature pipes or cold pipes conveying fluids below ambient temperature with vapor retardant jackets with self sealing laps. Insulate complete system.

4. For insulated pipes conveying fluids above ambient temperature, secure jackets with self sealing lap or outward clinched, expanded staples. Bevel and seal ends of insulation at equipment, flanges, and unions.

5. Provide insert between support shield and piping on piping 1½" diameter or larger. Fabricate of Johns Manville Thermo-12, or other heavy density insulating material suitable for temperature. Insulation inserts shall not be less than the following lengths:

a.	1½" to 2½" pipe size	10" long
b.	3" to 6" pipe size	12" long
c.	8" to 10" pipe size	16" long
d.	12" and over	22" long

6. Use of metal saddles is acceptable as specified in Section 230500. Fill interior voids with segments of insulation matching adjoining pipe insulation.

7. Use of pipe hangers designed as an insulation coupling is acceptable in lieu of saddles and other devices. Klo-Shure coupling or equal.

8. For pipe exposed in mechanical equipment rooms or in finished spaces below 7 feet above finished floor, finish with Johns Manville Zeston 2000 PVC jacket and fitting covers, or aluminum or stainless steel jacket.

9. Where pumps, valves, strainers, etc., with insulation require periodic opening for maintenance, repair, or cleaning, install insulation in such a manner that it can be easily removed and replaced without damage. Use of premolded covers or lace-on type insulation blankets is required.

10. For exterior applications:

a. Provide weather protection jacket. Insulated pipe lengths, pumps, fittings, joints, and valves shall be covered with aluminum jacket or stainless steel jacket. Jacket seams

shall be located on bottom side of horizontal piping. All lateral joints shall be caulked with a minimum 20-year silicone sealant (clear). All longitudinal joints, except those at the bottom of a horizontal pipe run, shall be caulked with a minimum 20-year silicone sealant (clear).

b. Apply weather-resistant protective finish such as WB Armaflex to flexible elastomeric insulation. Insulation seams shall be located on the bottom side of horizontal piping. All lateral and longitudinal joints to be sealed with low V.O.C., UV inhibitive adhesive, such as Armaflex 520 BLV adhesive.

11. For underground installations, install per manufacturer's written instructions and recommendations.

12. When maintenance or service access for equipment will result in foot traffic over floor mounted insulated piping the contractor is to fabricate a permanent removable walkway to prevent damage to the piping and insulation.

3.03 DUCTWORK INSULATION SCHEDULE

A. All insulation thicknesses shall meet or exceed state energy code and mechanical code requirements as noted below. Minimum thermal resistance in range of 4.2 to 4.6 per inch of thickness. Insulation thicknesses are based on fiberglass insulation and may be adjusted for equivalent insulation values for materials with superior “K” factors.

B. All air distribution system ducts and plenums, but not limited to, building cavities, mechanical closets, air handler boxes, and support platforms uses as ducts or plenums, shall be installed, sealed , and insulated to meet the requirements of the code. Portions of supply-air and return-air ducts conveying heated or cooled air located in one or more of the following spaces shall be insulated to a minimum level of R-8.

1. In a space between the roof and an insulated ceiling.

2. In a space directly under a roof with fixed vents or opening to the outside or unconditioned spaces

3. In an unconditioned crawlspace.

4. In other unconditioned spaces.

C. Flexible Fiberglass

	THICKNESS (inches)	FINISH	REMARKS
Supply ducts within building envelope	1-1/2	FSK	
Supply or return duct installed as exposed ductwork in the occupied space.	0		Except where noted on drawings for acoustical reasons
Return ducts within building envelope	1-1/2	FSK	
Exterior/Outside supply and return ductwork sandwiched in double wall sheet metal	2-1/2	FSK	* or a thickness resulting in compressed R value=8
Supply and return ductwork	2		

	THICKNESS (inches)	FINISH	REMARKS
located as described in 3.3.B above.			
Exhaust ducts within 10 ft. of exterior openings	2	FSK	
Exhaust ducts and ventilation equipment casing exposed to outdoor air	2	FSK	

D. Thicknesses in the above table shall have insulation values as follows: 1 1/2 " = R-6, 2" = R-8.0, 3" = R-12. Greater thicknesses are permitted to achieve identical values if space constraints allow.

E. Rigid Fiberglass

	THICKNESS (inches)	FINISH	REMARKS
Outside air intake ducts	1-1/2	FSK	
Interior Plenums	1-1/2	FSK	
Exterior Plenums	2	FSK	
Supply, return and relief ducts in mechanical rooms and parking garages	2	FSK	
Vapor/moisture ducts installed exterior to the building envelope.	1-1/2	FSK	Provide jacketing on exterior ducts
Exterior ductwork sandwiched in double wall sheet metal	2	FSK	

3.04 PIPING INSULATION SCHEDULE

A. All insulation thicknesses shall meet or exceed state energy code requirements as noted below. Increase thickness ½" if exposed to exterior ambient air. Minimum thermal resistance in range of 4.2 to 4.6 per inch of thickness. Insulation thicknesses are based on fiberglass insulation and may be adjusted for equivalent insulation values for materials with superior "K" factors.

B. Fiberglass Insulation

	PIPE SIZE (inches)	THICKNESS (inches)	REMARKS
Piping exposed to freezing	All Sizes	1 ½	
Plumbing vents within 10 feet of the exterior in freezing climates	All Sizes	1	

C. Elastometric Foam (Closed Cell):

	PIPE SIZE (inches)	THICKNESS (inches)	REMARKS
Condensate drain pipes	All Sizes	1/2	
Refrigerant suction and hot-gas piping	All Sizes	3/4	Provide aluminum jacket on exterior insulated piping.
Refrigerant liquid piping	All Sizes	3/4	Provide on all piping concealed in structure and close proximity to likely human contact.

END OF SECTION

SECTION 232300

REFRIGERANT PIPING SYSTEMS

PART 1 - GENERAL

1.01 APPLICABLE REQUIREMENTS

A. All work to be furnished and installed under this section shall comply with all the requirements of General Conditions, Supplemental Conditions, Division 01 - General Requirements, Section 230500 - Basic Materials and Methods, and other Sections in Division 23 specified herein.

1.02 SCOPE

A. Includes, but not limited to:

1. Furnish and install piping and piping specialties for refrigeration systems serving split system air conditioning units.

1.03 RELATED WORK SPECIFIED ELSEWHERE

A. Section 230500: Basic Materials and Methods

B. Section 230700: Mechanical Insulation

C. Section 238125: Mini-Split Air Conditioning Units

D. Division 26: Electrical

1.04 QUALITY ASSURANCE

A. Qualifications: A refrigeration contractor licensed by the State shall install refrigerant piping.

PART 2 - PRODUCTS

2.01 REFRIGERANT PIPING

A. Meet requirements of ASTM B 280-88, "Specification for Seamless Copper Tube for Air Conditioning & Refrigeration Field Service", hard drawn straight lengths.

B. Do not use pre-charged refrigerant lines more than 50 feet in length.

2.02 REFRIGERANT FITTINGS

A. Wrought copper with long radius elbows.

B. Approved Manufacturers:

1. Mueller Streamline

2. Nibco, Inc.

3. Grinnell

4. Elkhart Products Corp.

2.03 SUCTION LINE TRAPS

A. Manufactured standard one-piece traps.

2.04 CONNECTION MATERIAL

A. Brazing Rods:

1. Copper to Copper Connections:
   a. AWS Classification BCuP-4 Copper Phosphorus (6% silver).
   b. AWS Classification BCuP-5 Copper Phosphorus (15% silver).

2. Copper to Brass or Copper to Steel Connections
   a. AWS Classification BAg-5 Silver (45% silver)

3. Do not use rods containing Cadmium.

2.05 FLUX

A. Approved Manufacturers

1. "Stay-Silv white brazing flux" by J.W. Harris Co.

2. High quality silver solder flux by Handy & Harmon.

2.06 EXPANSION VALVES

A. For pressure type distributors, externally equalized with stainless steel diaphragm, and same refrigerant in thermostatic elements as in system.

B. Size valves to provide full rated capacity of cooling coil served. Coordinate selection with evaporator coil and condensing unit.

C. Approved Manufacturers:

1. Alco

2. Henry

3. Mueller

4. Parker

5. Singer

6. Sporlan

2.07 FILTER-DRIER

A. On lines 3/4 inch outside diameter and larger, filter-drier shall be replaceable core type with non-ferrous casing and Schraeder type valve.

B. On lines smaller than 3/4 inch outside diameter, filter-drier shall be sealed type using flared copper fittings.

C. Size shall be full line size.

D. Approved Manufacturers:

1. Alco

2. Mueller

3. Parker

4. Sporlan

5. Virginia

2.08 SIGHT GLASS

A. Combination moisture and liquid indicator with protection cap.

B. Sign glass shall be full line size.

C. Sight glass connections shall be solid copper or brass, no copper-coated steel sight glasses allowed.

D. Approved Manufacturers:

1. Alco

2. Asco

3. Mueller

4. Parker

5. Sporlan

2.09 MANUAL REFRIGERANT SHUT-OFF VALVE

A. Ball valves designed for refrigeration service and full line size.

B. Valve shall have cap seals.

C. Valves with hand wheels are not acceptable.

D. Provide service valve on each liquid and suction line at compressor.

E. If service valves come as integral part of condensing unit, additional service valves shall not be required.

F. Approved Manufacturers:

1. CoBraCo (Apollo)

2. Henry

3. Mueller

4. Superior

5. Virginia

2.10 FLEXIBLE CONNECTORS

A. Provide each liquid line and suction line at both condensing unit and evaporator on systems larger than five tons.

B. Anchor pipe near each flexible connector.

C. Connectors shall be for refrigerant service with bronze seamless corrugated hose and bronze braiding.

D. Approved Manufacturers:

1. Anaconda "Vibration Eliminators" by Anamet

2. Vibration Absorber Model VAF by Packless Industries

3. Vibration Absorbers by Superior Valve Co.

4. Style "BF" Spring-flex refrigerant connectors by Vibration Mountings.

PART 3 - EXECUTION

3.01 INSTALLATION

A. Slope suction lines down toward compressor or one inch/10 feet. Locate traps at vertical rises against flow in suction lines.

B. Refrigeration system connections shall be copper-to-copper, copper-to-brass, or copper-to-steel type properly cleaned and brazed with specified rods. Use flux only where necessary.

1. No soft solder (tin, lead, antimony) connections will be allowed in system.

2. Braze valve, sight glass, and flexible connections.

3. Circulate dry nitrogen through tubes being brazed to eliminate formation of copper oxide during brazing operation.

C. Insulate all suction and hot gas lines. Insulate liquid lines where pipe may be in close contact to humans.

3.02 FIELD QUALITY CONTROL

A. Make evacuation and leak tests in presence of Architect's Engineer after completing refrigeration piping system. Positive pressure test will not suffice for procedure outlined below:

1. Draw vacuum on each entire system with vacuum pump to 200 microns using vacuum gauge calibrated in microns. Do not use cooling compressor to evacuate system nor operate it while system is under high vacuum. Isolate compressor from system piping using shut-off valves prior to pulling vacuum.

2. Break vacuum with refrigerant to be used and re-establish vacuum test. Vacuum shall hold for 24 hours at 200 microns without compressor running.

3. Conduct test at 70°F ambient temperature minimum.

4. Do not use systems until tests have been made and systems started up as specified. Inform Owner's Representative of status of systems at time of final inspection and schedule start-up and testing if prevented by outdoor conditions before this time.

5. After testing, fully charge system with refrigerant and conduct test with Halide Leak Detector.

6. Install valves and specialties in accessible locations. Install refrigeration distributors and suction outlets at same end of coil

END OF SECTION

SECTION 233113

AIR DISTRIBUTION

PART 1 - GENERAL

1.01 APPLICABLE REQUIREMENTS

A. All work to be furnished and installed under this Section shall comply with all the requirements of General Conditions, Supplemental Conditions, Division 01 - General Requirements, Section 230500 - Basic Materials and Methods, and other Sections in Division 23 specified herein.

1.02 SCOPE

A. All work to be furnished and installed under this Section shall comply with all the requirements of Division 01, and shall include, but not necessarily be limited to, the following:

1. Ductwork - Rigid, Flexible and Fabric
2. Ductwork Specialties
3. Flexible Connections
4. Sealants, Adhesives and Tapes
5. Flashings
6. Bird Screens
7. Duct Access Panels and Doors
8. Backdraft Dampers
9. Louvers
10. Diffusers, Grilles, and Registers
11. Fire and Smoke Dampers
12. Elevator Shaft Vents

1.03 RELATED WORK SPECIFIED ELSEWHERE

A. Section 230500: Basic Materials and Methods

B. Section 230593: Testing, Adjusting and Balancing

C. Section 230700: Mechanical Insulation

D. Section 230900: Controls and Instrumentation

E. Division 26: Electrical

1.04 QUALITY ASSURANCE

A. Codes and Standards: Provide products conforming to the requirements of the following:

1. ARI 885-98 “Procedure for Estimating Occupied Space Sound Levels in the Application of Air Terminal and Air Outlets.”

2. AMCA-210 - Laboratory Methods of Testing Fans for Rating Purposes.

3. ANSI S1.23 - Designation of Sound Power Emitted by Machinery and Equipment.

4. ASC-A7001 - Standard for Duct Sealants.

5. ASTM A167 - Standard Specification for Stainless and Heat-Resisting Chromium-Nickel Steel Plate, Sheet, and Strip. Type 304 or 304 stainless steel.

6. ASTM A525 - Standard Specification for General Requirements for Steel Sheet, Zinc-Coated (Galvanized) Hot-Dip Process. G90 zinc-coated.

7. ASTM A527/A527M - Standard Specification for Sheet, Zinc-Coated (Galvanized) by the Hot-Dip Process, Lock-Forming Quality.

8. TIMA AAC-101 - Standard for fiberglass duct liner with erosion proof facing.

9. UL 181 - Factory-Made Air Ducts and Connections, Class 1.

B. Conform to NFPA 90A "Standards for the Installation of Air Conditioning and Ventilating Systems".

C. Provide and construct ductwork systems in conformance with the latest editions of the following documents:

1. SMACNA "HVAC Duct Construction Standards-Metal and Flexible - 2005" (HDCS)

2. ASHRAE – Systems & Equipment Handbook “Duct Construction” Chapter.

3. ASHRAE Fundamentals Handbook "Duct Design" chapter

D. Alternatives: The SMACNA standards and publications referenced in this Section of the specifications establish ductwork construction requirements.

1. Alternatives to these standards and publications may be submitted. Approval will be based on demonstration that such alternatives are equivalent and satisfy the functional requirements described in the referenced standards.

2. Such demonstration shall include evidence that the alternatives proposed were tested in accordance with SMACNA procedures and with test results certified by an independent testing laboratory.

E. All ductwork and equipment shall be seismically supported and braced per the SMACNA “Seismic Restraint Manual: Guidelines for Mechanical Systems”.

F. Flame/Smoke Rating: All materials, including sealants and adhesives, exposed within plenum shall have a flame-spread index of 25 or less, and smoke developed index of 50 or less, as tested by ASTM E84 (NFPA 255) method.

1.05 SUBMITTALS

A. Prior to construction, submit for approval on all materials and equipment:

1. Ductwork - Rigid, Flexible and Fabric

2. Ductwork Specialties

3. Flexible Connections

4. Sealants, Adhesives and Tapes and calculated leakage estimate based on Class 3 (3 cfm/sq.ft). leakage.

5. Flashings

6. Bird Screens

7. Duct Access Panels and Doors

8. Backdraft Dampers

9. Diffusers, Grilles, and Registers

10. Fire and Smoke Dampers

a. Submit a schedule of selected dampers listing the following information for each damper: Location, nominal size, free area velocity, and pressure drop at free area velocity.

11. SMACNA “HVAC Duct Construction Standards - Metal and Flexible"

B. Certifications: Provide a duct schedule, certified by an officer of the sheet metal fabrication subcontractor, that the ductwork conforms to SMACNA standards, and for each sheet metal system furnished on the project include:

1. System name.

2. Duct material.

3. Duct gauge.

4. SMACNA rectangular reinforcement number.

5. SMACNA intermediate reinforcement number.

6. SMACNA transverse reinforcement number.

7. Rod diameter and type.

8. Sealant type.

9. Attachment method.

10. Duct system design pressure.

C. Construction IAQ Management Plan: Collaborate with the general contractor to submit and implement an IAQ Management Plan for the construction process meeting the requirements of the SMACNA IAQ Guidelines. This plan should address the protection of the ventilation system components during construction and cleanup of contaminated components after construction is complete. SMACNA IAQ Guideline recommends control measures in five areas. The IAQ Management Plan should address how compliance has been achieved in these required five areas as follows:

1. HVAC Protection

   a. Shutdown of return side of existing HVAC system in areas effected by heavy construction.
   b. Provision of temporary filters if existing or new systems must remain operational during construction.
   c. Dampering of supply and returns and sealing of openings in areas subject to construction dust.

2. Source Control

   a. How will reduction of contaminants be reduced at the source?
   b. What steps will be taken to employ low emitting products and sealants.
   c. How will air handling equipment be cycled off when not needed.

3. Pathway Interruption

   a. Describe how the construction space will be ventilated as required to dilute contaminants.
   b. Describe how occupied spaces adjacent to construction areas will be kept at positive pressure relative to spaces under construction.

4. Housekeeping: Describe how the following housekeeping objectives will be implemented:

   a. Reduction of dust generated by work will be suppressed.
   b. Maintaining a frequent cleaning frequency for dust and particulates.
   c. Remove spills or excess applications of solvent-containing products as soon as possible.
   d. Remove accumulated water and keep work areas as dry as possible.
   e. Protect insulation materials from exposure to moisture.

5. Scheduling: Describe how overlap of construction activity and ongoing building occupancy activities will be minimized.

D. Field Manual: Submit one copy of the SMACNA "HVAC Duct Construction Standards - Metal and Flexible". Maintain a second copy on the project site.

E. Any ductwork installed without prior approval by the specifier, shall be replaced at the expense of the contractor.

F. The contractor must comply with the enclosed specification in its entirety. If on inspections, the specifier finds changes have been made without prior approval, the contractor will make the applicable changes to comply with this specification, at the contractor's expense.

G. At the discretion of the specifier, sheet metal gauges, and reinforcing may be checked at various times to verify all duct construction is in compliance.

1.06 DELIVERY, STORAGE, AND HANDLING

A. Deliver products to the site in containers with manufacturer's stamp or label affixed.

B. Store and protect products against dirt, water, chemical, and mechanical damage. Do not install damaged components. Remove damaged products from project site.

PART 2 - PRODUCTS

2.01 DUCTWORK

A. Construct all ducts and plenum of gauges, and with joints, bracing, reinforcing, and other construction details in accordance with the latest construction standards previously listed. Metals shall be manufactured by United States Steel, Kaiser, Rolok or equal.

B. Duct dimensions indicated on drawings are net, inside, clear dimensions. For internally lined ducts, add lining thickness to determine metal duct dimensions.

C. Ducts shall be constructed of material gauges and reinforcement per SMACNA pressurization classifications to meet 150% of the pressure requirements for external static pressure scheduled on drawings for the fans serving each system. Where differences exist between SMACNA and the prevailing building code, the gauge or construction method of the submitted ductwork shall be the more stringent of the two standards. See also Part III Execution for matrix of materials and pressure requirements.

2.02 SHEET METAL MATERIALS

A. General Material Requirements: Comply with SMACNA's "HVAC Duct Construction Standards - Metal and Flexible" for acceptable materials, material thicknesses, and duct construction methods unless otherwise indicated. Sheet metal materials shall be free of pitting, seam marks, roller marks, stains, discolorations, and other imperfections.

B. Galvanized Sheet Steel: Comply with ASTM A 653/A 653M.

a Galvanized Coating Designation: [G60 (Z180)] [G90 (Z275)].
b Finishes for Surfaces Exposed to View: Mill phosphatized.

C. PVC-Coated, Galvanized Sheet Steel: Comply with ASTM A 653/A 653M.

1. Galvanized Coating Designation: [G60 (Z180)] [G90 (Z275)].

2. Minimum Thickness for Factory-Applied PVC Coating: 4 mils (0.10 mm) thick[on sheet metal surface of ducts and fittings exposed to corrosive conditions, and minimum 1 mil (0.025 mm) thick on opposite surface].

3. Coating Materials: Acceptable to authorities having jurisdiction for use on ducts listed and labeled by an NRTL for compliance with UL 181, Class 1.

D. Carbon-Steel Sheets: Comply with ASTM A 1008/A 1008M, with oiled, matte finish for exposed ducts.

E. Stainless-Steel Sheets: Comply with ASTM A 480/A 480M, Type 304 or 316, as indicated in the "Duct Schedule" Article; cold rolled, annealed, sheet. Exposed surface finish shall be No. 2B, No. 2D, No. 3, or No. 4 as indicated in the "Duct Schedule" Article.

F. Aluminum Sheets: Comply with ASTM B 209 (ASTM B 209M) Alloy 3003, H14 temper; with mill finish for concealed ducts, and standard, one-side bright finish for duct surfaces exposed to view.

G. Factory- or Shop-Applied Antimicrobial Coating:

1. Apply to the surface of sheet metal that will form the interior surface of the duct. An untreated clear coating shall be applied to the exterior surface.

2. Antimicrobial compound shall be tested for efficacy by an NRTL and registered by the EPA for use in HVAC systems.

3. Coating containing the antimicrobial compound shall have a hardness of 2H, minimum, when tested according to ASTM D 3363.

4. Surface-Burning Characteristics: Maximum flame-spread index of 25 and maximum smoke-developed index of 50 when tested according to UL 723; certified by an NRTL.

5. Shop-Applied Coating Color: [**Black**] [**White**].

6. Antimicrobial coating on sheet metal is not required for duct containing liner treated with antimicrobial coating.

H. Reinforcement Shapes and Plates: ASTM A 36/A 36M, steel plates, shapes, and bars; black and galvanized.

1. Where black- and galvanized-steel shapes and plates are used to reinforce aluminum ducts, isolate the different metals with butyl rubber, neoprene, or EPDM gasket materials.

I. Tie Rods: Galvanized steel, 1/4-inch (6-mm) minimum diameter for lengths 36 inches (900 mm) or less; 3/8-inch (10-mm) minimum diameter for lengths longer than 36 inches (900 mm).

2.03 DUCTWORK FABRICATION

A. Joints – Sealing

1. Duct tape is not allowed. Rolled elastomeric duct sealants are not allowed.

2. Solvent-based and oil-based sealants are not allowed indoors.

3. Seal all transverse joints - this includes mechanical joints similar to Ductmate on all supply, return, exhaust and outside air intake ducts.

4. All sealant systems for outdoor application to be suitable for use in exposure to water. Vulcum 801 and 351.

5. All sealant systems for indoor application to be meet VOC limits as specified in South Coast Air Quality Management District Rule #1168 limiting VOC's to 100 g/l. Sealants by Hardcast, Ductmate, Mon-Eco Industries, United McGill or equal, as recommended for ductwork application.

6. Water-Based Joint and Seam Sealant: Flexible, adhesive sealant, suitable for high velocity and high pressure applications, UL 181B-M listed, UL 723 classified, and complying with NFPA requirements for Class 1 ducts.

   a. Outdoor Application: Not permitted where subject to moisture exposure.
   b. Indoor Application: Hardcast Iron Grip, Ductmate PROseal, Mon-Eco EZ Seal 44-44, or equal.

7. Two-Part Tape Sealing System: Woven-fiber tape impregnated with gypsum mineral compound and modified acrylic/silicone activator to react exothermally with tape to form hard, durable airtight seal. Hardcast Two Part II, McGill Uni-Cast, or equal.

B. Joints - Rectangular Ducts

1. Slip drive joints, standard seams, flanges or welding as required by SMACNA HVAC Duct Construction Standards for system static pressure. Ductmate, MEX Industries, or equal are acceptable joint methods, but must be sealed as described previously. Transverse joints shall be constructed per Figure 1-4 for types T-8 through T-25. T-1 and T-5 slip joints are NOT allowed. Joint T-2, T-3, T-6 and T-7 reinforced slip joints are allowed below 2" static pressures.

C. Joints - Round

1. Exposed Ductwork: Slip drive and sheet metal screws.

2. Concealed Ductwork: Sheet metal screws.

D. Elbows

1. Construct long radius elbows with centerline not less than 1.5 times the duct width. Shorter radius elbows may be used where required to fit in restricted spaces, or as shown. Provide single thickness turning vanes on all short rectangular radius elbows less than 25" wide. Provide double thickness turning vanes for short rectangular radius elbows 25" wide and greater. Number of vanes per SMACNA. Elbows with square throat and radius heel are NOT allowed.

E. Transitions

1. Construct transitions with minimum slope of 1 to 5 ratio and in conformance to SMACNA.

F. Branch Connections

1. Provide 45° entry boots or radius taps for rectangular duct take-offs and conical or bellmouth taps for round duct take-offs. Straight 90° taps are not allowed, except where round take-off

duct size equals round branch duct size. Provide volume dampers at take-offs for balancing if not specifically noted as provided at outlet or inlet. Provide insulation guards at transitions to lined ductwork.

2.04 RECTANGULAR DUCTWORK

A. Construct rectangular ductwork to meet all functional criteria defined in Section VII, of the SMACNA "HVAC Duct Construction Standards Metal and Flexible" 1995 Edition. This shall be subsequently referred to as the SMACNA Manual. All ductwork must comply with all local, code requirements. Ductwork shall be constructed of galvanized steel. Diagonally cross break all panels on ducts 30 inches wide and larger, or bead using automatic bead machine with beads at 12 inches on center or less. All connections shall utilize 45° boot take-offs. Bullhead tees and straight taps are not permitted. All ductwork shall be stainless steel in, and around, magnetically/electrically sensitive rooms.

2.05 ROUND DUCTWORK

A. Round and oval ductwork shall be constructed to SMACNA round ductwork requirements of galvanized sheet steel. Spiral lock seams, only, to 50" diameter. Larger than 50" may be welded longitudinal or spiral lock seam. Lap or snap lock seams are not permitted for round ductwork of any size. Provide beaded sleeve joints or flanges with gasket joints. Elbows shall be 5-gore mitered and welded. All elbows shall be long radius type with centerline radius to duct diameter of 1.5, exceptions will only be allowed at restricted space locations. All connections shall utilize welded conical tees, aluminum conical fitting with damper by Flexmaster #CBD, or 45° boot take-offs by Flexmaster #STOD. Spin-in type or other types of butt tees, bullhead tees or straight taps are not permitted. Flat oval shall be utilized in space-restricted areas. All ductwork shall be aluminum in and around magnetically/electrically sensitive rooms.

2.06 FLEXIBLE DUCTWORK

A. Flexible one-inch thick insulated round ductwork may be utilized where shown on the Drawings and at the last seven (7') feet to each air outlet and inlet, unless shown otherwise on the plans. Maximum of only one 90° bend in any length. No intermediate joints are allowed. Connect each end with stainless steel screw operated drawbands. Support duct to maintain smooth shape without sagging. All connections shall utilize welded conical tees, aluminum conical fitting with damper by Flexmaster #CBD, or 45° boot take-offs by Flexmaster #STOD. Spin-in type or other types of butt tees, bullhead tees or straight taps are not permitted.

B. Flexible ductwork for low pressure systems with positive static pressure at or below 2" w.g. positive pressure shall be a trilaminate of aluminized foil, fiberglass insulation, and aluminized polyester, mechanically locked to galvanized steel helix without adhesives, exterior 1" fiberglass insulation and fire retardant plastic outer jacket. Flexmaster #Type 5B, Thermoflex Model MKE or approved equal.

C. Flexible ductwork for medium and high pressure systems with static pressures above 2" w.g. through 10" w.g. positive pressure shall be a heavy coated fiberglass cloth fabric mechanically locked to galvanized steel helix without adhesives, exterior 1" fiberglass insulation and fire retardant plastic outer jacket. Flexmaster #Type 4B, Thermoflex Model MKC or approved equal.

2.7 PLENUMS AND EQUIPMENT CASINGS

A. Construct casings and plenums in conformance with SMACNA.

B. Minimum Pressure Class: Unless otherwise indicated construct plenums and casings to withstand either a negative or positive static pressure of 4" W.G.

C. Single-Wall: Provide single-wall, casings and plenums where indicated on the drawings.

1. Construct in accordance with SMACNA Standards.

2. Use steel-angle-reinforced standing-seam construction.

3. Locate intermediate bracing angles bolted to the casing 24 inches on centers.

4. Construct for static pressure indicated or for the maximum fan static pressure whichever is less.

5. Bolt to 3" high concrete pads using 1½" x 1½" x ¼" thick galvanized steel structural sections.

D. Double-Wall: Provide where indicated on the drawings, constructed as follows:

1. Provide 4" thick prefabricated double wall insulated metal panel assemblies, with 16MS gauge aluminum or 18 gauge minimum galvanized steel outer sheets.

2. Provide 22 gauge Type 304 stainless steel inner sheets.

3. Casings shall be fully metal enclosed, insulated with 4" thick rigid fiberglass insulation and conforming to NFPA 90A, with maximum flame spread of 25 and maximum smoke developed of 50.

4. Field or factory fabricate to size and configuration indicated on the drawings, using field verified dimensions.

5. Provide coordinated shop drawings.

6. Reinforce spans 10' or greater with structural steel sections to yield maximum deflection ¼" at minus 10" or plus 10" W.G. static pressure.

7. Provide openings and doors, all factory framed, and reinforced with 304 stainless steel structural sections.

8. Construct doors of same material as casings, of sizes and locations indicated on the drawings but not smaller than 18" by 54", and conforming to SMACNA.

9. Provide doors, hinges and hardware factory fabricated and mounted.

10. Door swings shall open against air pressure, with door latches operable from either side.

11. Provide door seals with neoprene gaskets, which have an airtight seal.

12. Provide each door with a 10" by 10" wire reinforced double pane window.

13. Bolt base channel to 3" high concrete pads.

2.8 DUCTWORK SPECIALTIES

A. General: Where specifically called for, materials for use in fabricating ductwork specialties shall be identical to that used to fabricate ductwork. See drawings and Part 3, Execution for schedule.

B. Volume and Splitter Dampers: Galvanized sheet metal blade and frame with Ventfabrics Inc., Ventlok operating hardware. For accessible dampers, provide #641 self -locking dial regulators and #644 self-locking dial regulators for insulated ductwork, #637 square end bearing, and #635 spring end bearing, as applicable. For inaccessible dampers, provide #666 or #677 concealed locking damper regulator with bearings as above. For static pressures above 3" W.G., provide #640 HiVel dial regulator and #609 HiVel end bearing for accessible dampers. Regulators shall extend to and through ceiling with neatly installed hardware at the finished ceiling. For inaccessible dampers requiring adjustment through diffusers use Young Regulator, Bowden cable control system.

C. Multi-louver Volume Dampers: 16 gauge galvanized steel frame. Opposed, 6" wide, 16 gauge galvanized steel blades. Concealed linkage in frame. Ruskin #CD35/OBD or equal.

D. Flexible Connections: Provide flexible connectors at the discharge and inlet of fans, air handlers, rotating mechanical equipment, and where shown on the Drawings for proper vibration isolation. Neoprene impregnated glass cloth with 24 gauge galvanized metal frame. Neoprene-only connectors are <u>not</u> allowed. Minimum dimensions - 3" metal, 3" fabric, 3" metal. Ventfabrics #Ventglas or approved equal by Duro Dyne, Q Industries, consolidated Kinetics, Ductmate Proflex or Elgen.

E. Ducts through roof shall be 16 gauge (or minimum of 2 gauges heavier than attaching ductwork), flashed and counterflashed, and provided with storm collars to secure a watertight construction.

F. Bird Screens: 14 gauge, ½", galvanized wire mesh, set in a galvanized steel frame, screw set.

2.9 DUCT ACCESS PANELS AND DOORS

A. In sheet metal work, hollow core double construction of same or heavier gauge material as duct in which installed. Use no door smaller than 12" by 12" for simple manual access or smaller than 24" by 24" where personnel must pass through infrequently. Use 24" by 60" minimum for filters and more frequent maintenance. Use Ventlok or approved hinges and latches on all doors; 100 Series hinges and latches on low pressure system doors up to 18 " maximum dimension, 200 Series on larger low pressure system doors and 333 Series on high pressure systems. Construct doors up to 18 " maximum dimension with one inch overlap fit and gasket with ¾" by ⅛" sponge rubber, fit larger doors against 1½" by ⅛" flat stock or angle frame and gasket with ¾" by ⅛" sponge rubber or felt. Door swing to be opposite airflow. CESCO, Vent Products, Air Balance, Ductmate Sandwich or equal. Access doors smaller than 12" x 12" can be used for visual inspection of dampers, etc. on small ductwork less than 12" wide but must be of maximum size that will fit on duct with 6" x 6" as minimum size. All access doors smaller than 12" x 12" must be approved by Engineer for the specific application prior to ordering.

2.10 BACKDRAFT DAMPERS

A. Damper Types:

1. Heavy Duty Backdraft Dampers: Provide counterweight type complete with frame, end bearings, counterbalance assembly, blades, and linkage. Pressure drop to be no more than 0.24”w.g. at 1000 fpm. Install at outside air intakes, exhaust outlets, and where shown on

Drawings. Pacific Air Products #PRD-100AL, Ruskin #CBD2, NCA, or equal by Swartout, American Warming or Vent Products.

2. Nonmetallic Backdraft Damper: Provide complete with 16ga frame, neoprene coated fiberglass blades, galvanized expanded metal grill. Ruskin NMS2.

B. Application Requirements:

1. Generator Discharge Damper: Heavy Duty Backdraft Damper. Size at no more than 1000 fpm velocity.

2. Outside Air Intakes except where a control damper is required – Heavy Duty Backdraft Damper.

2.11 LOUVERS

A. Louvers are generally to be provided under Division 10. Where louvers are not covered on architectural plans and specifications, contractor is to provide under the following specification:

1. Louvers to be 6" deep, 35° drainable fixed blade design, constructed of galvanized steel or extruded aluminum, or as specified on the plans.

2. Frames to be constructed of 6" deep channel.

3. Provide with ½" x ½" galvanized mesh birdscreen mounted on backside of louver.

4. Finish/color per architect/engineer's review.

5. Manufacturer: American Warming, Industrial Louver, Vent Products, NCA, Swartout, Ruskin ELF6375DX Louvers & Dampers or equal.

2.12 DIFFUSERS, GRILLES AND REGISTERS

A. All diffusers, grilles, and registers shall be selected to provide proper air distribution for the intended occupant application. All supply air devices shall be selected to provide a maximum air velocity of 50 fpm at three feet above the floor, unless otherwise noted. Manufacturer's representative shall carefully review Architectural and Mechanical drawings and ensure diffuser/grille/register selections will provide proper air distribution at NC 25 or less. Manufacturer at no additional expense to the Owner shall replace diffusers, grilles, and registers not providing proper distribution or excessive noise at scheduled airflow.

B. All frames shall be selected to fit the ceiling type. Verify with Architectural Drawing. Each diffuser, grille and register shall be individually capable of balancing via duct mounted balancing dampers or attached opposed blade dampers. Provide unit opposed blade damper where individual duct mounted balancing dampers are not provided.

C. Sizes, capacities and patterns shall be as shown on the Drawings. Manufacturer: Metal Aire, Titus, Krueger, Anemostat, Carnes, Price or Tuttle&Bailey.

2.13 DUCT SMOKE DETECTORS (DSD)

A. Duct mounted photoelectric smoke detector. One required for each heating or cooling system supplying air in excess of 2,000 cfm, for systems serving more than one occupancy type, and for control of each combination fire/smoke damper when not controlled by Div. 26 area wide detection system. Coordinate with Div 16. work and electrical installer for power to smoke detector. Detector shall be mounted in the supply air ductwork downstream of the air handler and filters, or upstream of combination dampers. Coordinate with control installer to assure that detector shall shut down the air-moving equipment when smoke is detected and close associated damper actuator(s). Sensor shall be selected to operate with air velocity rating from 100 to 4000 fpm. Provide with metal sampling tube. Provide remote test and reset station at ceiling or as otherwise indicated. Duct smoke detector shall be installed in compliance with the applicable mechanical or building code. Coordinate with Section 230900 and 230593 work. System Sensor #D2 series or approved equal.

B. Additional requirements for duct smoke detectors include requirements per Section 6.4 of NFPA-90A. Provide one duct smoke detector at each story to the connection to a common return and prior to any recirculation or fresh air inlet connection in air return systems having a capacity greater than 15,000 cfm and serving more than one story.

2.14 FIRE DAMPERS

A. General:

1. Provide UL labeled 3 hour rated fire dampers at 3-hour and greater penetrations.

2. Provide UL labeled 1½ hour rated fire dampers at less than 3-hour penetrations.

3. All dampers to be certified under the latest UL Standard. Certification based on former non-current standards is unacceptable.

4. All damper installations to conform with NFPA 90A and manufacturer's installation instructions. Details on plans are shown for reference only.

5. Install in ducts passing through floors, walls, and ceilings as required by code. Refer to Architectural and Mechanical plans for damper locations.

6. Provide fire and fire/smoke dampers in locations as required by chapter 7 of the IBC.

7. Provide sleeves, slip joints, retaining angles, duct access doors, ceiling access panels, etc., as required to check and service the fire dampers. Slip or break away joints are not allowed to be taped or sealed. Access doors shall be tight fitting hinged or sliding and shall have 1" high label reading "FIRE DAMPER” or “FIRE/SMOKE DAMPER”.

8. All dampers to be designed for use in dynamic systems.

9. Dampers shall be rated for Leakage Class I. Leakage Class II may be used if damper size is smaller than available Leakage Class I dampers.

10. Dampers shall have an installed pressure drop of no more than 0.10”w.g. at the free area velocity. See submittal requirements above.

11. Dampers shall be installed straight and true, level in all planes, and square in all dimensions. Dampers shall move freely without undue stress doe to twisting, racking, bowing, or other

installation error. Do not install actuators in area where moisture can penetrate actuator or where temperature exceeds 120°F.

12. Sizing: All fire dampers shall be sized to provide equivalent free area through the damper equal to the connecting ductwork. In no case are dampers' pressure drops to exceed those stated below. See also submittal requirements in Part One of this section.

B. Radiation Ceiling Fire Dampers: Bladed ceiling fire damper constructed and tested in conformance with UL-555 (dynamic rating). Fire damper shall have a 165°F fusible link. Installation shall be in accordance with damper manufacturer's instructions. Provide fire blanket where required to obtain listed fire rating. Ruskin #CFD Series, Pottorff #CFD-15 Series or approved equal by CESCO, Air Balance, or Greenheck.

C. Combination Fire/Smoke Dampers:

1. General Requirements:

a. Install at rated corridor wall or ceiling penetrations, occupancy separation walls, area separation walls and where shown on plans. Low leakage fire/smoke damper (Leakage Class 1 unless otherwise stated below) with electric actuator. Fire damper shall be equipped for vertical wall penetrations with manufacturer supplied sleeve and fail closed on loss of power. Each damper shall be equipped with a controlled 15 second electric heat-actuated release device. This device is to be equipped with a push-button reset. No manual fusible links are permitted. Manufacturer shall provide factory assembled sleeve of 16" minimum length. Installation shall be in accordance with damper manufacturer's instructions. Coordinate power and smoke detector connections with electrical installer. Integral smoke detection and actuating devices may be used if listed and approved for such service. Comply with IBC. All combination smoke and fire dampers shall automatically reset from closed to open position upon the reapplication of power to actuators.

b. Actuators: All gear and housing shall be steel. The actuator shall be direct coupled and employ a steel toothed cold-weld clamp for connecting to damper shafts. Aluminum clamps or set-screw attachments are not acceptable. Actuator shall be UL listed and manufactured under ISO 9001 quality control.

1) Actuator shall carry a manufacturer's 5-year warranty.
2) Actuator shall have microprocessor based motor controller providing electronic cut off at full open so that no noise can be generated while holding open. Holding noise level shall be inaudible. Actuator shall be incapable of burning out if stalled before full rotation is reached.
3) Dampers shall be installed straight and true, level in all planes, and square in all dimensions. Dampers shall move freely without undue stress due to twisting, racking, bowing, or other installation error.
4) Actuator shall have UL555S Listing by the damper manufacturer for 350°F and be rated for 20,000 cycles minimum. Actuator shall draw no more than 0.23A at 120V running, or 0.1A holding at 120V (27 VA and 10 VA respectively for 24V power) for 70 in-lb torque.
5) Stall and instantaneous type actuators are not acceptable.
6) Do not install in area where moisture can penetrate damper or actuator nor where actuator temperature exceeds 120°F.
7) All smoke and combination fire and smoke dampers shall be provided with Belimo Aircontrols FSNF120 (-S), FSNF24 (-S) actuators, or approved equal.
8) If a Honeywell ML-4115 actuator is submitted as an alternate, it must be provided with a time delay relay to cause the actuator to reset to drive open mode on momentary loss of power for less than 3 seconds.

2. Dampers for Low Velocity Applications (2000 fpm or below):

   a. Fire damper shall have 6" wide galvanized steel blades with silicone rubber edge seals.
   b. Pressure drop of a typical 24” x 24” size damper shall be no more than 0.05” w.g. at 1000 fpm velocity.
   c. Basis of Selection: Ruskin #FSD-37, Ruskin #FSD-60, Ruskin #FSD60FA, Pottorff #FSD-140 Series, Pottorff #FSD-150 Series, or approved equal by Greenheck, CESCO or Air Balance.

3. Dampers for High Velocity Applications (2001 fpm or above):

   a. Identical to above except, fire damper shall have 6" wide galvanized steel airfoil blades with silicone rubber edge seals.
   b. Pressure drop at 2000 fpm velocity to be no more than 0.08”w.g. for a 24” x 24”size.
   c. Basis of selection to be Ruskin FSD 60 with airfoil blade, Pottorff FSD-151, or approved equal air foil damper by Greenheck, CESCO or Air Balance.

4. Dampers for Ceiling Application:

   a. Where indicated on plans install at rated corridor ceiling penetrations.
   b. Integral smoke detection and actuating devices may be used if listed and approved for such service.
   c. Basis of Selection: Ruskin #FSD36-C, Pottorff #FSD-172, CESCO CFSD-21, Greenheck CFSD, or approved equal by Air Balance.

5. Required Options:
   a. Provide open or closed indicator option assembly consisting of a single pole and a double throw switch used to indicate damper blade position. Output from switch to position indicator light (LED, provided by Division 26) is by automatic temperature control contractor. Include switch mounting bracket, crank arm, blade bracket and linkage from blade to the switch.
   b. Provide a test module to permit test cycling of the damper/actuator in the field
   c. Provide integral smoke detector OR
   d. Provide and field install smoke detector. Electrical installer shall wire.
   e. For exposed wall applications provide matching wall grille to maintain appearance and fire rating.
   f. Temperature limited override: Provide a two temperature electronic high temperature limit. A primary sensor at 165°F can be bypassed by an external electrical signal allowing the damper to reopen and remain open until the temperature reaches the setting of the secondary sensor at 350°F at which point the damper is closed and remains closed. Both sensors are to be equipped with manual resets.

2.15 ELEVATOR SHAFT VENTS

A. Furnish and install elevator shaft vents at top of each elevator shaft over 25’ high as required by code. (IBC).

B. Vents to be sized with throat area equal to 3.5% of elevator shaft hoist way area with minimum size of 3 sq. ft.

C. Vents to be Greenheck model “GRS” with bird screen and prefab curb or Loren Cook Company or the equivalent. Minimum size to meet 3 square feet requirement is size GRS-24 (3.24SF Throat will handle 92SF shaft). Upsize as required.

D. Locate to miss beams and coordinate size and location of roof opening with structural.

PART 3 - EXECUTION

3.01 DUCTWORK MATERIAL APPLICATION SCHEDULE

A. Fabricate ducts with galvanized sheet steel except as otherwise indicated and as follows:

1. Underground Ducts:

   a. For ductwork 24” diameter or smaller: Concrete-encased: [galvanized sheet steel] [PVC-coated, galvanized sheet steel with thicker coating on duct exterior] [stainless steel].
   b. Fiberglass reinforced plastic (FRP)

2. Non-toxic and non-hazardous wet vapor exhaust, such as dishwasher, sterilizer cart wash, and shower exhaust systems:

   a. Material: Type 316L stainless steel, minimum 24 gage spiral or sheet metal ductwork. Type 316 stainless steel fittings.
   b. Joints: welded, or swaged lap-joint with silicon caulk and stainless steel sheet metal screws.
   c. All accessories shall be stainless steel including dampers, damper hardware and turning vanes.

3. Type II Kitchen hoods and dishwasher exhaust hoods or connections: 20 gauge stainless steel ductwork with longitudinal seam at top of horizontal runs and all joints sealed watertight. Slope duct back to point of air inlet. Ductwork may be constructed of aluminum and of other gauges with pre-approval, and as allowed by SMACNA guidelines and local jurisdiction.

4. Humidifier ductwork: Ductwork for humidifiers shall be constructed of 20 gauge stainless steel ductwork with longitudinal seam at top of horizontal runs and all joints sealed watertight. Duct length shall be as required by humidifier manufacturer, or as shown on drawings whichever is greater, to allow for full absorption of water vapor. This portion of duct shall include an integral drain pan and drain line connection.

5. Shower Rooms: Ductwork serving shower rooms or other wet areas shall be constructed similar to ductwork serving dishwashers as noted above or may be fabricated of aluminum ductwork. Where shower room exhaust ducts connect to a general exhaust riser, the non-ferrous ductwork with sealed joints need only extend to point of connection to the general exhaust riser.

6. Environmental exhaust ductwork serving domestic clothes dryers shall be constructed of metal and shall have smooth interior surface. Provide backdraft damper at discharge to atmosphere.

7. Kitchen Grease Exhaust Ductwork:

   a. Grease exhaust ducts for Type I hoods shall be constructed of 16 gauge steel or 0.044" stainless steel with liquid tight welded or brazed joints in accordance with the mechanical code. Provide bolted access doors at each elbow and at the base of each riser sized to allow proper cleaning. Use long or short radius elbows. Do not use turning vanes or square elbows. All joints in vertical riser to be water tight to prevent

leakage of condensation. Ducts exposed to outside atmosphere to be protected against corrosion as required by code. Ducts to be galvanized, painted with non-corrosive paint or insulated.

b. As an alternate method to enclosing the duct in a rated shaft enclosure - furnish and install on the exhaust duct, a 2 hour fire rated board or blanket wrap. See Section 15080 Insulation for specification.

8. All duct system appurtenances are to be the same material as ductwork including volume dampers and access panels.

3.02 DUCTWORK AND SPECIALTIES INSTALLATION

A. Ductwork is generally diagrammatically indicated and shall be generally installed as indicated. Do not scale Drawings for exact location of ducts. Install ducts to best suit field conditions and cooperate with other trades. Do not penetrate Structural members without consent of Architect or Structural Engineer. Check with Structural drawings prior to locating any penetrations. Duct sizes are indicated as net inside dimensions on the Drawings. The indicated dimensions shall be altered at the job site for the purpose of avoiding interferences and clearance difficulties to other dimensions producing the same air handling characteristics, provided such altered dimensions are approved by the Architect. Ducts shall be constructed in accordance with the latest edition of codes and standards identified in Part 1 and as shown on the Drawings.

1. Clean and pretreat surfaces before application of sealant. Conform to the manufacturer's cleaning procedures. Install sealants in conformance with manufacturer's instructions.

2. Vertical ducts or horizontal ductwork penetrating fire rated ceilings, roofs, walls and floors shall be fire separated with UL listed and labeled fire dampers. Provide additional fire dampers indicated on the Drawings and as otherwise required by the IBC and building inspector. Provide approved firestopping between damper frames and firewalls. Install fire dampers in accordance with NFPA Standards, requirements of the State Fire Marshal, and applicable codes. Ensure that fire dampers are installed in the open position.

3. Provide 16 gauge metal sleeve with 1" clearance and pack space around ducts through walls tight with fiberglass, and seal with Schuller Duxseal or approved 3M fire proof caulking, as required. For exposed ducts through walls, provide flat, sheet metal escutcheon to conceal fiberglass and wall opening.

4. Grilles, Registers and Diffusers: Install flush, squared, tightly sealed, and entirely covering sheet metal ductwork and gaskets. Thread sheet metal mounting screws tightly into sheet metal. All frames shall be selected to fit the ceiling type. Verify with Architectural Drawing. Each diffuser, grille and register shall be individually capable of balancing via duct mounted balancing dampers or attached opposed blade dampers. Provide unit opposed blade damper only where individual duct mounted balancing dampers are specifically noted as not provided. Duct connections shall fit securely to necks or collars behind face area. Provide all necessary transition pieces and duct collars to make connections from ductwork to neck sizes. Where ducts connect directly to necks or collars provide a minimum straight duct section of two times the duct diameter to the last elbow. Where minimum straight duct sections are not physically possible provide sheet metal plenum sized for approximately 500 fpm air velocity with duct tapped directly to side of plenum. Where building walls, floors and ceilings form portions of duct or plenum, provide gasketed angles or channels at junction points, securely bolted and sealed to building structure.

5. Install turning vanes in all mitered elbows in all ducts, so that tips are parallel with the sides of the ducts. Vanes shall be single thickness type. Tips of acoustical turning vanes on outside radius shall be flush with acoustical lining.

6. Provide flexible connections to completely isolate fans from direct contact with all sheet metal work.

7. Provide access panels or doors, as required, for access to valves, controllers, fire dampers and humidifier dispersion tubes. Access doors required in Product Conveying Vapor/Moisture Ductwork (see applicable paragraph above) shall not be installed in the bottom of the duct or in a manner to allow leaks.

8. Volume Dampers: Provide manual volume dampers in all low pressure supply, return and exhaust branch ductwork to grilles, diffusers, inlet and outlet openings to facilitate balancing of systems. These are to be provided as part of contract whether shown on plans or not. Where ceilings are not accessible, provide access door or remote damper operator.

9. Splitters and splitter dampers shall not be installed in medium or low pressure supply ductwork to VAV systems.

B. Hangers and Supports: Securely fasten all ductwork to the building construction by means of hangers, supports, guides, anchors, and sway braces to maintain duct alignment, to prevent sagging, and to prevent noise and excessive strain on ductwork due to movement under operating conditions.

1. Maximum spacing between hangers shall not exceed eight (8) feet.

2. Adequately mount and anchor all material and equipment as required. Include lateral bracing as required to prevent horizontal, seismic movement. Refer to IBC and architectural Drawings for seismic requirements.

3. Do not support ductwork from fans or any other pieces of equipment.

4. Powder driver fasteners shall not be used to support rectangular ducts of 40" maximum dimension. Powder driven fasteners shall not be allowed in existing facilities where electronic equipment is located.

5. Support round duct, 30" and larger, with two hangers at each support point.

6. Hangers and supports shall conform to SMACNA section "Hangers and Supports". Nail inserts, hangers and supports to formwork before slabs are poured. Cut off or remove nails, strap-ends and other projections, flush with concrete after forms are removed.

7. Support vertical ducts, passing through floors with two continuous angles screwed to the duct and bearing to the floor and conforming to SMACNA section "Riser Support-From Floor". Blocking or shimming ducts will not be permitted.

C. Other:

1. Fans: Align fans, motors, and drives. Install fans to render bearings accessible for lubrication without dismantling fans or ducts. Provide extended bearing oilers as required. Mount all fans on vibration isolators as specified.

2. Insulation: Properly and neatly apply insulation on all material and equipment and apparatus, as specified, including all fittings. Apply insulation over clean, dry surfaces, with adjoining

sections firmly butted together and canvas smoothly pasted over. When vapor barriers are specified, install continuous overall external surfaces of the entire system.

3. Duct Sizing: Where duct sizes are not specifically shown on the plans or must be modified due to physical limitations, supply ducts may be sized at a maximum velocity of 1,500 fpm or 0.08" sp friction per 100 feet, whichever provides the larger duct, and return/exhaust/intake ducts may be sized at a maximum velocity of 1,000 fpm or 0.06" sp friction per 100 feet, whichever provides the larger duct.

4. Humidifiers: Humidifier installation shall be approved by manufacturer and coordinated with all other systems. Condensate piping shall include p-traps as recommended by the humidifier manufacturer. Insulate exposed piping as required by the code
5. Access Floor Diffusers: The mounting ring for floor mounted diffusers are to be affixed to the floor tiles using a clamp insert or other method approved for use with the floor diffuser.

3.03 CONSTRUCTION AND SEALING CRITERIA

A. 233113 – Unless called out otherwise on drawings the pressure classification of ductwork shall be as follows:

Duct system:	**Location**	**Working pressure**	**Build to SMACNA pressure class**	**Build to SMACNA seal class:**
Outdoor air intake	From ambient intake to AHU	-1” wc	-2” wc	B
Med press Supply Air	From AHU to air terminal units	+6” wc	+10” wc	A
Med press Supply Air	From AHU to air terminal units	+4” wc	+6” wc	A
Med press Supply Air	From AHU to air terminal units	+2” wc	+3” wc	B
Low press Supply Air	Downstream of air terminal units to grilles, registers or diffusers.	low pressure	+1” wc	B
Low press Supply Air	From AHU to grilles, registers or diffusers.	low pressure	+1” wc	B
Med. Press Return air	From air terminal units to AHU	-3” wc	-4” wc	A
Med. Press Return air	From air terminal units to AHU	-2” wc	-3” wc	B
Med. Press Return air	From air terminal units to AHU	-1” wc	-2” wc	B
Low press Return air	From return grilles to AHU	Low pressure	-1” wc	B
Transfer air	From grille to grille, or acoustic boots or “z” bends	Low pressure	+0.5” wc	C
Relief air	From AHU to discharge at ambient	+1” wc	+2” wc	B
General exhaust	From grille to exhaust fan	-1” wc	-2” wc	B
General exhaust	From exhaust fan to discharge at ambient	+1” wc	+2” wc	B
Washroom exhaust	From grille to exhaust fan	-1” wc	-2” wc	B

Duct system:	Location	Working pressure	Build to SMACNA pressure class	Build to SMACNA seal class:
Washroom exhaust	From exhaust fan to discharge at ambient	+1" wc	+2" wc	B
Gravity type boiler vent	From boiler connection to ambient discharge	Low pressure	+1"	Seal per boiler vent mfg. installation recommendations

B. 233113 – The default leakage classification of ductwork is as follows:

Duct working press. class:	Low pressure - +/- 0.5"wc	+/-1" – +/-3"	+/-4" – +/-10" wc
SMACNA Seal Class	C	B	A
Sealing Applicable	Transverse joints only	Transverse and longitudinal Joints	Joints, seams, and all wall penetrations
Rectangular sheet metal SMACNA Leakage Class	24	12	6
Round sheet metal SMACNA Leakage Class	12	6	3

3.04 MANDATORY CALIFORNIA DUCTWORK TESTING

A. All duct systems shall be sealed to a leakage rate not to exceed 6% of the fan flow if the duct systems are:

1. Connected to a constant volume, single zone system, air conditioners, heat pumps or furnaces, and
2. Serve less than 5,000 square feet of floor area, and
3. Have more than 25% duct surface area located in one or more of the following places:

   a. Outdoors, or
   b. In a space directly under a floor where the U-factor of the roof is greater than the U-factor of the ceiling, or
   c. In a space directly under a roof with fixed vents or openings to the outside or unconditioned spaces, or
   d. In an unconditioned crawlspace, or
   e. In other unconditioned spaces.

4. The leakage rate shall be confirmed through field verification and diagnostic testing in accordance with procedures set forth in the Nonresidential ACM Manual.

3.05 COMBINATION FIRE, SMOKE DAMPER INSTALLATION

A. Install per manufacturer's and UL installation requirements.

B. Interlock operation of all fire smoke dampers to close dampers when the fans associated with the dampers are shut down. This also includes dampers in transfer ducts associated with system fans.

3.06 SEISMIC REQUIREMENTS

A. See Section 230548 for specific requirements.

B. All HVAC equipment and machinery shall be anchored to withstand forces generated by earthquake motions. As a minimum, equipment and equipment frames shall be designed to withstand a force of 100% of the weight of the equipment and frame acting at its center of gravity. Anchorage of the equipment and/or frame to the structure shall be for a force of four times gravity also acting at the center of gravity.

C. The seismic calculations shall be the responsibility of contractor.

3.07 EQUIPMENT

A. Install equipment as shown on plans and in accordance with manufacturer's installation recommendations.

3.8 SUPPLY DIFFUSER AND REGISTER LOCATIONS

A. Coordinate location of supply outlets with ceiling mounted smoke detectors. Locate outlets or outlet distribution so as to prevent airflow from inhibiting the operation of smoke detectors. Locate ceiling outlets a minimum of 3'-0" from smoke detectors.

3.9 PAINTING

A. Where the interior surfaces of ductwork are visible through the blades of supply outlets, return inlets, and exhaust inlets - paint the interior visible surfaces with one coat of flat black paint.

3.10 FIELD QUALITY CONTROL

A. Do not insulate or conceal ductwork before inspection by Owner's Representative, Architect or Engineer. If ductwork is insulated and concealed prior this inspection the Contractor shall remove insulation and ceiling to permit inspection at no additional cost to the Owner. The Contractor shall replace the insulation and ceiling after final inspection at no additional cost to the Owner.

B. Ductwork Deflection Criteria:

1. Maximum inward and/or outward deflection at sheetmetal panels shall be ¾" under maximum static pressure operating conditions. Additional intermediate stiffening angles shall be installed where deflections exceed ¾".

2. Maximum inward and/or outward deflection at sheetmetal elbows and joints shall be ¼" under maximum static pressure operating conditions. Additional stiffening angles shall be installed where deflections exceed ¼".

C. Acceptance of duct systems shall be contingent upon conformance with the requirements specified in Section 230593 "Testing, Adjusting and Balancing".

3.11 ADJUSTING AND CLEANING

A. Clean the inside of plenums, casings, enclosures, fans, and accessible ductwork before starting fans. Blowout coils and condensate piping with compressed air. Install a clean set of filters in each system prior to testing and balancing. Proceed with testing and balancing. All dampers shall be locked in place.

END OF SECTION

SECTION 233413

FANS AND VENTS

PART 1 - GENERAL

1.01 APPLICABLE REQUIREMENTS

A. All work to be furnished and installed under this section shall comply with all the requirements of General Conditions, Supplemental Conditions, Division 01 - General Requirements, Section 230500 - Basic Materials and Methods, and other Sections in Division 23 specified herein.

1.02 SCOPE

A. All work to be furnished and installed under this Section shall comply with all the requirements of Division 1, and shall include, but not necessarily be limited to, the following:

1. Small Cabinet Fans (Ceiling Mounted and Inline)

2. Gravity roof vents

1.03 RELATED WORK SPECIFIED ELSEWHERE

A. Section 230500: Basic Materials and Methods

B. Section 230593: Testing, Adjusting and Balancing

C. Section 230700: Mechanical Insulation

D. Section 233113: Air Distribution

E. Division 26: Electrical

1.04 QUALITY ASSURANCE

A. Manufacturer's Qualifications: Provide air handling units that are the standard product of an equipment manufacturer regularly engaged in the production of such units who issues complete catalog information on such products. Units shall not be fabricated by the Contractor.

B. Certifications: Provide certified ratings of units based on tests performed in accordance with ARI 430, "Central-Station Air Handling Units."

C. Codes and Standards: Provide air handling units conforming to the requirements of the latest addition of the following:

1. Air Movement and Control Association (AMCA):

a. 99 standards Handbook

b. 210 Laboratory Methods of Testing Fans for Rating [Unit shall bear AMCA Certified Rating Seal]
c. 300 Reverberant Room Method for Sound Testing of Fans [Unit shall bear AMCA Certified Rating Seal]
d. 301 Methods for Calculating Fan Sound Ratings from Laboratory Test Data
e. 500 Test Method for Louvers, Dampers, and Shutters

2. American National Standards Institute (ANSI):

a. 9 Load Ratings and Fatigue Life for Ball Bearings
b. 11 Load Ratings and Fatigue Life for Roller Bearings
c. 900 Test Performance of Air Filter Units

3. Air-Conditioning and Refrigeration Institute (ARI):

a. 350 Sound Rating of Non-Ducted Indoor Air-Conditioning Equipment
b. 410 Forced-Circulation Air-Cooling and Air-Heating Coils
c. 430 Central-Station Air-Handling Units
d. 440 Room Fan-Coil Air-Conditioners

4. American Society of Heating, Refrigerating and Air-Conditioning Engineers (ASHRAE):

a. 15 Safety Code for Mechanical Refrigeration

5. National Electrical Manufacturers Association (NEMA): Except for motors, provide electrical components required as part of air handling units, which comply with NEMA Standards.

6. National Fire Protection Association (NFPA): Provide air handling unit internal insulation having flame spread rating not higher than 25 and smoke developed rating not higher than 50:

a. 70 National electrical Code
b. 90A Standard for the Installation of Air Conditioning and Ventilating Systems
c. 90B Standard for the Installation of Warm Air Heating and Air Conditioning Systems

7. Sheet Metal and Air Conditioning Contractors' National Association, Inc. (SMACNA): Comply with applicable SMACNA standards including "HVAC Duct Construction Standards - Metal and Flexible."

8. Underwriters Laboratories, Inc. (UL): Except for motors, provide electrical components required as part of air handling units, which have been listed and labeled by UL.

1.05 SUBMITTALS

A. Product Data: Submit manufacturer's technical product data for air handling units showing dimensions, weights, capacities, ratings, fan performance with operating point clearly indicated, motor electrical characteristics, and finishes of materials, installation instructions, sound and vibration test report, and bearing life calculations.

B. Shop Drawings: Submit shop drawings showing unit dimensions, weight loadings, required clearances, field connection details and methods of support. Draw to a scale of 1/4” per one foot. Include field fabricated mixing boxes, dampers and duct connections.

C. Maintenance Data: Submit maintenance instructions, including instructions for lubrication, filter replacement, motor and drive replacement, and spare parts lists. Include this data, product data, shop drawings, and wiring diagrams in operating and maintenance manuals.

1.06 ENVIRONMENTAL REQUIREMENTS

A. Do not operate units for any purpose, temporary or permanent, until ductwork is clean, filters are in place, bearings lubricated, and fan has been test run under observation.

1.07 DELIVERY, STORAGE, AND HANDLING

A. Deliver unit to the site in containers with manufacturer's stamp or label affixed.

B. Store and protect equipment and products against dirt, water, chemical, and mechanical damage. Do not install damaged unit - remove from project site.

1.08 WARRANTY

A. Provide one-year (12 months) warranty. The warranty shall include parts, labor, travel costs, and living expenses incurred by the manufacturer to provide factory authorized service.

1.09 SAFETY PROVISIONS

A. Provide all open drives and fan wheels subject to maintenance and potential entanglement with protective guards or screens meeting OSHA requirements.

PART 2 - PRODUCTS

2.01 GENERAL FAN REQUIREMENTS

A. Construction, Rating and Testing: Provide fans constructed and factory tested in accordance with the Air Moving and Conditioning Association (AMCA). All fan wheels shall be statically and dynamically balanced. Size and capacity as indicated on the Drawings. Provide extended bearing lubrication fittings where necessary to assure accessibility of all lubrication points.

B. Motors and Drives: Provide premium efficiency drip-proof motors with temperature rise not greater than 40 degrees C above ambient temperature. Provide belt drive assembly capable of 150% of the motor rated horsepower on one less than the total number of belts, for belt drives with two or more belts. All drives shall have adjustable sheaves to allow adjustment of ±20%. Provide two speed, two winding motors where indicated on schedules.

C. Accessories: Provide, as indicated on the Drawings and specified in other paragraphs of this Section, all related accessories to match the fan section, including access sections, diffusion sections, transition sections, flexible connections, vibration eliminators, and belt guards.

D. Submissions: For shop drawings include complete dimensional and physical data, CFM, SP, HP, discharge arrangement, rotation, class, base details, and fan curves.

2.02 SMALL CABINET FANS (CEILING MOUNTED AND INLINE CABINET)

A. Ceiling mounted exhaust fans:

1. Manufacturer: Cook GC, Greenheck, Penn of equivalent performance.

2. General: Provide centrifugal direct drive type ceiling exhaust fan. The fan wheel(s) shall be of the forward curved centrifugal type and dynamically balanced.

3. Noise Data: Provide sone or octave band noise values at the required air delivery.

4. Fan Housing: The fan housing shall be constructed of heavy gauge galvanized steel. The housing interior shall be lined with 1/2 inch acoustical insulation. The outlet duct collar shall include an aluminum backdraft damper on all sizes and shall be spring loaded on larger units above 200 cfm.

   a. Integral backdraft damper shall be totally chatterproof with no metal-to-metal contact.
   b. Entire fan, motor and wheel assembly shall be easily removable without disturbing the housing.
   c. Outlet shall be adaptable for horizontal or vertical discharge.

5. Motor speeds shall not exceed 1100 RPM and all fan motors shall be suitably grounded and mounted on rubber-in-shear vibration isolators.

6. Grille: For 300 cfm and smaller fans the grille shall be constructed of high impact polystyrene and for larger sizes the grille shall be constructed of aluminum. Grilles shall be non-yellowing.

7. The access for wiring shall be external. The motor disconnect shall be internal and of the plug in type. The motor shall be mounted on vibration isolators.

8. All fans shall bear the AMCA Certified Ratings Seal for sound and air performance and shall be UL/cUL Listed.

B. Duct mounted cabinet fan

1. Manufacturer: Cook GN, Greenheck, Penn of equivalent performance.

2. General: Provide centrifugal direct drive type inline fan. The fan wheel(s) shall be of the forward curved centrifugal type and dynamically balanced.

3. Noise Data: Provide sone or octave band noise values at the required air delivery.

4. Fan Housing: The fan housing shall be constructed of heavy gauge galvanized steel. The housing interior shall be lined with 1/2 inch acoustical insulation. The outlet duct collar shall include an aluminum backdraft damper on all sizes and shall be spring loaded on larger units above 200 cfm.

   a. Integral backdraft damper shall be totally chatterproof with no metal-to-metal contact.
   b. Entire fan, motor and wheel assembly shall be easily removable without disturbing the housing.
   c. Outlet shall be adaptable for horizontal or vertical discharge.

5. Motor speeds shall not exceed 1100 RPM and all fan motors shall be suitably grounded and mounted on rubber-in-shear vibration isolators.

6. Grille: For 300 cfm and smaller fans the grille shall be constructed of high impact polystyrene and for larger sizes the grille shall be constructed of aluminum. Grilles shall be non-yellowing.

7. The access for wiring shall be external. The motor disconnect shall be internal and of the plug in type. The motor shall be mounted on vibration isolators.

8. All fans shall bear the AMCA Certified Ratings Seal for sound and air performance and shall be UL/cUL Listed.

2.3 GRAVITY ROOF VENT

A. General: Roof vent to be Greenheck, Carnes, Cook, Penn or Western Vent, United Enertech approved equal.

B. Type: Based on scheduled vent on drawings.

C. Sizing: Pressure drop less than or equal to 0.09"w.g.

D. Required Accessories: Prefab roof curb, backdraft damper, bird screen, and removable hood.

PART 3 - EXECUTION

3.01 INSTALLATION

A. Coordinate motor starters with Div. 26 and control contractor.

B. Install in accordance with manufacturer's instructions.

C. Examine site to verify if site is ready to receive work. Provide layout drawings of air handlers and fan locations to electrical installer.

D. Install unit on vibration isolators.

E. Install 3" flexible duct connection at inlets and outlets of units.

F. Control installers shall install all wiring associated with control signals into the fan starters.

G. Electrical installer shall install all line voltage power wiring and conduit. Coordinate with Division 26 work.

3.02 MANUFACTURER'S START-UP SERVICES

A. The manufacturer shall provide start-up service in the form of a factory trained service technician. The service technician shall verify correct installation, verify unit mounting, verify fan rotation, verify spring isolator adjustments, verify control wiring, verify power wiring, start-up the fans, and check for proper operation. The service technician shall provide final adjustments to meet the specified performance requirements. Fully staffed parts and service personnel shall be within four hours travel from the job site.

END OF SECTION

MINI-SPLIT AIR CONDITIONING UNITS

SECTION 238125

PART 1 - GENERAL

1.1 APPLICABLE REQUIREMENTS

A. All work to be furnished and installed under this section shall comply with all the requirements of General Conditions, Supplemental Conditions, Division 01 - General Requirements, Section 230500 - Basic Materials and Methods, and other Sections in Division 23 specified herein.

1.2 SCOPE

A. All work to be furnished and installed under this Section shall comply with all the requirements of Division 01, and shall include, but not necessarily be limited to, the following:

1. Split air conditioning unit.

2. Controls and control connections.

3. Electrical power connections.

1.3 RELATED WORK SPECIFIED ELSEWHERE

A. Section 230500: Basic Materials and Methods

B. Section 230593: Testing, Adjusting and Balancing

C. Section 230700: Mechanical Insulation

D. Section 232300: Refrigerant Piping Systems

E. Section 233113: Air Distribution

F. Division 26: Electrical

1.4 QUALITY ASSURANCE

A. Manufacturer's Qualifications: Provide packaged units that are the standard product of an equipment manufacturer regularly engaged in the production of such units who issues complete catalog information on such products. Units shall not be fabricated by the Contractor.

B. Codes and Standards: Provide air handling units conforming to the requirements of the latest addition of the following:

1. Air Movement and Control Association (AMCA):
   a. 99 Standards Handbook
   b. 210 Laboratory Methods of Testing Fans for Rating [Unit shall bear AMCA Certified Rating Seal]

2. Air-Conditioning and Refrigeration Institute (ARI):
   a. 210 Unitary Air-Conditioning Equipment
   b. 270 Sound Rating of Outdoor Unitary Equipment

3. National Electrical Manufacturers Association (NEMA): Except for motors, provide electrical components required as part of air handling units, which comply with NEMA Standards.

4. National Fire Protection Association (NFPA): Provide unit internal insulation having flame spread rating not higher than 25 and smoke developed rating not higher than 50:
   a. 70 National Electrical Code
   b. 90A Standard for the Installation of Air Conditioning and Ventilating Systems
   c. 90B Standard for the Installation of Warm Air Heating and Air Conditioning Systems

5. Sheet Metal and Air Conditioning Contractors' National Association, Inc. (SMACNA): Comply with applicable SMACNA standards including "HVAC Duct Construction Standards - Metal and Flexible."

6. Underwriters Laboratories, Inc. (UL): Except for motors, provide electrical components required as part of units, which have been listed and labeled by UL.

1.5 SUBMITTALS

A. Product Data: Submit manufacturer's technical product data for systems with air handler units, evaporator coils, and outdoor condensing units showing dimensions, weights, capacities, ratings, fan performance with operating point clearly indicated, motor electrical characteristics, finishes of materials, installation instructions, sound and vibration test report, and bearing life calculations.

B. Maintenance Data: Submit maintenance instructions, including instructions for lubrication, filter replacement, motor and drive replacement, and spare parts lists. Include this data, product data, shop drawings, and wiring diagrams in operating and maintenance manuals; in accordance with requirements of Division 01.

1.6 ENVIRONMENTAL REQUIREMENTS

A. Do not operate units for any purpose, temporary or permanent, until ductwork is clean, filters are in place, bearings lubricated, and fan has been test run under observation.

1.7 DELIVERY, STORAGE, AND HANDLING

A. Deliver products to site under provisions of Division 01. Deliver units to the site in containers with manufacturer's stamp or label affixed.

B. Store/protect products under provisions of Division 01. Protect units against dirt, water, chemical, and mechanical damage. Do not install damaged units - remove from project site.

1.8 WARRANTY

A. Provide general one year (12 months) warranty from date of installation and five (5) year warranty on compressors under provisions of Division 01. The warranty shall include parts, labor, travel costs, and living expenses incurred by the manufacturer to provide factory authorized service.

PART 2 - PRODUCTS

2.1 SPLIT SYSTEM AIR CONDITIONING UNIT WITH INDOOR FAN COIL

A. Acceptable Manufacturers: Mitsubishi, Sanyo, or approved equal.

B. Indoor Fan Coil Unit

1. General:
   a. Factory fabricated fan coil units of the size, type configuration and capacity as scheduled on the drawings. Units shall be self-contained, factory assembled and pre-wired with condensate pump.
   b. All pressure drops, horsepowers and dimensions shown are maximum allowable. All capacities shown are minimum allowable. All units must have AMCA certified performance data for fans tested in the unit casings. Bare fan certification without casing is not acceptable.
   c. Manufacturers unable to meet this criteria will only be considered as an alternate to specified and as a deduct to base bid. Manufacturers listed by name do not imply that their standard construction meets the specifications nor that they are approved. All manufacturers are required to meet all details of this specification without exception.

2. Unit cabinet shall be galvanized steel with powder coated baked enamel finish.

3. Fan Assembly
   a. Direct-drive, double-inlet fan wheels shall have forward-curved blades, and be statically and dynamically balanced, with scrolls and fans constructed of galvanized steel.
   b. Rotating assembly shall provide a rigid support for motor and fan assembly. Assembly shall be accessible and entire assembly shall be removable for maintenance.
   c. Motor shall be minimum two speed permanent split capacitor type.

4. Coils shall be ARI certified. All coil shall constructed of non-ferrous seamless copper and pressure tested in the factory.

5. Filter shall be one inch thick pleated.

6. Unit Suspension: Units shall be provided with factory welded mounting clips for mounting of units.

7. Electrical: The unit electrical power shall be 115 volts, 1 phase, 60 hertz.

8. Controls
   a. Unit shall have a wired controller to perform input functions necessary to operate the system.
   b. The controller shall consist of an On-Off switch, Cool/Dry-Fan selector, Thermostat setting, Timer Mode, High-Low fan speed, Auto Vane selector, Test Run switching and Check Mode switching.
   c. Temperature changes shall be by 2°F increments with a range of 65 - 87°F.
   d. The control system shall consist of two (2) microprocessors interconnected by a single non-polar two wire cable.
   e. Wiring shall run direct from the indoor unit to the controller with no splices.
   f. Manufacturer shall provide 2 conductor 18 Ga. stranded wire for connection to remote controller.
   g. The microprocessor located in the indoor unit shall have the capability of sensing return air temperature and indoor coil temperature, receiving and processing commands from the wired controller, providing emergency operation and controlling the outdoor unit.

h. Normal operation of the remote controller provides individual system control in which one remote controller and one indoor unit are installed in the same room.
i. The control voltage from the controller to the indoor unit shall be 12 volts, DC.
j. The control voltage between the indoor unit and the outdoor unit shall be 12 volts, DC.
k. The system shall be capable of automatic restart when power is restored after power interruption.
l. The system shall include self-diagnostics including total hours of compressor run time.
m. The microprocessor within the wall mounted remote controller shall provide automatic cooling, display set point and room temperature, 24 hour on/off timer so that automatic operation function display, check mode for memory of most recent problem.

C. Outdoor Condensing Unit:

1. General: Provide remote outdoor compressor units consisting of hermetic compressor with overload protection, direct drive condenser fan, aluminum fin/seamless copper tube coil, strainer, high and low pressure switches, accumulator, and thermostatic expansion valve.

2. Low Ambient Control: System shall be capable of operating at 0ºF ambient temperature.

3. Unit Cabinet: Galvanized steel with powder coat enamel finish.

4. Condenser Fans: Direct drive propeller type. Motors to be totally enclosed, single phase, with Class B insulation and permanently lubricated bearings. Fan shall be mounted for low noise. Fan blades to be statically and dynamically balanced.

5. Coil: Aluminum fins mechanically bonded to copper tubes.

6. Refrigerant Components: Liquid tube shutoff valve with sweat connection, suction tube shutoff valves with sweat connection, R-22 refrigerant, and accumulator.

7. Compressor: Hermetically sealed two-speed compressor mounted on rubber mountings. Protection to include internal thermal overloads. An internal pressure relief valve to provide high-pressure protection to the refrigerant system. Provide external service valves for the refrigerant circuit. A crankcase heater shall be factory mounted on the outside of the compressor.

8. Electrical: Unit electrical power shall be 208/230 volts, 1 phase, 60 hertz. The outdoor unit shall be controlled by the microprocessor located in the indoor unit. The control voltage between the indoor unit and the outdoor unit shall be 12 volts, DC.

PART 3 - PRODUCTS

3.1 EXAMINATION

A. Verify that mounting surfaces are ready to receive work.

B. Verify that proper power supply is available.

3.2 INSTALLATION

A. Install in accordance with manufacturer's instructions.

B. Provide layout drawings of units, locations and power requirements to electrical installer.

C. Install air filters in unit during installation phase. Do not operate the unit without filters in place.

D. In the case of suspended units, mount the fan coil units on springs or from spring hangers as required and as shown on Drawings. Provide Mason #DNHS combination isolator hangers to fully support horizontal units hung from building framing.

E. Provide 4" high concrete pad extending 6" beyond edge of condensing unit on all sides. Attach condensing unit to concrete pad with concrete anchors and angle brackets.

F. Install condensate drain piping and traps in accordance with manufacturer's instructions and as shown on the Drawings.

G. Install copper refrigerant piping and insulate lines.

H. Install controller and all wiring associated with control signals between air handling unit and condensing unit. Conceal low voltage wiring in building structure, or inside the refrigerant pipe insulation, or in conduit.

I. Electrical installer shall install all line voltage power wiring and conduit. Coordinate with Division 26 work.

J. Install a new set of filters prior to final air balance and substantial completion.

3.3 MANUFACTURER'S START-UP SERVICES

A. The manufacturer shall provide start-up service in the form of a factory trained service technician. The service technician shall verify correct installation, verify unit mounting, verify fan rotation, verify spring isolator adjustments, verify control wiring, verify power wiring, start-up the fans, and check for proper operation. The service technician shall provide final adjustments to meet the specified performance requirements. Fully staffed parts and service personnel shall be within four hours travel from the job site.

END OF SECTION

ELECTRICAL

SECTION 260000

PART 1 - GENERAL

1.1 GENERAL REQUIREMENTS

A. Requirements of Division 01 shall apply to this section.

B. These General Requirements apply to entire Division 26 and to electrical work, material and equipment specified in other divisions.

1.2 SCOPE

A. Work under this section consists of all labor, material, equipment, services, permits, fees and transportation necessary for, and/or reasonably incidental to, the construction and completion in working order of electrical work shown on the accompanying drawings and/or specified herein.

B. Work includes, but is not limited to, the following:

1. Coordination with utility company to provide service to the facility. All work not provided by utility company required to render service to the site. Utility company service charges.

2. Primary and secondary service conduit from point of utility company service to facility service equipment. Precast pads for utility company transformer. Pull boxes.

3. Distribution systems for power and lighting.

4. Grounding system for service and equipment.

5. Lighting system including fixtures, lamps, supports, outlets, devices, plates, branch circuiting and control.

6. Outlet system including outlets, devices, plates and branch circuiting.

7. Public telephone service conduits from point of utility company service to main telephone terminal. Pull boxes.

8. Telephone and data raceway system including raceways, outlets, pull wires, sleeves, terminals, grounding.

9. Conduit and wiring system for heating, ventilating, air conditioning and plumbing, including connection, disconnect switches and items of industrial control (where not part of package controls). Connection to air conditioning packaged controls furnished under Division 23.

10. Conduit and wiring for HVAC control where not furnished under mechanical section.

11. Conduit, wiring, outlets, devices and connections to electrical equipment furnished under other sections or by Owner for a complete installation. Installation of controls furnished under other sections.

12. Elevator power and lighting system. Provisions for communications. Ionization detectors and wiring to elevator controls (where not under Life Safety Fire Alarm Section). Elevator monitoring conduit.

13. Code required access panels to electrical equipment in concealed locations. Location coordinated with Architect.

14. Excavation and backfill for work under this section.

15. Precast pull boxes and transformer pads, pull irons, cable racks, concrete conduit encasement.

16. Templates and coordination of installation of formed concrete for electrical work such as concrete bases, trenches, equipment pads, light pole foundations, curbs.

17. Shop drawings, wiring diagrams, equipment data, record drawings, operation manuals.

18. Hanger, anchors, sleeves, chases, core drilling, metal supports, channels, plywood backing, vibration isolation, seismic bracing, as required for work under this section.

19. Cleaning, patching, repairing and touch up painting as required for work under this section.

20. Permits and fees.

21. Testing, adjusting of completed work, inspections and instruction.

22. Temporary power and lighting for work under this section.

23. Emergency standby power and/or lighting system.

24. Signal and communication empty raceway and outlet systems. Equipment and wiring under other sections or by Owner.

1.3 RELATED WORK SPECIFIED ELSEWHERE OR BY OTHERS

A. Temporary service and wiring except as required for this section (Division 01).

B. Setting of motors furnished under other divisions (Trades).

C. Finish painting of flush mounted electrical equipment in public areas (Section "Painting").

D. Formed concrete except templates (Section "Concrete").

E. Furnishing of variable speed controllers (Division 23).

F. Furnishing of packaged air conditioning controls (Division 23).

G. Telephone cable and instruments (utility company or Owner).

H. Signal and communication systems wiring and equipment (separate section or by Owner).

I. Primary and/or secondary service conductors, service meter (coordinate with utility company).

J. Elevator motors and controls (Section "Elevators").

K. Building automation, fire alarm and security system (separate section).

1.4 LEGAL REQUIREMENTS AND STANDARDS

A. Codes and regulations: Comply with applicable sections of national, state and local codes, laws, ordinances, rules and regulations of authorities having jurisdiction, including:

1. California Energy Commission (CEC).

2. California State Building Code, Title 24.

3. City and State Electrical Codes. Applicable portion of local Building Codes.

4. National Electric Code (NEC).

5. National Fire Protection Association (NFPA).

6. Occupational Safety and Health Administration (OSHA).

7. Serving utility company (service and metering requirements).

8. State and local fire regulations and requirements.

9. Underwriters' Laboratories, Inc. (UL).

B. Standards: Comply with latest editions of applicable regulations and standards of:

1. American National Standards Institute (ANSI).

2. American Society for Testing and Materials (ASTM).

3. Certified Ballast Manufacturers (CBM).

4. Energy Policy and Conservation Act (EPCA) National Energy Conservation Amendments (NAECA).

5. Institute of Electrical and Electronics Engineers (IEEE).

6. Insulated Cable Engineers Association (ICEA)

7. National Institute of Standards and Technology, (NIST).

8. National Electrical Manufacturers Association (NEMA).

9. National Electrical Testing Association (NETA).

10. National Uniform Seismic Installation Guidelines (NUSIG).

C. Minimum Requirements:

1. Comply with the requirements of authorities and listed standards as minimum acceptable work. In case of conflict between the requirements, the most stringent govern.

2. The drawings and specifications take precedence when they call for materials or construction of better quality or larger size then required by codes, laws, rules and regulations.

D. Permits: Obtain permits and inspections, and pay for all fees, unless otherwise specified. Deliver all certificates of inspection to the Architect.

E. Guarding:

1. Provide protection for moving parts and hazardous conditions.

2. Provide industrial accident and warning signs per ANSI and OSHA.

3. Erect and maintain suitable barriers, protective devices, lights and warning signs for the protection of the public and employees from the work under this section.

4. Conform with applicable safety regulations, including those of the Architect and Owner.

1.5 SERVICES

A. Provide all labor and material, not furnished by the public utility companies, required to render service to the project from utility company service points. Verify service charges (e.g., excess facilities, cable) and requirements, and pay all costs thereof, unless specified otherwise.

B. Ground service transformer, and service switchboard as detailed and specified and per utility company and code requirements. Provide ground at public telephone main terminal.

C. Verify exact location of utility service points. Install primary and secondary conduit and terminate as specified and as directed by the utility company. Provide duct banks for utility company service conductors as indicated and specified and not less than utility company standards. Obtain utility company approval for duct installation.

D. For utility service conduit, provide sweep radii per utility company standards but not less than specified.

E. Verify construction details of transformer pads, service switchboards, conduit and cable details, and service related work with respective utility company and observe utility company standards. Obtain written utility company approvals prior to construction and submit evidence of approval.

F. Upon award of the contract, notify the public utility companies and supply them estimated completion date of the work and desired service date. Supply electric utility with required data regarding electrical loads.

G. Obtain settings of utility company primary devices and coordinate main breaker settings with utility company devices.

1.6 SUBSTITUTION OF MATERIALS

A. The applicable paragraphs of General Requirements, Division 1, shall apply herein. Substitutions after award of the contract will not be considered.

B. Basis for Design: Manufacturer's names, products and numbers listed on the drawings or in these specifications, along with specific descriptions in these specifications, set the standards of quality and performance. Select products of one of the listed manufacturers meeting these standards and modify standard catalog items where required to meet specifications. Provide specified material and equipment unless specifically approved otherwise.

C. Equivalence: The phrase "or equivalent by" followed by manufacturer's name means that this manufacturer's product shall match the performance, construction, fit and features specified.

D. Substitutions: Submit proposed substitutions along with alternate price, complete descriptive data and a comparison of the substitute manufacturer's product with specified product. In proposing a substitution, assume full responsibility for any associated modifications in building

openings, circuiting, control wiring, and space considerations, and bear all costs. Architect reserves right to reject any proposed substitution.

E. Liability of Substitutions: Substituted items to perform equivalent to or better than the item used for basis for design, and meet all requirements of above "or equivalent by" clause. Should the substituted item fail to perform in accordance with specifications, replace with the originally specified item without extra compensation.

1.7 SUBMITTALS OF MATERIALS AND EQUIPMENT

A. General: Make submittals in accordance with the General Conditions, in order as listed. Submit material list, and obtain review, prior to submission of manufacturer's data and shop drawings.

B. Submittals: Piecemeal submittals will not be acceptable. Submit in brochure form with all listings referenced to applicable paragraph in the specifications.

C. Review: Submittals will be reviewed for general design only, and not for method of assembly, erection, construction, or detailed compliance with Contract Documents.

D. Condition of Acceptance of Submittals: No deviation from Contract Documents is permitted unless specifically so noted by Contractor and accepted by Architect in writing.

E. Contractor Responsibility:

1. Error or omissions in submittals regardless of review status of submittals.

2. Coordination with work of other trades.

3. Space coordination and maintenance of code required aisle space.

4. Erection and installation techniques, including structural adequacy and bracing suitable for stability and/or seismic conditions.

5. Maintenance of installation safety.

6. Satisfactory performance of all work.

F. Material List: Submit complete list of materials and equipment proposed for the job, including manufacturer's name, referenced to applicable sections and paragraphs of the specifications. List only names of proposed manufacturer. Catalog numbers and performance data are not required and will not be reviewed prior to complete submission.

G. Manufacturer's Data:

1. Submit with associated shop drawings.

2. For material specified to meet trade standards of Federal Specifications, furnish the manufacturer's or vendor's certification that the material furnished for the work equals or exceeds referenced standards or specifications.

3. Furnish certification from suppliers and/or manufacturers of materials and equipment that such items meet or exceed the requirements of the drawings and specifications.

4. Submit performance curves of equipment such as engine generators, motor generators and uninterruptible power supplies.

H. Shop Drawings and Reports:

1. Identify with project name, number and item designation as indicated on drawings. Reference to applicable paragraphs of the specification.

2. Submit legible reproducible transparency and two prints minimum for Architect's record. Make necessary prints of reviewed transparency for distribution. If reproducible is not available, submit a minimum of six copies of catalog cuts.

3. Prior to submission, check all shop drawings for conformance with requirements of latest issue of the drawings and specifications, including bulletins and change orders, and against available space. Obtain public utility company approval of service metering and indicate on shop drawing. Have motor control centers reviewed by respective mechanical trades for motor size and control coordination. Have submittals signed by all reviewing parties. Make required corrections before forwarding to the Architect for review.

4. Include dimensional data, weights, ratings, construction details, center of gravity, component descriptive data and sufficient information to illustrate compliance with the specifications. List labeling and approving agencies and standards of design employed in manufacture.

I. Required Submittals: Submit shop drawings and technical data on all equipment and auxiliary systems in sufficient detail to indicate conformance with the drawings and specifications, including but not limited to:

1. Switchboards and metering facilities, including data on all components used in gear.

2. Distribution boards, branch circuit panelboards, terminal cabinets.

3. Installation drawings.

4. Life safety fire alarm, signal and communication systems components, wiring diagrams, conduit and outlet diagrams, system function description.

5. Catalog cuts of interior and exterior lighting fixtures, shop drawings of custom fixtures. Include finish data, socket specifications, metal gauge, diffuser specifications, independent test laboratory photo metric data, agency labeling, weight, suspension system details. Indicate compliance with general and specific specification requirements, ballast specification and coordination with ceiling system construction.

6. Transformers, including test data.

7. Motor control assemblies, components, construction details, internal wiring diagrams, interlocking diagrams. Variable frequency drives. Obtain mechanical trade information and approval prior to submission.

8. Emergency systems, wiring and interwiring diagrams.

9. Wiring devices, all types and ratings.

10. Control devices, controllers.

11. Occupancy sensors.

12. Low voltage lighting control system.

1.8 INSTALLATION DRAWINGS

A. Prepare dimensionally accurate floor plans of each electrical and signal room and/or closet, fire control room and the like, drawn to 1/4" scale minimum. Submit legible reproducible transparencies for review with two prints for Architect's record. Indicate all equipment within the rooms to scale based on shop drawing data, include structural support for suspended equipment and description of seismic bracing and fastening. Indicate system and equipment grounding details as applicable. Review elevator machine room shop drawings and coordinate location of electrical gear to maintain clearances. Submit with shop drawings.

B. Where conduit runs, 2" trade size and larger, are run in exposed locations, prepare dimensionally accurate floor plans indicating routing, coordinated with work of other trades and the structure. Submit legible reproducible transparencies with two prints for review.

1.9 RECORD DRAWINGS

A. Record of Job Progress: Provide and maintain in good order a complete legible set of blue line electrical contract drawings available at the site for inspection. Keep an accurate dimensional record of installed locations and all job changes, including source and date of authorization.

B. Record of Installation: At the conclusion of the work, purchase from the Architect a set of electronic (Auto Cad) files of electrical drawings and have incorporated by a competent CAD operator all installed data in a clearly legible manner utilizing contract drawing symbols and notations.

C. Include in Record Drawings the Following:

1. Corrected panel schedules indicating installed condition. Installed typed schedules reflecting installed conditions in panels.

2. Revisions, including sketches, bulletins, change orders, written addenda and directives, clarifications and responses generated by requests for information (RFIs), regardless of source of the revision.

3. Physical routing of feeders and conduits 2" trade size and larger, underground, exposed and above ceilings.

4. Location of underground conduit below building and on exterior, and stubouts dimensioned from building structure.

5. Location of site service conduits, pull boxes and transformer pads by elevation and dimensioned from buildings and permanent structures.

6. Location of floor mounted outlets, dimensioned from fixed building features.

1.10 SPARES, SPARE PARTS, SPECIAL TOOLS

A. Provide to Owner as specified in other paragraphs of the specification and as outlined herein.

B. Obtain receipts and include copy with Operating and Maintenance Instruction Manual(s).

C. Provide lists of each category describing type, rating and use and include lists with Operating and Maintenance Instruction Manual(s).

D. Breaker Lockout/Lockon Devices: One for each six panelboard circuit breakers or as noted, whichever is greater.

E. Receptacle Plugs: One for each receptacle excluding NEMA 5-15R and 5-20R types, unless otherwise noted.

F. Special Tools: Provide, as standard accessories, tools not readily available in commercial market required for assembly, adjustment and/or maintenance of equipment provided under this section.

G. Paint cans for touch up of factory finished gear, including switchboards, panelboards and the like. Label each can with identify of associated gear.

1.11 OPERATING AND MAINTENANCE DATA

A. General: As a condition for final acceptance of the system, submit to the Architect a minimum of three copies of each of the following documents, complete and at one time, in looseleaf three ring binders with permanent covers, identified, indexed and cross-referenced to the specifications. On the edge of the binder, identify the project, year of construction and equipment involved. Where practical, data may be combined in comprehensive manual.

B. Maintenance Instruction - Include:

1. Complete record material list.

2. Catalog brochures for all components.

3. Motor starter overload schedules.

4. Test reports.

5. Manufacturer's directions and conformance certificate.

6. Guarantee and warranties.

7. Inspection certificates.

8. Spare parts lists.

9. Reports on instruction of Owner's personnel.

10. Wiring and block diagrams, where applicable.

11. Detailed checkout procedures to insure operation of systems and gear.

12. Diagnostic and troubleshooting procedures for systems and major equipment.

13. Recommended preventive maintenance program, including a list of mechanical items requiring inspection and servicing.

C. Operation Instruction - Describe:

1. Start-up, checkout and shutdown procedures.

2. Emergency operation capability and procedures

3. Time switch operating schedule.

D. Shop Drawings - Include: Complete set of record shop drawings, cuts and brochures.

1.12 VERBAL INSTRUCTIONS

A. Upon completion of the work, provide an engineer from each supplier of major equipment or system to instruct Owner's designated operating personnel using the Operating and Maintenance data. Include both classroom instruction and on-the-job training, conducted before and during the system test period. Provide instruction proportional to the complexity of the system, but not less than one day.

B. Submit written report to Owner with copy to Architect, for each instruction period indicating date and time of instruction, and personnel being instructed and signed by personnel participating.

1.13 INSPECTIONS

A. In addition to required service calls, make a minimum of two inspections accompanied by operating personnel, within the warranty period, at no expense to the Owner, to insure that all systems are maintained properly and in satisfactory operating condition.

B. Submit written reports to Owner with copy to Architect, signed by operating personnel witnessing inspection, and indicating inspection results.

1.14 COMPLETION

A. Before Final Review: The work hereunder will not be reviewed for final acceptance until Operating and Maintenance Data, Manufacturer's Literature, Identification, Warning Signs and Nameplates specified herein have been reviewed and/or properly posted in the building and final cleaning has been completed.

B. Before operating any equipment for demonstration or test, comply with manufacturer's preparation instructions.

C. Demonstration of Operations: When the installation is complete and required adjustments have been made, operate the systems for a period of one week. During this time demonstrate to the Owner's representative that systems are completed and operating and performing in conformance with these specifications.

1.15 GUARANTEES AND WARRANTIES

A. Comply with guarantee requirements of Division 01.

B. Guarantee all material, equipment and work for a period of one year (or greater where specified elsewhere) from written acceptance of the work, against defects of any kind, covering all parts.

C. Obtain guarantees and/or warranties for factory assembled equipment and include with Operation Instruction Manual.

D. In the event of failure of any work, equipment, or device during the life of the guarantee and at no cost to Owner, repair or replace the defective work and remove, replace or restore any parts of the structure or building which may be damaged as the direct result of the defective work or in the course of making the replacement of defective work materials.

1.16 PRELIMINARY OPERATION

A. The Owner reserves the right to operate portions of the electrical system on a preliminary basis without voiding the guarantee or relieving the Contractor of his responsibilities.

1.17 ALLOWANCES, UNIT PRICES, ALTERNATE

A. Allowances: Include quantity or dollar allowances where indicated on the drawings or elsewhere in the specifications, along with appropriate additional allowance for installation, overhead and profit.

B. Unit Prices: Submit a list of unit prices for adjustments in the scope of work where requested elsewhere in the specifications.

C. Alternates:

1. General: Submit with bid, along with associated cost adjustment, alternates requested herein or on the drawings and other alternates in accordance with terms of Division 1.

2. Architect reserves the right to reject alternate proposal.

PART 2 - PRODUCTS

2.1 GENERAL

A. Provide material and equipment of new and recent manufacture, currently UL labeled and/or listed for the specified use.

B. Where UL labeling is not available, provide certification by a Nationally Recognized Testing Laboratory (NRTL).

C. Use products of the same manufacture and type for each category of material and equipment.

2.2 RACEWAYS AND WIREWAYS

A. Rigid Conduit including Couplings, Locknuts, Nipples: Steel, hot-dipped galvanized inside and out after threading, galvanized, threaded malleable iron or steel fittings, notched locknuts with gripping teeth. Deliver with plastic thread protectors on exposed conduit threads.

B. Intermediate Metal Conduit including Couplings, Locknuts, Nipples: Steel, hot process galvanized outside, lacquered or enameled inside, galvanized threads, galvanized threaded malleable iron or steel fittings, notched locknuts with gripping teeth. Deliver with plastic thread protectors on exposed conduit threads.

C. Electric Metallic Tubing including Locknuts, Couplings and Connectors: Galvanized steel, lacquered or enameled interior; raintight gland ring compression type fittings, insulated throat connectors. Submit sample fittings for approval. Indenture fittings are unacceptable.

D. Flexible Conduit: Manufactured from single steel strip, galvanized on all four sides prior to fabrication, die cast twist-in connectors, UL listed for ground continuity. Reduced wall or aluminum flexible conduit is not acceptable.

E. Liquid Tight Flexible Conduit: Flexible galvanized steel core, with extruded polyvinyl chloride cover. Liquid tight insulated throat fittings to seal and ground conduit. Provide separate bond wire where integral ground conductor is not available.

F. Gutters and Wireways: Galvanized sheet steel, hinged covers, elbows and fittings without sharp edges or projections.

G. Nonmetallic Conduit: High impact 90°C polyvinyl chloride, Schedule 40 extruded to iron pipe sizes with factory spacers, couplings, bends and offsets. Plastic to plastic connections, tightly fitted and butted, cement welded utilizing tinted primer per ASTM F656 and heavy body,

medium set cement per ASTM D2564, in accordance with manufacturer's directions. Plastic to metal connection with UL listed adapters. Bell endings are not acceptable.

2.3 FITTINGS, OUTLETS AND JUNCTION BOXES

A. Provide bright new stock, stored where continuously protected from the weather and as described herein.

B. Outlet Boxes and Covers: Steel, knockout type, with full access screw-on covers or plaster rings, hot-dipped, galvanized, with cadmium plated or galvanized machine screws.

C. Cast Outlet Boxes: Cast ferrous metal construction, galvanized, complete with threaded hubs for rigid conduit, number and location as required, and plugs in unused hubs; gasketed cast covers; cast device plates suitable for indicated device; meeting NEC requirement for bending and permitted number of conductors; in hazardous area, approved for the class of hazard.

D. Small Junction and Pull Boxes: As specified for outlet boxes.

E. Large Junction or Pull Boxes: Galvanized code gauge sheet steel construction, with full access screwed on covers and cadmium plated or galvanized machine screws; minimum size per the governing electrical code or as noted on the drawings, whichever is greater; barriers for required separation; special configurations, where determined from field measurements to surmount structural conditions; factory painted with gray enamel. For flush mounting, extend covers 3/4" beyond edge of boxes. Where used for cable support, brace box to support cable weight. For junction boxes larger than 36" in any dimension, provide 3/4" diameter steel pipe cable supports with flanged ends with continuous fiber insulating sleeve and bolted to box frame, spaced on 36" centers maximum. For cover dimensions 3 ft. x 4 ft. or larger, provide two piece covers equipped with handles.

F. Junction Boxes on Exterior or Where Exposed to Moisture (e.g., Tunnels, Pits, Mechanical Rooms): Edges welded and ground smooth, leaving interior fillets; galvanized after fabrication; gasketed covers; stainless steel screws; factory painted with gray enamel. Gaskets to be factor made of an approved type.

G. Floor Mounted Junction or Pull Boxes: Heavy wall cast iron with flanged lip; galvanized; gasketed, screwed-on, watertight coverplate; drilled and tapped conduit openings as required; minimum size 6" square by 4" deep.

H. Floor Boxes:

1. Fully adjustable before and after installation.

2. Watertight cast iron units in slabs on grade. Galvanized steel, concrete tight, in suspended slabs.

3. Minimum volume of 30 cubic inches but not less than required for the number of conductors indicated considering any devices installed.

4. Compatible with slab thickness.

5. 4" diameter nominal, heavy brass coverplate with combination 2" and 1" plugs, or cover compatible with device. Gasket between adjusting ring and box.

6. Conduit entrances as required, plug unused openings.

7. Ganged units with barriers for multiple outlets or special types where indicated.

8. Brass carpet flange in carpeted areas.

9. For junction box use, provide conduit elbow with flush brass coupling for extension above floor.

10. For flush mounted duplex outlets, provide brass cover with individual hinged caps.

11. For floor mounted outlets, provide monuments as specified under Paragraph titled "Wiring Devices".

I. Backboxes: Refer to Communication and Signal Sections of the specifications. Provide outlet boxes of dimensions and configuration required for devices and equipment specified therein. Verify with equipment supplier.

2.4 CONCRETE PULL BOXES, TRANSFORMER PADS

A. Precast Concrete Pull Boxes Outside Building, Branch Circuiting: Where not otherwise noted or detailed, provide bottomless units with reinforced bolt down concrete cover; outside dimensions 13" by 19" by 12" deep minimum; in traffic areas, provide bolt down traffic covers. Provide minimum 12" depth of crushed rock or pea gravel below boxes for drainage.

B. Pull Boxes Distribution:

1. Provide precast concrete pull boxes where indicated, 48" square by 48" deep minimum dimensions, depth as required, complete with pull irons on four sides, conduit entry provisions on four sides, 8" diameter x 5" deep dry sump, two cable racks per side, galvanized steel frame and two piece, bolt down, cast iron or steel cover. Traffic type in traffic areas. Provide end bells for all ducts.

2. Racks to be hot dipped galvanized, equipped with adjustable hooks and porcelain insulators as required to separate feeders or signal systems, and keep conductors off bottom.

3. Paint cover and frame with two coats of asphaltum paint.

4. Caulk between sections and coat exterior with waterproof compound.

5. Set pull boxes on 6" deep gravel or sand bed, flush with paving in paved areas with paving sloping away from pull boxes. In unpaved areas locate boxes so that runoff water will not drain to pull box, set cover 2" above finished grade and provide 6" thick by 12" wide concrete apron around box, sloping away from cover.

6. Alternate: Poured in place pull boxes of equivalent characteristics may be provided. Submit structural details and calculation for review.

7. Identification: Cast system designation in covers in 2" size letters as directed. Secondary power - ELECTRICAL. Communications systems - SIGNAL.

C. Precast Transformer Pads:

1. Provide dimensions, configurations and accessories as indicated on drawings and as required.

2. For utility company transformers, comply with utility company requirements.

3. Where transformers are subject to vehicle damage, provide galvanized steel pipe barriers, 30" into concrete, 30" exposed, poured full of concrete, on 4' centers.

D. Hand Holes (Grounding): 10" round (I.D.) cast traffic box with cast iron or galvanized steel cover.

E. Submittals: Provide shop drawings. Include for pull boxes structural data, loading characteristics, accessories and boxes elevations of all sides, as constructed.

2.5 CONDUCTORS - 600V

A. GENERAL

1. Manufactured within eight (8) months of installation, of soft drawn copper of not less than 98 percent conductivity, conforming with ASTM Specification and NEC; 600V insulation unless specifically noted otherwise, of the type specified, standard American Wire Gauge (AWG) sizes.

2. Provide new conductors delivered to the site in original, unbroken packages, plainly marked or tagged with Underwriters' labels; size, type, insulation and voltage rating of the wire; name of manufacturing company and the trade name of the wire; date of manufacture.

B. Conductor Insulation:

1. XHHW-2, THHW/THWN in all locations.

2. For dry locations: XHHW, THHN/THWN. XHHW-2 in underfloor duct systems or electrified systems and below raised computer floors.

3. Connections to Recessed Fixtures from Remote Outlet in Wet Locations: XHHW-2, THWN-2.

4. Through Ballast Housings, and for Connections to Recessed Fixtures in Dry Locations: RHH, THHN, XHHW.

5. In Exposed Conduit on Roof or in Conduit Concealed under Roofing Material: MI (wet locations). Exception: Short conduit extensions (6' or less) to roof mounted equipment may be same as remainder of circuit.

6. For Communication and Signal Systems and for Control of Mechanical Equipment: THWN throughout unless otherwise specified herein or in other sections of the specifications.

7. For Pendants and Cords: Underwriters' Type SJ or SJO with ground wire, or as indicated.

8. On Load Side of Ground Fault Interrupter Circuit Breakers: Cross-linked polyethylene insulation with tape over conductors and dielectric constant of 3 or less. Submit cable data with shop drawings.

2.6 SWITCHBOARDS

A. GENERAL

1. Complete factory assembled, metal enclosed assembly with lifting means, consisting of the required number of 90" high (unless available headroom requires 78" height), self-supported, vertical sections, including pull and/or transition sections, bolted together to

form a floorstanding assembly, front and rear aligned. Service and feeder termination suitable for bus or wire connections as indicated. Rated for 75°C feeder and circuit wiring. Ratings as indicated on the drawings.

2. Device handle heights not to exceed 6'-6" above working surface (per NEC) considering installation on a 3" high concrete base pad.

3. Rodent proof ventilation as required to maintain allowable temperature rise at rated capacity.

4. Interfacing of external bus and/or cable conductors and control wiring with all related equipment supplied herein, under other sections of the work, or by utility company.

5. All devices, controls, auxiliaries, and instrumentation, as indicated on the drawings and as required for the specified function, assembled, interwired and pretested, prior to shipment, at the manufacturer's plant.

6. Switching and protective devices with visible means of ON-OFF identification.

7. Minimum RMS symmetrical rating of switchboards to be 25,000A (240V) and 22,000A (480V) but not less than 10% above available. Smallest device rating not less than switchboard rating.

8. Where switchboard circuit breaker trip ratings do not exceed 70A power panelboards may be used.

9. Anti-turn (two bolt), solderless, copper saddle type incoming and outgoing feeder terminals per paragraph titled "Connectors and terminations, Line Voltage Conductors".

10. Verify top or bottom entry and instruct equipment supplier.

11. Switchboard and device settings and ratings to be based on available short circuit capacity.

12. Submittals to include voltage/current rating, short circuit rating of board and devices, overall dimensions, available conduit space, circuit schedule, circuit numbers, device rating and description, conductor ratings, one line diagram with circuits numbered, nameplate schedule, equipment weight, motor center and control panel internal and interconnecting wiring diagrams, certification of conformance.

13. Shop drawings, operation and maintenance data, identification and testing as described in Part I.

B. Construction:

1. 12 gauge minimum sheet steel, phosphatized, primed and factory finished ANSI 61, with removable, screwed on, pan type, side, top and rear access plates, capable of being moved into installation position without deformation or damage, and bolted directly to the floor without use of floor sills. Seismically braced and bolted.

2. Full height vertical wiring compartments with hinged pan type access doors, top and bottom wiring compartments, cadmium plated or galvanized hardware and captive screws.

3. Drain roof of front access gear to front of gear and freestanding gear to rear of gear. Do not trap water on roof of gear.

4. On exterior provide outdoor construction with fully accessible, gasketed weatherproof front doors with three point latch and lock. Include integral space heater and exhaust fan, each controlled by thermostat and energized fused control transformer. Design outgoing cable and/or bus connections to maintain weatherproof integrity of gear.

C. Bussing:

1. Flat copper bussing, silver plated at joints, mounted on high impact, nontracking insulators braced for available fault current. Label boards for required short circuit rating.

2. Compression type bolts at all bus joints using a combination of flat and spring type washers.

3. Unreduced, fully rated horizontal bus for length of board, arranged for future expansion, and rated not less than the main device. Incoming bus rated not less than the main device or sum of main devices.

4. Full height vertical bus in all sections. Switchboard vertical bus rating equal to sum of devices and spare devices served, but not less than two-thirds of the horizontal bus rating for two sections or one-half for three or more sections.

5. A-B-C bus arrangements throughout, left to right, top to bottom, and front to rear.

6. Bus assembly to maintain UL clearances without reliance on any insulating material.

7. Full length copper equipment ground bus 1/4" by 2" cross section secured and bonded to each section of board, with terminals for feeder ground connections.

8. Fully rated neutral bus insulated from ground for all grounded neutral boards with a removable neutral bus link.

9. Horizontal bus located not less than 8" from front panels and bottom of boards.

D. Features:

1. Ground fault protection on main breakers for 480V switchboards of 1,000A and greater and for feeder breakers where indicated, coordinated so that feeder breakers trip before main breakers. Omit ground fault protection for emergency systems and ahead of fire pumps.

2. Zero sequence type ground fault protectors. Relay, field adjustable from adjustable delay from 6 to 30 cycles. Solid-state circuitry to shunt trip breakers. Monitor panel on face of switchboard with READY pilot light, ground fault indicator, reset button, provisions for field test without service interruption and alarm contact. Associated high temperature control wiring, isolated with barriers. Alternately, integral with breaker where indicated or specified.

3. 480V switchboards containing relays, shunt trip breakers or devices requiring control voltage, to have control power source for relay supply, consisting of a current limiting circuit breaker connected to main bus, and 480V to 120V, 0.5 KVA minimum rating, control transformer with secondary fusing.

4. Spare devices for all switchboards and motor control centers as indicated on the drawings, but not less than one for each board containing eight or more feeder devices and rated not less than the smallest feeder or branch device in the board.

5. Fully equipped spaces including bus extensions, drilling and tapping of busses, suitable dead plates, but less device connecting straps, as indicated, but not less than one per

switchboard and not less than one for each six devices or fraction thereof, rated not less than the smallest feeder or branch device in the board.

6. Devices and wiring connected ahead of mains or energized from external sources to be isolated with barriers and identified.

7. NEMA Type 13 dust tight and oiltight, transformer push-to-test type indicating pilot lamps with lamps replaceable from exterior.

8. Metering as indicated or specified.

E. Wiring:

1. No. 14 AWG minimum, NEC switchboard type, terminated with spade lugs on screw stud type terminal blocks, on bakelite frame.

2. Color coding reserving white for neutral and green for equipment ground. Colored tape identification is equivalent to colored insulation. Conductors fanned, laced and identified with number strips.

3. Isolate wiring from external sources and identify.

F. Circuit Devices: Types as designated on the drawings and meeting the requirements of applicable paragraphs of the specifications, short circuit rating not less than switchboard rating. Provide for padlocking in OFF position.

G. Switchboards of 2,500A and Lower Rating with Breakers 1,000A or Less: NEMA Class I, drip proof, front accessible, switchboard construction with flush group mounted devices connected and removed and maintained from the front, suitable for mounting with back against the wall. Weatherproof on exterior.

H. Services Switchboards: Pull section for underground service. Main and utility company metering section. For services 800A and larger, provide for utility company KWH and KVAR metering. Terminations per utility company standards. Minimum 50,000A symmetrical short circuit rating but not less than that available. Voltmeter and ammeter. Distribution sections with devices as indicated. Main breakers approved for 100% of nameplate rating, mounted in the switchboard. Where multiple main breakers are provided, label each main breaker. In 480V switchboards provide zero sequence ground fault protected feeder breakers coordinated so that feeder breakers trip before main breaker.

I. Distribution Switchboards:

1. Floorstanding switchboards for more than six devices.

2. Floorstanding or wall mounted units of panelboard construction for six or less devices (including specified spares and/or spaces).

2.7 METERING

A. Digital Metering:

1. Where indicated on the drawings, provide true RMS digital line metering and monitoring system consisting of a single microprocessor based unit capable of monitoring and displaying the following functions with the accuracy's indicated:

a. AC phase amperes - 1%.
b. AC phase to phase and phase to neutral voltage - 1%.

c. Watts - 2%.
d. VARS - 2%.
e. Power factor - 4%.
f. Frequency - 0.5%.
g. Watthour - 2%.
h. Watts demand, with 5, 10, 15 and 30 minute intervals - 2%.

2. Device to auto range between units, kilo-units and mega-units, provide the capability to communicate data over a twisted pair network, be UL recognized, CSA certified and meet ANSI Standard C37.90.

3. Input ranges to accommodate current transformers with ratios of 100/5 through 5000/5 amperes. Provide three external current transformers with ratios as indicated on the drawings, or sized for the metered line. Potential transformers, self-contained and fused. Ratios field settable with dip switches. Preset settings retained through power failure.

4. Pulse initiation on watthour pulse as programmed by the user at certain KWH rates.

5. Synchronous pulse contact for the demand window to provide for synchronizing time with the utility.

6. Self-protected from fault.

7. Updated data every 1.5 seconds.

8. Control power derived from the metered line.

9. Membrane type display screen with 6 digit display.

10. Capability of programming the protective relaying functions active or inactive.

2.8 PANELBOARDS

A. General Features:

1. Code gauge galvanized or galvannealed sheet steel cabinets, with corners lapped and welded or riveted, dead front, dead rear, front accessible.

2. Flush mounted in areas exposed to public view. Surface mounted in electrical, communication, mechanical and storage rooms.

3. Trim, portions of cabinet exposed to view and surface mounted cabinets to be factory phosphatized, primed and finished medium gray to match switchboards. In painted walls where exposed to public view (e.g., corridors, offices), field paint trim to match wall as directed by Architect.

4. Full height unreduced copper bus, rigidly supported. Solderless, saddle type, copper lugs for connection per paragraph titled "Connections and Terminations, Line Voltage Conductors". Bus feeder sequence as for switchboards. Solid neutral bar for grounded systems. Lugs sized for feeders rated for 75°C wiring. Subbreakers, split bus, main lugs, main breaker, double lugs, voltage and current ratings, all as indicated on the drawings.

5. Minimum bus rating of 225A, except where 100A is specifically indicated, but not less than feeder protective device rating.

6. Main breakers, common trip, single handle, mounted vertically ahead of panel bus. Replacing of branch devices with main breaker is not acceptable, except for panels in motor control centers.

7. Copper equipment ground bus for termination of feeder and branch circuit grounding conductors.

8. Oversize gutters for feed through, where indicated or required, sized not less than five times the total cross-sectional area of the through feed cable and connectors in addition to required branch circuit gutter. Where double lugs are indicated ahead of main breakers, provide oversized can sufficient for connections.

9. Incorporate associated contractors, relays, etc., in separate control section of the panel behind separate door, either with common frame, or adjacent to breaker panel where space is available. Where push button or contactor bypass is required, mount on dead plate behind panel door so that no live parts are exposed.

10. Hinged lockable door covering all devices. Flush catch and cylinder lock. Vault handle on doors over 4' high. All panels and cabinets keyed alike. Provide two keys per panel and cabinet. Keys to match existing panelboards where adding to existing facility.

11. Raintight enclosures in damp locations.

12. Certify conformance with the specifications.

B. Lighting and Appliance Panelboards Additional Features:

1. Minimum size 20" wide by 5-3/4" deep, unless specifically indicated otherwise.

2. Index cardholder on inside of door with typewritten circuit schedules reflecting as-built circuiting, behind clear plastic cover on inside of door, metal sided.

3. Automatic circuit breakers, 1" wide nominal, molded case, trip free, quick-make, quick-break, thermal magnetic type, bolted to the bus, with handles clearly indicating size and tripped position, of size and arrangement as shown on schedules. Common internal trip for multi-pole breakers. Permanent factory installed metal circuit numbers on adjacent trim (including spaces), screwed or riveted to trim. Adhesively applied labels are not acceptable. Where indicated, or where used for switching, use UL listed SWD switching duty breakers.

4. Minimum panel interrupting rating of 10,000A below 150V to ground including main and subfeed breakers. 14,000A above 150V to ground, RMS symmetrical. Where panels are subject to higher short circuit current on the basis of series rated systems, provide nameplate describing the series rating characteristics, and submit substantiation.

5. Breaker handle padlocking devices for 277V circuit breakers serving electric discharge lamps, built integral with panel.

6. Circuit breakers with integral ground fault detectors serving circuits on the exterior or in wet locations, where indicated. Provide 1 or 2 pole units with ground trip setting at 30 mA.

7. Breaker lockout/lock on devices as specified under paragraph titled "Spares".

8. Isolate equipment ground bus where indicated to serve isolated ground receptacles.

C. Power Panelboards Additional Features:

1. All requirements of lighting panelboards, including doors.

2. Convertible type construction.

3. RMS symmetrical rating equal to interrupting capacity of smallest device but not less than 22,000A (240V) and 25,000A (480V).

4. Breaker ratings per paragraph titled "Circuit Breakers, Molded Case".

5. Device handle padlocking provision.

6. Minimum bus rating of 225A.

7. Minimum side wiring gutter width for branch wiring of 5" where largest device is 225A and 8" for larger devices.

8. Where number of devices requires use of more than one section, provide totally enclosed sections, each with full capacity bus, and double lugs for full capacity feeder connection between sections.

9. Equipped spaces as shown, but not less than one per board.

2.9 MAGNETIC MOTOR STARTERS (UNLESS OTHERWIDE INDICATED)

A. Full voltage, across-the-line, nonreversing, horsepower rated, size No. 1 minimum with three thermal bimetallic type overload relays, ambient compensated where starters are remote from motors, and with under voltage release. Overloads sized for actual motor nameplate data per manufacturer's recommendations. Provide list of motor nameplate data and associated overloads. Coil 120V rated and fused.

B. Arc extinguishing characteristics and silver to silver renewable contacts. Auxiliary contacts as required by wiring diagrams but not less than two normally open, field convertible. If not field convertible, provide additional normally closed contact.

C. Wiring points brought out to numbered terminals. Interlocked requirements, remote control, status indicated, per control sequence and/or wiring diagrams on mechanical and electrical drawings.

D. For 480V separately mounted starters or where control circuit is shown as energized from motor circuit conductors, provide individual control transformer with 480V primary and 120V secondary and with (2) primary and (1) secondary fuses, adequate for controls energized from transformer, but not less than:

Starter Size	Minimum Addition to Standard Transformer
1	+ 50 VA
2	+ 50 VA
3	+100 VA
4	+ 100 VA

E. Mount NEMA Type 13, dust tight and oiltight devices on starter face including manual reset button, red RUNNING push-to-test, transformer type pilot light, hand-off-automatic switch for automatically controlled motors and additional devices where indicated or scheduled. Two speed motor starters to have HIGH, LOW pilot lights.

F. Separately mounted combination starters to have magnetic motor starter and switch or circuit breaker (as indicated) in common enclosure behind door with bypassable door interlock, features as specified for components.

G. Magnetic starters for remote control of 120V motors to be mounted adjacent to panelboard from which they are supplied, or where indicated.

H. Enclosures to be NEMA type 12 dust tight for separately mounted units, NEMA Type 3R for weatherproof units.

2.10 MANUAL MOTOR STARTERS

A. Voltage as required, horsepower rated, padlockable, toggle operated, with pole and bimetallic overload heater for each ungrounded leg, ON, OFF and TRIPPED indication, integral RUNNING pilot light, flush mounted where practical.

B. Where located in motor control centers or panels, group in control section on dead plate assembly, with barriers between voltages.

C. Where used for motor disconnect switch, omit overloads and pilot light.

2.11 CONTACTORS AND RELAYS

A. For Magnetically Held Contactors: Resistive load and horsepower rated motor starters, less overload elements, applied per manufacturer's recommendations.

B. For Air Conditioning Systems or Motor Control: 600V, AC, 10A, heavy duty, industrial type relays, magnetically held contacts as indicated with minimum of one normally open and one normally closed contact, field convertible, "T" rated for tungsten lamps, continuous duty coils, visible contacts or indicator. Designation

C. For Line Switching of 120V Motors Automatically Controlled: Magnetic motor starters with integral hand-off-automatic switch and pilot light.

D. Where required by number of poles indicated, use multiple relays in parallel.

E. NEMA Type 12 enclosure for individually mounted units.

2.12 PHOTOELECTRIC CONTROL

A. Encapsulated, quick-response, cadmium sulfide photocell; supply voltage 105V-285V; turn-on at 2± 20% FC; turn-off 2.5 to 3.5 times turn-on level; heat sink; surge protected; fail-safe design; rated 1,800 VA HID and 1,000 W tungsten; mount to IEEE-NEMA locking receptacle in cast aluminum housing.

B. Use with double throw electrically held relays for operation of mechanically-held relays and contactors. Locate relay module in NEMA 3R enclosure on roof in conjunction with photocell, or adjacent to associated time switch.

2.13 SMOKE DETECTOR (ELEVATOR AND HVAC INTERFACE)

A. Provide detectors where not provided under Fire Alarm Section;.

B. Approved by code enforcing authority for indicated use.

C. Photo electric type, solid sate micro processor LED visual alarm.

D. Self-contained, 120V, unit to provide signal to elevator control panel, motorized dampers, or HVAC control panels.

E. Auxiliary contacts, remote alarm, where indicated.

F. For duct detectors, provide a minimum or two auxiliary contacts, uniform detection sensitivity for air velocities between 300' to 3500' per minute, sample tubes, plug-in detector, and remote led indicator.

2.14 CIRCUIT BREAKERS

A. Provide ratings as indicated on the drawings and as specified herein. Do not utilize breakers scheduled to be phased out of production. Certify that breakers provided will have replacements available for a period of ten years.

B. Circuit Breakers, Molded Case:

1. Trip free, quick-make, quick-break, inverse time delay and instantaneous trip elements, handles clearly indicating rating and ON, OFF, or TRIPPED position, type and rating indicated and specified. Multi-pole breakers to be common trip with single molded handle. For nonautomatic units, omit trip.

2. Individually mounted breakers in NEMA Type 12 enclosures generally, and NEMA Type 3R for weatherproof units. NEMA Type 1 where flush mounting is indicated.

3. Padlocking provisions for breakers individually mounted and in switchboards, motor control center, and power panelboards.

4. All breakers to be labeled for 75°C wire including enclosure.

5. Interchangeable plugs designed to prevent tampering.

6. Breakers ahead of transformers to meet transformer manufacturer's recommendations regarding inrush current.

7. For switchboards, power panelboards, motor control centers (except as scheduled for small motors), provide single handle three pole units, unless otherwise indicated, UL labeled interrupting rating not less than the rating specified for the equipment, or the following, whichever is higher.

Breaker Trip Rating	**Minimum Frame**	**Minimum RMS Symmetrical**
15A to 60A	100A Molded Case	65,000A @ 240V 25,000A @ 480V
70A to 200A	225A Molded Case with Adjustable Magnetic Trip	65,000A @ 240V 25,000A @ 480V
225A to 500A	600A Electronic Trip Molded Case	65,000A @ 240V 35,000A @ 480V
600A to 700A	800A Electronic Trip Molded Case	65,000A @ 240V 50,000A @ 480V

800A to 1000A	1200A Electronic Trip Molded Case	65,000A @ 240V 50,000A @ 480 V
1200A to 2000A	2000A Electronic Trip Insulated Case 100% Rated.	85,000A @ 240V 65,000A @ 480V

C. Electronic Trip Breakers:

1. Microprocessor based, 9 function, true RMS sensing design with sensing accuracy through the thirteenth harmonic.

2. Continuous rating determined by interchangeable (field replaceable) rating plug, sensor, and long-time pick-up switch. Anti-tampering rating plug seal.

3. Visual trip indication for ground fault.

4. Externally accessible test port.

5. Adjustable long time pick-up.

6. Adjustable short time delay simultaneously adjusting magnetic pick-up and time delay or adjustable short time pick-up with I^2T ramp.

7. Ground fault (where indicated or specified) with adjustable pick-up and delay and switchable I^2 T ramp.

8. Test probe receptacles to permit testing without exposing live parts. Provide one portable test kit in container suitable for storage, and obtain receipt. Submit shop drawing.

D. Remote Trip (Where Indicated): Include shunt trip with auxiliary contact to disconnect shunt coil from circuit with breaker in tripped position.

E. Settings: Coordinate settings of main circuit breakers with serving utility company equipment in accordance with the coordination study.

F. Current Limiting Breakers:

1. Provide current limiting breakers where indicated or required by indicated fault current.

2. In ratings as available, provide current limiting breakers meeting the specifications without the aid of fuses.

3. In larger sizes, provide breakers combining time delay thermal trip, instantaneous magnetic trip circuit breaker and current limiting fuse protection in a single housing, coordinated so that breaker trips within rated limit and fuse provides fault protection and protects downstream breakers, and with fuses accessible through switchboard face. Blowing of fuse to trip breaker.

4. Provide spare fuses per paragraph titled "Spares".

5. Submit technical data and UL listing substantiating that current limiting device protects downstream devices.

G. Circuit Breaker Terminals: Provide copper wiring terminals, saddle lug where available, per paragraph titled "Connections and Terminations, Line Voltage Conductors".

2.15 DISCONNECT SWITCHES

A. Heavy duty (HD) horsepower rated, quick-make, quick-break, safety type, externally operated, rating and number of poles required, capable of switching 10 times switch rating. Fused for branch circuit protection, and in elevator machine rooms, with UL rejection type clips. Nonfused for motor disconnect where indicated. Switch and enclosure to be labeled for 75° wire for fuse ratings 125A and larger.

B. Include bypassable interlock, padlock provisions, positive ON and OFF indications, molded case breaker mechanism or visible blades, single switch mechanism to preclude mechanical single phasing, solid neutral bar for four wire feeders, copper terminals, spring loaded clips with noncurrent carrying springs. Provide wiring terminals as specified under paragraph titled "Connectors and Terminations, Low voltage Conductors".

C. For switchboard mounting, provide screw-on bus connections. For motor control centers, combine in compartment with controller as described in motor control center specifications.

D. Enclosures to be NEMA Type 12 in interior dry locations, NEMA Type 3R on exterior and in wet locations.

E. Use manual motor starting switches for manual control and/or disconnecting of 120V fractional motors and for disconnecting of 3 phase motors up to 5HP at 230V and 10HP at 480V. Flush mounted in finished areas. NEMA 1 enclosure on interior, NEMA 3R on exterior.

F. For flush mounted disconnects, provide manual motor starting switches, or where indicated, nonautomatic circuit breakers with flanged trim.

G. For disconnects between variable speed starters and the motor served, for elevator disconnects, and where indicated, provide auxiliary contact to disconnect starter coil in OFF position. Auxiliary contact to open before disconnect.

2.16 FUSES, LOW VOLTAGE

A. NEC dimension, rejection type.

B. 600A and Smaller: Class RK1, low peak dual element with separate overload and short circuit elements.

C. Coordinate fuses with each other, and with circuit breakers which they are protecting.

D. Provide label inside each switch cover indicating specific type of fuse required for replacement.

E. Provide spare fuses per Paragraph titled "Spares".

2.17 TRANSFORMERS, DRY TYPE

A. UL listed, dry type, ratings as indicated, built per IEEE, ANSI, and NEMA Standards, utilizing Group III insulation, rated at 220°C (180°C for encapsulated type). Normal life expectancy and winding temperature rise not exceeding 150°C in a maximum ambient of 40°C, and an average ambient of 30°C, with continuous rated nameplate load connected to the secondary side, at rated voltage. ANSI 61 factory finish. TP-1 rated.

B. Minimum impedance of 4.25% for ratings over 100 KVA, indicated on nameplate.

C. Delta primary and wye secondary connections for three phase units.

D. Vibration dampness between core and case. Exterior lifting holes.

E. Two 2½ percent taps each, minimum, above and below normal for ratings above 5 KVA.

F. Terminals below, bottom and side conductor entrance. Temperature rise in terminal compartment suitable for 60°C or higher insulated conductors. Case temperature rise 35°C maximum at rated load.

G. Rodent proof bottom enclosures. Ventilating openings arranged to prevent contact with live parts. Weather shield on all ventilated units, for drip protection.

H. Use wall mounted epoxy encapsulated units, sealed against moisture, dust, and fumes, for 15 KVA and smaller units, and where indicated.

I. Braced per latest ANSI "Short Circuit Characteristics" specifications.

J. BIL Ratings: 600V class and below - 10KV.

K. Sound level to be 3 db below NEMA standards.

L. Provide anti-turn solderless, copper saddle type incoming and outgoing feeder terminals per paragraph titled "Connections and Terminations, Line Voltage Conductors".

M. Tests: Factory tests based on NEMA and ANSI reference temperatures. Submit certified test reports for duplicate units of each rating with shop drawings.

1. Applied voltage test to other winding and ground (600V class) of 4 KV primary and secondary for 30 KVA and larger, 4 KV primary, 2.5 KV secondary for 25 KVA and smaller.

2. Induced voltage at twice rated voltage.

3. Ratio and polarity.

4. Efficiency, impedances, losses.

5. Temperature rise.

6. Short circuit (latest ANSI Short Circuit Test Code).

2.18 WIRING

A. General:

1. Specification grade.

2. General Use: Ivory color (as available) unless otherwise noted or specified.

3. Emergency Standby: Red color (refer to Paragraph titled "Identification and Warning Signs").

4. Screw type terminals on all devices, suitable for up to No. 10 solid copper conductors.

5. Where not specified herein, provide configuration as indicated on drawings.

B. Toggle Switches:

1. Flush tumbler, AC type, insulated base, completely enclosed.

2. 20A, tungsten load rated, at 277V.

3. 1 pole, 2 pole, 3-wayor key operated as indicated on drawings. Symbols: S, S_2 S_3, S_3,, S_k. 2 pole unit usable for (2) 120V circuits or (1) 208V Circuit.

4. Thermal overload switch, rated 1 HP at 120V. Refer to paragraph titled "Manual Motor Starters". Symbol: S_m.

5. Momentary type, three position, single pole, double throw, two circuit, spring return to center OFF position. Symbol: S_R.

C. Pilot Lights (Lighting Control): Flush neon type with lucite jewel suitable for use in switch plate opening, ganged on plate with associated switch, 120V or 277V as required, red jewel on emergency systems, green jewel on normal systems, lighted in the ON position unless otherwise noted. Symbol: S_P.

D. Receptacles:

1. General: Number of poles and ampere rating as shown on drawings and of NEMA standard configurations. Ground pole connected to circuit grounding conductor.

2. Duplex Convenience Receptacles: 15A, 125V; grounding third pole; side wired for 2 wire circuit use. Where 2 circuits are indicated, provide individual circuit for each half. NEMA 5-15R. 20A, NEMA 5-20R for dedicated circuit outlets.

3. Clock Receptacles for Surface Clocks (Non Central Systems): Flush type with recessed grounding receptacle and clock support hanger with removable stainless steel plate, NEMA 5-15R. For recessed clocks, install back box furnished by clock supplier.

4. Duplex Receptacles in Floor Boxes: Standard device behind special plate described under floor boxes. NEMA 5-15R.

5. Duplex Receptacles on Floor Boxes: Standard device in horizontal cast aluminum floor fitting, with blank plate and weatherproof flex connection to furniture, 18" length minimum.

6. Ground Fault Interrupting (GFI) Receptacles: NEMA 5-15R duplex receptacle with integral ground fault protection and lift cover.

7. Isolated Ground (IG) Receptacles: NEMA 5-15R duplex isolated ground receptacle with surge suppression line to ground, line to neutral and neutral to ground, light and alarm.

8. Weatherproof Receptacles, Flush Mounting: NEMA 5-15R duplex GFI outlet in single gang extension with gasketed cast aluminum lift cover.

9. Weatherproof Receptacles, Freestanding: NEMA 5-15R duplex GFI outlet mounted in cast box, stub mounted, with gasketed cast aluminum lift cover. Provide plugged hubs in box sides for extension.

10. Special Receptacles: Letter designation appears adjacent to special receptacle symbol. Simplex unless otherwise noted. Refer to schedule on drawings.

E. Motor Control (For Magnetic Starters and Individual Mounting):

1. Push Buttons, Selector Switches. Oiltight for starter and contactor control, 10A tungsten lamp rated, miniature type.

2. Pilot Lights: Oiltight, push-to-test, miniature, transformer type.

F. Wall Plates:

1. Device plates of one make and design for all outlets, smooth, satin finish, Type 302, stainless steel, beveled edges, to fit device.

2. Galvanized pressed steel plates, to conform with box and device.

3. For Exterior Locations: Cast aluminum lift cover rain tight while in use unless otherwise indicated.

4. Voice/data system plates by system supplier unless otherwise noted.

5. Engrave plates as described under other paragraphs.

G. Telephone and Signal Systems:

1. Telephone, Data, and Signal Outlet on wall Box: Single gang box with blank cover plate UON.

2. Telephone, Data, and signal outlet in Floor Box: Two gang box with blank cover plate UON.

2.19 LOW VOLTAGE SIGNALS (WHERE NOT OTHERWISE NOTED)

A. Control Transformer: 40 VA minimum, at 16V and 24V, integral self-restoring circuit breaker, 120V primary, install in flush mounted outlet box unless otherwise noted.

B. Push Button: Quick-make and break, momentary, flush outlet box mounting, with integral plate.

C. Foot Operated Alarm: Foot rail with SPDT switch, key operated reset switch, alarm indicator, toe operated. Cord connect to junction box. Locate as directed.

2.20 LIGHTING FIXTURES, GENERAL

A. Provide complete lighting system, wired, assembled and operable, including lighting equipment and accessories as shown on the drawings, described in the fixture schedules, specified herein and covered by allowance. Accessories include canopies, suspension of proper lengths, hickeys, castings, sockets, holders, reflectors, ballasts, diffusing material, louvers, plaster and mounting frames, lamps, recessing boxes, supporting brackets and channels, where required to span structural members.

B. Fixtures to be factory prewired and preassembled. Catalog numbers are given for manufacturers' identification. Conform to written descriptive requirements governing material and fabrication, either in the general or specific sections. Where catalog numbers are indicated as modified, no modification will be required if the standard unit fully conforms to all descriptive requirements in the specifications and conforms with specified ceiling construction. Fixtures to be UL labeled for location and operating conditions indicated.

C. Fixtures of the same type to be of one manufacturer and of identical finish and appearance. Where not identified on drawings, provide same type as indicated in similar locations.

D. For recessed fixtures, provide frame and trim compatible with ceiling type and construction. Refer to ceiling specifications and architectural drawings to determine types. For fixtures recessed in concrete, provide galvanized steel housing with bitumastic finish approved for the purpose.

E. Provide adequate lamp shielding, proper ventilation and heat dissipation.

F. Secure diffusers to trim by devices not requiring tools for removal, or for relamping. Provide safety chain attachment to fixture housing for portions of fixtures which are removed for servicing relamping.

G. Provide shop drawings for custom and modified standard fixtures, and catalog cuts illustrating conformance with specifications for standard fixtures. Drawings to indicate materials, assembly, and finish. Coordinate fixture type with ceiling supplier and submit fixture compatible with ceiling system.

1. Include dimensions of the assembled fixture, weight, ballast characteristics, description of lens or diffuser material and finish, socket specifications, frame, housing, reflector, special accessories, recommended lamps and list of agencies which have labeled the fixture. Indicate the number and type of wires for which fixture with attached junction box has been approved. Indicate conformance with temperature rating requirements of specifications.

2. Provide (for types in quantity of 30 or more) photometric report from an recognized testing laboratory equal to the standard report furnished by E.T.L., including candlepower distribution curves and tables, luminaire brightness readings, tabulation of coefficients of utilization and percent efficiency, and a description of the unit and test conditions.

H. Before ordering the specified lighting fixtures (for quantities of 30 or more), make available to the Owner's representative, on request, samples for his final approval. These samples may be on display at local distributor or manufacturer's showroom. The Owner reserves the right to change the fixture selection at no additional cost to himself except for actual fixture cost difference. Provide credit if fixture cost is less.

I. General Constructions:

1. Sheet Metal: Free of tool marks and dents. Painted after punching and forming to eliminate exposed unpainted edges. Intersections and joints formed true, sufficiently rigid to prevent distortion after assembly.

2. Castings: Free of blemishes, scale and rust, and finished smooth.

3. Aluminum Surfaces, Nonreflecting: Anodized clear or with color as indicated. Castings to be irradiated, sandblasted or anodized.

4. Aluminum Reflectors: Treat with alzak process to provide permanent reflective surface of 85% minimum. Extruded reflectors to be unscored, bright dipped and clear anodized.

J. Lighting Fixture Description: Refer to schedule on drawings or in specifications and to General Requirements in other paragraphs herein for full fixture description.

K. Provide only UL listed lighting fixtures. This applies to custom fixtures, as well as manufacturers' standard fixtures that are modified.

L. All exterior lighting fixtures to be UL listed for damp or wet locations, whichever applies. Damp locations are defined as exterior protected locations. Wet locations, completely exposed to the weather.

M. Submit a production sample of all custom and modified lighting fixtures to the Architect for review.

2.21 FLUORESCENT FIXTURE BALLASTS

A. General:

1. Provide ballast of proper type and voltage for each lighting fixture as scheduled on the drawings or in other paragraphs of the specifications, and meeting requirements herein.

2. Provide electronic ballasts throughout. Electromagnetic (core and coil) type, may be used only where electronic type are not available or not applicable.

3. Codes and Standards (Minimum):

a. American National Standards Institute (ANSI).

b. California Electrical Code.

c. California Energy Commission (CEC).

d. Certified Ballast manufacturers (CBM).

e. Electrical testing Laboratories (ETL).

f. Energy Policy and Conservation Act (EPCA), National Energy Conservation Amendments (NAECA).

g. Federal Communications Commission (FCC) regulations Part 18 and National Electrical manufacturers Association (NEMA) limits for Electromagnetic Interference (EMI and Radio Frequency Interference (RFI).

h. Underwriters laboratories, Inc. (UL) labeling and/or listing.

4. Sound rating of "A".

5. UL Class P rated, without any components containing PCB.

6. Fuse on each ballast serving 36" or 48" lamps, rated per manufacturer's recommendation.

7. Rated 50°F minimum for fixtures on interior. Rate 0°F minimum for fixtures on exterior, in parking garages and in refrigerated spaces.

8. HPF throughout including for compact lamps.

9. Equip each fixture with (1) or (2) electronic ballasts as required. For continuous row single lamp fixtures, use common ballast for adjacent fixtures as practical. Three and four lamp ballasts are not acceptable unless specifically indicated.

10. Where indicated or specified, provide radio frequency suppressor for each fixture. Where ballasts in fixture are supplied from separate conductors, provide separate suppressor for each ballast.

11. Ballast to provide normal rated life for specified lamp.

12. Start lamps in Rapid Start mode.

13. Where ballasts are located remote from fixture, install in lockable, sheet steel, ventilated enclosure, keyed alike with branch circuit panelboards. Space ballasts not closer than manufacturer's recommendation. Verify maximum allowable distance of ballasts from fixtures.

14. Physically interchangeable with electromagnetic ballasts in new or existing fixtures.

15. Operate lamps at frequencies between 25 and 40 KHz from 60 Hz input source with less than 10% flicker, at ambient temperature of 50°F to 105°F with 60°C maximum case temperature during operation.

16. Maximum light regulation ± 5% with ± 10% input voltage variation.

17. Suitable for operation of F17T8, F25T8 and F32T8, one two or three lamps, types as indicated or specified, design for optimum operation of the specified lamps.

18. Solid-state consisting of rectifier, high frequency inverter, power control and regulation circuitry, in steel case, marked with manufacturer's name, part number, supply voltage, sound rating, power factor, open circuit voltage, RMS current draw, input watts, starting current, crest factor, efficiency and UL listing.

19. Ballast life to be unaffected by lamp failure.

20. Minimum ballast factor of 95%.

21. Maximum current crest factor of 1.7.

22. Maximum total harmonic distortion of 10%.

23. Minimum power factor of 90%.

24. Withstand line transients per IEEE 587, Category A.

25. Rated life of 30,000 hours based on 10 hours per day.

26. Submit with shop drawings a certified test report from an independent test laboratory illustrating conformance with specified requirements.

27. Submit evidence with shop drawings from ballast supplier of three projects of significant magnitude, employing the proposed ballasts, in satisfactory operation for a minimum of one year. Identify projects, operating personnel familiar with the ballast performance, and frequency of ballast failure.

28. Provide extended guarantee as described under Section 16000, Guarantee and Warranties.

B. Electromagnetic Ballasts, Additional Requirements:

1. Minimum power factor of 95%.

2. Usable with normal or energy saving lamps.

3. Maximum Input Watts with Full Light Output:

   a. Two lamp 32W T8 lamps, 277V = 71 ± 5%.

2.22 EMERGENCY POWER BATTERY PACK

A. Provide where called for in the lighting fixture descriptions.

B. Consisting of a high temperature nickel cadmium battery, battery, battery charger, all solid state circuitry, in one enclosure.

C. Include charging indicator light and test switch.

D. Capable of operating with one or two lamp electronic ballasts to illuminate one T8 lamp for a minimum of 90 minutes, producing 900 to 1100 lumens of initial emergency lighting.

E. UL listed.

F. Five year warranty.

2.23 EMERGENCY POWER SUPPLY SYSTEM

A. Provide where indicated on drawings emergency power supply for emergency egress lighting, (UL 924). KVA capacity as indicated on drawings

B. System shall have the following features:

1. Input: 277/480 volt or 277 volt as indicated; ±10% voltage; 60 Hz

2. Output: 277/480 volt or 277 volt as indicated; 60 Hz ± 0.5Hz; ± 4% voltage regulation; 10% maximum THD; 20 ampere circuit breakers as required.

3. Continuous power supply suitable for HID type lighting fixtures.

4. 90% efficiency

5. Seal lead acid battery. (Minimum 90 minute power supply at full output)

6. 24 hour recharge time with continuous float charge.

C. Manufactures: Meyers;; Dual/Lite – Spectron ILS; Lithonia – Power systems FT

2.24 FLUORESCENT FIXTURE

A. Temperature Rating:

1. Design fixtures to limit ballast case temperature installed in fixtures to applicable UL Standards.

2. Conform with Guarantee Requirements.

B. Fixture Construction:

1. Lampholders: Bipin type. Permitting full entry of lamp pins in a vertical plane, after which entry, a 90° rotation shall properly seat the lamp. Corrosion-resistant "edge-wipe" type lamp pin contacts.

2. Lampholders, Electronic Ballasts: Suitable for frequencies employed, meeting recommendation of the ballast manufacturer.

3. Lampholder Fastening: Securely fastened to brackets or socket straps in manner to eliminate flexing under normal lamp pressure. Replaceable without removing fixture from the installation. Backed by fixture housing or end plate to prevent twisting.

4. Ballast: Fasten directly to metal fixture housing at three points, using captive bolts or screws, or equivalent method.

5. Housings and Bodies Recessed Troffers: Fabricated of die-formed, cold-rolled steel not less than 20 U.S. gauge welded into a one-piece assembly using lap seam construction. Breaks, bends, edges, holes and knockouts accomplished by die-forming and machine operation. Alternately, fabricated of extruded aluminum sections or die-formed from aluminum sheet of not less than No. 16 B and S gauge aluminum, with sections positively interlocked to provide a rigid unit. A complete die-formed housing of 22U. S. gauge steel will be acceptable providing the unit is ribbed, embossed or paneled with a minimum of four cross ribs so as to be equivalent in strength to the above specified.

   a. Provide wiring and ballast compartment accessible when the fixture is in the installed position. Wiring secured by clips or clamps to the body of the fixture, with the cover removed.

   b. For troffers in suspended ceilings, in addition to seismic suspension, provide four clips attached to fixtures to positively tie fixture to T-bar or ceiling channel suspension. In plaster and dry wall ceilings, provide all necessary framing, support and hardware.

6. Finish: Finish visible fixture trim in color designated on drawings, or baked white enamel where not otherwise noted. Rustproof metal parts. Provide enamel where not otherwise noted. Rustproof metal parts. Provide enamel finish, baked-on at a minimum temperature of 300°F. Enamel reflective surface to have 87 percent reflectivity, minimum.

7. Diffusers and Lenses: Provide types indicated on fixture schedules and as specified herein.

8. Lenses: Flat lens designed to direct light down and present low surface brightness within normal viewing angles; high molecular weight virgin acrylic plastic; smooth on one side, uniform pattern of male cones or hexagonal prisms on the other, 3/16" outside dimensions. Special types where noted on fixture schedule.

9. Translucent Diffusers (Where not Otherwise Indicated): Flat cast (not extruded), translucent white, virgin acrylic with matte finish; 1/8" thick up to 2' width; 3/16" thick for 3' and 4' width; crown of sufficient height to prevent sag below horizontal. Fixture depth to accommodate diffuser crown without objectionable lamp image.

10. Doors: For troffers, unless otherwise specified, provide separable, hinged door constructed of extruded aluminum, with mitered corners, secured in place by inconspicuous spring loaded, visible, finger operated catches, removable without tools, but hinged to preclude accidental dislodgment in the open position. Incorporate light trap between door and fixture. Retain lens firmly in door with clips or equivalent, but allowing for lens replacement without special tools.

11. Fixture Wiring: Wire with 600V, 105°C rated, thermoplastic insulation. Interconnect between sockets and ballasts, and provide 12" minimum length pigtails. Provide two wire pigtail for single circuit connection, four wire for two circuit connection where two neutrals are shown on drawings. Where fixture is served from two sources, barrier wiring from emergency source as required and provide notation inside fixture indicating "supplied from two sources".

12. Recessed Fixture Connection: Connect to fixture outlet, with 6' length maximum of flexible conduit with conductors insulated for rated fixture operating temperature.

13. Recessed Downlights: Provide mounting frame with high power factor ballast and an attached prewired junction box, rated for through wiring with 60°C conductors, designed for installation without installing trim, diffusers or lens. Verify suitability of attached junction boxes for number of conductors indicated on drawings, provide additional boxes where attached junction box capacity is exceeded.

14. Fixture Testing: Test production run unit for fluorescent troffers furnished in quantities in excess of 100 units in presence of Owner's representative. Place fixture face down on flat surface with lamps installed but without diffuser. Raise one corner until the second corner clears the surface, without dropping lamp or damaging lamp holder. Repeat test with diffuser in place. Door shall not come unlatched and no permanent set shall occur in fixture. Submit test report.

C. For fluorescent fixture specified to be chain hung, provide machine type steel chain, closed welded links, hot-dipped galvanized finish, 750 lb. rated tensile strength, weighing approximately 13 lbs/100 feet, capable of supporting fixture weights of 30 to 60 lbs.

2.25 HIGH INTENSITY DISCHARGE FIXTURES

A. Provide porcelain, screw type mogul sockets with nickel plated brass shells, silicone prelubricated, UL listed at 600V, 1500 watts, securely fastened to fixture body to prevent twisting or rocking of socket when lamping or relamping. For pendant units, provide balanced construction for use on swivel hanger.

B. For interior use, where not otherwise specified, provide integral constant wattage, "B" sound rated, fluorescent style ballasts, meeting requirements for fluorescent fixture ballasts, and including automatic resetting thermal protector and fuse. Use encased and potted type where fluorescent style is not available.

C. For exterior use, where not otherwise specified, provide integral constant wattage, weatherproof, minus 20°F rated, high power factor ballasts complete with automotive type fuses in plastic fuse holders, wired into primary circuit. Where specified, provide integral luminaire construction, utilizing core and coil units, to provide same performance.

D. Where fixtures are indicated to be connected to emergency circuits, provide a standby quartz iodine lamp for temporary illumination until HID lamp restrikes.

E. Conform with ballast guarantee requirements.

F. Provide ballast compatible with specified lamps and so certify.

2.26 CUSTOM LIGHTING FIXTURES

A. Subject to same construction and finishing requirements specified for standard fixtures.

B. Fixtures to bear UL label at time of delivery to the project site.

2.27 EXTERIOR, FLOODLIGHTING AND DECORATIVE STANDARDS ADDITIONAL REQUIREMENTS:

A. Complete installation including poles, anchor bolts, luminaries, lamps, ballasts, wiring as detailed and/or specified, mounted on reinforced concrete bases.

B. UL wet location label on fixtures on exterior or in wet locations.

C. Exterior pendant or pole mounted fixtures to withstand minimum lateral load of thirty pounds per square foot of exposed surface. Certify conformance on shop drawings.

D. Poles for exterior fixtures to be round tapered steel (unless otherwise detailed or specified), 11 gauge minimum, height as indicated, with welded steel baseplate, four galvanized anchor bolts, eight nuts and washers and hand hole with cover. Poles to be galvanized and field painted to match fixture. Painting to conform with PAINTING section of specification.

E. Stainless steel or nonferrous hardware throughout on exterior fixtures.

F. Grounding lugs on pole mounted fixtures.

G. Acrylic diffusers on exterior of high heat resistance type. When used with H.I.D. lamps include an ultraviolet absorber to limit yellowing index change to plus 0.5 after 4000 hours exposure to 400 watt lamp.

H. For poles exceeding 25 feet in height, provide structural calculations to enforcing authority and obtain approval.

2.28 LAMPS

A. General: Unless specified otherwise herein, furnish and install lamps for each fixture of type and wattage indicated on drawings or other section of the specification, compatible with specified ballast. For fixtures on exterior or in cold locations, use lamps suitable for 0°F start. Refer to paragraph titled "Spares". Lamps to be as follows where not otherwise specified.

B. Fluorescent Lamps (minimum Values):

1. General: Rapid start, suitable for operation with electronic ballasts UON, 3500K, RE 835.

2. T8 Lamps: 20,000 hour life; CRI 84; 17 watts, 1,375 lumens for 24" lamps; 25 watts, 2,200 lumens for 36" lamps; 32 watts, 2,950 lumens for 48" lamps.

3. Compact Lamps: Four pin (UON): CRI 82; 10,000 hour life; 9 watts, 600 lumens; 13 watts, 900 lumens; 18 watts, 1,200 lumens; 26 watts, 1,800 lumens; 32 watts, 2,400 Lumens; 42 watts, 3,200 lumens lengths per fixture requirements..

C. Incandescent Lamps: Inside frosted or as recommended by fixture manufacturer, 130V rated.

D. Metal Halide: Phosphor coated, unless otherwise noted, universal burning type, used with compatible ballasts in enclosed fixtures. Breaking of outer glass to disconnect supply to arc tube. CRI 70 minimum.

Watt	Base	Initial Lumens	Life Hours	Comment
100	E 17	7,900	10,000	Enclosed Fixture
175	BT 28	14,000	10,000	Enclosed Fixture
250	BT 28	20,500	10,000	Enclosed Fixture

2.29 OCCUPANCY SENSORS

A. Provide California Energy Commission approved, UL listed, passive infrared occupancy sensors in individual rooms, at locations, at locations indicated on drawings.

B. Passive infrared Wall Sensor:

1. Automatic on-off control of lighting loads in rooms as indicated. Rated for both incandescent and fluorescent lighting. Up to 600 VA at 120V and up to 1200 VA at 277V with zero minimum. Capable of switching electronic fluorescent ballasts.

2. Horizontal field of view; minimum 170° x 15 feet for hand motion.

3. Two position switch; automatic mode, and override of the automatic mode to turn lighting off even if room is occupied.

4. Delayed automatic "off" (time-out) adjustable from minimum of 1 minute to a maximum of 20 minutes. Movement in the room during the time-out period to reset the time delay.

5. An ambient light override that may be set so that when sufficient ambient light (daylight) is present, the lighting will not turn on. Adjustable from full daylight to less than 40 foot-candles.

6. Ivory (unless otherwise noted) injection molded thermoplastic device body for mounting on a single gang plaster ring, with stainless steel GFI style (rectangular opening) plate.

7. Two year manufacturer's warranty.

C. Ultrasonic Ceiling Sensor:

1. Automatic on-off control of lighting loads in rooms as indicated. Unit complete with low voltage power supply, relay for switching multiple circuits with local manual switches single or multiple sensors in opposite directions as indicated on drawings.

2. Each sensor to have a field of range minimum of 25' x 25' for hand motion. Multiple sensors to double the range. Transmitter and receivers angled 30° down form horizontal.

3. Sensor to have on-auto switch, adjustable time delay between 1-20 minutes, adjustable sensitivity and normally closed relay to leave lights on sensors failure.

4. Housing made of rugged high impact injected molded plastic colored white.

5. Two year manufacturer's warranty.

2.30 LOW VOLTAGE SWITCHING/LIGHTING CONTROL SYSTEM

A. General:

1. Provide a complete and operable programmable system for low voltage remote control including self contained microcomputer controller with built-in keyboard, display LCD, data link, power supply, output modules and relays adjacent to lighting panels, data lines between photocells, switches and other transceiver or remote relay panels, extension of branch circuits to relays, control source in each panel and to control relays in each cabinet and to lighting panel circuit breakers. It shall be fully programmable on relay by a relay basis.

2. The system shall include but not limited to:
   a. Low voltage momentary or maintained contact master or local override switches.
   b. Local mounted key-pads.
   c. Low voltage 20 Amp latching relays.
   d. Control transformers.
   e. Control programmable stand-alone panel processor.

f. Remote relay cabinets.

B. SUBMITTALS

1. Submit manufacture's data on lighting control system and components.

2. Drawings shall include but not be limited to riser diagram, individual panel drawings with load assignments, panel address, relay counts, switch input information, and data line connections. Internal lighting control programs include detailed software interlock schedules for switching devices and telephone override control, and initial automatic lighting control schedule program shall be submitted for review.

C. Lighting Relay Panel (LRP)

1. The LRP shall be a wall mounted, self contained microprocessor based intelligent control panel, housing computers, power supplies, relays and all other related equipment in an NEMA 1 enclosure.

2. The power supply to the LRP shall be 277 or 120 volts, single phase, with step down to 24 volts for the LRP.

3. Barriers of dead front covers shall be provided to segregate normal and emergency lighting circuit low voltage wiring.

4. All LRP components shall be readily replaceable with "off the shelf" replacements without shut-down of the complete system.

5. All LRP's shall have included the ability, both hardware and software, to up-grade the panels to a complete integrated lighting system controlled through a central processor that will program, modify, report relay status or errors, without any modifications to the existing LRPs'. The only materials that would be added are the remote interface computer with software and the data line between the processor and the LRPs. LRP's that can not be up-graded with out adding or replacing hardware in the panels will not be accepted.

6. All LRPs shall be supplied with a minimum of 32 programmable switch inputs, Each input shall support both momentary and maintained switch inputs mixed or matched in the same panel. Each switch input can operate one of all of the relays or any programmable group of relays.

7. A sixteen (16) character keypad and a thirty-two (32) character liquid crystal display (LCD) shall be provided on each LRP for local control, status check, and programming. It shall be possible to program all parameters as specified for the system through this local keypad and display. The programming and status functions available are to be as follows:

ASTRO time clock
day schedules
exception (holiday) schedules
relay assignment
override switch assignment
relay commands
set time and dates
display time and date
Errors during programming shall be annunciated by an audible tone.

8. All LRP's shall be able to transmit all local programming, status, and control data to a central controller via data line communication without modifying the panels. If the central processor up-grade is selected by the owner at some future date only the data line, central computer, and software need be added.

9. LRP enclosure shall be suitable for surface installation, with hinged door and lock.

10. Provide seventy-two (72) hour battery back-up for all vital memory functions.

11. Contractor is responsible to provide a complete working lighting control system including all conduits, wire, switches, LRP panels, relays, and programming.

D. Remote Control Switches

1. Remote control switches, single pole, two circuits, momentary contact for normal services. A 25 volt (mounted on the rocker arm) red L.E.D. for "on" condition.

2. System shall be capable of using any low voltage momentary or maintained dry contact switch. Switches can be mixed or matched between maintained and momentary in each panel.

3. Switches shall wired with 3 conductor #18 awg for each switch with a pilot light.

E. Manual Controls

1. Manual controls shall be on such basis that any switch shall be capable of controlling any relay or group of relays in any configuration without restriction. Provide a manual override keypad on each panel for programming, relay status, and scheduling.

F. Low voltage relays

1. Relays shall be plug-in type and shall be activated electronically by momentary pulse.

2. Relays to be rated for 20 Amp Tungsten filament, ballast, or resistive loads.

3. Relays shall be electrically operated and mechanically held latching single pole. Electrically held relays will not be accepted.

G. Ethernet

1. Provide Ethernet connection for remote computer over-ride.

H. Day Light Controls

1. Provide photo diode programmable sensors as indicated on the project drawings.

2. Sensors are mounted on the roof exterior areas as near as possible to the associated LRP via 4 conductor shielded cable.

3. Controller is mounted next to the associated LRP. Controller shall display the actual foot candle as indicated by the sensor. Calibration and setpoints for on/off controls based on foot candle levels shall be adjusted on the controller.

4. Controller shall have adjustable HID timers, cloud cover on-delay and off delay timers, H-O-A controls, pilot light indication, and full digital readouts.

5. Controller shall require 120/277 volt AC power form the associated LRP. Controllers shall be a complete U.L. Listed assembly.

I. Programming

1. Contractor is responsible to provide a factory trained and authorized field engineer to assist in the basic programming of the lighting controls. Base programming to include switch to relay assignment for overrides, schedules for M-F, week-end and holiday schedules.

2. Contractor to provide a second programming field trip to coordinate with the building owner/tenant all final programming adjustments that may be required.

J. Remote Relay Panel:

1. Self contained panel housing relays controlled by LRP. Number of relay as indicated, NEMA 1 enclosure.

2.31 AUTOMATIC TRANSFER SWITCH:

A. Size and voltage indicated on the drawings, listed per applicable UL standards as a recognized component for emergency systems, rated for all classes of loads including 100% tungsten lamp loads. Transfer switches serving fire pumps are to meet NFPA 20 and are to be provided under mechanical section of the specifications.

B. Electrically operated, mechanically-held device utilizing momentarily energized, positively locking, incorporating arc barriers for main contacts, with separate arcing contacts in ratings 400A and larger. Main and arcing contacts replaceable from front of switch without disconnecting power conductors. Bus and contacts of silver plated copper.

C. Solderless copper saddle type incoming and outgoing feeder terminals per paragraph titled "Connectors and Terminations, Line Voltage Conductors" in Section 16000, General Requirements and Materials.

D. Transfer in either direction within one-sixth of a second.

E. For four wire systems where neutrals pass through transfer switch provide 4 pole switches with fully rated, overlapping neutral transfer contacts.

F. Withstand and closing rating, based on tests conducted at rated voltage per UL standards, to equal or exceed the available short circuit, but not be less than the following:

Switch Rating	**Minimum Withstand Amperes (RMS Symmetrical)**
260A and Less	22,000
261A to 400A	35,000

G. Manual operating handle to stop contacts at any point in cycle.

H. Enclosure with hinged lockable door, wall mounted, NEMA 4 exterior, NEMA 12 drip proof on interior.

I. Service: Certify that the manufacturer maintains a factory warehouse located within 50 miles of the job site, at which spare parts are stocked, and where a factory trained, full time field service engineer primarily assigned to field service, is permanently stationed.

J. Operations and Accessories: Solid-state logic panel including:

1. Time delay on momentary dips in normal source (0-6.0 seconds), set at 1.0 second.

2. Time delay on transfer to emergency for controlled loading of generator (0-5 minutes), set at 0 minutes. Where multiple transfer switches are shown, set life safety switches at 0 minutes and other switches at 20 second intervals.

3. Time delay on retransfer to normal (0-30 minutes) set at 30 minutes. Override if emergency source fails and normal is available.

4. Close differential voltage sensing of all normal source phases (pick-up 85-100% of nominal and drop out 75-98% of pick-up), set at 85% drop out and 95% pick-up.

5. Voltage (85-100% pick-up) and frequency (90-100% pick-up) sensing of the emergency source to prevent premature transfer, set at 90% voltage and 95% frequency.

6. Test switch (momentary type).

7. 10A engine starting contacts (1-N.O.).

8. Pilot lights to indicate switch position (green on normal and red on emergency).

9. Auxiliary contacts as required for indicated operation (1-closed on normal and 2-closed on emergency, minimum) AC rated 10A, 480V.

10. Instrument type ammeter and selector switch conforming with paragraph titled "Metering" where shown on drawings.

11. Time delay and sensing functions to be readily field adjustable over indicated ranges and operate without drift over-4°F to 158°F. Logic panel to be complete with enclosure and interwiring.

K. Control wiring to interface with existing emergency generators set and other existing automatic transfer switches.

L. Requirements and Tests:

1. Temperature Rise: Measurements to be made after overload and endurance tests.

2. Withstand: UL listed to withstand the magnitude of fault current available at the switch terminals when coordinated with respective protective devices as shown on the plans at X/R ratio of 6.6 or less.

3. Dielectric: Tested after the withstand test at 1960V AC RMS minimum.

4. Voltage Surge: Control panel voltage surge withstand test per IEEE Standard 472-1974 and voltage impulse withstand test per ICS-1-109.

5. Certify, upon request, that the complete unit meets or exceeds the seismic requirements of the California Administrative Code Title 24 and Uniform Building Codes.

2.32 TENANT SERVICES

A. Where detailed or specified, provide tenant electrical and telephone service conduits and main service switches under this work including required metering switchboards, sleeves, openings, hangers and supports. Service wiring and fuses to be provided under tenant work.

B. Conduit runs, conduit sizes, and number and size of switches, have been designed and indicated, on a square foot basis, to establish the scope of the work. Actual work to be based on leasing drawings as made available.

C. Do not place final switchboard order for tenant metering switchboards or install tenant service conduits prior to written release from Owner. Notify Owner in writing thirty days before release is required in order to avoid delay in the work.

D. Prepare itemized schedule of tenant service data included in the work, listing number, length and size of service runs, number and size of switches listed by switchboards, number of switchboard sections, telephone service by length and size. Present list to Owner prior to finalizing of contract. Prepare similar list at time work is released based on final leasing information so that work scopes may be compared.

E. Submit list of unit prices for conduit runs, for switches of each rating installed in switchboard, and for additional switchboard sections without switches but ready for accepting switches.

F. Final cost differential, if any, to be determined on the basis of unit prices or negotiated lump sum, at Owner's option.

2.33 ACCEPTABLE MANUFACTUREERS, MATERIAL

A. Insulated Bushing: O.Z. Gedney types A, B and copper lug BLG, equivalent by Midwest Electric.

B. EMT Fittings - Steel Raintight: Appleton TW Series, Crouse-Hinds MW Series, Steel City TC710 Series, Thomas and Betts 5120 Series, Tomic 20 Series.

C. Liquidtight Flex: type U.A. with built-in bond wire, American Flex Conduit, Anaconda, O.Z. Gedney.

D. Gutters and Wireways: Circle AW, Hoffman Engineering Company, Square D.

E. Nonmetallic Conduit, Polyvinyl Chloride, Schedule 40, 90°C Rated: Can-Tex Industries, Carlon, Certain Teed, Kraloy Plastics.

F. Hubs: Myers, Appleton.

G. Conduit Seals: Crouse-Hinds Type EYS, equivalent by Appleton.

H. Expansion Joints: O.Z. Gedney Type "DX" or combination of fittings, equivalent by Appleton. See conduit installation specifications.

I. Wall Entrance Seals: Thunderline Link-Seal, O.Z. Gedney Type WSK.

J. Caulking Compound: Tremco - "Acoustic Sealant", Manville - "Duxseal", Interchemical - "Pressite 579.64", Chase Foam.

K. Penetrations, Fire Rated Wall or Partitions: UL rated assembly.

L. Flashing: Stoneman 1100 Series, equivalent by Archer.

M. Conduit Wrapping: Polyvinyl tape - 20 mil ½ lap by Manville, Minnesota Mining "Scotch" or 40 mil PVC coating by Occidental Coating Company, Robroy.

N. Steel Outlet Boxes: 4" square by 1½" deep minimum, Appleton, Bowers, Raco, Steel City.

O. Acoustical Outlet Box Pads: Harry A. Lowry Associates, Nelson Electric FSP.

P. Prefabricated Outlet Box Assemblies: G.B. Electric, Caddy.

Q. Cast Boxes and Conduit: Appleton, Crouse-Hinds, Pyle/National, O.Z. Gedney.

R. Floor Boxes: Hubbell "Dual Level" fully adjustable Type 1, round cover. Rectangular for ganged boxes. For flush duplex outlets S-3925 cover. Steel City 600 Series, Walker 880 Series. Afterset: Hubbell PT7 Series. Equal by Steel City, Walker.

S. Cast Iron Floor Junction Boxes: Appleton, Thomas and Betts, O.Z. Gedney.

T. Precast Concrete Pull Boxes, Transformer Pads:

1. Enclosure: Associated Concrete products, Brooks Products.

2. Waterproofing: Sonneborn Hydrocide. Equivalent by Dow Corning.

3. Hardware: Inwesco 10A Series Racks and Hooks, 11A31 Insulators, Equivalent by A.B. Chance.

U. Hand Hole: Brooks Products No. 3-RT, equivalent by Associated Concrete Products.

V. 600V Conductor Installation Accessories:

1. Steel Spring Connectors (No. 8 and Smaller): Scotchlok Types R and Y, Ideal Wirenut.

2. Solderless Connectors (No. 6 and Larger) Copper or Bronze Bolted Saddle Type: Burndy - "Versitaps", Thomas and Betts "Locktite", O.Z. Gedney solderless, Teledyne Penn-Union Vi-tite.

3. Power Distribution Blocks: Square D Series 9080, equivalent by Marathon Special Products.

4. Compression Connectors (Motor Connections No. 8 and Smaller): T&B Stakon, Burndy equivalent.

5. Tape: Scotch #23 rubber tape and #88 vinyl tape. Sola Basic, Sierra-Tomic.

6. Sealant: Scotchkote. No known equal.

7. Pulling Compound: Powdered Soapstone, Ideal Yellow 77, Wirelube, Minerallac #100, Sierra-Tomic.

8. Cable Supports: O.Z. Gedney split wedge, Kellems cable clamps.

W. Ground Connectors:

1. In-Slab Ground Connectors: O.Z. Gedney Type VG, equivalent by Burndy, Cadweld.

2. Conductor Joint: Exothermic - Cadweld, Thermoweld. Compression - Burndy Hyground.

3. Computer Floor Ground Connector: Thomas and Betts SRG Series, equivalent by Burndy.

4. Signal Reference Grid: Cadweld Electric Products Division, equivalent system by Burndy.

X. Vibration Isolators:

Type	Description	Manufacturer: California Dynamic Corporation, equal by Mason Ind., Amber/Booth, Sause (Vibrex)
PN	Neoprene Pad	VT
HMN	Neoprene Mount	RQ*
HN	Neoprene Hanger	RH*
MSL	Spring Mount	RJEQ*
HS	Suspension Hanger	CH30*
WMN	Neoprene Mount	RBA

Preapproved for California

Y. Seismic Bracing Systems: B-line, NUSIG or California approved equivalent.

Z. Afterset Anchors: Hilti Kwikbolt, Phillips "Redhead" wedge type.

2.34 ACCEPTABLE MANUFACTURERS EQUIPMENT (Subject to conformance with specification).

A. Switchboards:

1. 2500A and Smaller: General Electric Type AV2 line.
2. Equivalent by Siemens, Square D, Cutler-Hammer.

B. Power Panelboards: General Electric, Siemens, Square D, Cutler Hammer.

C. 480/277V and 208/120V Lighting and Outlet Panelboards: General Electric Type AE and AQ with TEY, TED4, TFJ and THQB, TQD branch breakers. Equivalent: Square D, Cutler Hammer.

D. Digital Metering: CH Type IQ Data Plus II, equivalent by General Electric, Square D.

E. Motor Starters: Allen Bradley, General Electric, Siemens, Square D, CH.

F. Contactors and Relays:

1. Mechanically held: 20A - ASCO Bulletin 917; 30A and larger - ASCO Bulletin 920.

2. Magnetically Held Contactors: Same as for motor starters.

3. Magnetically Held Relays: Industrial grade with normally open and normally closed contacts. Manufacturers same as for motor starters. Equivalent to Square D Class 8501, Type H, General Electric CR2810.

4. Time Delay Relays: Manufacturers same as for motor starters. Equivalent to General Electric CR2820B Series.

G. Photoelectric Cells: Fischer Pierce 6690 Series with S476-15 receptacle mounted on cast box. Equivalent by Paragon, Tork.

H. Photo Electric Smoke Detectors (Where not Part of Fire Alarm System): Electro Signal Lab Inc. 600 Series, self-contained 120V.

I. Circuit Breakers: Molded case.

1. For Lighting Panelboards: Same as panel manufacturer.

2. For Switchboards, Motor Control Centers, Power Panels, Bus Plugs: General Electric, Siemens, Square D, Cutler Hammer.

J. Disconnect Switches (Heavy Duty, Quick-Make, Quick-Break):

1. 800A and Smaller: General Electric, Siemens, Square D, Cutler Hammer. Rejection type for fused units.

2. Motor Switches: For 120V, 230V up to 5 HP, 460V up to 10HP. Square D Class 2510. Equivalent by General Electric, Cutler Hammer.

K. Fuses:

1. 600A and Smaller: Low peak, dual element Class RK1, Buss LPN-RK (250V) LPS-RK (600V). Equivalent by Gould Shawmut, Littlefuse.

L. Transformers (Dry Type):

1. Acme, General Electric, Square D, Cutler Hammer.
2. Shielded Transformers: GE Guard I. Equivalent by Square D, Cutler Hammer.

M. Wiring Devices:

1. Maintained Switches: Hubbell 1221-I Series, equivalent by Arrow Hart, Bryant, Pass/Seymour.

2. Momentary Switches: Hubbell 1557-I, Arrow hart 1995 Series.

3. Pilot Lights (Ganged with Switch): Neon type, Arrow Hart #1720, voltage and color as specified, equivalent by Pass/Seymour.

4. Duplex Outlets: Hubbell 5352-I, equivalent by Arrow Hart, Bryant, Leviton, Pass/Seymour.

5. Clock Receptacle with Stainless Steel Plate: Arrow Hart 452, General Electric 4224-5, Hubbell 5235.

6. Floor Box Mounted Outlets: Hubbell, Lew, Walker.

a. Duplex receptacle on floor box - Hubbell "Low Con" style, satin aluminum.

b. Power outlet on floor box - Hubbell "Low Con" style with furniture feed plate.

c. Low Tension: 2" diameter IPS cast aluminum standpipe, or kick ring, equivalent to Walker 810-2 with support.

7. Special Receptacles: NEMA configurations as specified and or shown on drawings, Arrow hart, Hubbell.

8. Ground Fault Interrupting Receptacles: Hubbell GF 5362-I, with WP26 lift cover. Equivalent by Arrow Hart.

9. Weatherproof Receptacle, Flush Mounting: Hubbell GF 5362-I with WP26 Lift Cover. Equivalent by Arrow Hart.

10. Weatherproof Receptacle, Freestanding: Hubbell GF 5362-I with WPF526 Lift Cover (FS box mounting). Equivalent by Arrow Hart.

11. Plates - Smooth Satin Finish, Type 302, 0.035" Stainless Steel: Arrow Hart, Hubbell, Leviton.

12. Low voltage control transformer, 30VA - Edwards No. 599. Equivalent by Acme, General Electric, Cutler Hammer.

13. Low voltage push button, momentary - Edwards No. 852. Equivalent by Eagle.

N. Lighting Fixtures:

1. Conform with all requirements described under "Lighting Fixtures, Lamps and Accessories" in addition to scheduled descriptions. Submit itemized conformance list with bid.

2. Lighting Fixture Schedule: Verify ceiling construction on Architectural drawings. Supply fixture types compatible with ceiling.

3. Lenses equal to KSH Pattern 19 3/16", where not otherwise noted.

4. Ballasts, Electronic: Advance, Magne Tek Triad, Motorola, Valmont.

5. Ballasts, Core and Coil: Advance, Universal, Valmont. Energy saving type equivalent to Universal SLH Series.

6. Emergency Power Battery Pack: Bodine, Siltron.

7. Lamps: General Electric, Osram, Phillips, Sylvania.

O. Occupancy Sensor: My-Tech, Watt-Stopper.

P. Low Voltage Switching: Leviton, or equal by LCD or Watt-Stopper.

Q. Transfer Switch: ASCO, Russelectric, Zenith.

PART 3- EXECUTION

3.1 SITE CONDITIONS

A. Examine the drawings of all trades and all specification sections, survey the existing conditions, and include all necessary allowances in bid proposal.

B. Resolve all conflicts with code requirements, site conditions and the work of other trades.

C. Verify the locations of all existing utilities prior to construction and protect them from damage.

D. Pay all costs incurred due to damage of existing utilities or other facilities.

3.2 LOCATIONS

A. Drawings are essentially diagrammatic, and although the size and locations of equipment are generally shown to scale, make use of data in all Contract Documents, and informational documents, and verify this information against field conditions.

B. Drawings indicate the required size and points of termination of conduits, and the number and size of wires and suggest proper routing of conduit. Install conduit with all necessary offsets, junction boxes, and fittings to conform to the structure, avoid obstructions, preserve headroom, maintain required accessibility, and satisfy the requirements of the governing codes and the standards of good practice.

C. Architectural and structural drawings and specifications take precedence over the electrical drawings in the representation of the general construction work. Civil drawings take precedence in the representation of site work. Refer to the drawings, specifications, and reviewed shop drawings for all work, in order to coordinate electrical work with other work of the project.

D. When changes in indicated locations or arrangements are necessary due to conditions in building construction, rearrangement of furnishings or equipment, or conflict in location, make such changes at no cost to Owner, provided that the change is ordered before conduit is installed and that length of conduit run is not revised by more than ten percent (10%) of indicated run, for conduits 1" nominal or smaller, and five percent (5%) for larger conduits.

E. Bring discrepancies between different drawings, between drawings and actual field conditions, or between drawings and specifications, promptly to the attention of the Architect for decision, and stop pertinent work subject to resolution of the conflict.

F. Equipment in mechanical, electrical and signal rooms or spaces has been laid out in accordance with the requirements of typical equipment of the class indicated. Modify wiring and location and pay all costs, to meet to the requirements of the particular manufacturer's equipment which is installed, where it is different from that shown on the drawings. Do not use equipment which exceeds space or which infringes on required aisle or access space.

G. Coordinate the location of the lighting fixtures and framing with the ceiling construction so that the overall pattern is acceptable to the Architect. Architectural reflected ceiling drawings, plans and details govern. Locate lighting fixtures in mechanical and equipment rooms to avoid ductwork, piping and equipment. Coordinate location with trade supplying equipment prior to lighting fixture installation.

H. Locate sleeves, floor and wall outlets, and devices serving equipment, built-in fixtures and appliances, in accordance with dimensions on the respective equipment drawings of the equipment supplier.

I. Provide clarifying details where required by inspecting authority and obtain Architect's and Inspector's approval prior to installation.

3.3 RESPONSIBILITY

A. Provide complete functioning systems and include all labor, material and associated tools and transportation required for the system to operate safely and satisfactorily. Provide empty conduit systems where specified, complete, clear, and with pull wires, ready to accept conductors and allow for equipment installation.

B. Provide all work indicated on the drawings whether or not specifically mentioned in the specifications.

C. Coordinate the installation of electrical items with the schedules for work of other trades to prevent delays in total work. Assume responsibility for any cooperative work which must be altered due to lack of proper supervision or failure to make proper provision in time. Perform alterations to Architect's satisfaction, and pay all costs.

D. Resolve code conflicts prior to installation. Remove and replace all work conflicting with codes or, in the Architect's opinion, not meeting specified requirements and pay all costs.

3.4 QUALITY ASSURANCE

A. Provide an experienced superintendent in charge of erection of the work, together with all necessary journeymen, helpers and laborers required to properly unload, erect, connect, adjust, operate and test the work involved to provide a neat, workmanlike installation. Latest industry standards are considered minimum.

B. For the actual fabrication, installation, and testing of the work of this section, use only thoroughly trained and experienced personnel who are completely familiar with the requirements for this work and with the installation recommendations of the manufacturers of the specified items. Where specified, provide factory personnel for testing and adjusting.

C. For major equipment such as transformers, switchboards, panelboards, transfer switches, motor control centers, circuit breakers, control devices, etc., submit letters from principals of the equipment manufacturing company, with bid proposal, specifying the location of factory authorized parts and service organizations intended to serve the subject project.

D. For signal, communication and specialized systems, perform all work in accordance with instructions provided by, and under the supervision of, factory authorized agents. Provide evidence that the factory agent has five projects equal in scope to specified systems, operating satisfactorily. Submit a letter, with bid proposal, from principals of the equipment manufacturing company specifying the location of factory authorized parts and service organizations now in service intended to serve the subject project, the length of time which they have been in operation (which shall not be less than three years) and the guarantee available for the continued operation.

3.5 EXISTING FACILITIES

A. Examine the drawings and specifications of the completed work and inspect the site to establish the scope of demolition work and new work to be provided under this sections and clarification of the phasing of the work.

B. Based on project phasing and scheduling, demolition work will be taking place in and around existing areas that are to remain in service. Where the work under this section affects or interferes with the operation of any existing areas to remain in service, or portions of the work already in operation, provide all necessary work and material including premium pay, required to avoid shutdown of these areas during normal operations. Obtain Owner's approval for shutdown, in writing, 48 hours prior to shutdown.

C. Existing electrical and signal facilities outside of the demolition area to remain in place and in service during demolition.

D. Unless specifically noted or otherwise indicated or directed, remove all existing electrical equipment in the areas to be demolished. Deliver all equipment removed, including lighting fixtures, to the Owner's representative.

3.6 EXCAVATION, BACKFILLING

A. General: Provide excavation, backfilling, and pumping required for work under this section, in accordance with requirements of Earthwork Section, Division 2, of the specifications. Remove surplus materials as directed.

B. Existing Paving: Where trenches are required through existing paving, resurface, after installation, to match existing in accordance with appropriate sections of Division 2, using accredited journeymen of respective trades.

C. Conduit Trenches: Provide cover over buried conduit, where not otherwise detailed or noted, and in accordance with NEC limitations, as follows: 30" over duct banks; 30" over secondary and signal conduits outside building; 24" for 1 ½" and larger secondary and signal conduit within building footprint. Cut trenches to bottom of conduit, allowing for concrete encasement where specified, and make cuts as narrow as possible. For nonmetallic conduit without encasement where permitted elsewhere herein, excavate 4" below conduit and backfill with sand. Snake conduit to allow for expansion. In rock, excavate 6" below conduit and backfill with gravel for encased conduit and sand for direct buried conduit. Separate signal and power conduit in a common trench by 12" of tamped earth or 6" of concrete. For electric and telephone utility services, conform with utility company requirements where more restrictive.

D. Within Building Footprint: Run buried conduit, 1¼" nominal and smaller, 6" minimum below slabs in contact with earth. Encase as described for underground conduit. Conduits with diameter less than 1/3 of slab thickness may be run in slab on grade where practical and where accepted by the Architect in writing.

3.7 EQUIPMENT PADS AND CURBS

A. Install floor mounted switchboards, transfer switches and transformers on 3" high level concrete pads in basement, ground floor where on grade and roof levels, in mechanical rooms on all levels, and where indicated. Coordinate with equipment supplier so that device handles do not exceed 6'-6" above working surface per NEC. Extend pad in front of devices or metering to maintain code or utility company height limits.

B. Provide exact pad size, location, and conduit entries based on equipment shop drawings to concrete section for construction.

3.8 SLEEVES, OPENINGS, CUTTING AND PATCHING

A. Locations of Openings: Locate all chases, shafts, sleeves, openings, anchors and inserts required for the installation of the electrical work during framing of the structure and before concrete placement. Obtain approval from the Architect, in writing, for penetration of structural members or blockouts through slabs for grouped conduits, prior to installation.

B. Cutting and Patching: Provide, per Architect's requirements, cutting, core drilling and associated patching required due to improperly located or omitted openings, using accredited journeymen of the respective trades and without cost to Owner. In a like manner, patch openings in existing walls or floors cause by removal of conduit. Do not sleeve, cut nor drill structural members nor footings without Architect's written approval. Fill all blockouts and preformed openings provided for work under this section with concrete in a manner to maintain the fire rating integrity of the floor or wall.

C. Location of Sleeves:

1. Place conduits which rise through slabs on grade before concrete is poured.

2. For 1" or smaller conduits penetrating non-rated interior walls, solidly grout around conduits in concrete and masonry and solidly plaster around conduits in plaster or dry wall.

3. For all conduits penetrating rated walls and floor slabs and for 1¼" or larger conduits penetrating walls, provide sleeves of ample size to provide ½" minimum annular space. Center conduit in sleeve and support independently of sleeve.

D. Types of Sleeves:

1. Sleeve Assemblies: Provide UL listed assemblies for penetrating rated walls or floors in accordance with their fire rating. Requirements herein are minimum. Submit shop drawings.

2. Suspended Floor Slabs: Standard weight, galvanized steel pipe, stubbed 1" above finished floor. Cap unused sleeves to maintain floor rating.

3. Interior Walls and Partitions: Adjustable galvanized sheet steel with wall flanges and plaster lip. Provide 22 gauge for 2" and smaller conduit, 20 gauge for larger conduit.

4. Membranes: Stub sleeve 6" beyond membrane and provide flanges suitable for sealing of membrane. Obtain Architect's approval of sleeve detail.

5. Exterior Walls Below Grade: Provide, where entering rooms below grade, sealing fitting consisting of oversized sleeve and modular mechanical type seal consisting of interlocking synthetic rubber links shaped to continuously fill annular space between conduit and sleeve (or wall opening for existing walls). Tighten bolts to form watertight seal. Install per manufacturer's directions.

E. Installation: Cut all sleeves smooth, ream and install perpendicular to floor or wall.

F. Escutcheons: In finished locations exposed to public, provide chrome plated split type escutcheons held on by setscrews where conduits pass through floors, walls, and ceilings. Provide plates on conduit extending through sleeves.

3.9 CAULKING

A. Provide as specified herein and detailed on the drawings.

B. Conduit Penetration: Through exterior walls, caulk conduit penetrations for full wall thickness for waterproofing. At fire rated floors and partitions, pack sleeves with approved packing for full sleeve depth and caulk both ends.

C. Conductor Penetration: Where sleeves or openings in fire rated floors and partitions contain conductors not enclosed in a raceway, provide UL approved seal of the sleeve or opening per manufacturers' instructions and code requirements.

D. Compound Characteristics: Putty like; workable with hands down to 35°F; firm up to 300°F; remain pliable when exposed to air; adhere to metal, plastic, concrete, masonry and cable insulation; harmless to hands; seal without causing deterioration of materials sealed.

E. Fire Rated Walls, Partitions or Floors: UL classified fire retardant assemblies.

3.10 FLASHING

A. Wherever conduit extends through roof, install a four pound seamless lead flashing assembly and counter flashing. Coordinate installation of flashing with roofing installation. Provide pitch pockets as option and where indicated.

3.11 NOISE AND VIBRATION

A. General: Provide systems free of noise and/or vibration transmission to building from transformers, rotating machinery or electrical equipment through structure or conduit connections. Provide sleeved openings for all conduit penetrations between rooms of low and

high ambient sound levels, caulked to ensure airtight resilient closure. Correct, at no cost to Owner, conditions resulting in noise transmission to facility from work under this section.

B. Connections: Connect to motors, transformers and all isolated or vibrating equipment with 24" minimum length of liquid tight flexible conduit, slack connected. For dry type transformers, conduit may be stubbed into bottom, not connected to, but bonded to, frame, in lieu of flexible connections.

C. Vibration Isolation: Provide between structure and vibrating or rotating equipment furnished and/or installed under this section.

Equipment	Design Deflection	Isolator
Transformers (Below 100 KVA)		
Slab, On Grade	0.06"	PN
Above Grade, Supported	0.3"	HMN*
Above Grade, Suspended	0.2"	HN*
Transformers (Above 100 KVA)		
Slab, On Grade	0.06"	PN
Above Grade, Supported	0.3"	HMN*

*Equipped with preapproved seismic restraint as noted by an assigned "R" number.

D. Switchboards, Distribution Boards, Transfer Switches: Manufacturer to size, brace and arrange bus within gear and design enclosure to preclude hum and vibration. Provide sound baffles and shock mounts for mechanically-held relays and contactors.

E. Wiring: In multiple runs of feeder conductors in conduit or wireway, twist associated phase and neutral conductors together to avoid abnormal field generation.

F. Equipment Frames: For vibrating or rotating equipment to be isolated, provide mounting frames and/or brackets to carry the load of the equipment without causing mechanical distortion or stress to the equipment.

G. Machinery Rooms:

1. In machinery and electrical rooms located above occupied spaces, do no penetrate floor slab without specific approval in writing. Where floor has membrane, avoid penetrations and run all conduit overhead.

2. In general, run conduits to motors and equipment overhead. For overhead drops exceeding 8' in length or floor risers over 2' high, provide unistrut or pipe brace to floor or structure. For slabs in contact with earth, run conduit as specified under other paragraphs herein. Verify stub-up location with equipment supplier.

3. Do not run conduit through vibration isolated (floating) concrete slabs.

H. Outlets:

1. Do not use back-to-back outlets or through boxes. Separate outlets on opposite sides of wall by 12" minimum unless otherwise detailed.

2. In rated walls provide separation as required by Code.

3. In sound insulated floors, ceilings, and wall partitions, provide acoustical outlet box pads, pliable, putty-like, ¼" thick, per manufacturer's instructions. Include boxes for receptacles, switches, telephone and data outlets. Isolate all conduit within the sound rated floor ceiling assembly from the building construction at points of support or contact by means of approved resilient sleeves, mounts or underlayments ¼" thick.

3.12 SEISMIC AND BRACING REQUIREMENTS

A. Scope: Brace electrical systems and equipment to withstand lateral and vertical forces that result from earthquake or wind, in accordance with NUSIG guidelines.

B. Equipment: Anchor all equipment, switchboards, panelboards, transfer switches, motor and engine generator sets and transformers by securely bolting them in place to the building structure. Install vibration isolation devices where specified. Provide bolts, anchors and bracing to withstand acceleration of 0.5 g. Equipment manufacturer to submit weight, center of gravity and method of fastening required for seismic anchoring.

1. For equipment weighting 1000 pounds or more, submit calculations for anchorage prepared by a structural engineer, registered in the State, conforming to all applicable codes.

C. For conduits, 2" nominal and larger, suspended more than 12", provide diagonal bracing to structure at hangers, at changes in direction, and on approximate 30' centers, installed along with conduit in accordance with NUSIG and using approved components. Rework of other trades due to late installation of bracing is the responsibility of this section.

D. For conduits crossing seismic separations, provide approved fittings or combinations of fittings, that permit horizontal expansion or contraction and vertical and angular deflection. Selection of fitting to be based on the dimension of the separation and conduit size. Refer to Raceways and Wireways".

E. Lighting Fixtures:

1. Pendant Fixtures: Provide approved seismic fixture suspension allowing for 45° swing in all directions without impacting adjacent obstructions or structure. For stem mounted fixtures, provide approved seismic ball aligners at fixture and outlet box, and 3/32" stainless steel aircraft cable in each stem and with the circuit conductors, continuous from the fixture housing, through the outlet box, and attach directly to the structure above. Within the fixture housing, provide a mechanically crimped cable loop and secure to the housing with a closed eye bolt nut and lock washer. At the structure above, provide a cable loop and closed eye threaded lag screws and steel wedge drilled anchors. Level and adjust fixtures and remove cable slack before attaching to the fixture housing.

a. Where pendant fixtures are indicated to be cable supported, provide 3/32" (minimum) stainless steel aircraft cables, cable to rod swivel adapters, ¼-20 rod extensions above the ceiling to the structure. Brace the rod seismically with a rod fitting and (3) 12 gauge steel wires extended from the rod to the structure at 120° angles.

b. If a 45° swing cannot be achieved, brace fixtures to prevent contact with the adjacent obstruction or structure. All fixture suspension assemblies to be State of California approved.

c. Submit a sample of the seismic ball aligner and details of the cable attachments and assemblies with the fixture ship drawing submittal.

2. Suspended acoustical ceiling system: Suspend recessed fixtures with two 12 gauge wires at opposite ends per California building Code Chapter 47. Support recessed fluorescent fixtures from building structure with steel support wires, two 10 gauge at diagonal corners or four 12 gauge at four corners. Allow ¼" slack in wires. Attach fixture positively to ceiling members with attachments having a capacity of 100% of the fixture weight in all directions. Support fixtures weighing over 50 pounds directly from structure with approved hangers, and attach the fixture positively to ceiling members. Attach surface fixtures to main runners with a minimum of two approved clamping devices, 14 gauge minimum, and support each clamp from ceiling structure with 10 gauge steel wire.

3.13 GROUNDING SYSTEM

A. General: Provide service and separately derived system grounds with resistance to ground of three ohms or less and in accordance with applicable code requirements. Maintain equipment ground continuity through entire system including raceways, wireways, equipment enclosures, lighting fixtures and devices. Provide grounding as specified and as shown on drawings. Include equipment ground conductor in all nonmetallic conduits, in all feeders as scheduled on the drawings and in branch circuiting where indicated on the symbol list. Use green insulated copper ground conductors sized per tables herein. In steel frame buildings, bond a minimum of two columns to service ground with conductors sized for service ground. Bond to building reinforcing bars embedded in concrete footings or foundation, which equal 20 feet of ½" diameter steel, prior to concrete pour.

B. Service Ground:

1. Provide service ground bus consisting of a copper bus bar with a minimum of six ground studs mounted on wall. See details on drawings. Terminate all ground conductors at service ground bus. Locate at accessible location in main electrical room or as otherwise indicated. Engrave "Service Ground Electrode". Where additional ground buses are indicated, provide similar construction. Submit ground bus shop drawing.

2. Provide ufer ground consisting of 30' length of bare copper conductor extended full length and embedded along bottom of building concrete foundation in direct contact with earth, supported to provide 2" concrete encasement minimum. Bring loop out at center to service ground bus. Extend to foundation reinforcing steel.

3. Provide, in accessible location, exothermic bond to a minimum of two steel columns or to reinforcing of two concrete columns with insulated ground conductor in steel conduit to service ground bus.

4. Bond from building cold water main, 2" or larger, within 5' of building entry, to service ground with insulated ground conductor in steel conduit to service ground bus. Make the cold water pipe system continuous by bonding around insulating joints. Utilize cast bronze heavy duty ground clamps with bronze bolts and nuts.

5. Extend neutral and equipment ground from service switchboard or switchgear (ahead of service mains and neutral bus link) with insulated conductor in steel conduit to ground bus.

6. Extend separately derived system grounds to service ground bus when located in same building as service. In separate buildings, provide separate service grounds.

7. Service Ground Conductor:

Service (or Transformer Secondary) Amperes	Embedded AWG	Cold Water & Service Ground AWG	Conduit
400A and Less	1/0	1/0	1"
500A - 800A	2/0	2/0	1"
900A - 2000A	4/0	4/0	1"

8. Where required to obtain specified resistance to ground, drive additional ground rods, number as required, and connect to service ground bus with insulated conductor in steel conduit.

9. Where ground loop is provided in main electrical room, extend both ends of loop conductor to service ground bus in steel conduit.

C. Separately Derived System Grounds:

1. Ground transformersand uninterruptible power supplies from neutral bus or bushing to main service ground at service ground bus. In electrical rooms remote from the service ground, provide separately derived system grounds. Extend insulated ground conductor in steel conduit per Paragraph D.

2. For electrical rooms in contact with grade, provide 25' length of bare copper conductor embedded along bottom of closest 30' or longer building concrete foundation and extend to ground bus located in electrical room, as described for service ground. Bond from ground bus to cold water pipe (2" minimum), and to steel beam or column with insulated conductor in steel conduit.

3. For electrical rooms above grade, provide ground as for rooms on grade to ground bus located in the closest electrical room on grade or in location as indicated. Extend transformer and/or generator ground to grade level ground bus.

4. Where foundation embedded ground is not practical, provide, where acceptable to enforcing agency, a minimum of four driven rods located at the corners of the room and made accessible through hand holes. Loop a bare copper cable (sized for largest transformer) below the slab. Ground from ground bus to cold water pipe (2" minimum) and steel beam or column with insulated conductor in steel conduit.

D. Separately Derived System Grounding Table:

KVA	208/120V AWG Size-Conduit		480/277V AWG Size-Conduit	
15 and Less	8	¾"	8	¾"
30, 45	6	¾"	8	¾"
75	2	¾"	6	¾"
112-1/2	1/0	1"	4	¾

1. For shielded transformers, bond incoming ground, shield, core, secondary neutral and secondary ground, and ground to building ground system.

E. Ground Continuity:

1. Provide green THWN insulated ground conductor in all nonmetallic conduits, each conduit run for primary and secondary feeders and where indicated for branch circuits. For lighting circuits, connect ground wire to fixture ground lead where available or bond to fixture housing by mechanical means. Connect grounding conductors to ground busses in panels, motor control centers and switchboards, and to terminals on devices, and bond

to all equipment. Bond feeder grounds to all metallic pull and junction boxes. Provide copper ground conductor, sized not less than following (up to 600V systems):

Circuit Device to Setting, Amperes:	Up to 20	25 to 60	70 to 100	110 to 200	225 to 500	550 to 600	700 to 800
Ground Conductor AWG Size:	12	10	8	6	2	1	1/0

a. For parallel feeders or circuits, run ground in each conduit. Refer to schedule on drawings.

2. Provide ground bushings, fittings, and jumpers as required at expansion and seismic fittings, isolated sections and wherever ground continuity is broken. Provide ground bushings on conduit stub-ups and bond to enclosure and ground bus.

3. Bond plug strip, light track, isolated metal parts of lighting fixtures, and ground terminal of receptacles to equipment ground.

4. Provide separate green ground conductor in circuits serving isolated ground outlets, ground fault outlets, and all outlets in computer rooms and room with raised deck floors.

F. Antennas and Masts: Provide 1 #6 (minimum) THWN copper ground conductor in ¾" conduit from antennas and masts to service ground, or 2" or larger cold water pipe.

G. Communications Ground: Provide 1 #6 (minimum) THWN copper ground conductor in ¾" conduit from main telephone room and/or telephone terminal to service ground bus if available or to cold water pipe 2" or larger. Extend to other telephone terminals where indicated.

H. Materials and Methods:

1. For ground loop and/or buried ground conductor, use soft drawn stranded copper conductors size as scheduled. Snake buried conductors to allow for settlement. Bury ground loop conductors 12" minimum below concrete slabs on grade.

2. Install continuous conductors without splices. Where joints are required, use exothermic welding or UL approved compression connection to join all conductor strands, providing completed joint equivalent to or larger than conductor. Obtain inspection before covering joints.

3. Provide service and separately derived system ground conductor embedded at bottom of foundations and extend to ground bus.

4. Bond to steel columns or reinforcing steel of concrete columns with suitable copper to steel exothermic connections.

I. Ground Electrodes:

1. Where specified or required, provide ground rods driven a minimum of 10' into the earth. Locate in precast concrete hand holes. Engrave cover "Grounding Electrode". Where driven ground rods are precluded by rock, propose and submit equivalent alternate for review.

2. Ground rods to be of cone pointed electrolytic copper bonded to carbon steel core, sectional type where over 10' in length, die stamped near top with name or trademark of the manufacturer and length of rod in feet; diameter sufficient to permit driving without damage, but not less than 5/8".

3. Bond ground wires to rod with exothermic weld or UL approved compression connection.

3.14 INSTALLATION OF RACEWAYS AND WIREWAYS

A. Deliver raceways and wireways to the site in standard lengths, and store where continuously protected from moisture and weather.

B. Conduit sizes on the drawings are minimum, sized for copper conductors, for normal (THW) insulation. Use ¾" trade size minimum for underground runs. Increase sizes where required by physical conditions, or conductor insulation's. Do not combine runs without written approval. Allow for grounding conductor as described under paragraph titled "Grounding System".

C. Conceal conduit from view above ceilings, below floors or in walls where possible. Refer to Architectural Sections and Details to determine conduit routing required to conceal conduit.

D. Do not run in concrete slabs without written permission from the Architect. Conduits with diameter less than 1/3 thickness of slab (thickness is measured above flutes of deck) shall, where permitted in suspended slabs, be limited to 5% of slab in 100 sq. ft. area with a minimum spacing of 1'-0" o.c. as per code for fire resistive two hour floor. Route conduit to maintain slab fire resistive rating and structural integrity as acceptable to the enforcing agency. Obtain agency approval prior to pouring concrete.

E. Conduit may be exposed to view in mechanical rooms, electrical rooms, shop and utility areas and where indicated. Install all conduit runs parallel with or perpendicular to structural members. Surmount obstructions by use of bends, offsets, and where necessary with junction and pull boxes. For surface mounted outlets and small junction boxes within 7' of floor, use cast boxes and/or condulets.

F. Cut conduits and raceways square and free of burrs. Ream conduit ends and clean conduits before pulling conductors.

G. Cap open ends of conduits with approved manufactured conduit seals until ready to pull in conductors. Install as complete system, mechanically and electrically continuous between outlets, gear and equipment.

H. Where conduits or wireways cross expansion or seismic joints, provide approved expansion fittings, or combinations of fittings, which allow deflection in all directions equivalent to twice the movement allowed in the structural design. For conduits 1¼" trade size or smaller, 18" minimum length of weatherproof flex, slack mounted, may be used.

I. For bends and offsets in conduit 1" and larger, use larger radius factory fittings not less than 8 times the nominal conduit size or bend with a hydraulic bender meeting NEC Table 346-10 exception. Refer to additional requirements under Paragraph titled "Interior Telephone and Data Systems Provisions". Replace all flattened, deformed or kinked conduit.

J. Route raceways and wireways so as to prevent insulated conductors from being subjected to high ambient temperature conditions. Maintain the following minimum clearances:

1. Crossing noninsulated pipe or duct - 3".
2. Crossing insulated pipes or ducts - 1".
3. Parallel to noninsulated pipes or ducts - 3".
4. Parallel to insulated pipes or ducts - 6".

K. Provide No. 14 AWG black iron pull wire or polyethylene or nylon pull rope in all empty conduits and stubs over 10' in length, extending at least 12" beyond conduit. Pull rope tensile strength to be 240 pounds up to 1½" conduit and 800 pounds for larger conduit. Submit pull rope data with shop drawings.

L. Stub conduit into bottom of dry type transformers where possible and bond to case.

M. Terminate branch circuit, communication and signal conduits turning from floor into interior removable nonmasonry partitions, freestanding appliances and equipment, with flush floor couplings before extending conduit.

N. Terminate conduits in concrete light pole bases a vertical distance of 4" above top of foundation and inclined towards the light pole hand hole. Extend conduit stubs a minimum distance of 3' from outside of concrete foundation and cap. Before pouring of concrete bases, position all conduits at correct height and bond together. Hold anchor bolts and conduits in place by means of templates until concrete sets. Allow 72 hours for concrete set before erecting standards.

O. Where entering refrigerated spaces, provide approved compound filled sealing fitting, installed in accessible location, on warmer side of wall.

P. Secure rigid or IMC conduits to panels, pull boxes, wireways and enclosures with locknuts, inside and out, and provide impact resistant plastic, insulated throat or malleable iron bushings at terminations in pull boxes, wireways, signal cabinets, boxes and enclosures. Zinc insulated throat hubs with "O" ring gaskets may be used in lieu of double locknut and bushing. For feeder conductors No. 4 AWG and larger, provide steel or malleable iron insulating bushings with plastic liner. For EMT provide insulated throat connectors secured with locknut on interior of box or enclosure. For flexible conduit, provide insulated throat die cast twist-in connectors secured with locknut on interior of box or enclosure, or steel twist-in connectors with plastic bushing, and locknut. At switchboards and bottomless gear and equipment, terminate conduits with ground bushing bonded to ground bus with code size conductor, No. 8 AWG minimum. Use approved coupling or unions. Running thread, threadless coupling, or split coupling connections are not permitted,

Q. Where conduit enters the top of drip proof gear, make connection with bolt on hubs.

R. Field thread rigid and IMC conduit conforming to American Standard Pipe Threads tapered for the entire length at ¾ inch/foot. Treat threads with protective coating to prevent corrosion, but maintain electric continuity.

S. For underground steel conduit coat all joints and points where wrenches have been applied, with bituminastic paint.

T. Extend underground stub outs as shown on drawings, but 3' minimum beyond building foundations or concrete paving adjacent to building.

U. Where conduit extending into building from site enters occupied level, slope conduits to drain away from building and seal to prevent entrance of moisture into building.

V. Provide compound filled sealing fitting for conduits terminating in or passing through hazardous areas per applicable sections of code and as indicated.

W. In vehicle maintenance and garage areas, consider area within 18" of floor as hazardous. Run conduit overhead and keep conduit, devices and equipment out of hazardous area where possible. Unless otherwise indicated, area classification is Class I, Division I, Group B.

X. Route openable raceways and wireways so as to be readily accessible.

Y. Gutter and wireway dimensions indicated on the drawings are minimum. Provide sufficient cross section to contain conductors including all splices in accordance with code allowed percent fill. Where covers occur on bottom, provide removable wire supports not more than 3' apart.

Z. Refer to paragraph titled "Identification" for additional requirements.

3.15 CONDUIT

A. Use Rigid Steel conduit in all sizes, or Intermediate Steel conduit up to 3": In slab on grade; on exterior; encased in exterior masonry or concrete walls; in wet locations; in refrigerated spaces; in exposed locations within 7' of floor or walking surfaces; in suspended slabs, but only where permission is obtained from Architect in writing for conduit to be run in slab.

B. Use Rigid or Intermediate steel conduit for trade sizes 2½" and larger installed above grade throughout.

C. For Underground Installations:

1. Use Rigid, Intermediate Steel, or Schedule 40 PVC. Provide rigid or intermediate steel conduit elbows (2" minimum above floor) for stub-ups and risers. Use PVC conduit with PVC risers, terminating in PVC threaded couplings flush with 4" high raised concrete pad at Contractor's option for telephone, signal, communication and data systems. For fire alarm systems use rigid or intermediate steel only.

2. For utility company conduits, obtain and observe utility company standards. Obtain and observe utility company standards. Obtain utility company approvals.

D. In corrosive soils wrap underground steel conduit system with plastic wrap . Where Architect indicates in writing that soil is noncorrosive, underground steel conduit and couplings may, in lieu of concrete encasement, be protected with plastic wrap or coating:

1. Factory wrap with one-half lap of twenty mil thick identified polyvinyl tape to provide uniform forty mil coating. Field taped joints shall provide equivalent coating.

2. Factory coat with forty mil thick PVC coating bonded to conduit. Coating on couplings shall extend beyond coupling ends for one conduit diameter up to 1½".

3. Extend wrap for 12" minimum where conduit emerges from ground.

E. Use Rigid or Intermediate Steel or Electric Metallic Tubing in Trade Sizes 2" and Smaller for: Dry concealed locations; exposed locations above 7' from floor or walking surfaces; in electrical and telephone rooms at all heights.

F. Use Flexible Steel Conduit, ½" minimum trade size, 6' maximum length, for connection to lighting fixtures from fixture outlet. Where structural conditions make use of rigid conduit or tubing impractical, obtain written permission from Architect to use flexible conduit.

G. Use 24" Minimum Length of Liquidtight Flexible Steel Conduit, ½" Minimum Trade Size, Slack Connected for: Connection from outlet to motor and other moving or vibrating equipment; code length to lighting fixtures in damp or wet locations; to transformer housings; to kitchen equipment; all flexible connections in exposed areas. Where conduit stubs into bottom of dry type transformer, without connecting to enclosure, bond conduit to enclosure and omit flex connection.

H. Provide bend radius for flexible conduit not less than 5 times the trade size.

I. For connection to exterior lighting standards from normal system, Schedule 40 PVC may be used without encasement outside of building area. Use rigid steel under building stubbed 5' beyond building, and in concrete pole base. Include ground wire and size conduit accordingly. For emergency circuits, use wrapped steel conduit or concrete encased PVC.

J. Where penetrating floors or fire separations, use UL listed fittings and/or devices to maintain separation integrity.

K. Where crossing existing pavement, place conduit under pavement by approved jacking method. Keep jack pits 2' clear of edge of pavement. Do not undermine paving with excessive water. If jacking cannot be accomplished, obtain Architect's permission in writing to cut and patch paving.

L. When forming bends in nonmetallic conduit, apply heat without distorting or discoloring conduit.

3.16 SUPPORT AND FASTENING OF RACEWAYS AND WIREWAYS

A. Support vertical conduits passing through sleeves with UL approved riser clamps secured to the conduit and resting on the building structure. Support vertical conduits 1¼" and larger a minimum of once, and on 15' centers maximum. For vertical conduits smaller than 1¼" provide standoffs on 8' centers maximum. Support conduits adjacent to walls with preformed channels. Support freestanding risers with conduit racks of angle iron or channel iron members, rigidly bolted or welded together and adequately braced. For securing vertical conduits 1" or smaller to metal studs, horizontal ¼" diameter steel pencil rods tied with No. 16 gauge galvanized steel, twisted tie wires, is acceptable.

B. Install rigid steel conduit with threaded couplings. Support conduits 1" and larger on 10' intervals, smaller than 1" on 7' intervals, all sizes within 3' of connection to box, cabinet or fitting.

C. Support electric metallic tubing on maximum spacing of 10' and within 3' of connections to box, cabinet or fitting including couplings.

D. Support flexible metal conduit on 4' intervals, within 1' of outlet box or fitting (except at connections to recessed lighting fixtures) and within 2' of vibrating equipment.

E. Support gutter and wireways at 5' intervals and at changes of direction, in a manner to allow full access.

F. Attach to field poured concrete with preset inserts for conduits 3" and larger and with preset inserts or steel wedge screw anchors for smaller sizes. Shot driven studs are not permitted without written approval from the Architect. Submit size, quantity and approximate weight with request to use shot driven studs. Secure conduit with cast conduit clamps and cadmium plated machine or lag screws.

G. Attach to plaster, dry wall or hollow masonry walls with metal toggle bolts.

H. Attach to solid masonry walls with steel wedge anchors.

I. Do not fasten rigid conduit or tubing to equipment subject to vibration or mounted on shock mounts.

J. Secure conduits 1¼" and smaller to steel deck where permitted by Architect with cast or malleable iron conduit clamps and 1" minimum cadmium plated or galvanized sheet metal screws.

K. Where attaching to steel members, use beam clamp, welded threaded studs or machine screws.

L. Where not otherwise specified herein, support all sizes of suspended conduit from structure with factory made pipe hangers with split hinged malleable iron or springable steel pipe rings and solid round mild steel rods, ¼" diameter for up to 1¼" conduit, 3/8" diameter up to 2" conduit and ½" diameter for larger conduit. Friction type conduit support hardware and attachments are

not acceptable. Where required conduit spacing is more frequent than available structural members, provide intermediate steel support as required.

M. Provide trapeze type hangers where three or more conduits run parallel and clamp conduit to hanger. Provide diagonal seismic bracing for suspended runs of conduits 2" trade size and larger. Use unistrut type channel for trapeze assemblies. Lathing channels are not acceptable.

N. Provide plated or galvanized hangers, threaded, rods, channels and metallic support and fastening material or provide two coats of rust resistant paint, in all damp or corrosive locations (e.g., vehicle maintenance garage, labs).

O. Do not use perforated metal strap or wood as support material.

P. Support conduit to structure above suspended ceilings 3" minimum above ceiling to allow removal of tile. Do not support from T-bars or T-bar hanger wires. Maintain 2" clearance above recessed light fixtures.

Q. Above fixed ceiling and in stud walls, tie conduit 1" or smaller to furring, support channels capable of carrying the weight, or studs with No. 16 gauge galvanized wire ties 4' on center, maximum.

R. Attached to precast or prestressed concrete as described under applicable sections of the specifications. Coordinate installation of precast unistrut or inserts where required, or obtain written approval from the Architect of alternate support methods.

3.17 INSTALLATION OF BOXES

A. Use new, bright stock and store where continuously protected from weather.

B. Install all outlets and boxes in readily accessible locations.

C. Provide additional pull or outlet boxes as required to meet code requirements or to facilitate pulling of wires. Locate in utility areas, above accessible ceilings, or in approved locations.

D. Size boxes for devices contained and the number of wires passing through or terminating therein, not less than 4" square by 1½" deep, or equivalent configuration. Use pull and junction boxes of adequate size for splices and terminations contained therein.

E. For door alarms and switches, use special boxes designed to fit in door frame.

F. For receptacles 30A rating and greater, use 2-1/8" deep box with two gang ring and plate to match device.

G. Use 4-11/16” square box with round plaster ring, for surface mounted ceiling fixtures.

H. Where more than one switch is shown at one location, group behind common plate. Use gang boxes for three or more devices. Provide barrier between 277V switches controlling two or more circuits.

I. Use 4-11/16" square by 2-1/8" deep boxes, minimum size, for more than two flexible connections to lighting fixtures.

J. For wall mounted telephone, data, computer, dictation, MATV or intercom outlets, use 4-11/16" square by 2-1/8" deep box with one gang flush plaster ring.

K. Recess boxes in finished areas, and wherever possible in utility, mechanical and electrical spaces. Provide extension rings and/or plaster rings to finish flush with finished surfaces. Install approved factory made knockout seals where knockouts are not intact, and close all openings.

L. Use cast metal, gasketed boxes for locations noted on drawings and as follows: Stub mounted outlets; surface mounted outlets within 7' of the floor; wet or corrosive locations; outlets on exterior or within exterior walls facing the exterior. For flush mounted outlets, provide adapter plates. Provide threaded plugs in unused hubs.

M. For concrete work, use concrete boxes which allow the placing of conduit without displacing the reinforcing bars. Use masonry boxes in block and masonry walls.

N. Use extension rings with blank covers for surface extension from flush box.

O. Support light fixture outlets to building structure and equip with fixture stud and hanger bar or supporting device as required, including outlets for fixtures furnished by others. Support lighting fixtures in excess of 60 pounds to structure independently of outlet box.

P. Do not use back to back outlets or through boxes. See paragraph titled "Noise and Vibration".

Q. Provide boxes for all devices. For devices not specified or scheduled, use boxes as approved, adequate for device to be installed.

R. Combine devices in ganged box with suitable barriers behind common plate where indicated, specified or detailed. Provide separate or barriered boxes for normal and emergency devices.

S. Provide flush mounted box with horizontal single gang ring for surface mounted multi-outlet assembly in metal raceway.

T. Install boxes in a rigid manner, with box hangers, expansion shields in masonry, and machine screws on metal work. Do not nail to structure. Use plated or galvanized screws throughout.

U. Secure pull and junction boxes to the structure independently of the conduits by means of bolts, rod hangers or brackets.

V. Prefabricated Outlet/Junction Box Assemblies: The following types of box assemblies are acceptable, subject to a shop drawing submittal review and the basic specification requirements for outlet and junction boxes.

1. Wiring device outlet box attached to the back of a one piece vertical galvanized steel bracket that incorporates a back wall support flange, and is designed to mount in the floor track of a metal stud partition. Bracket height as determined by the designated device mounting height. Plaster ring attachment to front of bracket. Support flange to assure that box is held in a rigid manner when the dry wall material is attached to both sides of the studs.

2. Branch circuit junction box screwed to a 1½" black iron channel that is secured to the structure above. Branch circuit conduits supported from structure above independently of box assembly per specifications.

W. For communications and signal systems, refer to paragraph titled "Communications and Signal System Provisions".

X. Provide designations per paragraph titled "Identification".

3.18 INSTALLATION OF DEVICES

A. Unless specifically directed otherwise, install switches with single gang vertical plate on latch side of door. Verify door swing before installation.

B. Unless noted otherwise, install duplex receptacles, single receptacles, telephone and communications outlets vertically. Receptacles with ground slot up. Where horizontal mounting is required, locate ground slot to right when facing outlet.

C. Connect receptacle grounding screw to equipment ground conductor where conductor is called for, otherwise bond to outlet box with green ground conductor.

D. Plumb and align all devices and install plaster rings flush with wall surface so that plates fit tight against wall and device surface without strain.

E. On exterior, and interior locations subject to moisture, use weatherproof devices.

F. Within six feet of sinks, basins or sources of running or standing water, use GFI outlets.

3.19 DEVICE MOUNTING HEIGHTS

A. Check architectural details and building equipment drawings before installation of outlets, to determine required outlet mounting heights. Install outlets, under this work, to clear built-in features, furniture and equipment.

1. The electrical drawings take precedence as to quantity and type of outlets and general location.

2. Where architectural elevations have been provided, the elevations take precedence as to mounting height and spacing.

3. Outlets, by symbol, are generally +18", +42", or as noted on the electrical drawings. If an outlet occurs behind casework and there is no architectural elevation, locate the outlet above the counter. Where counter has a backsplash, mount outlet at +4" above top edge of splash. If there is no backsplash, mount at +4" above top of counter.

4. If outlets occur back to back, paragraph titled "Noise and Vibration" takes precedence regarding separation between boxes.

5. If an outlet is symbolized at +42" above a counter and there is a conflict, use the +4" mounting height above top of splash or counter.

6. Verify mounting height of outlets below counters for garbage disposal, hot water dispensers or undercounter refrigerators with equipment shop drawings.

7. Where a cord slot is detailed in countertops, mount outlet below counter at +18".

B. Install outlets for specific equipment or appliances per equipment suppliers' instructions.

C. Mounting height for wall mounted outlet is from centerline of outlet to finished floor, and is indicated on the drawings by "+".

D. Where Not Otherwise Noted or Detailed, Use Mounting heights herein Indicated:

1. Switches and Push Buttons: +42".

2. Receptacle: +18"

3. Receptacles for Fixed Equipment: To suit equipment.

4. Receptacles in Equipment Rooms: +42".

5. At communication and/or telephone terminal backboards, provide multi outlet raceway (Plugmold) below backboard at +8".

6. Desk Mounted Telephone, Data and Intercom outlet: +18".

7. Backbox for Wall Mounted Telephones: +42".

8. Signal System Device Requiring Manual Operation: +42".

9. Manual Fire Alarm Reporting Station: +48".

10. Fire Alarm Audible/Visual or Visual Alarm: +80" to bottom of strobe (ADA Strobe).

11. Thermostats: +48".

12. Signal System Audible Device: Locate outlet so that device clears finished ceiling by 1", where not otherwise indicated.

13. Clock Outlet: +84". Above door, locate outlet so than bottom of clock clears top of door frame by 1" unless otherwise indicated.

14. Bracket Light Outlet: +96", unless otherwise indicated.

3.20 INSTALLATION OF CONDUCTORS

A. Store conductors where continuously protected from sunlight, heat and weather.

B. Install all conductors (line and medium voltage, low voltage, signal and control) in conduit. Complete conduit system and clean and dry conduit before pulling in conductors. Install conductors after general construction work in area has progressed sufficiently to avoid conductor damage.

C. Circuit as indicated on plans and single line diagrams.

D. Provide conductors of identical lengths in parallel feeder runs.

E. Use fish tapes with ball type heads for pulling conductors. Pull conductors in without kinking wires or scoring conduit.

F. Use only lubricant, which does not damage conductors, as a pulling aid.

G. Fan branch circuit and control conductors, size 1/0 and smaller, in panelboards, switchboards and terminal cabinets and tie with plastic ties suitable for conductor size. Lace larger conductors with marline for ½" on 12" centers with intermediate tie wraps. Identify spare conductors (line, control and signal), and ground both ends to enclosure case.

H. Run neutral conductors continuous to panel. Do not combine. Run feeders continuous to panel or equipment without splices. Do not splice or tap in equipment enclosures or conduits. Make necessary splices or taps only in junction boxes, pull boxes or in oversize wiring gutters designed for the purpose at panelboards.

I. Use No. 12 AWG minimum for lighting and power and No. 14 AWG minimum for signal and communications and control, except where special conductors are specified.

J. Allow 18" minimum free length of conductor where terminating in outlet or pull box. Provide longer lengths where indicated.

K. Do not loop through receptacle terminals; connect by means of conductor taps joined to branch circuit conductors.

L. Where branch circuit conductors extend from ground fault interrupting breakers, enclose conductors in plastic tubing within panelboard.

M. See paragraph titled "Identification and Warning Signs".

3.21 CONDUCTOR COLOR CODING

A. For lighting and outlet branch circuits, use factory colored conductors. For motor circuits and feeders, use pressure sensitive colored tapes, in 2" wide minimum bands, at all panelboards, safety switches, motor starters, motor and equipment outlets. Where more than one multi-conductor circuit is run in a conduit, tape each multi conductor circuit together with its neutral at each junction point and outlet.

B. Color Codes for Line Conductors:

Conductor	**Color 120/208V**	**Color 277/480V**
Phase A	Black	Brown
Phase B	Red	Orange
Phase C	Blue	Yellow
Neutral	White	Gray (where permitted or as directed)
Traveler	Brown	As approved
Equipment Ground	Green	Green
Instrument Ground and Isolated System Ground	Green with Yellow Stripes	

C. Color code conductors of cables used in communication and signal systems and control conductors in line and low voltage control panels, motor control centers and supervisory panels. Use white for grounded conductor and green for equipment ground, exclusively.

3.22 CONNECTORS AND TERMINATIONS, LINE VOLTAGE CONDUCTORS.

A. For joints, splices, taps and connections for 600V conductors, use solderless connectors.

B. For branch circuit conductors No. 8 AWG and smaller, use steel spring with semi rigid insulating shell, or setscrew type, taped.

C. Terminate all solid conductors, No. 10 AWG and smaller by a fast holding application of the conductor directly to the binding screws of the equipment to be connected.

D. For conductors No. 6 AWG and larger, use copper or bronze bolted connectors and lugs, or compression type at Contractor's option, sized for conductors. For conductors No. 1 AWG and larger, use lugs with two bolts through tongue, minimum or equivalent anti-turn construction (submit sample). Fasten lugs with flat and spring washers and hex nuts.

E. In panelboard feed through gutters, use copper power distribution blocks to extend conductors from feeder to panel.

F. Coordinate equipment terminations with equipment supplier to insure that terminals provided conform with requirements specified herein.

G. For connections at motors, use lugs on motor and branch circuit conductors, bolted and taped. For conductors No. 8 AWG and smaller, crimp lugs to conductors.

H. Splice grounding conductors by means of exothermic welding and terminate by means of approved grounding connectors. Do not solder.

I. Tape all noninsulated connections with lap wound layers of vinyl plastic tap (Scothch #88) or lap wound layers of rubber tape covered by lap wound layers of friction tape, to provide insulation equivalent to 150 percent of the conductor's insulation, but in no case less than three layers. Split bakelite casings with stainless steel spring clips designed for specific connectors may be used alternately.

J. Position all splices in pull boxes and junction boxes, so they are accessible from the removable cover side of the box.

K. Provide waterproof connections in wet locations. Pencil and roughen conductors and apply rubber tape equivalent to insulation thickness. Cover with two half-lapped layers of 8.5 mil, all weather, vinyl plastic tape, suitable for below freezing application, and coat with sealant. Form conductors into drip loops so that water does not collect on connections. Blow out conduit to remove moisture and seal conduit ends with waterproof compound.

L. Torque all electrical conductor terminations in accordance with equipment manufacturer's directions and industry standards.

3.23 CONNECTORS AND TERMINATIONS, SIGNAL SYSTEM AND CONTROL CONDUCTORS.

A. Run conductors continuous from equipment to terminal cabinets and devices. Do not splice.

B. In terminal cabinet and junction boxes terminate on solder terminals, screw type terminals, telephone type punch terminals or wire wrapped terminals.

C. At equipment or devices terminate on screw type terminals or with plug and socket connections.

D. For fire alarm systems and control use screw type terminals throughout.

E. For flexible connection use stranded conductors and crimp type lugs.

F. For shielded conductors, make shield continuous and isolate shields from ground and other shields.

3.24 CONDUCTOR SUPPORT

A. In vertical risers provide split wedge or cable clamp conductor supports in equipment or intermediate junction or pull boxes, or provide code approved equivalent. Spacing Not to Exceed the Following:

Conductor AWG Size	**Support Spacing (Feet)**
1/0 and Smaller	100
2/0 through 4/0	80

250 MCM through 350 MCM	60
500 MCM	50
750 MCM	40

3.25 EQUIPMENT INSTALLATION

A. Maintain required aisles, work space and clearances in front of equipment and behind accessible sections of freestanding equipment not less than indicated and as required by code.

B. For dry ventilated transformers, maintain minimum clearance between transformer ventilation openings and adjacent structure: 6" below 300 KVA; 18" for 300 KVA and larger.

C. For equipment less than 600V to ground, maintain 3' clear minimum in front, 3½' between accessible side and grounded surface; and 4' between rows.

3.26 EQUIPMENT MOUNTING HEIGHTS

A. Install panelboards and cabinets on a common wall with tops even. Mount panels at 78" to top unless approved otherwise.

B. Mount individual switches, starters, or controls at 72" from finished floor to top. Where required to be lower by equipment arrangement or configuration, maintain 18" to bottom from finished floor.

3.27 EQUIPMENT FASTENING

A. Fasten floorstanding equipment with four ½" bolts minimum. Grout channel sills, where provided, into concrete pad. Fasten surface mounted equipment in excess of 20 pounds to a minimum of two structural wall members. Provide support channel spanning structural members where equipment does not span two members.

3.28 PANELBOARD PROVISIONS

A. Install three ¾" conduits minimum from each flush mounted panelboard into accessible ceiling space above and below panel and cap.

3.29 LIGHTING FIXTURE INSTALLATION

A. Connections: Use Underwriters' Laboratories approved solderless connectors as specified elsewhere herein, for splicing.

B. Blocking: Provide supplementary blocking and support under this section, as required to support fixture from structural members adequate for fixture weight.

C. Pendant Fixtures: Unless otherwise specified, suspend fixture with one piece steel stems 3/8" ID minimum, with matching canopies, and finished with enamel or lacquer finish of color to match fixture or ceiling, as directed by Architect. Where pendant fixtures are indicated to be cable supported, provide 3/32" (minimum) stainless steel aircraft cables and cable to rod adapters. Provide a ceiling plate at each ceiling fitting, with baked enamel finish color to match fixture or ceiling, as directed by Architect. Provide a white #18/4 (minimum) Type SJ cord at one end of fixture row. Provide two supports per 4', 6' or 8' fixture, and uniformly spaced pattern for continuous rows.

D. Pendant Mounted Fluorescent Fixtures, Continuous Rows: Provide rigid coupling between fixtures, fastened to each fixture with a minimum of two bolts. Hang fixtures with two supports

per 8' or 4' fixture. Limit continuous rows to 40' length separated by 1½" minimum with separate circuit connections to separated rows. Do not nipple between separated rows. Provide an approved swivel at the junction of stem and fixture. Where indicated, provide channel bracing of rows of fixtures.

E. Surface Mounted Fixtures: Secure to structural members or to structural channels which span structural members with ¼" minimum machine screws.

F. Refer to paragraph titled "Seismic and Bracing Requirements" for additional requirements.

G. Fixture Outlets: In accessible tile ceilings, locate outlet within 4' of fixture, rigidly fastened to structural member or suspended from structure with rod or channel. In nonaccessible ceilings, provide access to outlet through fixture housing utilizing approved outlet assembly. Provide fixture outlet for each fixture, or continuous row of fixtures, or, in demountable ceilings, for a cluster of fixtures which can be connected by 6' flexible connections.

H. Connections: Do not use fixtures as pull or junction boxes between separated fixtures. Do not flex between separated, suspended fixtures. Surface mounted fixtures, separated by not more than 6" in utility areas, may be nippled together. Connect from recessed fixtures to fixture outlet with 6' length of flexible conduit and conductors with insulation type described under paragraph titled "Conductors".

I. Machine Rooms: Prior to installation, coordinate light fixture location in machine rooms with equipment, piping, and ductwork to properly illuminate room and avoid interference's. Use only ceiling mounted or stem mounted fixtures in elevator machine rooms.

J. For wall mounted fixtures on exterior, mount on cast gasketed boxes. See Installation of Boxes.

K. Adjustable Fixtures: Aim adjustable fixtures as directed by Architect. For exterior units, adjust during evening hours to Architect's satisfaction.

L. Location: Locate fixture outlets, recessed fixtures, and determine the length of custom, continuous row cove or "reverse cove" fixtures, by reference to Architectural reflected ceiling plans and details and measurement of building construction. Do not scale electrical drawings.

M. Lamping: For initial lamping of overhead fixtures during construction, omit diffuser installation. Prior to final acceptance and when directed by the owner in writing, clean the fixtures, remove construction lamps, relamp with new lamps and install diffusers.

N. For fixtures recessed in ceilings rated one hour or more, box around fixture to maintain ceiling integrity. Allow free space around fixture, 1" for fluorescent and 3" for incandescent fixtures.

O. For master/slave arrangement provide flexible whip between fixtures containing circuit and ballast wiring.

P. Electric Signs and Outline Lighting: Provide branch circuits and code required disconnects for signs and outline lighting provided under other sections or by Owner. Coordinate location with equipment supplier.

3.30 AIR CONDITIONING, HEATING, VENTILATING AND PLUMBING CONTROL

A. Provide Under This Section:

1. Motor starters, disconnects, circuit protection, items of industrial control, individually mounted controls, as specified or required.

2. Control wiring in conduit, to remote line voltage control devices, where indicated on the drawings, and where not included under the mechanical or building automation sections.

3. Connections to motors, motorized smoke dampers and controls as shown, but coordinated with equipment supplier.

4. Verification of point of connection to motors with equipment supplier prior to conduit installation. For roof mounted exhaust fans, rise within housing where possible.

5. Connection to package unit controls furnished as part of equipment.

6. Installation and connection of separately mounted electric line voltage thermostats and controls furnished with equipment, as indicated.

7. Line voltage supply circuits for building automation system data gathering panels and consoles. Locations are not indicated. Coordinate locations with system supplier.

8. Line voltage supply circuits from closest appropriate panel to plumbing and HVAC control panels and the like, coordinated with mechanical specifications section and equipment supplier.

9. Connection to devices in piping or ductwork (such as aquastats, solenoids, float switches) installed under Division 15.

10. Installation of, and connection to, variable frequency drives.

B. The Following is Specified to be Provided Under Other Divisions:

1. Furnishing and installation of motors, motorized smoke dampers.

2. Furnishing of thermostats, and controls which are part of equipment.

3. Furnishing and installation of air conditioning chiller starters as specified in Division 23.

4. Installation of devices in piping or ductwork.

C. Refer to Divisions 23 of the specifications, and mechanical and electrical drawings to establish complete scope of work.

3.31 INTERIOR TELEPHONE AND DATA SYSTEMS PROVISIONS

A. Empty telephone and data raceway systems as indicated on the drawings and as specified herein, including all distribution conduit, wireways, blockouts, sleeves, grounds, pull wires, plywood backboards, outlets and plates indicated on the drawings for wiring provided under other sections or by Owner. Minimum conduit to be ¾" trade size for telephone/data outlet.

B. Conduit bends with a minimum radius in feet equivalent to the diameter of conduit in inches, and not exceeding the equivalent of two 90° bends in a single run. Where over two 90° bends are required, install accessible pull box in run. Bush ends of all conduits. Do not use condulets.

C. Terminate conduits at terminal backboards 6" above floor or within 12" of top of backboard. To reduce bends, backboard may be extended up to conduit stubs.

D. Plywood Terminal Backboards: 8' high by length indicated, for telephone, data or signal systems where indicated on electrical drawings, of ¾: thick, APA exterior grade Douglas Fir A-C treated with fire retardant chemical to provide a flame spread rating of not more than 25 when tested according to ASTM E84. Install backboards over plaster or gypsum wallboard, not

directly to studs. Use full sheets where practicable and attached to plaster walls with ¼" flat head toggle bolts. Attach to gypsum wallboard using fire retardant, nonexplosive contact cement, applied in strips spaced 16" on center horizontally or vertically across plywood, and in a continuous band around perimeter of plywood. Install plywood with clear face exposed to view.

3.32 COMMUNICATIONS AND SIGNAL SYSTEM PROVISIONS

A. Provide empty raceway systems, including outlets, device and equipment back boxes, sleeves, grounds, pull wires, terminal cabinets and plywood terminal backboards as indicated on the drawings for wiring systems provided under other sections or by the Owner.

B. Provide back boxes for devices and equipment and terminal cabinet dimensions as required by system supplier.

3.33 ELEVATORS PROVISIONS

A. Required feeders and circuit protective devices for supply and control circuits. Circuit protection and/or disconnect in elevator machine room for power supply. Verify circuit protection device ratings with elevator supplier and make required adjustments. Shunt trip for elevator power supply.

B. Circuits terminating in junction boxes for cab lighting and conduit, for telephone as required. Coordinate location with elevator supplier.

C. Lighting, switches and receptacles GFI in elevator pits, sheave spaces, machine rooms, as indicated and as required by code and elevator section of specifications.

D. Conduit and wire extension and connection to elevator and escalator controllers and control panels from disconnect switches, junction boxes and wireways.

E. Smoke detectors in lobbies, machine room and shaft circuited to elevator room for fire mode elevator operation (Life Safety Fire Alarm System). Control conduit and wiring from heat detectors in elevator machine room and hoist way to power supply shunt trip.

F. Signal circuit from transfer switch for emergency mode operation.

G. Two inch conduit from each elevator machine room or common hoistway to monitoring location, verify location with elevator supplier.

H. Elevator control and signaling wiring is provided under separate section of the specifications.

3.34 ELECTRICALLY OPERATED EQUIPMENT

A. Where electrically operated equipment indicated on the drawings is specified under other divisions of the specification, provide, unless otherwise indicated, all conduit, wiring and connections under this section, as required for proper operation, and in accordance with wiring diagrams furnished by equipment supplier.

B. Install controls furnished by equipment supplier, and provide disconnect switches within sight of controller.

C. Refer to equipment specification for coordination of work.

3.35 PROTECTION AND CLEANING

A. Materials and Equipment: Cover all switchgear, transformers, switchboards, transfer switches, panelboards, busway, lighting fixtures, signal system equipment, etc., stored or installed on the site, with polyethylene sheets or approved equivalent, to protect equipment from moisture, plaster, cement, paint, or other work of other trades. Cover outlet boxes with cardboard or plastic closures. Plug or cap conduit ends until final connection. Protect conduit stubs, stub-ups and risers from construction equipment.

B. Storage: Provide proper and adequate storage facilities. Store conductors, raceways and fittings, in dry, protected locations.

C. Damage: Replace all damaged or defective work, materials or equipment. Install sensitive or delicate equipment after major construction work is completed.

D. Parts: Store and protect all portable and detachable parts or portions of the installation such as spare parts, fittings, fuses, keys, locks, adapters, locking clips and inserts until completion of the work. As a precondition for acceptance of the work, deliver to the Owner's representative and obtain itemized receipt. Include receipts with the Operating and Maintenance Instruction Manual(s) required under other paragraphs of the specifications.

E. Site Cleaning: Periodically remove waste and rubbish and maintain order.

F. Equipment Finish: Clean and polish finished metal surfaces. Clean and prepare prime coated gear for painting.

G. Light Fixtures: Remove dust and handprints from light fixture surfaces. Clean diffusers before project acceptance.

H. Electrical Equipment: Clean exterior and interior of all equipment. Vacuum interiors, do not blow out. Apply permanent identification and remove temporary and unauthorized notations.

I. Acceptance: Remove all debris, dirt, grease and oil from building surfaces, caused by work under this section. Clean out and vacuum electric rooms.

3.36 PAINTING

A. In Equipment and Utility Areas: Provide factory finished equipment including prime coat and medium dark gray finishing over rust-inhibitor.

B. Outdoors and in Wet Locations: Provide additional factory coat of exterior lacquer for a two mils finish thickness. Indicate finish on shop drawings.

C. In Public Areas: Provide shop prime coat for equipment installed flush in painted walls. Finish painting is under Specification Section "Painting".

D. Touchup: Use factory supplied paint for touchup of rusty or scratched surfaces. Replace marred or scratched plated finishes.

E. Supports: All conduit hangers, racks and structural supports for electrical material and equipment under other paragraphs to be galvanized or plated to be field painted, if not plated, under this work in conformance with Specification Section "Painting".

3.37 IDENTIFICATION AND WARNING SIGNS

A. Nameplates - General:

1. Provide laminated, engraved plastic nameplates with ½" high letters for all switchboards, motor control centers, transfer switches and panelboards. Provide similar nameplates with 3/8" high letters for transformers, time switches, individually mounted breakers, switches and controls, and with sheet metal screws. Adhesive mounted nameplates are not acceptable. Refer to single line diagrams and schedules for actual designations and circuit numbers.

2. Include nameplate schedule on shop drawings submittals.

3. Indicate on Gear nameplates:

   a. Line 1 Equipment Designation

   b. Line 2 Voltage, Phase, Number of Wires, Amperes (Switchboards) KVA (transformers, generators).

   c. Example SWITCHBOARD MSS
   d. 277/480V, 3 PHASE, 4 WIRE, 3,000 AMPERES

4. On service switchboards with multiple main breakers label each main breaker and indicate number of mains on each label. Example: Main No. 1 of 3, main No. 2 of 3, etc.

5. Indicate equipment and/or equipment controlled and designation on component nameplates. Examples:

   a. Swbd Breaker: CIR 3 - PANEL 3AA
   b. Motor Switch: TOILET EXHAUST FAN EF-3
   c. Submeter: KWHR SUBMETER AIR CONDITIONING
   d. Time Switch: TSA - PARKING LIGHTS (served from Panel A)
   e. Fire Alarm Terminal Cabinet: Fire alarm system 24V DC

6. Install panelboard nameplates behind panel door in public area and on panel face in equipment rooms.

B. Tenant metering switchboard to have nameplate at meter and service switch indicating circuit number and tenant space number as assigned by Owner. In addition, provide metal nameplate holder at switch for additional nameplate identifying tenant as information is made available.

C. Nameplate Color Schedule:

1. 277V through 600V: Green letters on white label.

2. 120V through 240V: Black letters on which label.

3. Emergency System: White letters on red label.

4. Devices Connected Ahead of Service mains and Substation Secondary Mains: Letter color as for switchboard on yellow label.

5. Fire Alarm System: Black letters on red label.

6. Communication or Signal Systems: White letters on black label. Identify system.

D. Stenciled Designations: Provide readily visible block letter stenciled designations for the following with ½" high minimum letters on background of contrasting color, colors as outlined under nameplates.

1. Junction and pull boxes and cabinets of signal and communication systems identifying system and voltage.

   a. 277V lighting outlet and junction boxes - 277/480V.

   b. 480V outlet and junction boxes - 480V.

2. Feeder conduit runs on 25' centers and on both sides of wall and floor penetrations, where visible from floor and above demountable ceilings. Indicate circuit designation and number on all feeders. Indicate system on all signal and communications system conduit sized 1½" and larger.

E. Labels:

1. At all fusible devices, either individually mounted or part of gear, provide a label (as supplied by fuse manufacturer) or nameplate inside each switch cover, indicating specific type of fuse required for replacement.

2. Provide label, in addition to UL label, for each switchgear, switchboard, panelboard, transfer switch and motor control center indicating the short circuit rating of the gear as constructed and the minimum rating of devices allowable. Submit with shop drawings.

F. Emergency System:

1. Identify all enclosures per Article 700 of the NEC.

2. Paint junction box covers and covers of multi-outlet assemblies red.

3. Use visibly red receptacles and devices. Alternately engrave plates 'EMERGENCY SYSTEM" and fill in with red enamel.

G. Conduit and Conductors:

1. Tag feeders at panels, switchboards, pull boxes, and other accessible enclosures, indicating source, voltage, circuit number and conductor ampere rating. Tags to be readily readable after installation.

2. In exterior or wet locations, provide metal or laminated plastic discs as above attached with nylon cord.

3. In interior dry locations, provide metal or laminated plastic discs as above, attached with nylon cord.

4. Tag exposed ends of conduit stubs indicating system, name of panel, switchboard, etc., of origin and conduit size.

5. Identify all branch circuit system conductors with premarked, self-adhesive, wraparound cloth wire markers, indicating circuit number and name of panel, cabinet, etc., of origin, at panelboards, motor centers, switchboards, terminal cabinets, wireways, junction boxes and at outlet boxes containing more than one neutral wire.

6. Identification Format Examples:

a.	Switchboard Feeder	-	SAA-1 480/277V-225A
b.	Transformer Subfeeder	-	3ETA-1 208/120V-380A
c.	Transfer Switch Subfeeder	-	3ATS-1 480V-800A
d.	Panel AA Branch Circuit	-	AA-10
e.	Motor Control Center Circuit	-	MCCA-4 480V

7. Provide, above underground conduits stubbed for future use, engraved flush bronze marker anchored in 4" square by 12" deep concrete block, flush with grade, indicating system, conduit size and point of origin.

H. Devices: Engrave on each device plate with 3/16" high block letters filled with black enamel where noted and as follows:

1. Lock switch and switch with pilot light - device controlled.

2. Switch for fan, motor, unit heater - equipment controlled.

3. Switch where lights or equipment are out of sight - equipment controlled.

4. Switches in gangs of three or more - description of lights or equipment switched.

5. Receptacles over 150V to ground and/or 30A and higher rating - voltage and ampere rating.

6. Isolated ground Receptacles - "Isolated Ground".

7. Where wording is not indicated, allow for ten letters per device and use wording as directed.

I. Warning Signs: Conform with the latest edition of NEC. Provide 18 gauge steel, white porcelain enameled signs with 1" high black letters in all electrical and communication rooms and closets reading ELECTRICAL (or SIGNAL) ROOM- NO STORAGE PERMITTED.

J. Panel Schedules: Provide typewritten panel schedules on inside of panel doors behind clear plastic. Indicate as-built number and type of outlets served and general location of outlets or fixtures and/or item of equipment served. Where modifying existing panels, provide new typewritten schedules reflecting modifications provided under this work.

3.38 TEST AND CERTIFICATION

A. General: Provide testing in accordance with NETA requirements, as specified under individual equipment and system specifications and as follows:

1. Upon completion of the work, and as a condition for acceptance, test all components and systems in the presence of the Owner's representative to demonstrate compliance with the specifications. Provide tests as specified and as required by the code or enforcing authorities. Adjust, repair and/or replace defective material and equipment.

2. Provide supervisory personnel experienced with the particular systems involved, and where specified, arrange for the presence of factory representatives to direct indicated testing. Check all field connections prior to testing.

3. Provide all required testing instruments and pay all costs for testing and for any resulting repair or replacement.

4. Tighten all bolted connections and meggar all equipment and bus prior to testing.

5. Tabulate all test data and prepare certified typewritten report covering all testing performed and include in Operating and Maintenance Instruction Manual(s).

B. Test and Measurements: Include all required factory service engineering time to cover the outline testing. Submit a per diem cost to cover additional testing which may be requested.

C. Ground Resistance: Test ground resistance at service, substation, generator, and at the secondary of each transformer, sized 75 KVA and larger. Perform test in accordance with the latest edition of James G. Biddle manual on "Earth Resistance Testing" and describe tests and results in test report. Where ground resistance is in excess of specified values, add ground electrodes as required to meet specifications. Perform tests before associated slabs are poured so that corrective measures are not precluded.

D. Switchboards:

1. For each building service switchboard and switchboard served from separately derived systems (generator, transformer) isolate neutral bus from ground by removing neutral bus from ground by removing neutral bus link and test neutral bus for infinite resistance. It may be necessary to disconnect DC inverters. Correct all unintentional neutral grounding and repeat test until infinite resistance is obtained. Submit test report. Reinstall bus links.

2. Set, test and operate each operable device.

E. For motors served from motor starters provide under this section, provide certified listing of nameplate motor data along with overloads provided in associated starters. Replace overloads as required for code compliance. Include list in Operating and Maintenance Instruction Manual.

F. Ground Fault Detectors: Verify proper neutral grounding and installation of ground fault detector. In zero sequence system, neutral and phase conductors to pass through sensor in same direction and equipment ground to be outside sensor. Test operation of each detector using factory authorized test equipment.

G. Metering: Demonstrate operation and set zero adjustment.

H. Conductors: Test for continuity, proper neutral connection, short circuit and improper ground. Meggar all feeders with switchboards and/or panels connected, but with branch loads disconnected, and meggar circuits for 20 HP and larger motors. Insulation resistance to be not less than cable manufacturer's recommendation.

I. Panelboards: Test with main disconnect open, branch circuits connected, wall switches closed, lighting fixtures and/or outlets permanently connected, without lamps, for neutral ground, short circuit, continuity, improper ground, and multiple neutral grounds.

J. Signal and Communication Systems: Factory engineer to test each system to demonstrate specified operation of all components. For code required systems arrange for code authorities to witness test.

K. Receptacles:

1. Verify that all receptacles are installed per manufacturer's instructions and terminal connections are secure and clean. Test for polarity.

2. With the Aid of a GFI Tester, Such as Hubbell #GFT2-G, Test GFI Receptacles:

a. Hot - neutral - ground connections.

b. At two and three milliamps respectively, GFI shall not trip within 10 seconds.

c. At five milliamps, GFI shall trip within one second.

3. Test isolated ground receptacles for ground isolation.

L. Perform fluorescent troffer tests prior to installation.

M. Adjustments: After project loads are in full operation, and at a time acceptable to the Owner:

1. Take voltage readings at each transformer. Where voltage on secondary of building transformers is above or below required rating in excess of 2½ percent at full load, make appropriate tap changes.

2. Take current readings on each phase at each panel. Adjust branch circuiting between phases where required to balance phase currents within 10 percent. Reflect revisions in panel schedules. Circuit revisions shall not compromise multi-wire circuits sharing a common neutral.

3. Tabulate adjustment data by transformer and panel and submit with test data.

N. Thermographic Inspection:

1. After project loads are in full operation, perform a thermographic inspection of the electrical equipment and connections at a time acceptable to the Owner and in the presence of his authorized representative.

2. The inspection is to locate high resistive points by comparing temperature levels to reference temperatures.

3. Utilize an infrared camera with a range of -20°C to 900°C and an accuracy of 0.1°C. Equip camera with a minimum of three lenses: 7° telephoto, 20° wide angle and 4° extra wide angle. Utilize camera to detect infrared wave lengths and convert them into video signals projected onto a monitor screen in the form of a line thermal image to be photographed for inclusion in the report. Heat loss survey to be in both gray step mode and color.

4. Inspect the entire electrical system including:

   a. Transformers.

   b. Switchboard, panelboards.

   c. Circuit breakers, disconnect switches.

   d. Automatic transfer switches.

5. Include in test report thermographs and photographs of defective equipment and connections. Outline probable cause, severity of defect and corrective measure recommendations.

6. Correct deficiencies as agreed upon at no cost to owner. Rephotograph corrected areas and resubmit data indicating satisfactory condition.

END OF SECTION

OVERCURRENT PROTECTIVE DEVICE COORDINATION STUDY AND ARC FLASH HAZARD ANALYSIS

SECTION 260573

PART 1 - GENERAL

1.1 SUMMARY

A. This Section includes computer-based, fault-current and overcurrent protective device coordination studies and arc flash hazard analysis. Protective devices shall be set based on results of the protective device coordination study.

1. Coordination of series-rated devices is permitted where indicated on Drawings.

1.2 ACTION SUBMITTALS

A. Product Data: For computer software program to be used for studies.

B. Other Action Submittals: The following submittals shall be made after the approval process for system protective devices has been completed. Submittals shall be in digital form.

1. Coordination-study input data, including completed computer program input data sheets.

2. Study and Equipment Evaluation Reports.

3. Coordination-Study Report.

4. Arc-flash hazard analysis.

1.3 INFORMATIONAL SUBMITTALS

A. Qualification Data: For coordination-study specialist.

B. Product Certificates: For coordination and fault current-study and arc flash hazard analysis computer software programs, certifying compliance with IEEE 399 and IEEE 1584.

1.4 QUALITY ASSURANCE

A. Studies shall use computer programs that are distributed nationally and are in wide use. Software algorithms shall comply with requirements of standards and guides specified in this Section. Manual calculations are not acceptable.

B. Coordination-Study Specialist Qualifications: An entity experienced in the application of computer software used for studies, having performed successful studies of similar magnitude on electrical distribution systems using similar devices.

1. Professional engineer, licensed in the state where Project is located, shall be responsible for the study. All elements of the study shall be performed under the direct supervision and control of engineer.

C. Comply with IEEE 242 for short-circuit currents and coordination time intervals.

D. Comply with IEEE 399 for general study procedures.

E. Comply with IEEE 1584 and NEC 70E for arc flash hazard analysis.

F. Comply with the latest OSHA (Occupational Safety and Health Administration) electrical requirements.

PART 2 - PRODUCTS

2.1 COMPUTER SOFTWARE DEVELOPERS

A. Computer Software Developers: Subject to compliance with requirements, provide products by one of the following:

1. CGI CYME.

2. EDSA Micro Corporation.

3. ESA Inc.

4. Operation Technology, Inc.

5. SKM Systems Analysis, Inc.

2.2 COMPUTER SOFTWARE PROGRAM REQUIREMENTS

A. Comply with IEEE 399.

B. Analytical features of fault-current-study computer software program shall include "mandatory," "very desirable," and "desirable" features as listed in IEEE 399.

C. Computer software program shall be capable of plotting and diagramming time-current-characteristic curves as part of its output. Computer software program shall report device settings and ratings of all overcurrent protective devices and shall demonstrate selective coordination by computer-generated, time-current coordination plots.

PART 3 - EXECUTION

3.1 POWER SYSTEM DATA

A. Gather and tabulate the following input data to support coordination study:

1. Product Data for overcurrent protective devices specified in other Division 26 Sections and involved in overcurrent protective device coordination studies. Use equipment designation tags that are consistent with electrical distribution system diagrams, overcurrent protective device submittals, input and output data, and recommended device settings.

2. Impedance of utility service entrance.

3. Electrical Distribution System Diagram: In hard-copy and electronic-copy formats, showing the following:

   a. Circuit-breaker and fuse-current ratings and types.
   b. Relays and associated power and current transformer ratings and ratios.
   c. Transformer kilovolt amperes, primary and secondary voltages, connection type, impedance, and X/R ratios.
   d. Generator kilovolt amperes, size, voltage, and source impedance.
   e. Cables: Indicate conduit material, sizes of conductors, conductor material, insulation, and length.
   f. Motor horsepower and code letter designation according to NEMA MG 1.

4. Data sheets to supplement electrical distribution system diagram, cross-referenced with tag numbers on diagram, showing the following:

   a. Special load considerations, including starting inrush currents and frequent starting and stopping.
   b. Transformer characteristics, including primary protective device, magnetic inrush current, and overload capability.
   c. Motor full-load current, locked rotor current, service factor, starting time, type of start, and thermal-damage curve.
   d. Generator thermal-damage curve.
   e. Ratings, types, and settings of utility company's overcurrent protective devices.
   f. Special overcurrent protective device settings or types stipulated by utility company.
   g. Time-current-characteristic curves of devices indicated to be coordinated.
   h. Manufacturer, frame size, interrupting rating in amperes rms symmetrical, ampere or current sensor rating, long-time adjustment range, short-time adjustment range, and instantaneous adjustment range for circuit breakers.
   i. Manufacturer and type, ampere-tap adjustment range, time-delay adjustment range, instantaneous attachment adjustment range, and current transformer ratio for overcurrent relays.
   j. Panelboards, switchboards and interrupting rating in amperes rms symmetrical.

3.2 FAULT-CURRENT STUDY

A. Calculate the maximum available short-circuit current in amperes rms symmetrical at circuit-breaker positions of the electrical power distribution system. The calculation shall be for a current immediately after initiation and for a three-phase bolted short circuit at each of the following:

   1. Switchboard bus.

   2. Distribution panelboard.

   3. Branch circuit panelboard.

B. Study electrical distribution system from normal and alternate power sources throughout electrical distribution system for Project. Include studies of system-switching configurations and alternate operations that could result in maximum fault conditions.

C. Calculate momentary and interrupting duties on the basis of maximum available fault current.

D. Calculations to verify interrupting ratings of overcurrent protective devices shall comply with IEEE 241 and IEEE 242.

1. Transformers:

   a. ANSI C57.12.22.
   b. IEEE C57.12.00.
   c. IEEE C57.96.

2. Low-Voltage Circuit Breakers: IEEE 1015 and IEEE C37.20.1.

3. Low-Voltage Fuses: IEEE C37.46.

E. Study Report:

1. Show calculated X/R ratios and equipment interrupting rating (1/2-cycle) fault currents on electrical distribution system diagram.

F. Equipment Evaluation Report:

1. For 600-V overcurrent protective devices, ensure that interrupting ratings are equal to or higher than calculated 1/2-cycle symmetrical fault current.

2. For devices and equipment rated for asymmetrical fault current, apply multiplication factors listed in the standards to 1/2-cycle symmetrical fault current.

3. Verify adequacy of phase conductors at maximum three-phase bolted fault currents; verify adequacy of equipment grounding conductors and grounding electrode conductors at maximum ground-fault currents. Ensure that short-circuit withstand ratings are equal to or higher than calculated 1/2-cycle symmetrical fault current.

3.3 COORDINATION STUDY

A. Perform coordination study using approved computer software program. Prepare a written report using results of fault-current study. Comply with IEEE 399.

1. Calculate the maximum and minimum 1/2-cycle short-circuit currents.

2. Calculate the maximum and minimum interrupting duty (5 cycles to 2 seconds) short-circuit currents.

3. Calculate the maximum and minimum ground-fault currents.

B. Comply with IEEE 241 recommendations for fault currents and time intervals.

C. Transformer Primary Overcurrent Protective Devices:

1. Device shall not operate in response to the following:

   a. Inrush current when first energized.
   b. Self-cooled, full-load current or forced-air-cooled, full-load current, whichever is specified for that transformer.
   c. Permissible transformer overloads according to IEEE C57.96 if required by unusual loading or emergency conditions.

2. Device settings shall protect transformers according to IEEE C57.12.00, for fault currents.

D. Conductor Protection: Protect cables against damage from fault currents according to ICEA P-32-382, ICEA P-45-482, and conductor melting curves in IEEE 242. Demonstrate that

equipment withstands the maximum short-circuit current for a time equivalent to the tripping time of the primary relay protection or total clearing time of the fuse. To determine temperatures that damage insulation, use curves from cable manufacturers or from listed standards indicating conductor size and short-circuit current.

E. Coordination-Study Report: Prepare a written report indicating the following results of coordination study:

1. Tabular Format of Settings Selected for Overcurrent Protective Devices:

   a. Device tag.
   b. Relay-current transformer ratios; and tap, time-dial, and instantaneous-pickup values.
   c. Circuit-breaker sensor rating; and long-time, short-time, and instantaneous settings.
   d. Fuse-current rating and type.
   e. Ground-fault relay-pickup and time-delay settings.

2. Coordination Curves: Prepared to determine settings of overcurrent protective devices to achieve selective coordination. Graphically illustrate that adequate time separation exists between devices installed in series, including power utility company's upstream devices. Prepare separate sets of curves for the switching schemes and for emergency periods where the power source is local generation. Show the following information:

   a. Device tag.
   b. Voltage and current ratio for curves.
   c. Three-phase and single-phase damage points for each transformer.
   d. No damage, melting, and clearing curves for fuses.
   e. Cable damage curves.
   f. Transformer inrush points.
   g. Maximum fault-current cutoff point.

F. Completed data sheets for setting of overcurrent protective devices.

3.4 ARC FLASH HAZARD ANALYSIS

A. The arc flash hazard analysis shall be performed according to the IEEE 1584 equations that are presented in the NFPA70E- 2004 annex D.

B. The flash protection boundary and incident energy shall be calculated at all significant locations in the electrical distribution system, (switchboards, panelboards and splitters) where work could be performed on energized parts.

C. The Arc-Flash Hazard analysis shall include all significant locations in 240 volt and 208 volt systems fed from transformers equal to or greater than 125 kVA where work could be performed on energized parts.

D. Safe working distances shall be based upon the calculated flash boundary considering an incident energy of 1.2 cal/cm².

E. When appropriate, the short circuit calculations and the clearing times of the phase overcurrent devices will be retrieved from the short-circuit and coordination study model. Ground overcurrent relays should not be taken into consideration when determining the clearing time when performing incident energy calculations.

F. The short-circuit calculations and the corresponding incident energy calculations for multiple system scenarios must be compared and the greatest incident energy must be uniquely reported for each equipment location. Calculations must be performed to represent the maximum and minimum contributions of fault current magnitude for all normal and emergency operating conditions. The minimum calculation will assume that the utility contribution is at a minimum and will assume a minimum motor contribution (all motors off). Conversely, the maximum calculation will assume the maximum contribution from the utility and will assume the maximum amount of motors to be operating. Calculations shall take into consideration the parallel operation of synchronous generators with the electric utility where applicable.

G. The incident energy calculation must consider the accumulation of energy over time when performing arc flash calculations on buses with multiple sources. Iterative calculations must take into account the changing current contributions, as the sources are interrupted or decremented with time. Fault contribution from motors and generators should be decremented as follows:

1. Fault contribution from induction motor should not be considered beyond 3-5 cycles.

2. Fault contribution from synchronous motors and generators should be decayed to match the actual decrement of each as closely as possible (e.g. contributions from permanent magnet generators will typically decay from 10 per unit to 3 per unit after 10 cycles).

H. For each equipment location with a separately enclosed main device (where there is adequate separation between the line side terminals and the main protective device and the work location), calculations for incident energy and flash protection boundary shall include both the line and load side of the main breaker.

I. When performing incident energy calculations on the line side of a main breaker (as required per above), the line side and load side contributions must be included in the fault calculation.

J. Mis-coordination should be checked amongst all devices within the branch containing the immediate protective device upstream of the calculation location and the calculation should utilize the fastest device to compute in incident energy for the corresponding location.

K. Arc Flash calculations shall be based on actual overcurrent protective device clearing time. Maximum clearing time will be capped at 2 seconds based on IEEE 1584-2002 section B.1.2 where it is not physically possible to move outside of the flash protection boundary in less than 2 seconds during an arc flash event, a maximum clearing time based on the specific location shall be utilized.

3.5 ARC FLASH WARNING LABELS

A. The contractor of the Arc Flash Hazard Analysis shall provide a 3.5 in.x 5 in. thermal transfer type label of high adhesion polyester for each work location analyzed.

B. All labels will be based on recommended overcurrent device settings and will be provided after the results of the analysis have been presented to the owner and after any system changes, upgrades or modifications have been incorporated into the system.

C. The label shall include the following information, at a minimum:

1. Location designation

2. Nominal voltage

3. Flash protection boundary

4. Hazard risk category

5. Incident energy

6. Working distance

7. Engineering report number, revision number and issue date

D. Labels shall be machine printed, with no field markings.

E. Arc flash labels shall be provided in the following manner and all labels shall be based on the recommended overcurrent device settings.

1. For each 600, 480 and applicable 208 volt panelboard, one arc flash label shall be provided.
2. For each low voltage switchboard, one arc flash label shall be provided.

F. Labels shall be field installed by the engineering service division of the equipment manufacturer under the Startup and Acceptance Testing contract portion.

END OF SECTION

STRUCTURAL EXCAVATION AND BACKFILL

SECTION 312316

1. GENERAL CONDITIONS AND SPECIAL CONDITIONS

The General Conditions and Special Conditions are a part of this Section and the Contract for this work. They apply to this Section as fully as if repeated here.

1.1 SCOPE

Furnish all labor, materials, service, equipment and appliances required to perform all earth work for structures, including excavation, fill, backfill, compaction and rough grading work indicated on the drawings and/or specified herein, including but necessarily limited to the following:

A. Excavation, fill, backfill and compaction for foundations as required to conform to the requirements of the Construction Documents and Soils Report. Testing and Inspection of soils shall be paid for by the Owner.

B. Subgrade preparation for foundation work, as required.

C. Maintenance of excavations, including shoring, sheeting and all other necessary lateral support for foundation work, as required.

D. Abandoned underground utility lines should be removed to comply with local jurisdictional requirements when lines interfere with foundation work.

E. Removal and disposal of hazardous materials if encountered shall comply with local jurisdictional requirements for such work, but shall be paid for by the Owner.

1.2 RELATED WORK ON OTHER SECTIONS

A. Excavation and backfill for underground utilities: See Divisions 21, 22, 26, 33.

B. Subdrain: See Civil Drawings.

1.3 WORK NOT INCLUDED

A. Landscaping and top soil fill.

B. Inspection and testing of earth work as required by Soils Engineer.

B. Soil preparation, conditioning, rough and fine grading work, beyond line or face of parking structure, or foundations where extending beyond face of parking structure.

C. Initial grading of site.

2. MATERIALS

2.1 MATERIAL FOR FILL

A. Any required imported fill for addressing conditions outside the scope of the contract shall consist of relatively non-expansive soils. The expansion index of any import material shall be less than 35. The imported material shall contain sufficient fines (binder) so as to be relatively impermeable when compacted.

B. The on-site soils, less any debris or organic matter, may be used in required fills (if approved by the soils engineer, see 2.1.C), but may not be used for backfill in utility trenches in any case.

C. All material for fill, whether imported or conditioned on-site material must receive approval for use by the Soils Engineer. Fill material must be approved by the Soils Engineer prior to importing.

3. EXECUTION

3.1 VERIFICATION OF EXISTING CONDITIONS

A complete copy of the Report of Geotechnical Investigation Report, are available for reference at the project office of the Contractor.

A. The sub-contractor will be held to have ascertained conditions at the site by inspection, observed for himself the character and extent of existing work within the Contract limits or adjacent thereto, and other work performed prior to start of work specified herein.

B. Recommendations made in the referenced "Geotechnical Investigation" Reports shall be part of this specification.

3.2 LAYOUT OF WORK

A. The General Contractor's surveyor shall layout and establish only horizontal and vertical control points. The sub-contractor shall use the Owner established points and provide all construction staking.

B. The sub-contractor shall be responsible for field verifying all existing conditions, including all existing and proposed grade elevations within or adjacent to the parking structure. Sub-contractor to field verify all existing utility locations shown on the drawings as well as existing basement walls, foundations, and other substructures within the parking structure.

C. Make use of such methods of work as are best adapted to preserve the safety and stability of and to prevent damage to:

1. The public streets, existing utilities, telephone conduits, electrical lines, sewers, water, gas lines, etc., in and around property.

2. Adjacent property.

D. Comply with all requirements of the local jurisdiction, County and the State of California agencies having jurisdiction over such work.

3.3 LEGAL REQUIREMENTS

A. Give adequate and required legal notice to the Owner, utility organizations and governing authorities prior to commencing work.

B. Provide such barricades, temporary fences, lights, warning signs, guards, etc., as may be necessary to assure safety and to deter trespassers. Maintain these

provisions during entire duration of work. Temporary facilities shall be constructed, painted and maintained in strict conformance with requirements of code and other governing authorities.

C. Coordinate operations with other trades, utility firms and other affected public departments to assure continuity of both access and service of utility, service, distribution lines, in conformance with applicable requirements of these organizations. Owner shall pay for all permits required for work under this section.

3.4 DUST PALLIATION

Palliate dust conditions during all operations under this Section. Comply with all directions issued by air pollution control agencies having jurisdiction over work.

3.5 PROTECTION

A. Should active, inactive or abandoned sewers, gas, water piping, electrical telephone lines, or other underground utilities be encountered which interfere with the work, protect and remove per the local jurisdiction. Protection, removal and/or discontinuance of utility services shall conform to the requirements of the Utility Companies or service agencies having jurisdiction. Contractor shall be responsible for notifying them in advance or immediately upon encountering any unrecorded services.

B. Shoring: Provide necessary shoring to safe-guard work, workmen, and the public property and assume all responsibility in connection therewith. Include provision for cribbing, planking, sheeting, walling or other work of whatever nature may be necessary to properly retain earth banks, and prevent caving-in and displacement of adjoining soil. Conform to California State Construction and General Industrial Safety Orders, OSHA requirements and Construction Safety Act. Obtain permits as required, including Industrial Safety Permit and all inspections required by governing agencies. Provide shoring plans with calculations by a Registered Structural Engineer.

C. Submit for review the method of compaction to be used, or submit proposed plan.

D. Before commencing any excavation work, verify and locate all existing underground utility lines on site, including the depths below grade. Verify that existing utilities do not interfere with construction. Where site utilities conflict with new construction, notify the Architect.

E. Differential Settling: For areas where utilities must cross over or through compacted fill or compacted backfill or where entering building, plan earthwork operation to allow sufficient time for the settling to take place or provide flexible or swing joints to allow for vertical displacement. Use settlement markers to determine when consolidation has ceased.

F. During construction the Contractor shall properly grade all excavated surfaces to provide positive drainage and prevent ponding of water. He shall control surface water to avoid damage to adjoining properties or to finished work on the site. The Contractor shall take remedial measures to prevent erosion of freshly graded areas and until such time as permanent drainage and erosion control features have been installed.

3.6 EXCAVATION

A. General: Perform excavation for foundations to the dimensions and elevations indicated on drawings. Excavate all materials regardless of their nature. Extend excavation sufficient distance from foundation to allow for form installation, inspection, and backfill compaction unless Soils Engineer authorizes concrete deposit directly against excavated earth surfaces.

1. To verify the presence of adequate bearing materials, at the footing design elevations, all footing excavations shall be observed by the Soils Engineer. The footing excavations (bottoms) shall be cleaned of any loose soil before placing the concrete.

B. Asphaltic Paving: Remove all existing fill materials and disturbed natural or unsuitable soils. Replace with properly compacted fill. Excavated soils that are free of expansive clay, debris and organic matter may be stockpiled for recompaction, subject to the approval of the Soils Engineer. After excavation scarify exposed soils to a depth of approximately 6 inches, moistened or dried as necessary to within 2 percent of the optimum moisture contents. Place approved fill for compaction to the proposed final subgrade elevations for asphaltic paving support. Compact fill to at least 90 percent of the maximum obtainable, by the ASTM D1557-78 method of compaction.

C. Final Subgrade Preparation: Bring final subgrades for paving to proper elevation by excavating, filling and compacting as herein specified. Finish within a 3/8" tolerance when measured along a 10-foot straight edge in any direction.

3.7 PLACING, SPREADING AND COMPACTING FILL MATERIAL

A. Place fill materials in loose lifts not exceeding 8" and compact. Spread each layer evenly and thoroughly mix during the spreading to insure uniformity of material in each layer.

B. Bring moisture content of fill material to within two percent of optimum moisture content.

C. Compact each layer as required under Article 3.06 B. Use power equipment capable of achieving specified density and accomplish while the fill material is at the required moisture content. Compact each layer over its area until the density has been obtained.

D. Field density tests for compaction of fill will be made by the Soils Engineer as required. Where compaction equipment has disturbed the surface to a depth of several inches, density tests will be taken in the compacted material below the disturbed surface. Do not spread additional layers of fill until the field density tests indicate that specified density has been obtained.

E. Do not backfill and compact behind walls until walls are braced by the completion of wall and support systems and both walls and support systems have reached design strength.

F. Mechanically compact backfill in layers. Flooding is not permitted. Compact backfill to at least 90 percent of the maximum density obtainable by the ASTM D1557-70 method of compaction.

G. Protect structure below grade at all times during backfilling operations.

3.8 INSPECTIONS AND TESTING

A. Inspection: Inspection and testing by the Soils Engineer will be provided during all excavation, grading, filling and compacting operations. Give at least 72 hours notice prior to beginning of such operations to allow proper scheduling of work.

B. All testing and inspection will be paid for by the Owner.

C. Retesting: Contractor to pay all costs for retesting required as the result of the density test failures due to improper placement and all additional costs for inspection required as a result of correcting defective work.

D. Replacing: Where earthwork is performed without the required observation by the Soils Engineer, Contractor shall uncover and replace such work at no additional cost to the Owner if the Soils Engineer determines that such work does not meet requirements of these Specifications and of the Soils Report.

E. Responsibility: Inspection by Soils Engineer does not relieve the Contractor of responsibility for construction of compacted fills to comply with this specification.

3.9 CLEAN-UP

Upon completion of work of this Section, remove from site excess dirt, rubbish, trash and debris resulting from the operation. Remove equipment and implements of service, leaving the entire areas involved in a neat, clean and acceptable condition.

END OF SECTION

PARKING BUMPERS

SECTION 311713

1. GENERAL CONDITIONS AND SPECIAL CONDITIONS

The General Conditions and Special Conditions are a part of this Section and the contract for this work. They apply to this section as fully as if repeated here.

1.1 SUBMITTALS

A. General: Submit in accordance with General Conditions.

B. Product Data: Submit product data for precast concrete parking barriers and adhesive setting method.

2. PRODUCTS

2.1 MATERIALS

A. Parking Bumpers: Precast concrete, manufacturer's standard cross-section, rectangular with chamfered edges or semi-circular, 6 feet minimum length section, reinforced with two continuous 3/8 inch diameter deformed bars, ASTM C615.

1. Exposed Surface: Factory cast finish.
2. Concrete Minimum Compressive Strength: 4,000 PSI at 28 days.
3. Drainage: Through base drainage slots.
4. Setting: Fabricate to receive two setting pins located approximately 12 inches from each end.

B. Adhesive: Conform to local highway department specifications for epoxy adhesive, and as recommended by barrier manufacturer for concrete substrate.

3. EXECUTION

3.1 EXAMINATION

A. Examine conditions and verify that paving and pavement marking is completed and ready for installation of parking bumpers.

3.2 PREPARATION

A. Clean surfaces to receive adhesively applied barriers.

B. Buff, grind, sandblast or use other acceptable methods to clean pavement surfaces free of dirt, curing compound, grease, oil, moisture, loose, unsound pavement and other material which would adversely affect bond of adhesive.

3.3 INSTALLATION

A. Parking Bumpers: Install in accordance with manufacturer's recommendations and written instructions.

1. Coordinate installation of parking bumpers with pavement marking layout.

2. Install parking bumper at each parking stall location where indicated, perpendicular with and centered between side stripes. Set bumpers straight and aligned if in continuous rows.

B. Adhesive Application: Attach parking barriers on paved surfaces with two 5 inch diameter spots of epoxy adhesive for each parking barrier.

1. Apply wet epoxy so that 100 percent of bonding areas are in contact with barriers and of sufficient thickness over entire diameter of each adhesive spot.

C. When project is complete, ensure barriers are firmly attached to pavement.

3.4 CLEANING

A. General: Clean excess adhesive off parking barriers and paved surfaces.

END OF SECTION

PAVEMENT MARKINGS

SECTION 321723

1. GENERAL CONDITIONS AND SPECIAL CONDITIONS

The General Conditions and Special Conditions are a part of this Section and the contract for this work. They apply to this section as fully as if repeated here.

1.1 QUALITY ASSURANCE

A. Manufacturer: Company specializing in manufacturing quality paint products with three years minimum experience.

B. Applicator: Company specializing in commercial parking lot painting with three years minimum experience.

C. Regulatory Requirements:

1. Conform to 2010 CBC Chapter 11A Accessibility and Federal Accessibility Guidelines for Buildings and Facilities (ADAAG) if more stringent requirements are applicable for installing work for accessibility to handicapped.

1.2 DELIVERY, STORAGE, AND HANDLING

A. Comply with requirements of General Conditions.

1. Delivery: Deliver products to site in sealed and labeled containers.

a. Container labels to include manufacturer's name, type of paint, brand name, brand code, coverage, surface preparation, drying time, cleanup, color, designation, and instructions for mixing and reducing.

2. Storage: Store paint materials in well ventilated area at minimum ambient temperature of 45 degrees F and maximum of 90 degrees F.

a. Take precautionary measures to prevent fire hazards from spontaneous combustion.

1.3 PROJECT CONDITIONS

A. Environmental Requirements: Apply marking when surfaces are thoroughly dry and air temperature is above 40 degrees F.

2. PRODUCTS

2.1 MANUFACTURERS

A. Acceptable Manufacturers:

1. ICI-Devo, Louisville, KY.
2. Kelly-Moore, San Carlos, CA.

3. Pittsburgh Paints, Pittsburgh, PA.
4. Pratt and Lambert, Chicago, IL.
5. Sherwin Williams, Cleveland, OH.

2.2 MATERIALS

A. Highway Traffic Paint: Water-based acrylic compound. Comply with minimum requirements of EPA regulations for VOC content with FS TT-P-1952B for performance.

1. Colors: White, Red, and Blue.

B. Acceptable Products:

1. 850XX Traffic Line Paint, Devoe.
2. 1450 Traffic Line Finish, Kelly-Moore.
3. Setfast Acrylic Traffic Marking Paint, Sherwin Williams.
4. Accepted Substitute in accordance with Section 01600.

3. EXECUTION

3.1 EXAMINATION

A. Examine conditions and proceed with Work in accordance with General Conditions.

1. Ensure concrete paving has cured for 30 days minimum prior to application of pavement marking.

3.2 PREPARATION

A. Clean surface of scale, dirt, mud, sand, gravel, oil, grease and other foreign material.

B. Lay out markings using guide lines, templates and forms as necessary.

1. Mask adjacent surfaces if necessary to protect against overspray.

C. Apply primer, if recommended by manufacturer, to areas to receive marking paint to ensure durable installation.

3.3 PAVEMENT MARKING APPLICATION

A. Parking Stall Stripping: Apply 4 inch wide strips with atomizing type marking machine or spray gun at rate of 15 mils wet film thickness:

1. Color: White.

B. Accessible Parking Stalls and Van Accessible Parking Stalls: Provide Accessible Parking Marking:

1. Stencil ACCESSIBLE PARKING SPACE on curb in 4 inch high white block letters on blue background 6 inch high and of appropriate length for lettering background as indicated.

2. Provide blue international symbol of accessibility in center of parking stall.

C. Accessible Aisle Marking:

1. Apply 4 inch wide strips with atomizing type marking machine or spray gun at rate of 15 mils wet film thickness. Include border strip around total area and diagonal strips at 16 inches on center within border.

2. Color: Blue

D. Fire Lane – No Parking Marking: Stencil FIRE LANE – NO PARKING in 4 inch high white block letters on red background 6 inches high and of appropriate length for lettering background at intervals not closer than 25 feet and not farther apart than 50 feet on curbs and pavement throughout length of Fire Lane as indicated.

E. Crosswalks at P-1 and P-2:

1. Apply 4 inch wide strips with atomizing type marking machine or spray gun at rate of 15 mils wet film thickness. Include border strip around total area and diagonal strips at 16 inches on center within border.

2. Color: Reflective white or yellow

3.4 ADJUSTING AND CLEANING

A. Adjusting: Repair or replace damaged painting, as requested by Architect, at no additional cost to Owner.

B. Cleaning: Clean soil or damaged areas not scheduled to receive painting.

3.5 PROTECTION

A. Protect finished work in accordance with General Conditions.

1. Provide barriers to prevent vehicles from entering areas being painted.
2. Maintain barriers until paint is thoroughly dry.

END OF SECTION