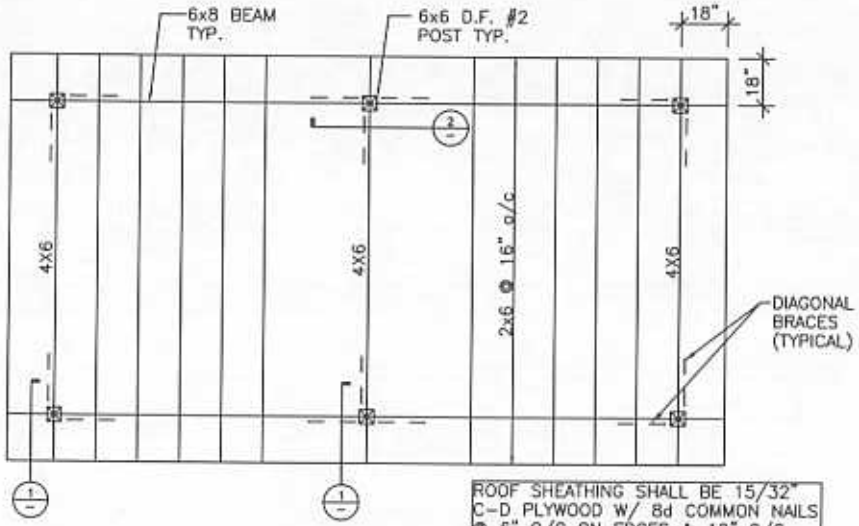

ROOF SHEATHING SHALL BE 15/32" C-D PLYWOOD W/ 8d COMMON NAILS @ 6" O/C ON EDGES & 12" O/C IN THE FIELD

ROOF FRAMING PLAN

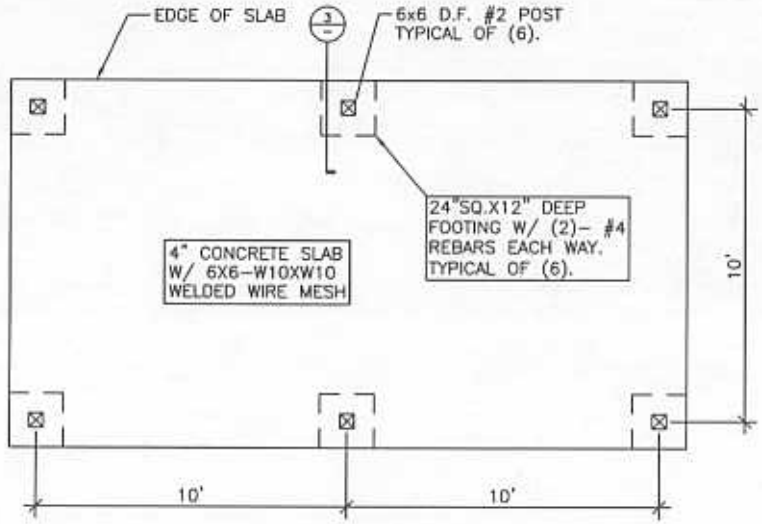

FOUNDATION PLAN

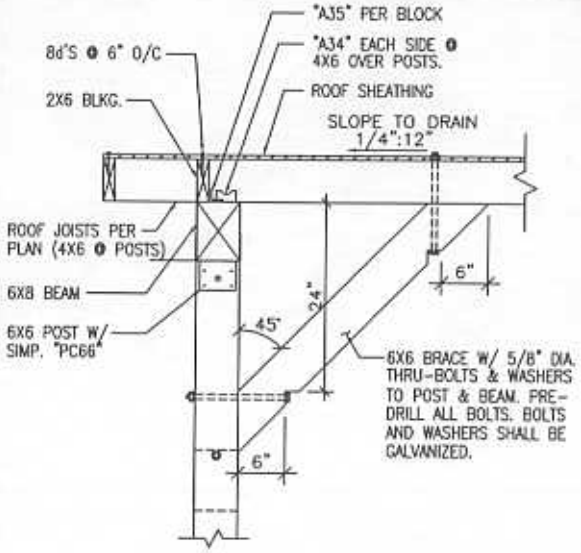

TYPICAL AT ALL POSTS (BEAM END VIEW)

1

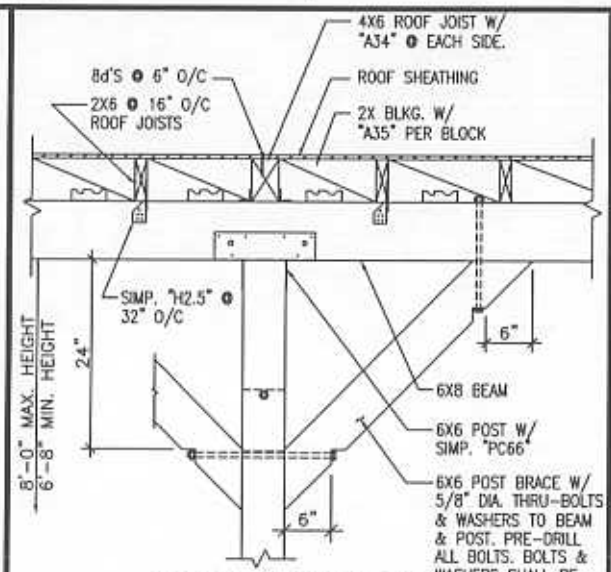

TYPICAL BRACE DETAIL (BEAM FACE VIEW)

2

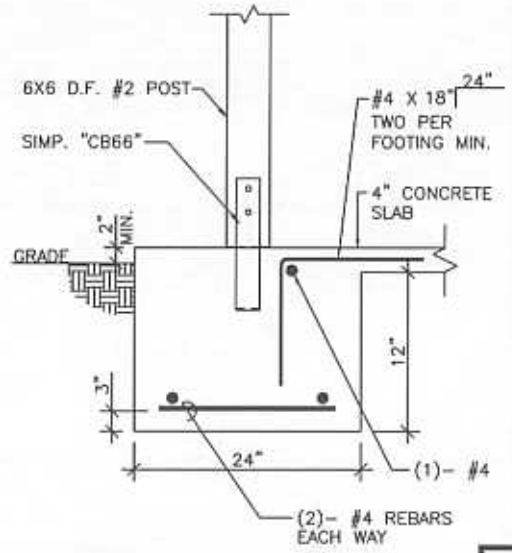

CONNECTION AT FOUNDATION

3

CITY OF RIVERSIDE

BUILDING & SAFETY DIVISION

STANDARD STRUCTURAL CARPORT PLANS

SCALE	NONE
BK DRAWN	08/2003 DATE

REV.	DATE	APPR.
1		
2		
3		
4		
5		

CARPORT PLANS

RSD-5.0

SHEET