1. 4X POST
2. 4X FULL HEIGHT KING STUD W/ PLYWOOD EDGE NAILING
3. 4X BLOCKING
4. "CMST14" FULL LENGTH STRAP PLACED OVER PLYWD. SHEATHING.
5. SILL PLATE
6. 2- 2X TOP PLATES
7. 2X TRIMMER STUD
8. HEADER/ PLAN
9. "HPAHD22-2P" U.N.O.
10. BRACED PANELS W/ EDGE NAILING PER DETAIL "B"
11. 2- 2X SILL PLATE

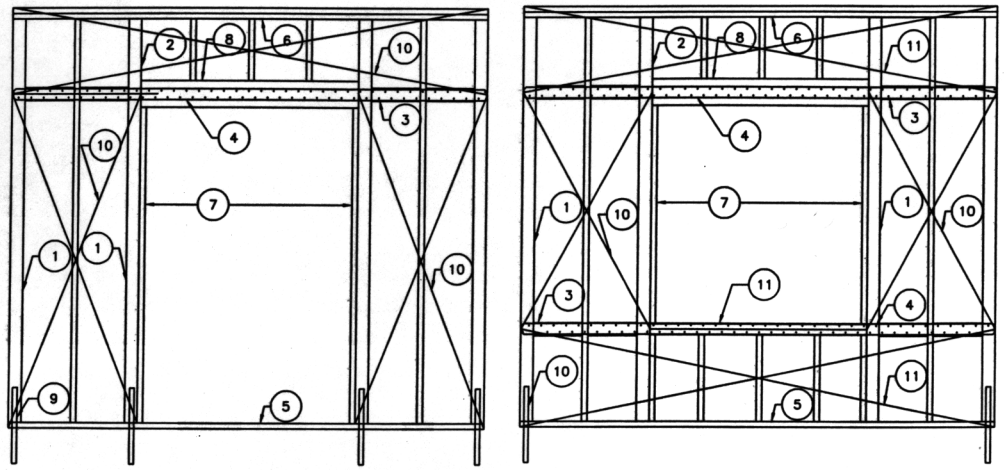

BRACED WALL PANEL AT DOOR AND WINDOW OPENINGS

A

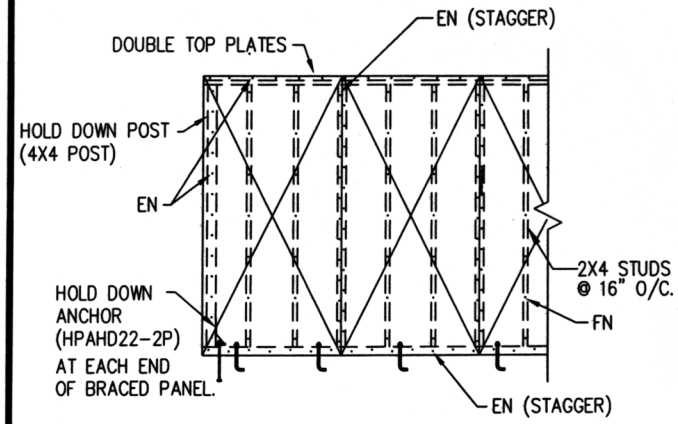

NOTES:

1) BRACED WALL PANEL SHALL BE 15/32" STRUCTURAL II PLYWOOD.
2) MINIMUM PANEL DIMENSION IS 2'-0".
3) USE FULL SIZE PANELS WHERE POSSIBLE (4'X8').
4) FIELD NAILING (FN): 8d NAILS @ 12" O/C.
5) EDGE NAILING (EN): 8d NAILS @ 6" O/C.
5) USE 3X SOLID BLKG @ HORIZ JOINTS.

TYPICAL BRACED WALL PANEL

B

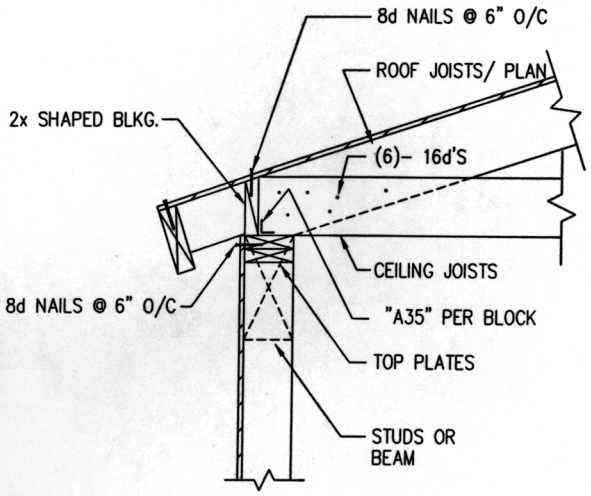

CONNECTION AT EXTERIOR BRACED WALL (ROOF RAFTERS)

C

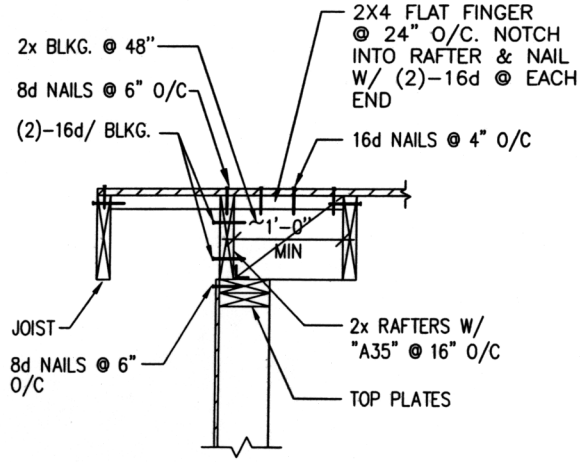

CONNECTION AT EXTERIOR BRACES WALL (GABLE END)

D

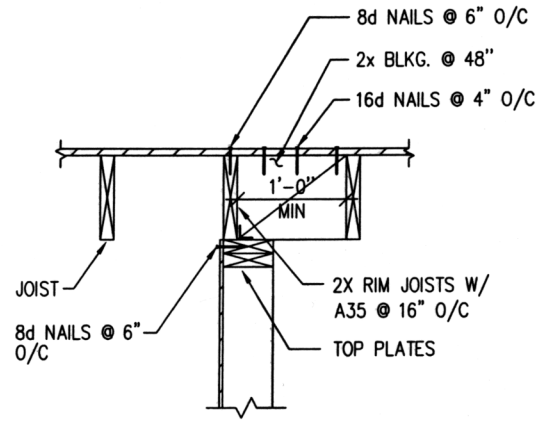

CONNECTION AT INTERIOR BRACED WALL

E

CITY OF RIVERSIDE
BUILDING & SAFETY DIVISION
STANDRAD STRUCTURAL DETAILS

SCALE	NONE
BK DRAWN	06/2002 DATE

REV.	DATE	APPR.
1		
2		
3		
4		
5		

BRACED WALL PANELS

RSD-2.0

SHEET