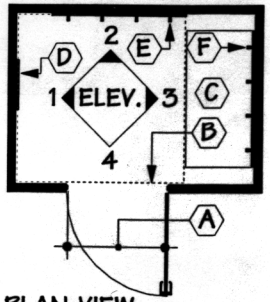

PLAN VIEW

KEYNOTES

A MIN. 32" CLEAR WIDTH OPENING.
B MIN. 60" x 60" CLEAR AREA.
C MIN. 48" W. x MIN. 24" D. BENCH SEAT.
D MIN. 18" W. x MIN. 54" H. MIRROR AT MAX. 20" ABOVE FLOOR.
E CLOTHING HOOKS AT MAX. 48" ABOVE FLOOR.
F CLOTHING HOOKS (BEHIND BENCH) AT MAX. 46" ABOVE FLOOR.

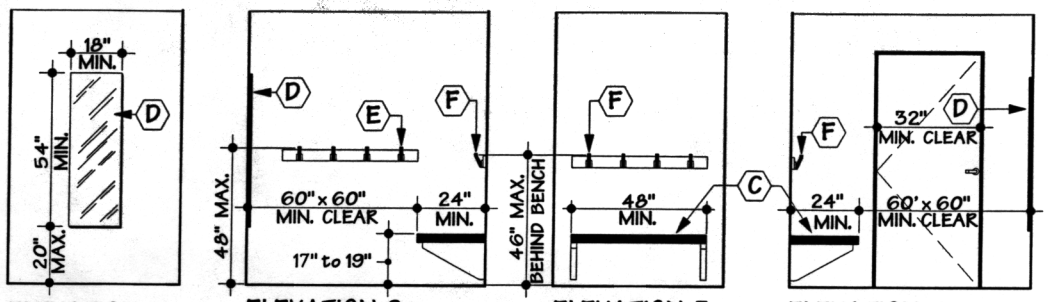

ELEVATION 1 ELEVATION 2 ELEVATION 3 ELEVATION 4

FITTING & DRESSING ROOMS

A

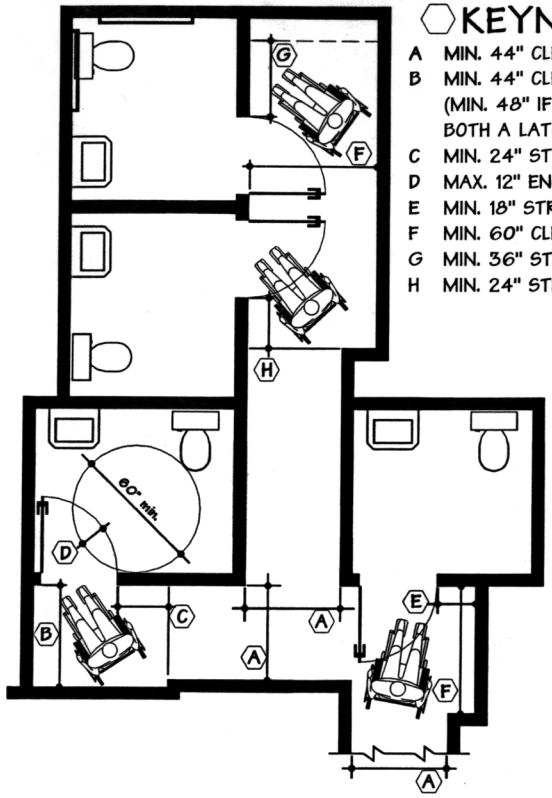

KEYNOTES

A MIN. 44" CLEAR WIDTH
B MIN. 44" CLEAR IN FRONT OF DOOR (MIN. 48" IF DOOR IS EQUIPPED WITH BOTH A LATCH & CLOSER)
C MIN. 24" STRIKE-EDGE CLEARANCE
D MAX. 12" ENCROACHMENT
E MIN. 18" STRIKE-EDGE CLEARANCE
F MIN. 60" CLEAR IN FRONT OF DOOR
G MIN. 36" STRIKE-EDGE CLEARANCE
H MIN. 24" STRIKE-EDGE CLEARANCE

NOTE:
ALTHOUGH THESE DRAWINGS DEPICT REQUIRED MANEUVERING CLEARANCES AT DOORS TO RESTROOMS, THESE CLEARANCES ALSO APPLY TO DOORS TO OTHER ACCESSIBLE ROOMS AND AREAS AS WELL.

MANEUVERING CLEARANCES @ DOORS

B

City of Riverside
Building & Safety Division
DISABLED ACCESS STANDARDS

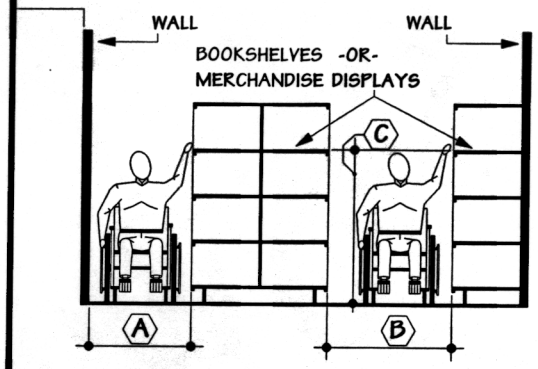

KEYNOTES

A MIN. 36" CLEAR WHEN AISLE SERVES ONE SIDE.
B MIN. 44" CLEAR WHEN AISLE SERVES BOTH SIDES.
C MAX. 54" ABOVE FLOOR TO HIGHEST SHELF.

MINIMUM AISLE WIDTHS

C

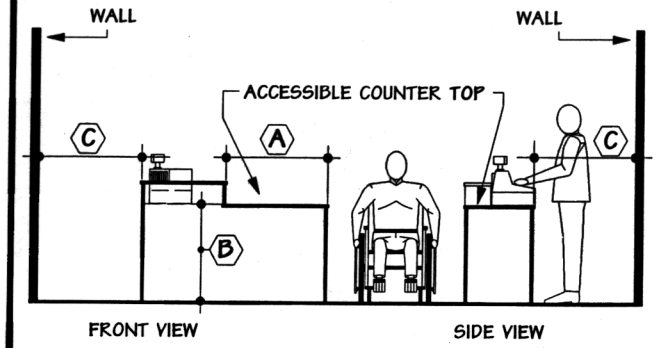

KEYNOTES

A MIN. 36" CLEAR WIDTH ACCESSIBLE COUNTER TOP.
B MIN. 28" to MAX. 34" TO ACCESSIBLE COUNTER TOP.
C MIN. 36" CLEAR WIDTH (EMPLOYEE ACCESS) BEHIND COUNTERS.

POINT OF SALE COUNTERS

D

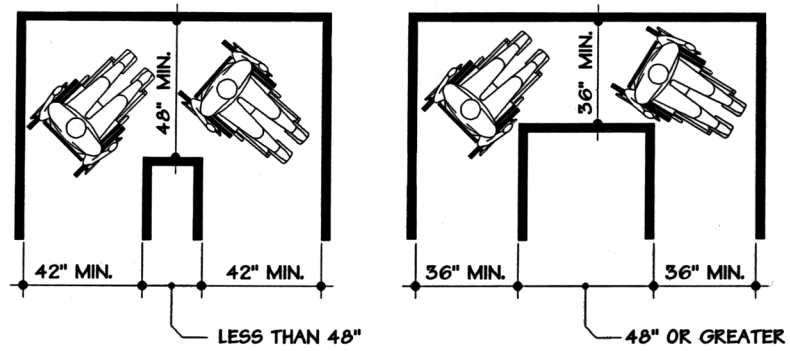

NOTE:
THE MINIMUM CLEAR WIDTH PASSAGE WILL BE GREATER WHERE DOOR OPENINGS OCCUR IN HALLWAYS OR CORRIDORS

TURNS AROUND AN OBSTRUCTION

E

SCALE	NONE
PGH DRAWN	8/02 DATE

REV.	DATE	APPR.
1		
2		
3		
4		
5		

MANEUVERING CLEARANCES

RDA - 4.1
SHEET