FIXTURE NOTE:

IN ADDITION TO THE REQUIRED WATER CLOSET FIXTURE, AN (UNSEPARATED) ACCESSIBLE URINAL FIXTURE MAY ALSO BE INSTALLED IN A MEN'S SINGLE-ACCOMMODATION OR UNISEX TOILET ROOM. A FLOOR DRAIN (w/ TRAP PRIMER) SHALL BE INSTALLED IN ALL TOILET ROOMS WITH (3) OR MORE PLUMBING FIXTURES.

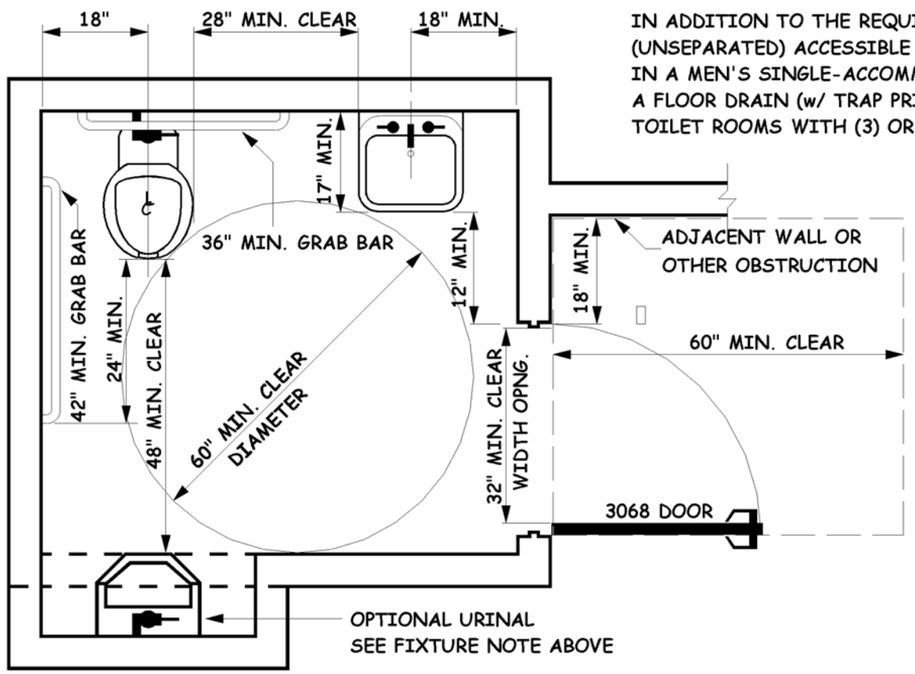

WHEN DOOR SWINGS AWAY FROM TOILET ROOM

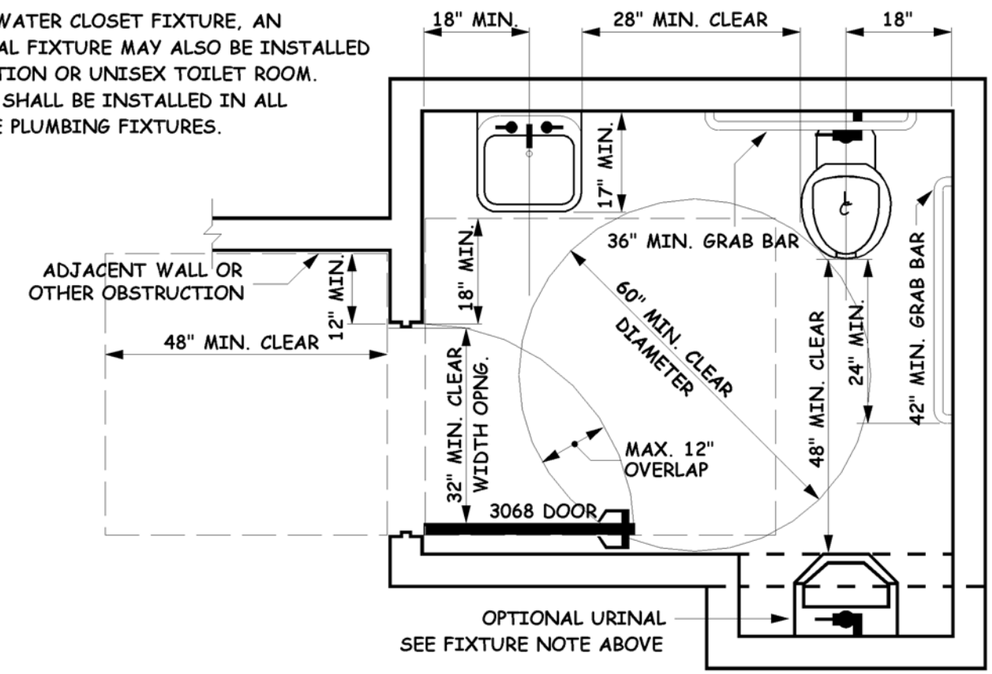

WHEN DOOR SWINGS INTO TOILET ROOM

TYPICAL SINGLE-ACCOMMODATION TOILET ROOM

FIXTURE LAYOUTS MAY VARY

(ref. 2007 CBC sec. 1115B.3.2)

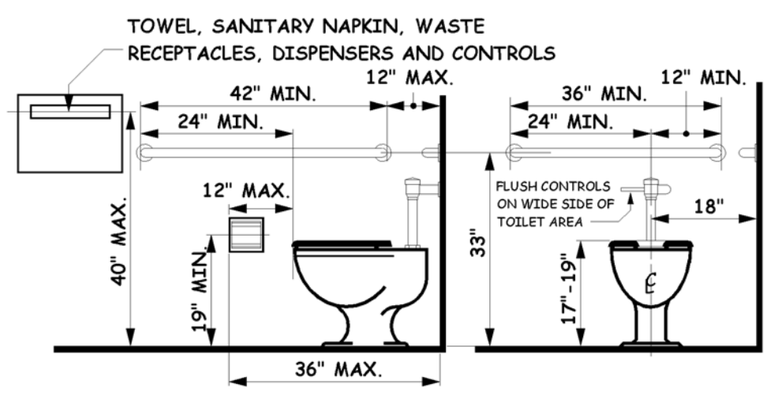

SIDE FRONT

ACCESSIBLE WATER CLOSET

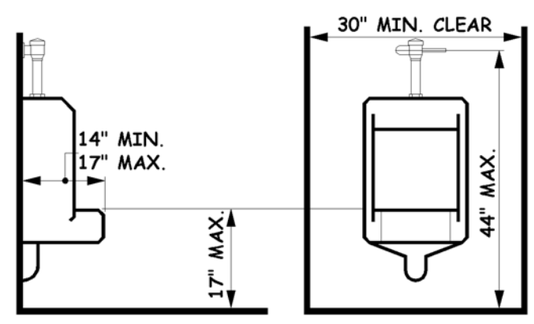

SIDE FRONT

(OPTIONAL) ACCESSIBLE URINAL

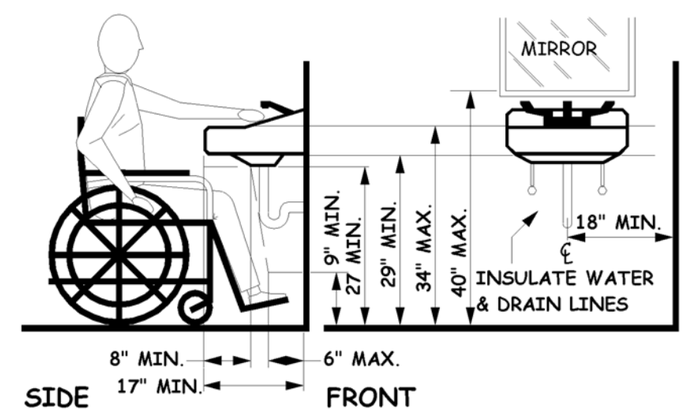

SIDE FRONT

ACCESSIBLE LAVATORY

CITY OF RIVERSIDE

City of Riverside
Building & Safety Division

DISABLED ACCESS STANDARDS

SCALE NONE

PGH 07 / 01 / 08
DRAWN DATE

REV.	DATE	APPR.
1		
2		
3		

SINGLE STALL ACCESSIBLE RESTROOM

RDA - 3.2

SHEET