RIVERSIDE CALIFORNIA

PUBLIC WORKS DEPARTMENT

FEDERAL AID COMBINED ROAD PLAN PROJECT NO. L089(681)

REHABILITATION OF MAJOR CITY STREETS 1989-1990

CONSTRUCTION LEGEND

CENTER LINE ——— ℄ ———
RIGHT-OF-WAY ——— R/W ———
SUBDIVISION LOT LINE ——— PL ———
TOP OF SLOPE
TOE OF SLOPE
DIRECTION OF FLOW

ADJ	ADJUST SEWER,STORM DRAIN,ELECTRIC OR WATER MANHOLE OR GATE VALVE TO GRADE. ADJUSTMENT TO GRADE OR RELOCATION OF GAS & TELEPHONE COMPANY'S FACILITIES WILL BE DONE BY OTHERS.
D RC	0.10' MIN. DGAC (DENSE GRADED AC) OVER ARSAT (ASPHALT RUBBER STRESS ABSORBING TREATMENT). NOTE : RUBBER CHIP (RC) IS THE SAME AS AND IS USED INTERCHANGEABLY WITH ARSAT.
G1	GRIND EX. AC 0.05 BELOW GUTTER LIP OR OUTER EDGE, "DAY-LIGHTING" IN 5' (TYPE 1 GRINDING) EXCEPT AS SHOWN OTHERWISE ON PLAN AND DESCRIBED IN SPECIAL PROVISIONS.
G2 0.1'	GRIND EX. AC 0.10' BELOW EXIST A.C. SURFACE, LIMITS OF GRINDING SHALL BE AS SHOWN ON PLANS. REPLACE WITH 0.10' DGAC (DENSE GRADED AC) OVER ARSAT(ASPHALT RUBBER STRESS ABSORBING TREATMENT).
TDL 3	TRAFFIC DETECTOR LOOP INSTALLATIONS NUMBER OF DETECTOR LOOPS
TDL PTP	PROTECT TRAFFIC DETECTOR LOOPS IN PLACE.
OL VAR	CONSTRUCT A VARIABLE THICKNESS DGAC OVERLAY.
R S1	REMOVE & REPLACE EX. STRUCT. SECT. (COLUMBIA) WITH 0.50' DGAC OVER NATIVE.
R S2	REMOVE & REPLACE EX. STRUCT. SECT.(COLUMBIA) WITH 0.40' DGAC OVER 1.15' CAB.
R S3	REMOVE & REPLACE EX. STRUCT. SECT. (HOLE) WITH 0.33' DGAC OVER 1.33' CAB.
⚠1 SLY RC	*ASPHALT SLURRY SEAL OVER ARSAT.*
SLY	*ASPHALT SLURRY SEAL.*
R S6	REMOVE & REPLACE EX. STRUCT. SECT. (MAGNOLIA) WITH 0.40' DGAC OVER 1.15' CAB.
R S7	REMOVE & REPLACE EX. STRUCT. SECT. (MAGNOLIA) WITH 0.50' DGAC OVER NATIVE.
R S8	REMOVE & REPLACE EX. STRUCT. SECT. (WELLS) WITH 0.33' DGAC OVER 1.65' CAB.

SPECIFIC CONSTRUCTION NOTES

⬢ NUMBERS ABOVE 100 IN A HEXAGON ON THE PLAN REFER TO THE RESPECTIVE STANDARD DRAWING AND SHALL BE CONSTRUCTED ACCORDINGLY. UNLESS MODIFICATIONS ARE NOTED ON THE PLAN OR COVER SHEET. ANY NUMBER SHOWN BELOW THE STANDARD DRAWING NUMBER INDICATES THE SPECIFIC ALTERNATE TO BE CONSTRUCTED.

GENERAL CONSTRUCTION NOTES

1. EXISTING UTILITIES SHOWN ON THIS PLAN ARE PLOTTED FROM UTILITY RECORDS. THE CONTRACTOR IS REQUIRED TO TAKE DUE PRECAUTIONARY MEASURES TO LOCATE AND PROTECT ALL UTILITIES WHETHER OR NOT SHOWN ON THIS PLAN. IF THE COVER OF A UTILITY IS KNOWN, IT IS SHOWN INTHE PROFILE. UTILITIES IN THE PROFILE AS ----\---○ INDICATES THAT THE COVER IS UNKNOWN, BUT THE UTILITY IS NOT EXPECTED TO CONFLICT WITH THE PROPOSED IMPROVEMENTS.
2. ALL ELEVATIONS SHOWN ON THE PLANS SHALL BE STAKED IN THE FIELD.
3. PRIME CONTRACTORS BIDDING THIS WORK SHALL HAVE A CLASS A OR C12 LICENSE.
4. THE SEAM BETWEEN PASSES OF THE DENSE GRADED AC OVERLAY SHALL COINCIDE, AS CLOSE AS POSSIBLE, WITH THE LANE LINES.
5. AFTER REMOVAL & PRIOR TO CURB, C&G OR E.P. REPLACEMENTS, FOR DESIGNATED R&R LENGTHS GREATER THAN 50', THE CONTRACTOR SHALL ALLOW 48 HRS. TO REQUEST SURVEY PLUS AN ADDITIONAL 48 HRS. TO RECEIVE PROPOSED GRADES FOR REPLACEMENT IMPROVEMENTS.
6. TRANVERSE AND LONGITUDINAL CRACKS 3/8" AND LARGER SHALL BE FILLED WITH A RUBBERIZED ASPHALT MATERIAL PRIOR TO OVERLAY OR APPLICATION OF THE RUBBERIZED ASPHALT STRESS ABSORBING TREATMENT (A.R.S.A.T.) WHEN THE PAVEMENT IS TO BE OVERLAID WITH DENSE GRADED AC ONLY ALL CRACKS SHALL BE FILLED WITH A RUBBERIZED ASPHALT MATERIAL (SEE SPECIAL PROVISIONS).
7. MANHOLES & VALVES WITHIN THE GRINDING OR PVMT. REPLACEMENT LIMITS SHALL NOT BE ADJUSTED TO GRADE. INSTEAD, ENOUGH GRINDING (OR PVMT. REMOVAL BY OTHER MEANS.) SHALL BE DONE TO PROVIDE A SMOOTH FINISHED SURFACE TRANSITION AROUND THE COMPLETE CIRCUMFERENCE OF THE STRUCTURE AS NOTED PER PLAN. EXCEPTIONS TO THIS, WHERE ADJUSTMENTS ARE NECESSARY, ARE WHERE MHS& VALVES ARE WITHIN PVMT. REMOVAL AREAS BUT ARE TOO CLOSE (3' OR LESS) TO THE ADJACENT PROPOSED AC OVERLAY.
8. THE RIDGE PRODUCED BY THE EDGE OF THE DENSE GRADED AC OVERLAY SHALL BE MINIMIZED. FEATHER THE DENSE GRADED AC AT INTERSECTIONS TO A MINIMUM THICKNESS (0.03') AT 5' BEYOND THE INDICATED EDGE OF THE OVERLAY.
9. PULL BOXES FOR SPLICING TRAFFIC LOOP DETECTOR CONDUCTORS AND LEAD-IN CABLE ARE NORMALLY ADJACENT TO DETECTORS,UNLESS OTHERWISE SHOWN ON PLAN.
10. RESURFACING LIMITS SHOWN AT INTERSECTIONS ARE NOT ABSOLUTE.THE INSPECTOR MAY REQUEST GRINDING & PAVING INTO SIDE STREETS TO IMPROVE RIDEABILITY.
11. PLANS DO NOT TYPICALLY INDICATE LOCATIONS OF WATER VALVES OR FIRE HYDRANTS TO SIMPLIFY PLAN PREPARATION EFFORT. HOWEVER, THESE FEATURES MUST BE LOCATED DURING CONSTRUCTION TO MAKE VALVE BOX ADJUSTMENTS AND BLUE HYDRANT MARKER INSTALLATIONS IF THESE CONTINGENCY ITEMS ARE AWARDED TO THE CONTRACTOR. EVEN IF THE VALVE BOX ADJUSTMENT CONTINGENCY ITEM IS NOT AWARDED, THE VALVE BOXES MUST BE "TIED OUT" AS PART OF THE CONTRACTOR'S OTHER WORK OBLIGATION.

STREET	LIMITS	TRAFFIC INDEX	LENGTH	R3143 SH. No.	STRIPING DWG.:PGS.
① COLUMBIA AVENUE	MAIN TO 215 FREEWAY	9.0	3,980′ - 0.8 MILE	2&3	XL - 241
② HOLE AVENUE	LA SIERRA TO MAGNOLIA	8.0	9,420′ - 1.8 MILE	4-7	XL - 249
③ MAGNOLIA AVENUE	JACKSON TO WASHINGTON	9.0	13,650′- 2.6 MILE	8-13	XL - 255
④ WELLS AVENUE	CREST TO VAN BUREN	8.0	5,470′ - 1.0 MILE	14-16	XL - 250
			TOTALS: 32,520′ - 6.2 MILE		

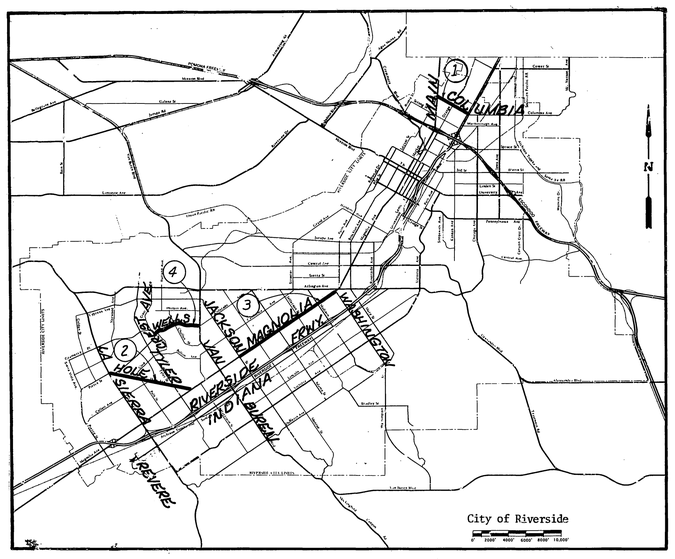

PROJECT LOCATION PLAN

SCALE: 1"= 8,000'

EXISTING UNDERGROUND & TOPOGRAPHY LEGEND

EXISTING UNDERGROUND UTILITIES:

SANITARY SEWER — 8"S
WATER LINE — 6"W
STORM DRAIN — 24"SD
GAS LINE — 3"G
ABANDONDED UTILITY — 6"G(ABAN'D.)
TELEPHONE CONDUIT — T
ELECTRICAL CONDUIT — E
ELECTROLIER LIGHTING CONDUIT — ELC
TRAFFIC SIGNAL — SIG
FIRE ALARM — F

EXISTING TOPOGRAPHY:

BLOCK WALL
BOARD FENCE
WIRE FENCE
CHAIN LINK FENCE
TOP OF SLOPE
TOE OF SLOPE
DIRECTION OF FLOW

SANITARY SEWER M.H.
SANITARY SEWER CLEANOUT
STORM DRAIN M.H.
IRRIGATION WEIR
WATER M.H.
GAS M.H.
ELECTRIC M.H.
TELEPHONE M.H.
WATER METER
FIRE HYDRANT
SPRINKLER HEAD
VALVE
AIR VALVE
AIR VENT
BUS STOP SIGN
BLOW-OFF VALVE
IRRIGATION STAND PIPE
POLE & GUY ANCHOR
POWER POLE
TELEPHONE POLE
TELEPHONE RISER
JOINT USE POLE
PULL BOX
TRAFFIC SIGN
PARKING METER
FIRE ALARM BOX
STREET NAME SIGN
GAS METER
MAIL BOX
FAUCET
WALK-DON'T WALK PEDESTRIAN SIGNAL
ELECTRICAL TEST STATION
WHEEL STOP
A.C. BERM
PEDESTRIAN PUSH BUTTON
RAILROAD TRACKS
RAILROAD SIGN
RAILROAD SIGNAL
TRAFFIC SIGNAL
TRAFFIC SIGNAL ON MAST ARM
TRAFFIC SIGNAL CONTROLLER
TRAFFIC SIGNAL PRESSURE DETECTOR
TRAFFIC SIGNAL LOOP DETECTOR
STREET LIGHT & TRAFFIC SIGNAL ON MAST ARM
STREET LIGHT (UPRIGHT)
STREET LIGHT ON MAST ARM
STEEL POST
WOOD POST
CONCRETE
ASPHALT
BUILDING
EDGE OF PAVEMENT
BUILDING
BUILDING

IMPORTANT NOTICE

Section 4216/4217 of the Government Code requires a Dig Alert Identification Number to be issued before a "Permit to Excavate" will be valid. For your Dig Alert I.D. Nuumber call Underground Service Alert TOLL FREE 1-800-422-4133 Two working days before you dig.

ENGINEER IN RESPONSIBLE CHARGE
Ronald C. Mueller
RONALD C. MUELLER
R.C.E. 29510 expires 3-31-95
DATE 6-21-91

REGISTERED PROFESSIONAL ENGINEER RONALD C. MUELLER NO. 29510 Expires: 3-31-95 CIVIL STATE OF CALIFORNIA

MARK	REVISIONS	APPR.	DATE
⚠1	ADDED ASPHALT SLURRY SEAL OVER ARSAT NOTE	RPM	11/3/91

DESIGNED BY JRR,SK,WT DRAWN BY RJM&TP CHECKED BY RPM

CITY OF RIVERSIDE
PUBLIC WORKS DEPARTMENT

APPROVED BY	DATE	BY
DEPUTY P.W. ENGINEER	7-2-91	RWC
PRINCIPAL ENGINEER	6/25/91	RPM
SURVEYOR	6-24-91	RJM
CHIEF P.W. INSPECTOR	7-2-91	KSE
TRAFFIC DIVISION	6-25-91	JC
STREET SERVICES	6-24-91	TDB

APPROVED BY PUBLIC WORKS DIRECTOR
DATE 6/27/91

AS BUILT 1/22/92 RJM

REHABILITATION OF MAJOR CITY STREETS 1989 - 1990

HORIZ. SCALE: 1"= 40' VERT. SCALE: 1"=

ACCOUNT NO. 30-575-283-86

A-3143

SHEET 1 OF 16

INDEXED 11-20-91 GH

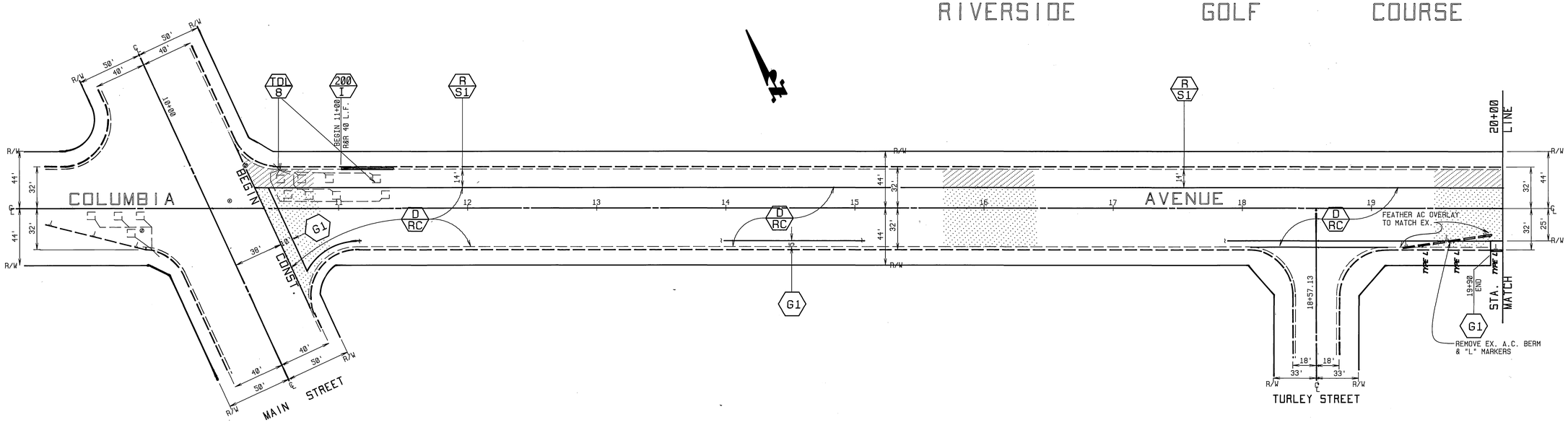

BENCHMARK
P.K. NAIL IN LEAD AT E.C.R. S/W CORNER COLUMBIA AVE. AT ORANGE ST. ELEV. 827.252

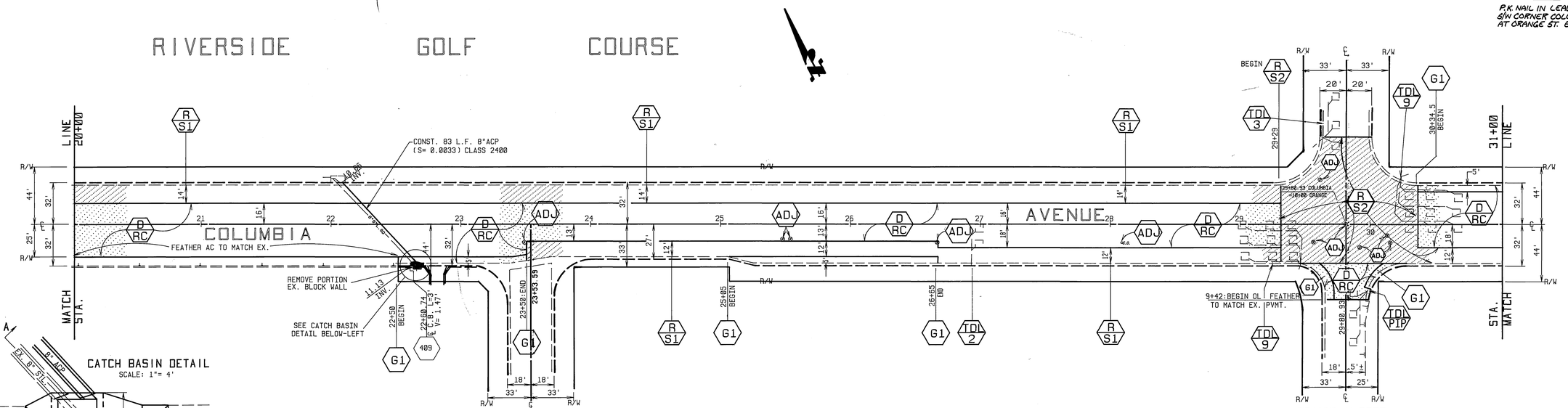

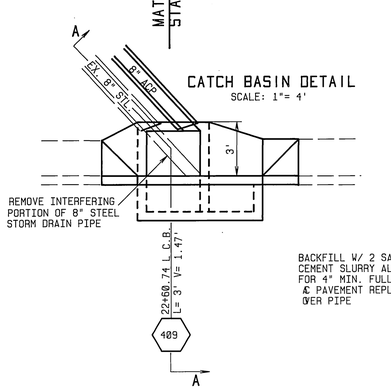

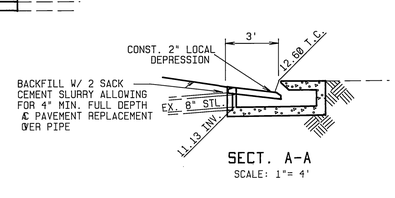

QUANTITIES FOR COLUMBIA AVE.

ITEM	QUANTITY	ITEM	QUANTITY
CRACK SEALING	11,200 LF	TRAFFIC SIGNAL LOOPS	31 EA.
DENSE GRADED A.C.	3278 TONS	BLUE FIRE HYDRANT MARKERS	7 EA.
ASPHALT RUBBER S.A.T.	19,305 SY	CRUSHED AGGREGATE BASE	1518 CY
A.C.PVMT. GRINDING,TYPE I	3682 LF	TACK COAT UNDER ARSAT	965 GAL
A.C.PVMT. GRINDING,TYPE II	1368 SF	REPLACE VALVE BOX & COVER	1 EA.
UNCLASSIFIED EXCAVATION	2492 CY	R&R C&G, 200-I (6" C.F.)	40 LF
ADJUST SWR.& S.D.M.H. FRAME & COVER TO GRADE	16 EA.	⊕ PAVEMENT PREPARATION (0.5' THICK)	
ADJUST WATER GATE VALVE COVER TO GRADE	44 EA.	ASPHALT CONCRETE REMOVAL	161 CY
		D.G.A.C. REPLACEMENT	326 TONS
ADJUST WATER MH TO GRADE	6 EA.		

REGISTERED PROFESSIONAL ENGINEER RONALD C. MILLER No. 29510 Expires 3-31-95 CIVIL STATE OF CALIFORNIA

MARK	REVISIONS	APPR.	DATE

DESIGNED BY SK DRAWN BY RJM CHECKED BY RCM

CITY OF RIVERSIDE
PUBLIC WORKS DEPARTMENT

APPROVED BY	DATE	BY
DEPUTY P.W. ENGINEER	6/26/91	RMC
PRINCIPAL ENGINEER	6/25/91	
SURVEYOR		
CHIEF P.W. INSPECTOR	7-2-91	
TRAFFIC DIVISION	6-25-91	
STREET SERVICES	6-24-91	

APPROVED BY [signature]
PUBLIC WORKS DIRECTOR
DATE 6/27/91

REHABILITATION OF MAJOR CITY STREETS 89-90

COLUMBIA AVENUE MAIN TO FREEWAY 91

HORIZ. SCALE: 1"= 40' VERT. SCALE: 1"=

AS BUILT 4/22/92 RMM
ACCOUNT NO. 30-575-283-86

R-3143

SHEET 2 OF 16

INDEXED 11-91 LH

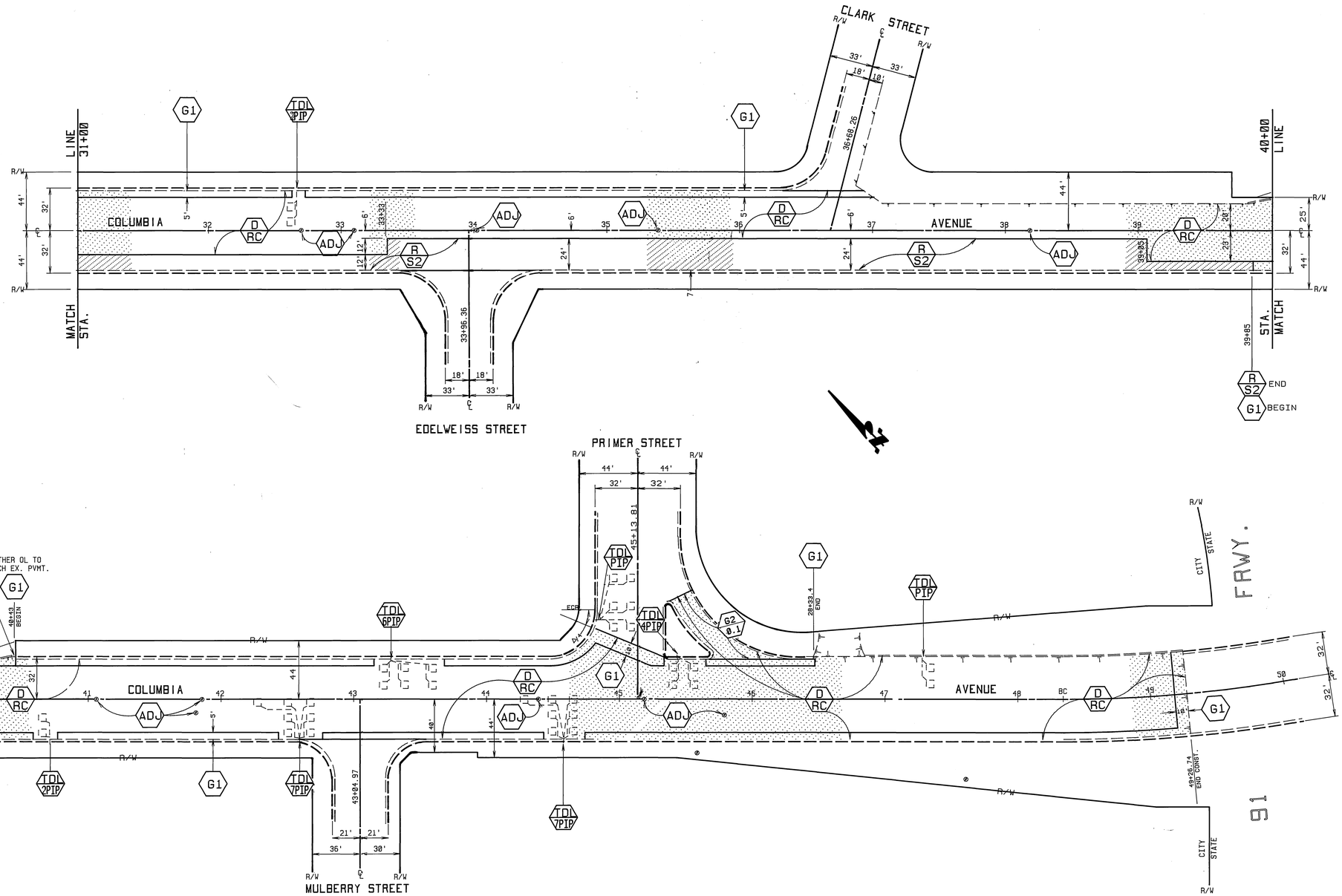

REGISTERED PROFESSIONAL ENGINEER
RONALD C. MUELLER
NO. 29510
Expires: 3-31-91
CIVIL
STATE OF CALIFORNIA

MARK	REVISIONS	APPR.	DATE

DESIGNED BY SK DRAWN BY RJM CHECKED BY RCM

CITY OF RIVERSIDE
PUBLIC WORKS DEPARTMENT

APPROVED BY	DATE	BY
DEPUTY P.W. ENGINEER	7/24/91	
PRINCIPAL ENGINEER	6/25/91	
SURVEYOR		
CHIEF P.W. INSPECTOR	7-2-91	
TRAFFIC DIVISION	6-25-91	
STREET SERVICES	6-24-91	

APPROVED BY
PUBLIC WORKS DIRECTOR
DATE 6/27/91

REHABILITATION OF MAJOR CITY STREETS 89-90

COLUMBIA AVENUE
MAIN TO FREEWAY 91

HORIZ. SCALE: 1"= 40' VERT. SCALE: 1"=

AS BUILT 4/28/92 RJM

ACCOUNT NO. 30-575-263-06

R-3143

SHEET 3 OF 16

INDEXED 11-20-91 LH

QUANTITIES FOR HOLE AVE.

ITEM	QUANTITY	ITEM	QUANTITY
CRACK SEALING	35,520 LF	TRAFFIC SIGNAL LOOPS	20 EA.
DENSE GRADED A.C.	6584 TONS	CRUSHED AGGREGATE BASE	7457 CY
ASPHALT RUBBER S.A.T.	14,032 SY	BLUE FIRE HYDRANT MARKERS	9 EA.
A.C.PVMT. GRINDING,TYPE I	14,463 LF	AC BERM STD. 250 TYPE I	1171 LF
UNCLASSIFIED EXCAVATION	9296 CY	RELOCATE CMP DROP INLET	2 EA.
R & R C&G	225 LF	TACK COAT UNDER ARSAT	702 GAL.
ADJUST SWR.& S.D.M.H. FRAME & COVER TO GRADE	37 EA.	R&R X-GUTTER STD DWG 220	36 SF
		⊕ PAVEMENT PREPARATION (0.5' THICK)	
ADJUST WATER GATE VALVE COVER TO GRADE	30 EA.	ASPHALT CONCRETE REMOVAL	702 CY
		D.G.A.C. REPLACEMENT	1421 TONS

REGISTERED PROFESSIONAL ENGINEER RONALD C. MUELLER NO. 29510 Expires: 3-31-95 CIVIL STATE OF CALIFORNIA

MARK	REVISIONS	APPR.	DATE

DESIGNED BY RVZ DRAWN BY CS, RJM CHECKED BY RCM

CITY OF RIVERSIDE
PUBLIC WORKS DEPARTMENT

APPROVED BY	DATE	BY
PRINCIPAL ENGINEER	6/25/91	
CHIEF P.W. ENGINEER	7/2/91	
CHIEF P.W. INSPECTOR	7-2-91	
SURVEYOR	6-24-91	
TRAFFIC DIVISION	6-25-91	
STREET SERVICES	6-24-91	

APPROVED BY
PUBLIC WORKS DIRECTOR
DATE 6/27/91

REHABILITATION OF MAJOR CITY STREETS 89/90

HOLE AVENUE
LA SIERRA TO MAGNOLIA

HORIZ. SCALE: 1"= 40' VERT. SCALE: 1"=

AS BUILT 4/22/92

ACCOUNT NO. 30-575-283-06

R-3143

SHEET 4 OF 16

INDEXED 11-20-91 LH

NOTE: CONST. 3' WIDE BERM OPENINGS AS SHOWN ON PLAN (6' OPENINGS AT INLET STRUCTURES)

AS BUILT 4/22/92 RDM

MARK	REVISIONS	APPR.	DATE

DESIGNED BY RVZ DRAWN BY CS, RJM CHECKED BY RCM

CITY OF RIVERSIDE
PUBLIC WORKS DEPARTMENT

APPROVED BY	DATE	BY
PRINCIPAL ENGINEER	6/25/91	
CHIEF P.W. ENGINEER	7-2-91	
CHIEF P.W. INSPECTOR	7-2-91	
SURVEYOR	6/24/91	
TRAFFIC DIVISION	6-25-91	
STREET SERVICES	6-24-91	

APPROVED BY
PUBLIC WORKS DIRECTOR
DATE 6/27/91

REHABILITATION OF MAJOR CITY STREETS 89/90

HOLE AVENUE
LA SIERRA TO MAGNOLIA

HORIZ. SCALE: 1"= 40' VERT. SCALE: 1"=

ACCOUNT NO. 30-575-283-06

R-3143

SHEET 5 OF 16

INDEXED 11-20-91 LH

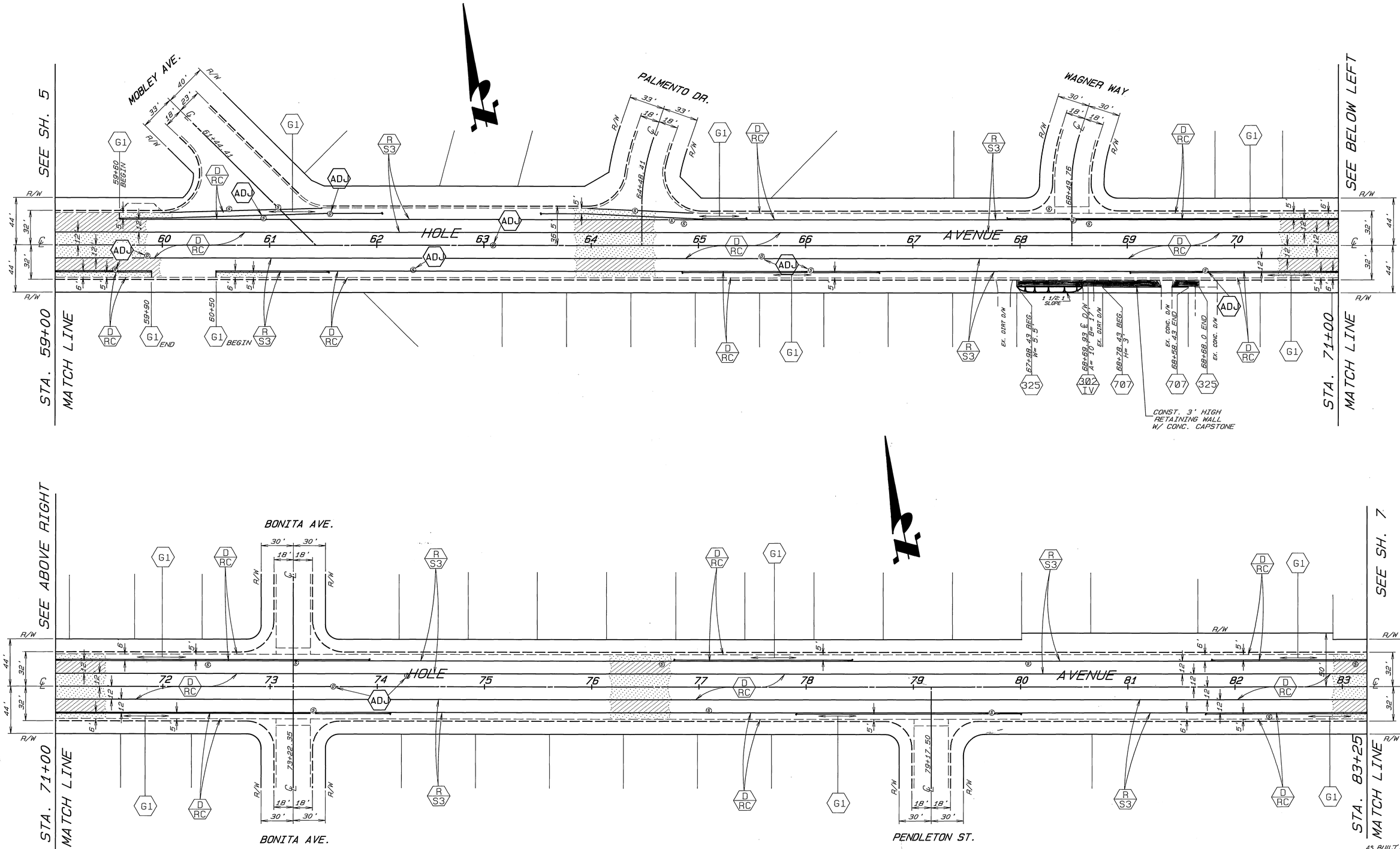

MARK	REVISIONS	APPR.	DATE

DESIGNED BY RVZ DRAWN BY CS, RJM CHECKED BY RCM

REGISTERED PROFESSIONAL ENGINEER RONALD C. MOELLER NO. 29510 Expires: 3-31-95 CIVIL STATE OF CALIFORNIA

CITY OF RIVERSIDE
PUBLIC WORKS DEPARTMENT

APPROVED BY	DATE	BY
PRINCIPAL ENGINEER	6/25/91	
CHIEF P.W. ENGINEER	7-2-91	
CHIEF P.W. INSPECTOR	7-2-91	
SURVEYOR		
TRAFFIC DIVISION	6-25-91	
STREET SERVICES	6-24-91	

APPROVED BY
PUBLIC WORKS DIRECTOR
DATE 6/27/91

REHABILITATION OF MAJOR CITY SREETS 89/90

HOLE AVENUE
LA SIERRA TO MAGNOLIA

HORIZ. SCALE: 1"= 40' VERT. SCALE: 1"=

AS BUILT 4/22/92 RJM
ACCOUNT NO. 30-575-283-06

R-3143

SHEET 6 OF 16

INDEXED 11-20-91

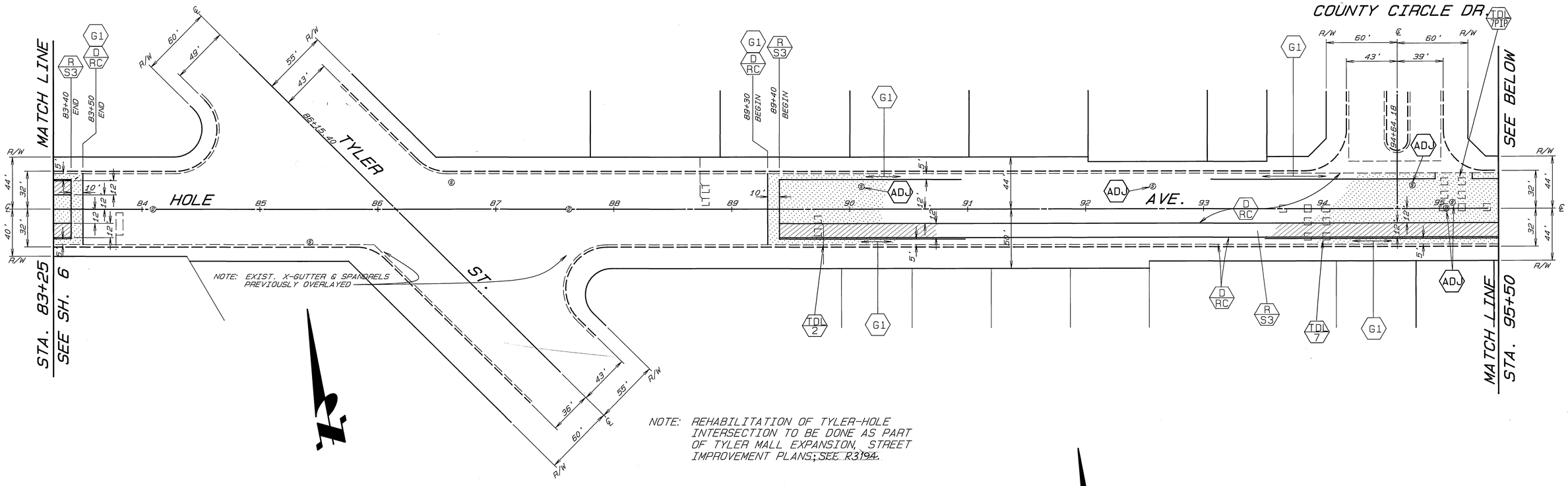

NOTE: REHABILITATION OF TYLER-HOLE INTERSECTION TO BE DONE AS PART OF TYLER MALL EXPANSION, STREET IMPROVEMENT PLANS; SEE R3194.

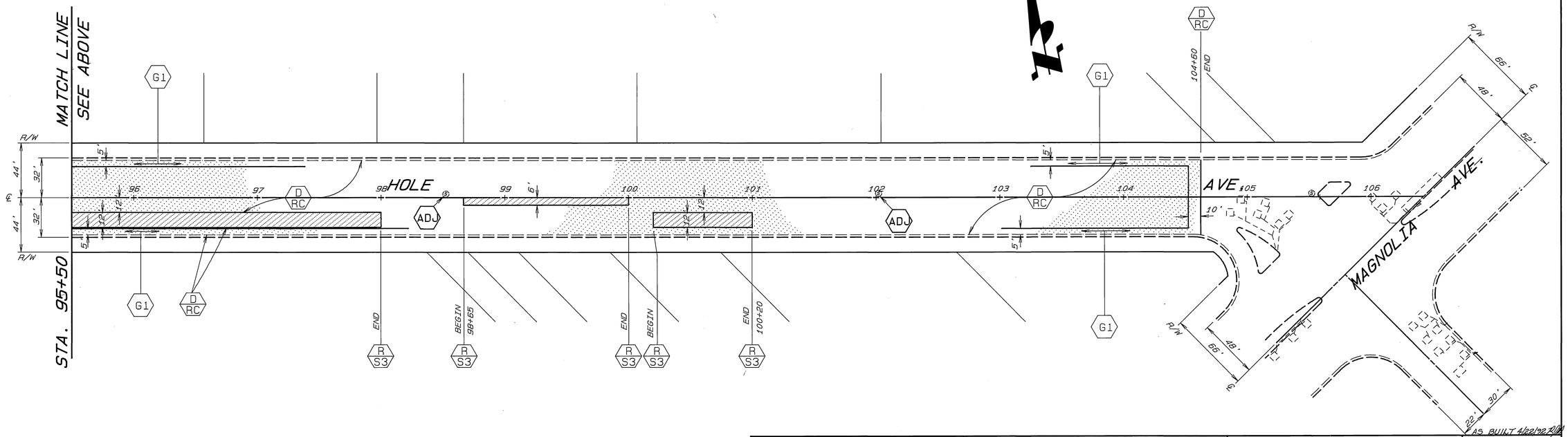

REGISTERED PROFESSIONAL ENGINEER
RONALD S. MEYER
No. 29510
Expires: 3-31-96
CIVIL
STATE OF CALIFORNIA

MARK	REVISIONS	APPR.	DATE

DESIGNED BY BVZ DRAWN BY BVZ, BJM CHECKED BY RCM

CITY OF RIVERSIDE
PUBLIC WORKS DEPARTMENT

	APPROVED BY	DATE	BY
	PRINCIPAL ENGINEER	6/25/91	
	CHIEF P.W. ENGINEER	7-2-91	
	CHIEF P.W. INSPECTOR	7-2-91	
	SURVEYOR		
	TRAFFIC DIVISION	6-25-91	
	STREET SERVICES	6/24/91	

APPROVED BY
PUBLIC WORKS DIRECTOR
DATE 6/27/91

REHABILITATION OF MAJOR CITY STREETS 89/90

HOLE AVENUE
LA SIERRA TO MAGNOLIA

HORIZ. SCALE: 1"= 40' VERT. SCALE: 1"=

AS BUILT 4/22/92 RM

ACCOUNT NO. 30-575-283-96

R-3143

SHEET 7 OF 16

INDEXED 11-20-91 RM

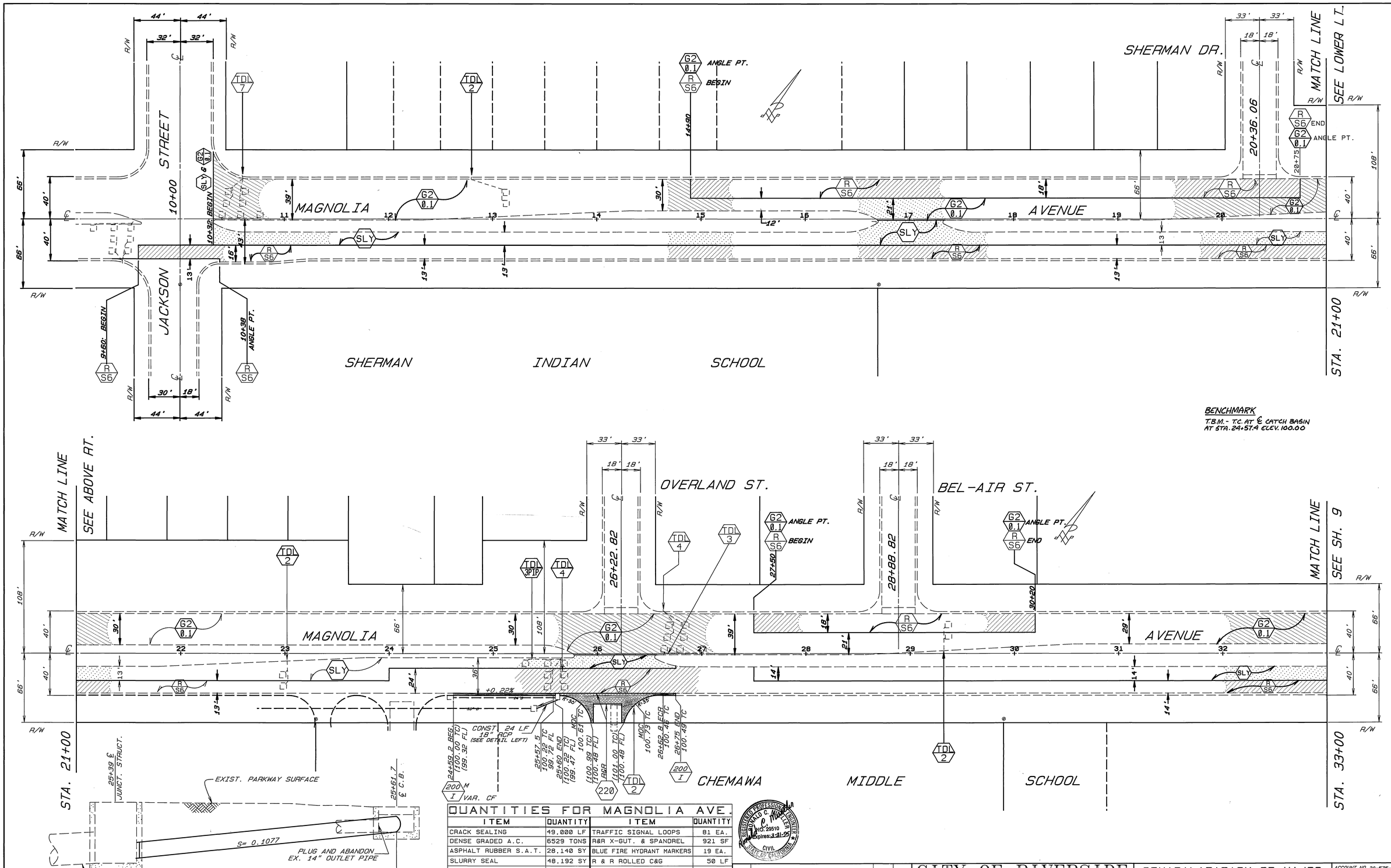

BENCHMARK
T.B.M. - TC. AT ℄ CATCH BASIN AT STA. 24+57.9 ELEV. 100.00

QUANTITIES FOR MAGNOLIA AVE.

ITEM	QUANTITY	ITEM	QUANTITY
CRACK SEALING	49,000 LF	TRAFFIC SIGNAL LOOPS	81 EA.
DENSE GRADED A.C.	6529 TONS	R&R X-GUT. & SPANDREL	921 SF
ASPHALT RUBBER S.A.T.	28,140 SY	BLUE FIRE HYDRANT MARKERS	19 EA.
SLURRY SEAL	48,192 SY	R & R ROLLED C&G	50 LF
UNCLASSIFIED EXCAVATION	8607 CY	R & R C&G 200 TYPE I	319 LF
TACK COAT UNDER ARSAT	1365 GAL	CRUSHED AGGREGATE BASE	6320 CY
ADJUST SWR.& S.D.M.H. FRAME & COVER TO GRADE	0 EA.	A.C.PVMT. GRINDING,TYPE II	253,259 SF
		⊕ PAVEMENT PREPARATION (0.5' THICK)	
ADJUST WATER GATE VALVE COVER TO GRADE	60 EA.	ASPHALT CONCRETE REMOVAL	812 CY
		D.G.A.C. REPLACEMENT	1644 TONS
REPLACE VALVE BOX & COVER	2 EA.		

REGISTERED PROFESSIONAL ENGINEER — RONALD C. MILLER — No. 29510 — Civil — Expires: 3-31-93 — STATE OF CALIFORNIA

MARK	REVISIONS	APPR.	DATE

DESIGNED BY SK DRAWN BY CS RJM CHECKED BY RCM

CITY OF RIVERSIDE
PUBLIC WORKS DEPARTMENT

APPROVED BY	DATE	BY
PRINCIPAL ENGINEER	6/25/91	
CHIEF P.W. ENGINEER	6/27/91	
CHIEF P.W. INSPECTOR	6-25-91	
SURVEYOR	6-25-91	
TRAFFIC DIVISION	6-25-91	
STREET SERVICES	6-24-91	

APPROVED BY _____ PUBLIC WORKS DIRECTOR
DATE 6/27/91

REHABILITATION OF MAJOR CITY STREETS 89-90

MAGNOLIA AVENUE
JACKSON TO WASHINGTON

HORIZ. SCALE: 1"= 40' VERT. SCALE: 1"=

ACCOUNT NO. 30-575-283-06

R-3143

SHEET 8 OF 16

INDEXED 11-20-91 GH

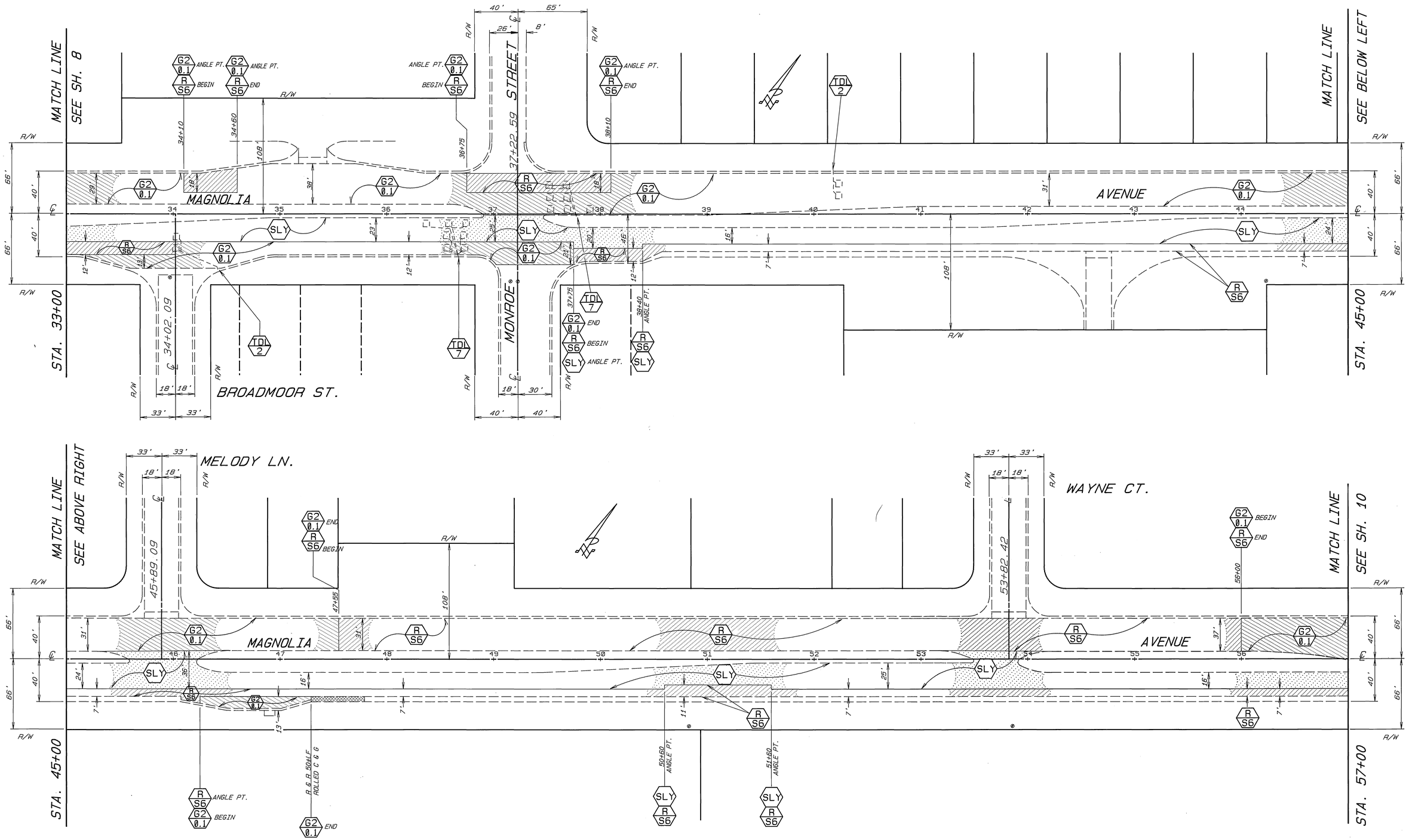

MARK	REVISIONS	APPR.	DATE

DESIGNED BY SK DRAWN BY CS RJM CHECKED BY RCM

APPROVED BY	DATE	BY
PRINCIPAL ENGINEER	6/25/91	
CHIEF P.W. ENGINEER	6/27/91	RMG
CHIEF P.W. INSPECTOR	7-2-91	
SURVEYOR		
TRAFFIC DIVISION	6-25-91	
STREET SERVICES	6-24-91	

APPROVED BY
PUBLIC WORKS DIRECTOR
DATE 6/27/91

CITY OF RIVERSIDE
PUBLIC WORKS DEPARTMENT

REHABILITATION OF MAJOR CITY STREETS 89-90

MAGNOLIA AVENUE
JACKSON TO WASHINGTON

HORIZ. SCALE: 1"= 40' VERT. SCALE: 1"=

AS BUILT 4/22/92 RCM
ACCOUNT NO. 30-575-283-06

R-3143

SHEET 9 OF 16

INDEXED 11-20-91

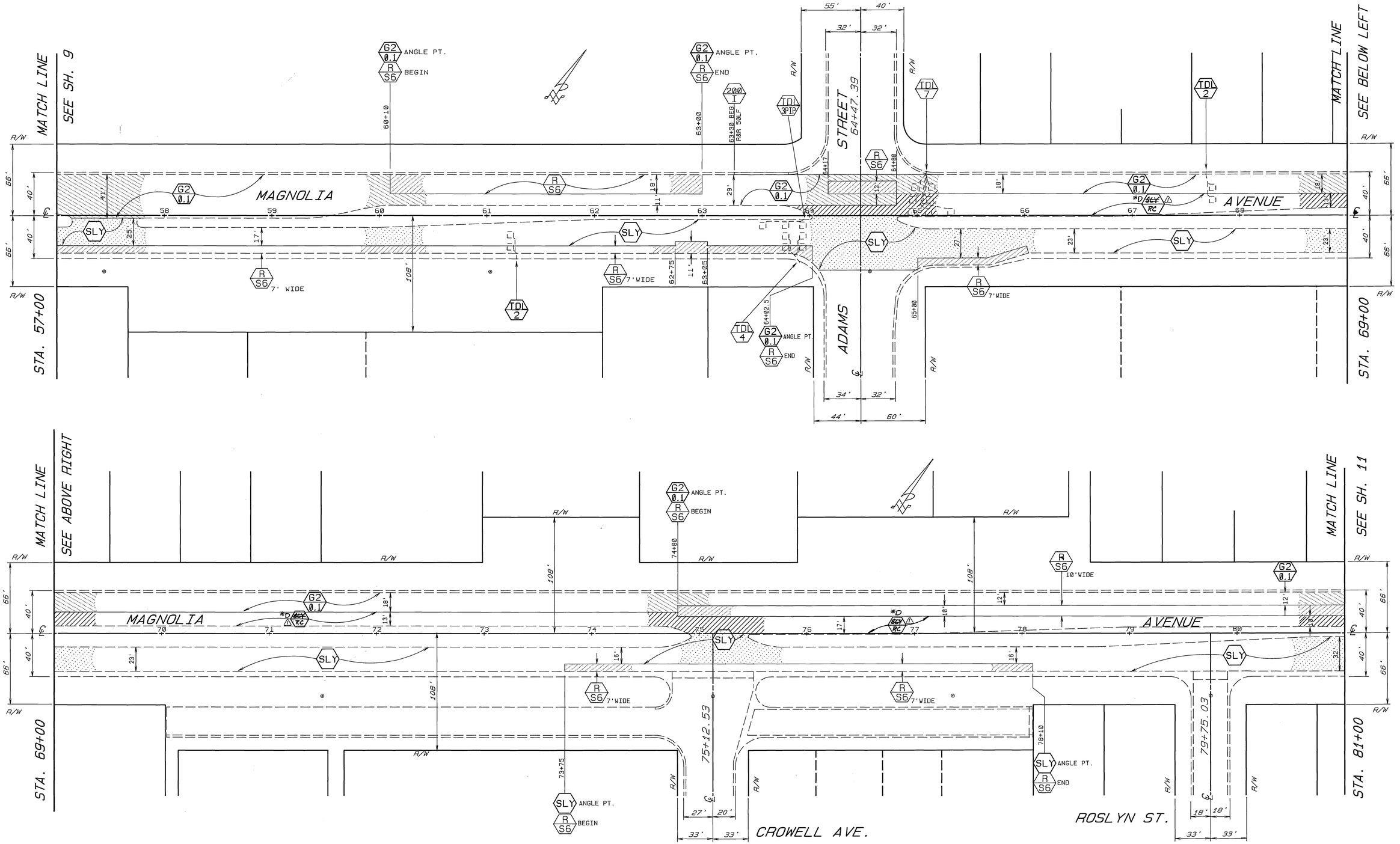

⚠	ADDED RUBBER CHIP TO SLURRY AREA IN WEST-BOUND BARREL	RCM	7/8/91
MARK	REVISIONS	APPR.	DATE

DESIGNED BY SK DRAWN BY CS RJM CHECKED BY RCM

REGISTERED PROFESSIONAL ENGINEER — DONALD C. MILLER — NO. 29510 — Expires: 3-31-95 — CIVIL — STATE OF CALIFORNIA

CITY OF RIVERSIDE
PUBLIC WORKS DEPARTMENT

	DATE	BY
APPROVED BY		
PRINCIPAL ENGINEER	6/27/91	
CHIEF P.W. ENGINEER	7-2-91	
CHIEF P.W. INSPECTOR	7-2-91	
SURVEYOR		
TRAFFIC DIVISION	6/25/91	
STREET SERVICES	6/24/91	

APPROVED BY
PUBLIC WORKS DIRECTOR
DATE 6/27/91

REHABILITATION OF MAJOR CITY STREETS 89-90
MAGNOLIA AVENUE JACKSON TO WASHINGTON

HORIZ. SCALE: 1"= 40' VERT. SCALE: 1"=

*AS BUILT 4/22/92 RM

ACCOUNT NO. 30-575-283-06

R-3143

SHEET 10 OF 16

INDEXED 11-20-91 HH

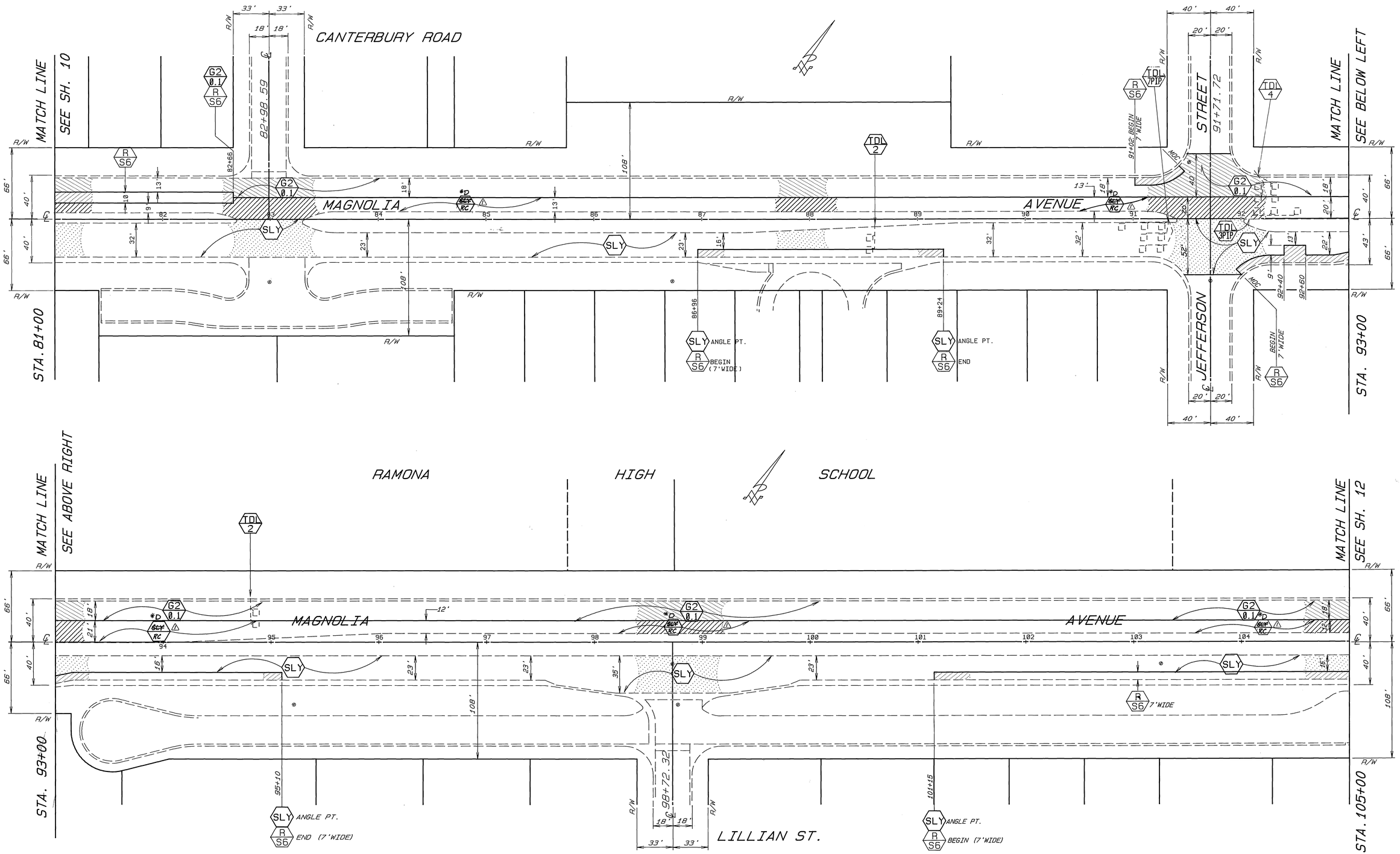

MARK	REVISIONS	APPR.	DATE
⚠	ADDED RUBBER CHIP TO SLURRY AREA IN WEST-BOUND BARREL	RCM	7/3/91

DESIGNED BY SK DRAWN BY CS RJM CHECKED BY RCM

CITY OF RIVERSIDE
PUBLIC WORKS DEPARTMENT

	APPROVED BY	DATE	BY
PRINCIPAL ENGINEER		6/27/91	RCM
CHIEF P.W. ENGINEER		6/27/91	M.G.
CHIEF P.W. INSPECTOR		7-2-91	RJM
SURVEYOR		6-25-91	
TRAFFIC DIVISION			
STREET SERVICES			

APPROVED BY _____ PUBLIC WORKS DIRECTOR
DATE 6/27/91

REHABILITATION OF MAJOR CITY STREETS 89-90

MAGNOLIA AVENUE
JACKSON TO WASHINGTON

HORIZ. SCALE: 1"= 40' VERT. SCALE: 1"=

*AS BUILT 4/22/92 RJM
ACCOUNT NO. 30-575-283-06

R-3143

SHEET 11 OF 16

INDEXED 11-20-91

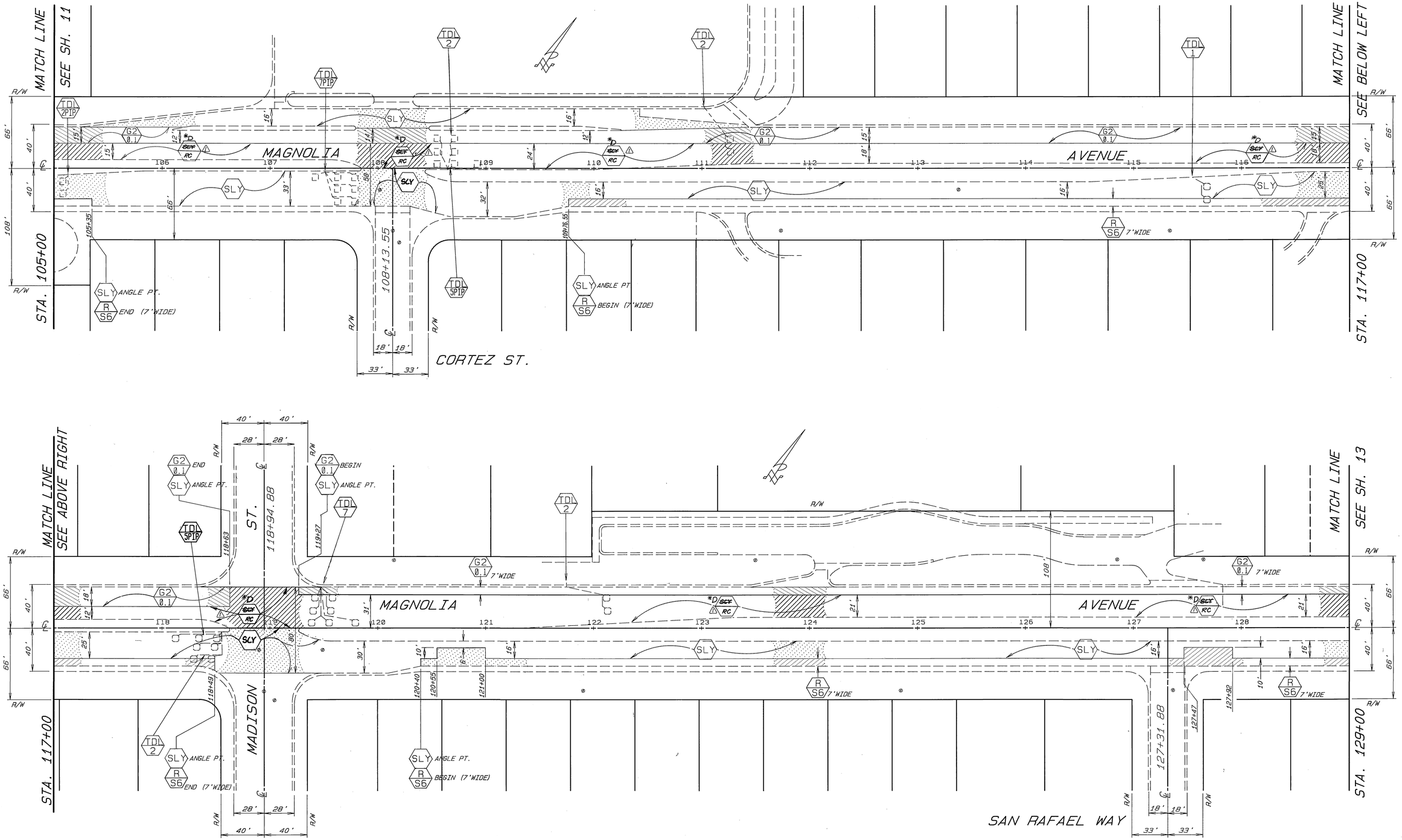

MARK	REVISIONS	APPR.	DATE
△	ADDED RUBBER CHIP TO SLURRY AREA IN WEST-BOUND BARREL	RCM	7/3/91

DESIGNED BY SK DRAWN BY CS RJM CHECKED BY RCM

REGISTERED PROFESSIONAL ENGINEER
RONALD C. MEISELER
NO. 29510
Expires: 3-31-95
CIVIL
STATE OF CALIFORNIA

CITY OF RIVERSIDE
PUBLIC WORKS DEPARTMENT

APPROVED BY	DATE	BY
PRINCIPAL ENGINEER	6/25/91	
CHIEF P.W. ENGINEER	6/27/91	RMC
CHIEF P.W. INSPECTOR	7-29	
SURVEYOR		
TRAFFIC DIVISION	6-25-91	
STREET SERVICES	10-29-91	

APPROVED BY
PUBLIC WORKS DIRECTOR
DATE 6/27/91

REHABILITATION OF MAJOR CITY STREETS 89-90

MAGNOLIA AVENUE
JACKSON TO WASHINGTON

HORIZ. SCALE: 1"= 40' VERT. SCALE: 1"=

*AS BUILT 4/22/92 RJM
ACCOUNT NO. 30-575-283-06

R-3143

SHEET 12 OF 16

INDEXED 11-20-91 4H

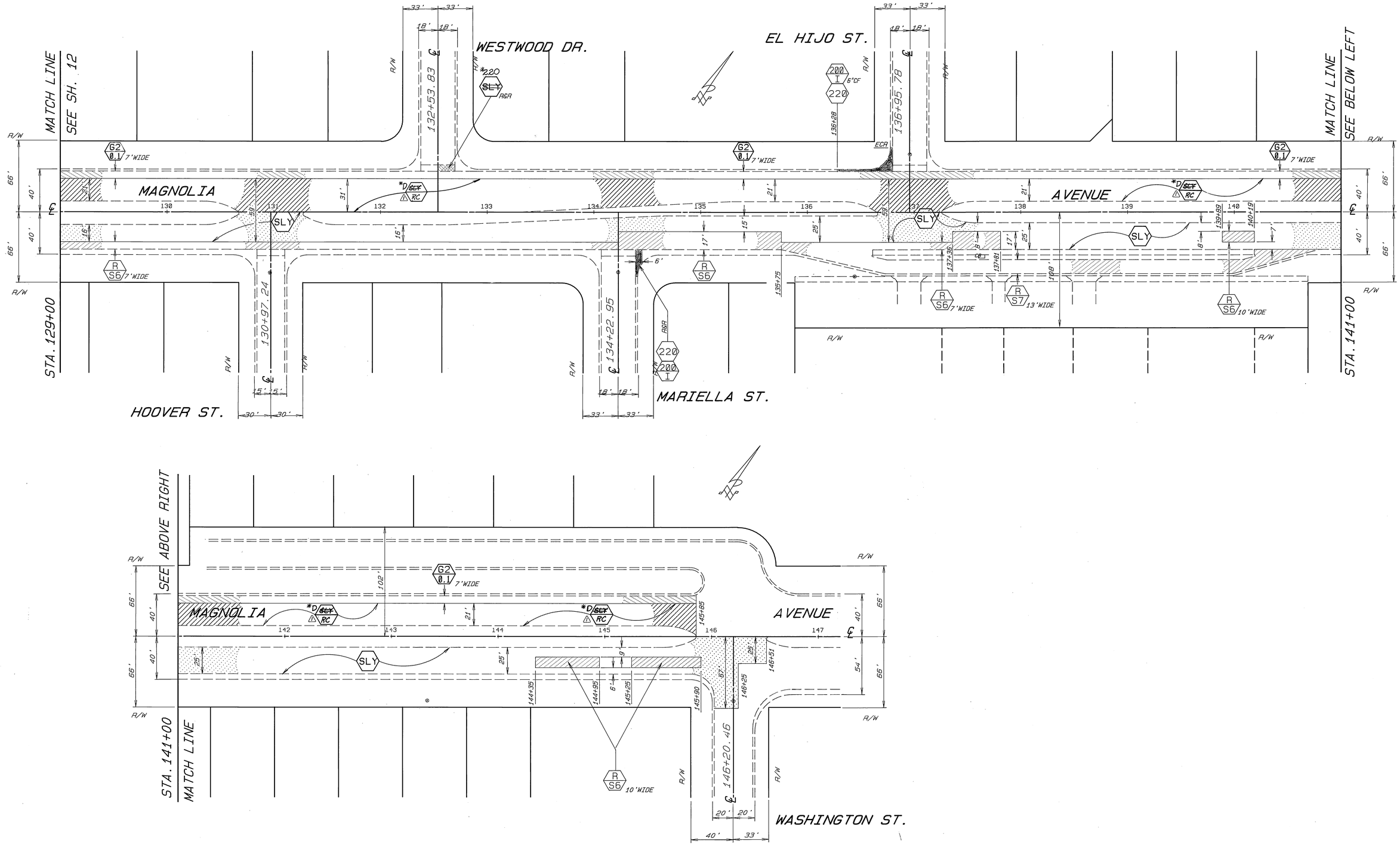

MARK	REVISIONS	APPR.	DATE
△	ADDED RUBBER CHIP TO SLURRY AREA IN WEST-BOUND BARREL	RCM	7/3/91

DESIGNED BY SK DRAWN BY CS RJM CHECKED BY RCM

APPROVED BY	DATE	BY
PRINCIPAL ENGINEER	6/25/91	
CHIEF P.W. ENGINEER	6/26/91	
CHIEF P.W. INSPECTOR	7-2-91	
SURVEYOR		
TRAFFIC DIVISION	6-25-91	
STREET SERVICES		

REGISTERED PROFESSIONAL ENGINEER — RICHARD C. MILLER — No. 29510 — Expires: 3-31-95 — CIVIL — STATE OF CALIFORNIA

CITY OF RIVERSIDE
PUBLIC WORKS DEPARTMENT

APPROVED BY _____
PUBLIC WORKS DIRECTOR
DATE 6/27/91

REHABILITATION OF MAJOR CITY STREETS 89-90

MAGNOLIA AVENUE JACKSON TO WASHINGTON

HORIZ. SCALE: 1"= 40' VERT. SCALE: 1"=

*AS BUILT 4/22/92 RJM

ACCOUNT NO. 30-575-269-06

R-3143

SHEET 13 OF 16

INDEXED 11-20-91 GH

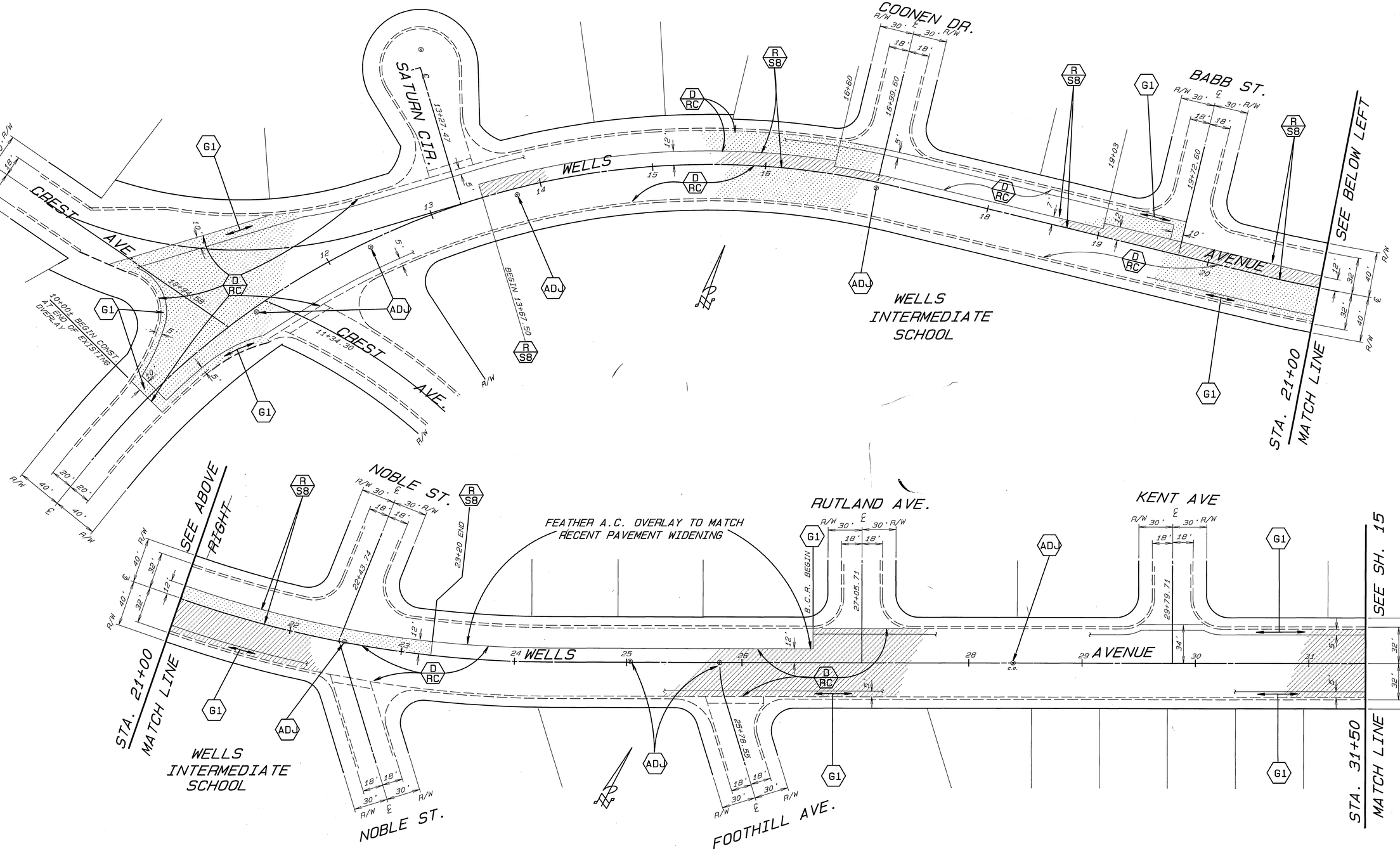

QUANTITIES FOR WELLS AVE

ITEM	QUANTITY	ITEM	QUANTITY
OPEN GRADED A.C.	———	TRAFFIC SIGNAL LOOPS	2 EA.
DENSE GRADED A.C.	2843 TONS	BLUE FIRE HYDRANT MARKERS	12 EA
ASPHALT RUBBER S.A.T.	34,621 SY	R&R C&G.200I,6"C.F.	125 LF
A.C.PVMT. GRINDING,TYPE I	10,707 LF	R&R SIDEWALK STD.DWG.325	452 SF
EXCAVATION, A.C.&BASE	2649 CY	R&R X-GUTTER & SPANDREL	553 SF
CRUSHED AGGREGATE BASE	2311 CY	CONST SIDEWALK STD.DWG.325	480 SF
ADJUST SWR.& S.D.M.H.	24 EA.	TACK COAT UNDER ARSAT	1731 GAL
FRAME & COVER TO GRADE		⊕ PAVEMENT PREPARATION	
ADJUST WATER GATE VALVE	46 EA.	ASPHALT CONCRETE REMOVAL	224 CY
COVER TO GRADE		D.G.A.C. REPLACEMENT	453 TONS
CRACK SEALING	17,800 LF		

REGISTERED PROFESSIONAL ENGINEER — RONALD C. MILLER — No: 29910 — Expires: 3-31-95 — CIVIL — STATE OF CALIFORNIA

MARK	REVISIONS	APPR.	DATE

DESIGNED BY SK DRAWN BY CS CHECKED BY RCM

CITY OF RIVERSIDE
PUBLIC WORKS DEPARTMENT

	DATE	BY
APPROVED BY		
PRINCIPAL ENGINEER	6/27/91	RCM
CHIEF P.W. ENGINEER	6/27/91	RCM
CHIEF P.W. INSPECTOR	7-2-91	RSK
SURVEYOR		
TRAFFIC DIVISION	6-25-91	JC
STREET SERVICES	7-2-91	RB

APPROVED BY
PUBLIC WORKS DIRECTOR
DATE 6/27/91

REHABILITATION OF MAJOR CITY STREETS 89-90
WELLS AVENUE
CREST AVE TO VAN BUREN

HORIZ. SCALE: 1"= 40'

AS BUILT 4/22/92 RCM
ACCOUNT NO. 30-575-263-06

A-3143

SHEET 14 OF 16

INDEXED 11-20-91 GH

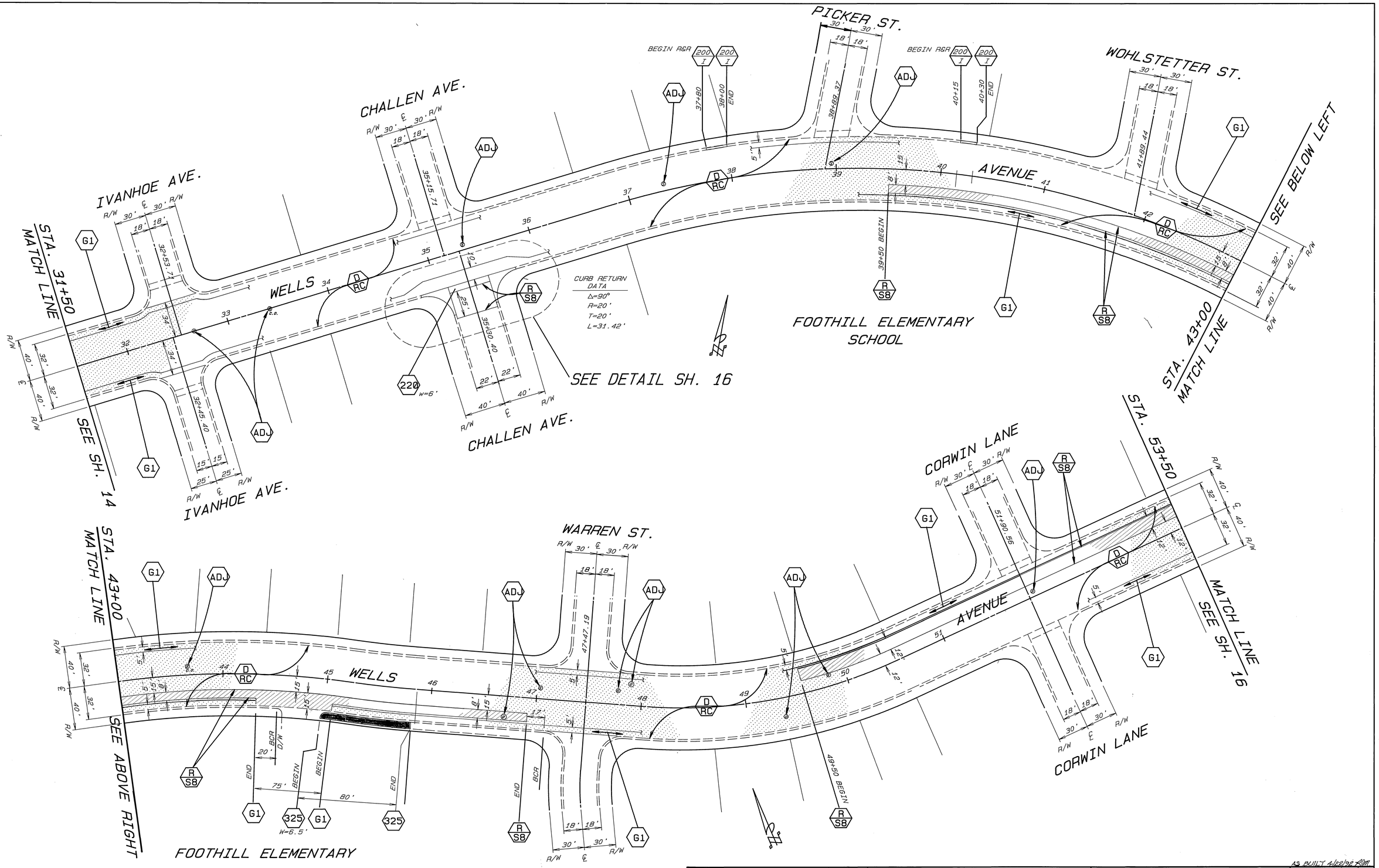

MARK	REVISIONS	APPR.	DATE

DESIGNED BY SK DRAWN BY CS CHECKED BY RCM

REGISTERED PROFESSIONAL ENGINEER
RONALD C. MOELLER
NO. 29510
Expires: 9-31-95
CIVIL
STATE OF CALIFORNIA

CITY OF RIVERSIDE
PUBLIC WORKS DEPARTMENT

APPROVED BY	DATE	BY
PRINCIPAL ENGINEER	6/25/91	
CHIEF P.W. ENGINEER	6/27/91	
CHIEF P.W. INSPECTOR	7-2-91	
SURVEYOR		
TRAFFIC DIVISION	6-25-91	
STREET SERVICES	6-24-91	

APPROVED BY
PUBLIC WORKS DIRECTOR
DATE 6/27/91

REHABILITATIOM OF MAJOR CITY STREETS 89-90

WELLS AVENUE
CREST AVE TO VAN BUREN

HORIZ. SCALE: 1"= 40' VERT. SCALE: 1"= 4'

AS BUILT 4/22/92 RCM
ACCOUNT NO. 30-575-283-06

R-3143

SHEET 15 OF 16

INDEXED 11-20-91 KH

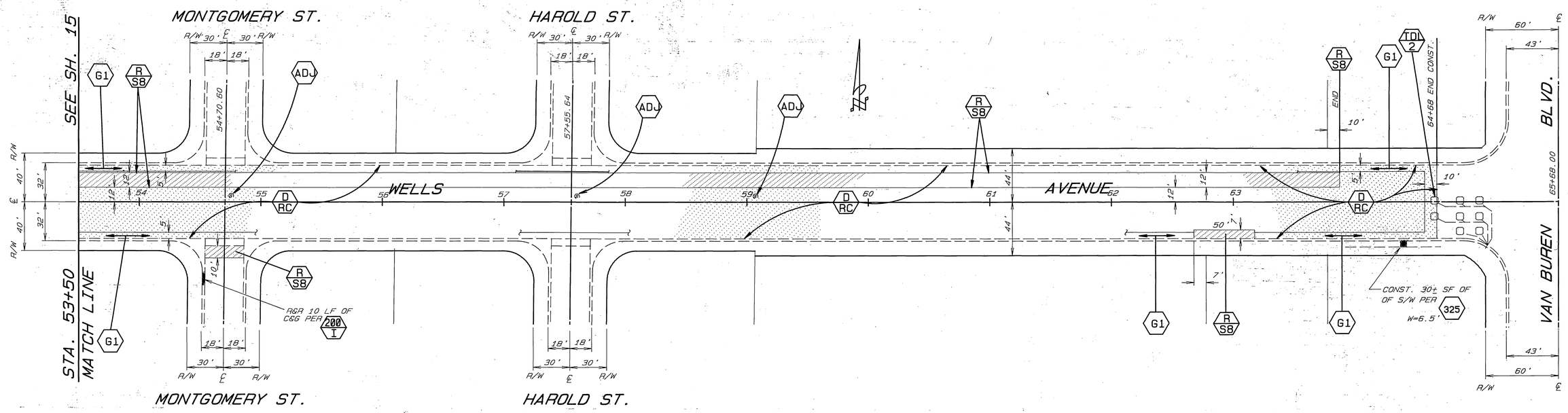

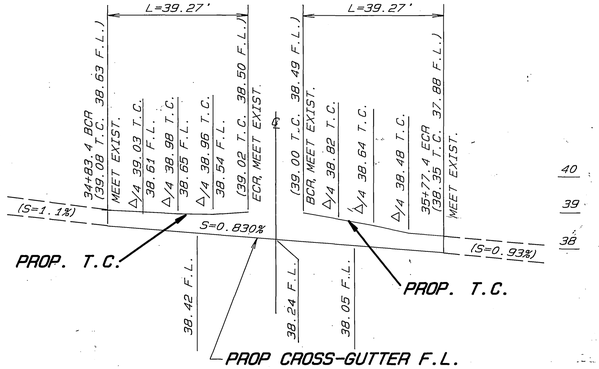

BENCHMARK

P.K. NAIL IN N.E. CURB RETURN AT WELLS AVE. AND CHALLEN AVE. ELEV. 738.69

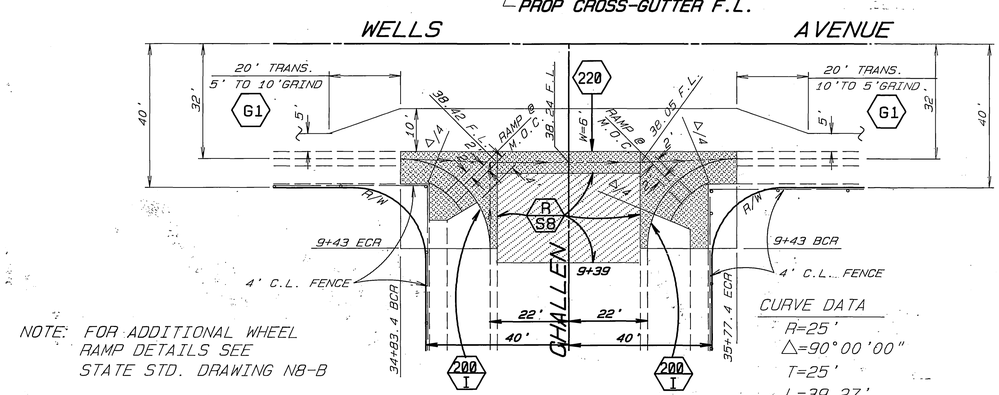

NOTE: FOR ADDITIONAL WHEEL RAMP DETAILS SEE STATE STD. DRAWING N8-B

CURVE DATA
R=25'
Δ=90°00'00"
T=25'
L=39.27'

CURB RETURN DETAIL @ CHALLEN

SCALE: 1"=20'

REGISTERED PROFESSIONAL ENGINEER — RONALD C. MILLER — NO. 29510 — Exp. 2-31-93 — CIVIL — STATE OF CALIFORNIA

MARK	REVISIONS	APPR.	DATE

DESIGNED BY SK DRAWN BY CS CHECKED BY ACM

CITY OF RIVERSIDE
PUBLIC WORKS DEPARTMENT

	APPROVED BY	DATE	BY
	PRINCIPAL ENGINEER	6/25/91	
	CHIEF P.W. ENGINEER	6/26/91	
	CHIEF P.W. INSPECTOR	6-27-91	
	SURVEYOR	6-27-91	
	TRAFFIC DIVISION	6-27-91	
	STREET SERVICES	6-27-91	

APPROVED BY
PUBLIC WORKS DIRECTOR
DATE 6/27/91

REHABILITATION OF MAJOR CITY STREETS 89-90

WELLS AVENUE
CREST AVE TO VAN BUREN

HORIZ. SCALE: 1"= 40'

AS BUILT 4/22/92 RMM

ACCOUNT NO. 30-575-263-06

R-3143

SHEET 16 OF 16

INDEXED 11-20-91 GH