CONSTRUCTION LEGEND

CENTERLINE —— ℄ —— TOP OF SLOPE

RIGHT-OF-WAY LINE —— R/W —— TOE OF SLOPE

SUBDIVISION LOT LINE —— P/L —— DIRECTION OF FLOW

CONSTRUCT VARIABLE THICKNESS A.C. OVERLAY

CONSTRUCT STRUCTURAL SECTION OF 0.30' A.C. OVER 1.33' CRUSHED AGGREGATE BASE, OR 0.87' FULL DEPTH A.C.

SPECIAL CONSTRUCTION NOTES

NUMBERS ABOVE 100 IN A HEXAGON ON THE PLAN REFER TO THE RESPECTIVE STANDARD DRAWING AND SHALL BE CONSTRUCTED ACCORDINGLY, UNLESS MODIFICATIONS ARE NOTED ON THE PLAN. ANY NUMBER SHOWN BELOW THE STANDARD DRAWING NUMBER INDICATES THE SPECIFIC ALTERNATE TO BE CONSTRUCTED.

R/I — REMOVE ENTIRE TREE. CLASS IS SHOWN ON PLAN.
CLASS I 6" TO 18" DIA.
CLASS II OVER 18" TO 36" DIA.
CLASS III OVER 36" DIA.

T/II — TRANSPLANT TREES TO LOCATIONS SHOWN ON THE PLAN OR AS DIRECTED BY THE PARK DEPARTMENT. SIZE CLASSES ARE THE SAME AS TREE REMOVAL.

W — TO BE SALVAGED, REMOVED, RELOCATED, ... INSTALLED OR ABANDONED BY OTHERS
E — PUBLIC UTILITIES, ELECTRIC DIVISION
W — PUBLIC UTILITIES, WATER DIVISION
G — SOUTHERN CALIFORNIA GAS COMPANY
T — PACIFIC TELEPHONE COMPANY

A/I — DETAIL / SHEET

JS229, M803 — RIVERSIDE COUNTY FLOOD CONTROL AND WATER CONSERVATION DISTRICT STANDARD DRAWINGS.

GENERAL CONSTRUCTION NOTES

1. EXISTING UTILITIES SHOWN ON THIS PLAN ARE PLOTTED FROM UTILITY RECORDS. THE CONTRACTOR IS REQUIRED TO TAKE DUE PRECAUTIONARY MEASURES TO LOCATE AND PROTECT ALL UTILITIES WHETHER OR NOT SHOWN ON THIS PLAN. IF THE COVER OF A UTILITY IS KNOWN IT IS SHOWN IN THE PROFILE. UTILITIES SHOWN IN THE PROFILE AS <=> ? INDICATES THAT COVER IS UNKNOWN, BUT THE UTILITY IS NOT EXPECTED TO CONFLICT WITH THE PROPOSED IMPROVEMENTS.
2. ALL ELEVATIONS SHOWN ON THE PLAN SHALL BE STAKED IN THE FIELD.
3. CONNECTION TO EXISTING 8'x3' CONCRETE BOX CULVERT AT UNIVERSITY AVE. SHALL NOT BE MADE, AND GRADE SHEETS SHALL NOT BE ISSUED, UNTIL THE EXIST. CULVERT HAS BEEN EXPOSED AND FLOWLINE ELEVATION DETERMINED.
4. FOUR (4) EXISTING FICUS TREES ON UNIVERSITY AVE. SHALL BE RELOCATED WITH A MINIMUM SIXTY (60) INCH BOX SIZE ROOT BALL.
5. ALL LANDSCAPE RELATED WORK SHALL CONFORM TO THE CITY OF RIVERSIDE, PARK AND RECREATION DEPARTMENT STANDARDS.
6. CONTACT PARK PROJECTS INSPECTOR A MINIMUM OF 48 HOURS IN ADVANCE AT 787-7223 TO SCHEDULE INSPECTIONS. INSPECTIONS SHALL BE REQUIRED: a) WHEN PLANT LOCATIONS HAVE BEEN SPOTTED IN THE FIELD PRIOR TO DIGGING PLANT PITS, b) WHILE DIGGING PLANT PITS AND PLANTING/RELOCATING TREES, c) AFTER PLANTING AND ALL OTHER INDICATED OR SPECIFIED WORK HAS BEEN COMPLETED FOR START OF MAINTENANCE, AND d) AT END OF MAINTENANCE / FINAL ACCEPTANCE (DEVELOPER WILL BE RELEASED FROM MAINTENANCE ONLY UPON RECEIPT OF WRITTEN NOTIFICATION FROM THE CITY THAT THE PARK AND RECREATION DEPARTMENT IS ASSUMING MAINTENANCE RESPONSIBILITIES).
7. THE DEVELOPER SHALL MAINTAIN ALL PLANTINGS FOR A MINIMUM PERIOD OF ONE (1) YEAR.
8. THESE PLANS ARE FOR CONSTRUCTION OF IMPROVEMENTS WITHIN THE PUBLIC RIGHT OF WAY ONLY. FOR ON-SITE IMPROVEMENTS SEE "MULTI-MODAL TRANSPORTATION CENTER, GRADING PLAN C-1" BY HAWKINS, ROBERTSON, & ASSOC., DATED 7/30/82. *ONSITE AND OFFSITE WORK TO BE CONSTRUCTED UNDER SEPARATE CONTRACTS. ALL INTERFACING IMPROVEMENT WORK TO BE COORDINATED BY RESPECTIVE CONTRACTORS.*

GENERAL STREET LIGHT CONST. NOTES

1. INSTALL ALL STREET LIGHT FACILITIES AS SHOWN IN ACCORDANCE WITH THE PLANS, STANDARD PLANS AND THE LATEST REVISION OF THE CITY OF RIVERSIDE PUBLIC UTILITIES DEPARTMENT STREET LIGHT SPECIFICATION No. 119.
2. CONTACT PUBLIC UTILITIES STREET LIGHT INSPECTOR, PHONE No. 787-7429, FOR REQUIRED INSPECTIONS.
3. EXCAVATION FOR ELECTROLIER FOUNDATIONS, PULLBOXES, AND CONDUITS MUST BE DONE AFTER INSTALLATION OF CURBS & GUTTERS, BUT BEFORE INSTALLATION OF SIDEWALKS. FOUNDATION LOCATIONS SHALL BE APPROVED BY THE ENGINEER PRIOR TO EXCAVATION.
4. INSTALL A WATERPROOF "IN LINE" FUSE HOLDER IN BOTH BRANCH CONDUCTORS IN THE BASE OF EACH STREET LIGHT STANDARD. FUSE HOLDER TO BE "BUSSMAN TRON" #HEB, COMPATIBLE WITH SIZE & TYPE OF WIRE USED, WITH A "BUSSMAN FNM" 5 AMP, 240 VOLT FUSE OR APPROVED EQUAL.
5. ALL SERVICE POINTS TO BE CONNECTED BY THE CITY OF RIVERSIDE.
6. MARK INSTALLATION DATE ON PHOTO CONTROLS AND LAMPS AS PROVIDED FOR BY THE MANUFACTURERS.

TRAFFIC SIGNAL CONSTRUCTION NOTES

1. TRAFFIC SIGNAL WORK SHALL BE IN ACCORDANCE TO THE PROVISIONS OF SECTION 86 OF THE STATE STANDARD SPECIFICATIONS DATED JANUARY, 1981, THE STATE STANDARD PLANS, ALSO DATED JANUARY, 1981, AND AS DIRECTED BY THE TRAFFIC ENGINEER.
2. CONTACT TRAFFIC SIGNAL MAINTENANCE SHOP (714) 787-7576 FOR INSPECTION OF TRAFFIC SIGNAL WORK.

STREET LIGHT LEGEND

1 — EXIST. ELECTROLIER-SALVAGE STANDARD, TRANSFER LUMINAIRE TO NEW STANDARD, REMOVE & DISPOSE OF FOUNDATION.

2 — EXIST. ELECTROLIER-SALVAGE STANDARD & LUMINAIRE.

3 — EXIST. ELECTROLIER-RELOCATE TO NEW FOUNDATION PER ITEM No. S-4, UGS-800 & 801.

INSTALL CONCRETE STANDARD, 31'-3" PER ITEM NO. S-8 & TRANSFERRED LUMINAIRE PER UGS-800 & 801.

S.L. — INSTALL 1" H.D.G. RIGID GALV. STEEL CONDUIT WITH 2 #8 CU. 600 V. CABLES.

INSTALL STREET LIGHT PULLBOX PER ITEM No. P-1 OF UGS-800.

S.L. — EXIST. STREET LIGHT CONDUIT TO REMAIN.

(S.L.) — EXIST. STREET LIGHT CONDUIT TO BE ABANDONED & REMOVED.

4 — ROUTE EXIST. STREET LIGHT CONDUIT INTO PULLBOX, REPLACE 2 #8 CU. 600 V. CABLES AS REQUIRED.

5 — RELOCATE EMBEDDED ELECTROLIER TO 0+75 ON CHESTNUT ST. ROUTE EXIST. CONDUIT TO NEW LOCATION. REPLACE 2 #8 CU. 600 V. CABLES AS REQUIRED. (SEE SHEET 3)

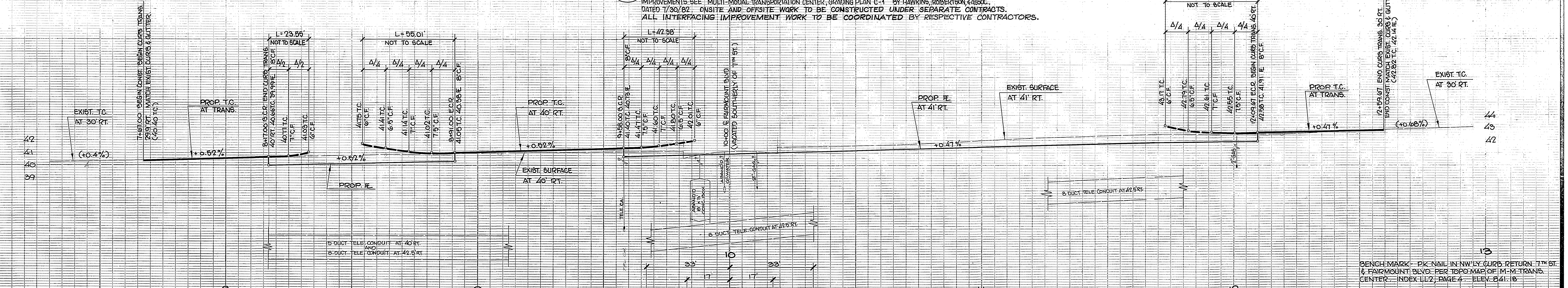

BENCH MARK - PK NAIL IN NW'LY CURB RETURN 7TH ST. & FAIRMOUNT BLVD. PER TOPO MAP OF M-M TRANS. CENTER. INDEX LL2, PAGE 4. ELEV. 841.18

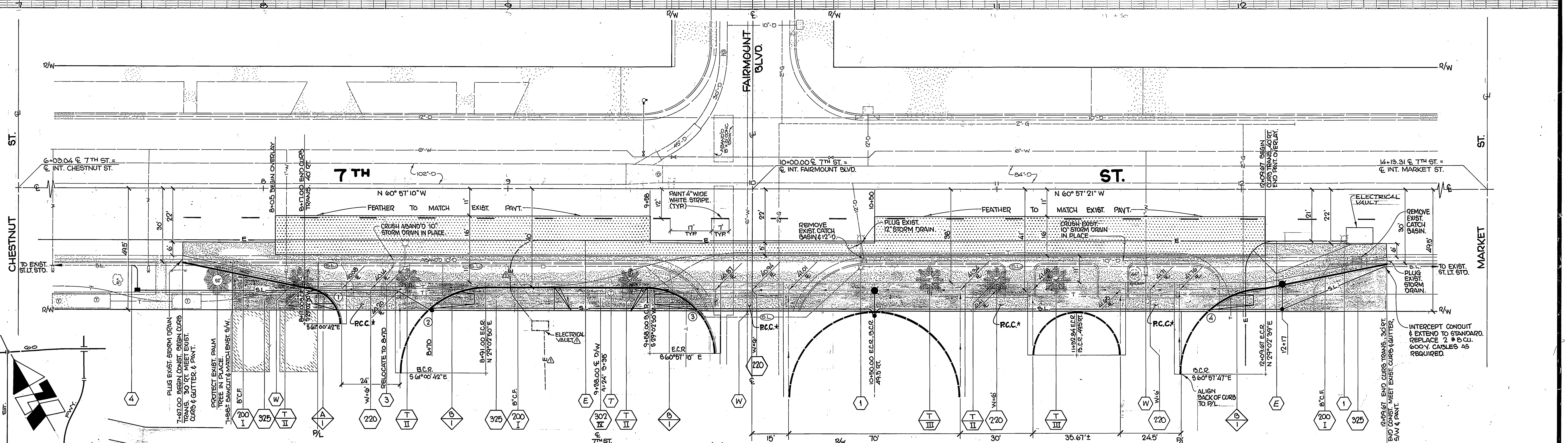

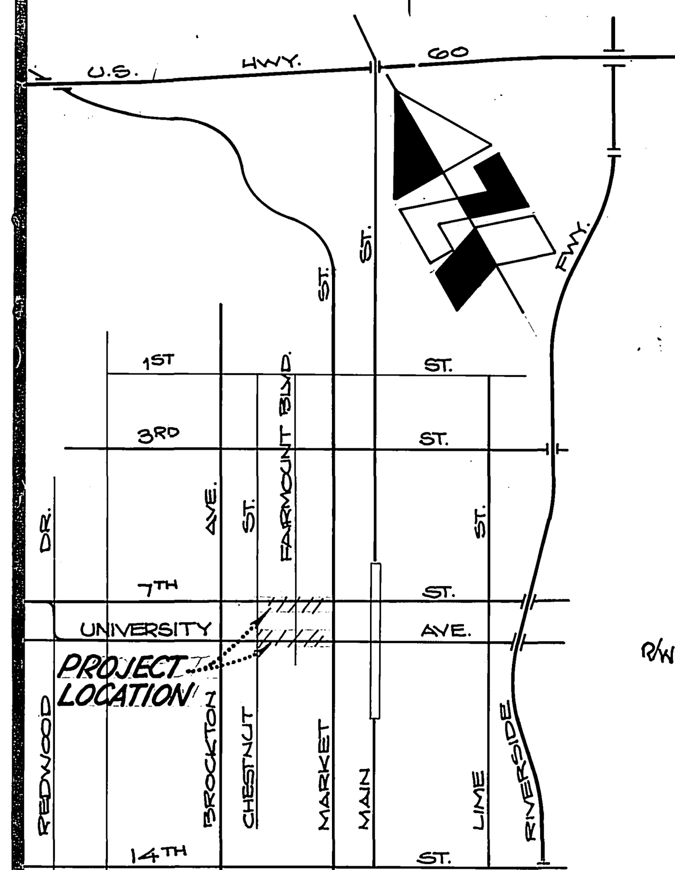

PROJECT LOCATION MAP
SCALE: 1" = 1600'

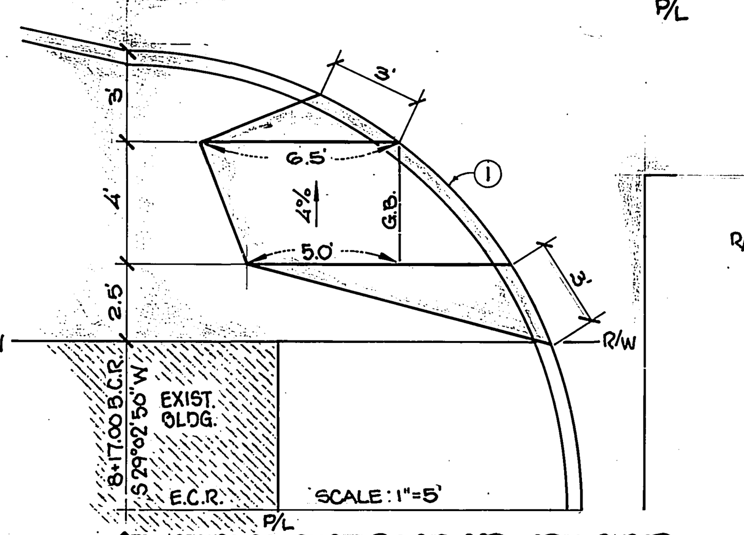

A/1 WHEELCHAIR RAMP DETAIL AT 8+28± RT.

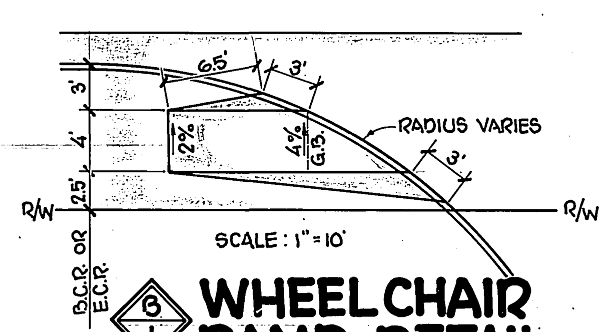

B/1 WHEELCHAIR RAMP DETAIL (TYPICAL)

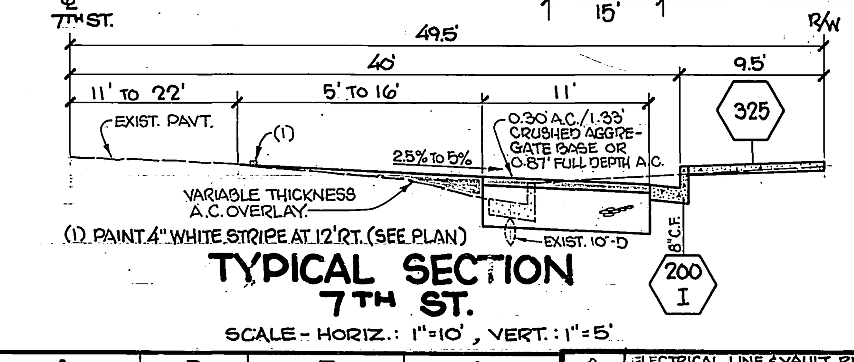

TYPICAL SECTION 7TH ST.
SCALE - HORIZ.: 1" = 10', VERT.: 1" = 5'

CURVE	Δ	R	T	L
1	89°56'28"	15'	14.99'	23.55'
2	90°03'32"	35'	35.04'	55.01'
3	90°00'00"	27'	27.00'	42.41'
4	90°00'26"	35'	35.00'	54.98'

MARK	REVISIONS	APPR.	DATE
△	ELECTRICAL LINE & VAULT RELOCATION. 'AS BUILT' PER CITY ELECTRICAL DEPARTMENT.	JHC	10/13/8?

DESIGNED BY B/M DRAWN BY SK CHECKED BY RCM CWS

CITY OF RIVERSIDE
PUBLIC WORKS DEPARTMENT

APPROVED BY	DATE	BY
PRINCIPAL ENGINEER	9/29/82	JHC
PARK DEPARTMENT	9/21/82	BJ
TRAFFIC DIVISION	9/22/82	
CHIEF P. W. ENGINEER	9-28	
PUBLIC UTILITIES, ELECTRIC	9/2/82	

APPROVED BY [signature]
PUBLIC WORKS DIRECTOR
DATE 9/28/82

* AS BUILT SK 5/23/84

MULTI-MODAL TRANSPORTATION CENTER

7TH ST. BETWEEN CHESTNUT ST. & MARKET ST.

HORIZ. SCALE: 1" = 20' VERT. SCALE: 1" = 4'

INDEXED WF

ACCOUNT NO. 75-180-347

R-2470

SHEET 1 OF 3

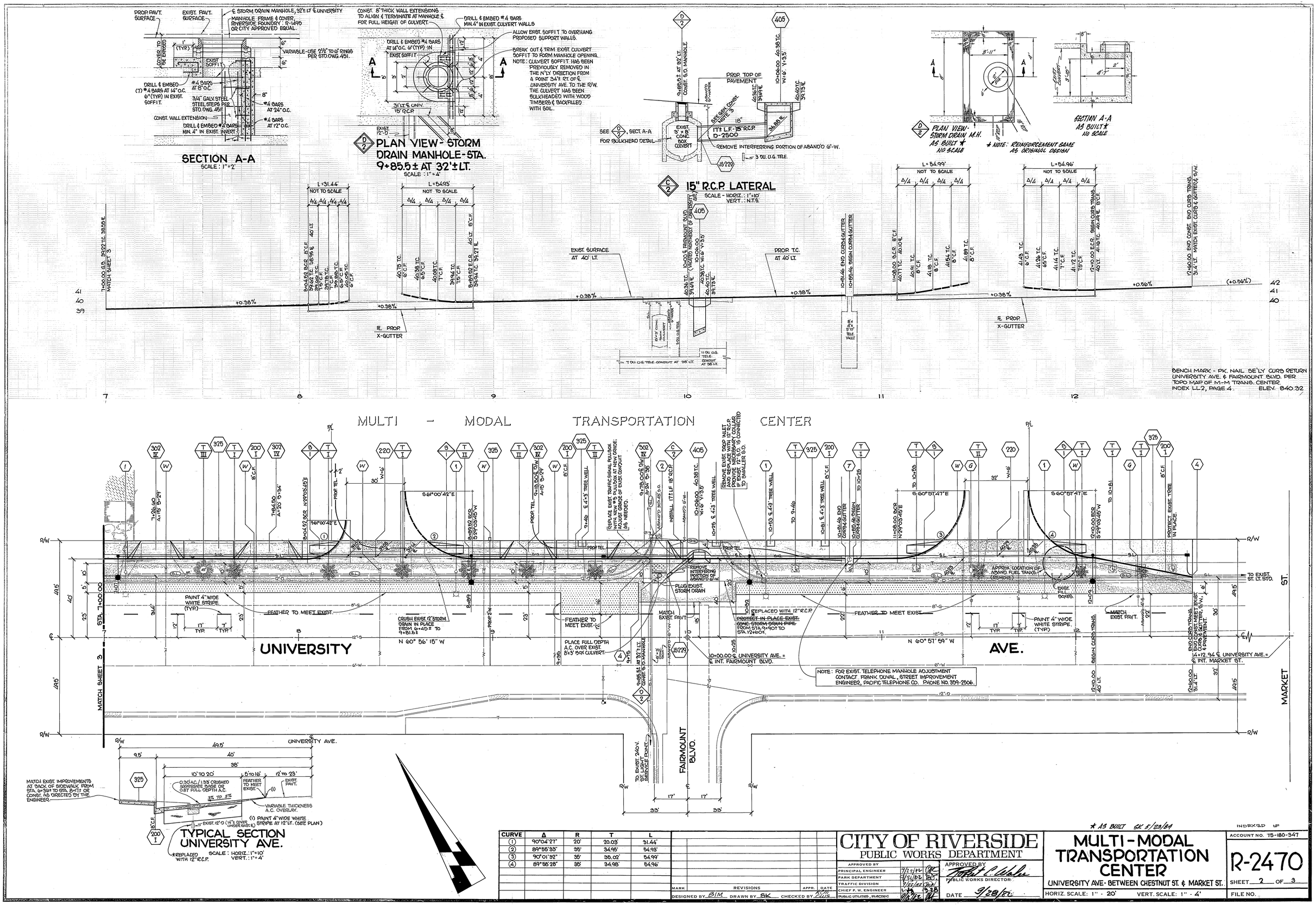

CURVE	Δ	R	T	L
1	90°04'27"	20'	20.03'	31.44'
2	89°55'33"	35'	34.95'	54.93'
3	90°01'32"	35'	35.02'	54.99'
4	89°58'28"	35'	34.98'	54.96'

MARK	REVISIONS	APPR.	DATE

DESIGNED BY BIM DRAWN BY SK CHECKED BY RCM CWS

CITY OF RIVERSIDE
PUBLIC WORKS DEPARTMENT

APPROVED BY		
PRINCIPAL ENGINEER	9/29/82	
PARK DEPARTMENT	9/21/82	
TRAFFIC DIVISION	9/28/82	
CHIEF P. W. ENGINEER		9.28
PUBLIC UTILITIES, ELECTRIC	9/28/82	

APPROVED BY Robert C. Wales
PUBLIC WORKS DIRECTOR
DATE 9/28/82

★ AS BUILT SK 5/23/84

INDEXED

MULTI-MODAL TRANSPORTATION CENTER
UNIVERSITY AVE - BETWEEN CHESTNUT ST. & MARKET ST.

HORIZ. SCALE: 1" - 20' VERT. SCALE: 1" - 4'

ACCOUNT NO. 75-180-347

R-2470

SHEET 2 OF 3

FILE NO.

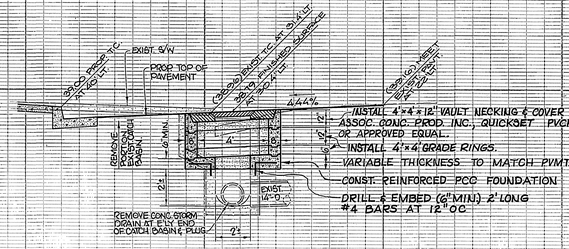

1 3

MANHOLE AT 6+42.6 UNIVERSITY

SCALE : 1"=4'

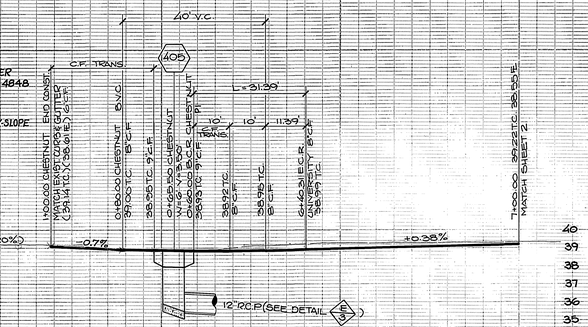

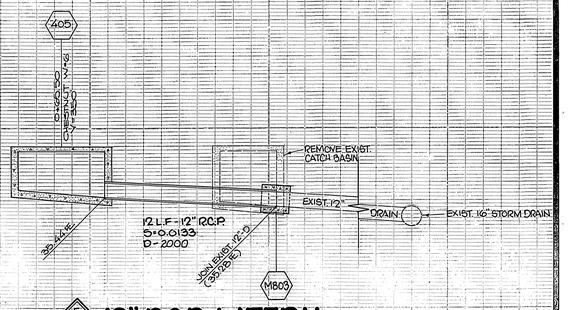

1 3

12" R.C.P. LATERAL

SCALE : 1"=5'

BENCH MARK - PK NAIL - SE'LY CURB RETURN UNIVERSITY AVE. & FAIRMOUNT BLVD. PER TOPO. MAP OF M-M TRANS. CENTER INDEX LL 2, PAGE 28 ELEV. 840.32

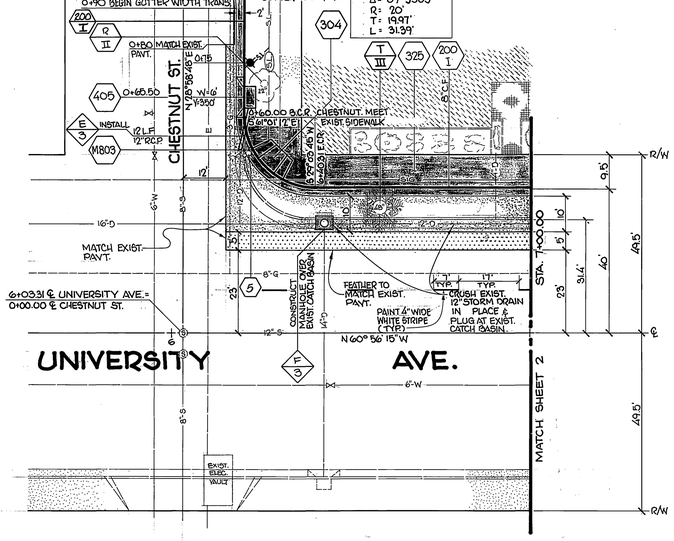

* AS BUILT SK 5/23/84

INDEXED LP

CITY OF RIVERSIDE
PUBLIC WORKS DEPARTMENT

APPROVED BY	DATE	BY
PRINCIPAL ENGINEER		
PARK DEPARTMENT		
TRAFFIC DIVISION	9/22/82	
C. E. ENGINEER	9-28-82	
PUBLIC UTILITIES, ELECTRIC	9/27/82	

APPROVED BY _____ PUBLIC WORKS DIRECTOR

DATE 9/28/82

MARK REVISIONS APPR. DATE

DESIGNED BY BIM DRAWN BY SK CHECKED BY BIM

MULTI-MODAL TRANSPORTATION CENTER

UNIVERSITY AVE.- FROM CHESTNUT ST. TO 100± N'LY
CHESTNUT ST. - FROM UNIVERSITY AVE. TO 100± N'LY

HORIZ. SCALE: 1" = 20' VERT. SCALE: 1" = 4'

ACCOUNT NO. 75-180-347

R-2470

SHEET 3 OF 3