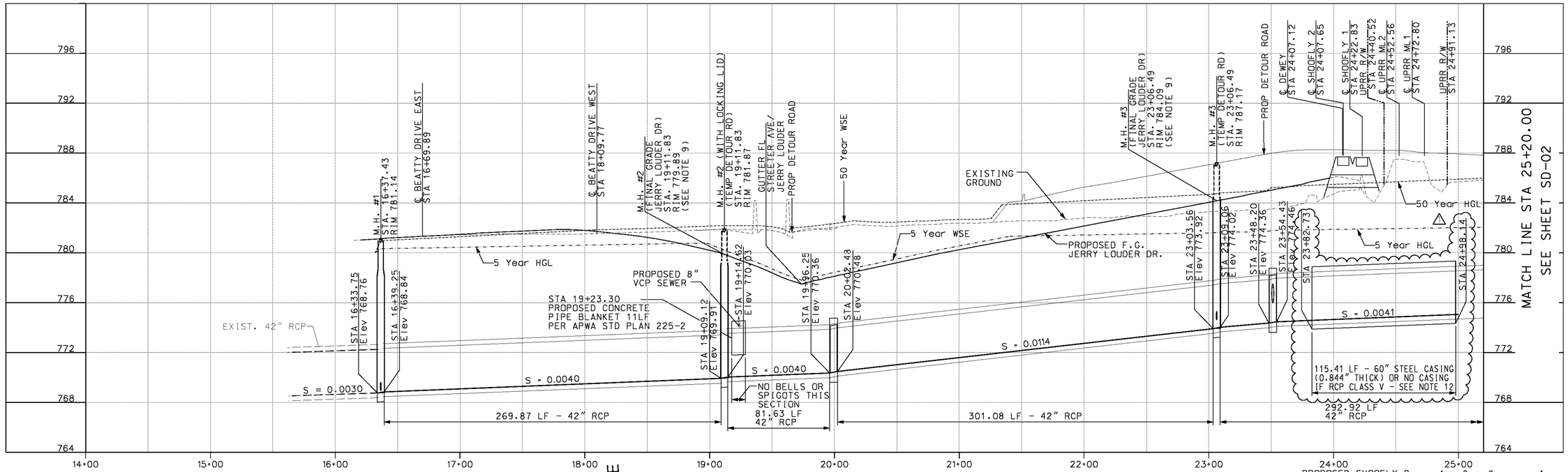

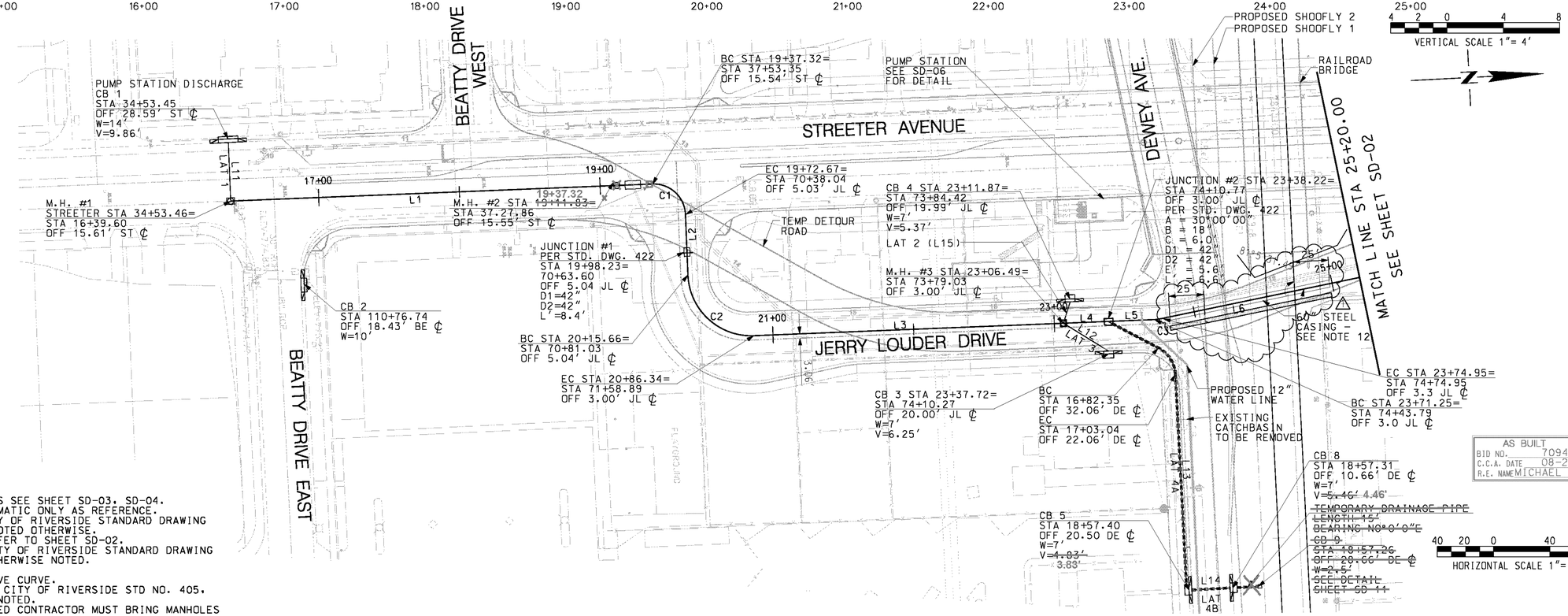

LATERAL STATION & OFFSETS *

LAT 1 - STA 16+37.43
STA 16+37.43 OFF 41.62'

LAT 2 - STA 23+06.49
STA 23+11.87 OFF 15.02'

LAT 3 - STA 23+06.49
STA 23+37.72 OFF 21.00'

LAT 4A - STA 23+38.22
STA 23+72.85 OFF 189.92'

LAT 4B - STA 23+73.20 OFF 193.66'
STA 23+85.06 OFF 197.13'

* 1. FOR STORM DRAIN GEOMETRY SEE TABLE 1 ON SHEET SD-02

2. ZERO OFFSETS NOT SHOWN

NOTE:

1. FOR THE STORM DRAIN LATERAL PROFILES SEE SHEET SD-03, SD-04.
2. STORM DRAIN LIFT STATION SHOWN SCHEMATIC ONLY AS REFERENCE.
3. ALL MANHOLES SHALL BE BUILT PER CITY OF RIVERSIDE STANDARD DRAWING NO. 430 (CURRENT EDITION), UNLESS NOTED OTHERWISE.
4. FOR LINE BEARINGS AND CURVE DATA REFER TO SHEET SD-02.
5. ALL JUNCTIONS SHALL BE BUILT PER CITY OF RIVERSIDE STANDARD DRAWING NO. 421(CURRENT EDITION), UNLESS OTHERWISE NOTED.
6. NOT USED
7. USE 5° BEVEL PIPE SEGMENTS TO ACHIEVE CURVE.
8. ALL CATCH BASINS SHALL BE BUILT PER CITY OF RIVERSIDE STD NO. 405, (CURRENT EDITION) UNLESS OTHERWISE NOTED.
9. ONCE TEMPORARY DETOUR ROAD IS REMOVED CONTRACTOR MUST BRING MANHOLES UP TO GRADE ON JERRY LOUDER DRIVE.
10. LOCAL DEPRESSIONS PER COUNTY OF RIVERSIDE STD. DRAWING LD201 (CASE C) (CURRENT EDITION) UNLESS OTHERWISE NOTED.
11. ALL REINFORCED CONCRETE PIPE (RCP) SHOULD BE CLASS IV, 2000-DLOAD U.O.N.
12. △ MIN CASING LENGTH SHALL BE 25' PERP. TO TK CL. AND 2' BEYOND TOE OF SLOPE AND 3'BEYOND DRAINAGE DITCH. STORM DRAIN CASING MAY BE OMITTED IF RCP CLASS V IS USED.

AS BUILT
BID NO. 7094
C.C.A. DATE 08-20-15
R.E. NAME MICHAEL WOLFF

IMPORTANT NOTICE
Section 4216/4217 of the Government Code requires a Dig Alert Identification Number to be issued before a "Permit to Excavate" will be valid. For your Dig Alert I.D. Number call
CALL TOLL FREE
48 HOURS BEFORE YOU DIG
UNDERGROUND SERVICE ALERT
1-800-227-2600

WILSON & COMPANY
625 E. CARNEGIE DRIVE SUITE 100
SAN BERNARDINO, CA 92408
(909) 806-8000
www.wilsonco.com

DATE 8-7-12

REGISTERED PROFESSIONAL ENGINEER — JAMES R. JAMES — No. 63769 — CIVIL — STATE OF CALIFORNIA

MARK	REVISIONS	APPR.	DATE
△	STEEL CASING UPGRADED/UPRR GUIDELINES	TBJ	08/12

DESIGNED BY TWF DRAWN BY SKB CHECKED BY JNH

CITY OF RIVERSIDE, CALIFORNIA
PUBLIC WORKS DEPARTMENT

STREETER AVENUE UNDERPASS

STORM DRAIN PLAN & PROFILE SD-01

HORIZ. SCALE: VERT. SCALE:

D-848
SHEET 89 OF 191
FILE NO.

DATE: 9/17/2012
TIME: 8:00:18 AM
USER = jacolgrove
SD001.sht

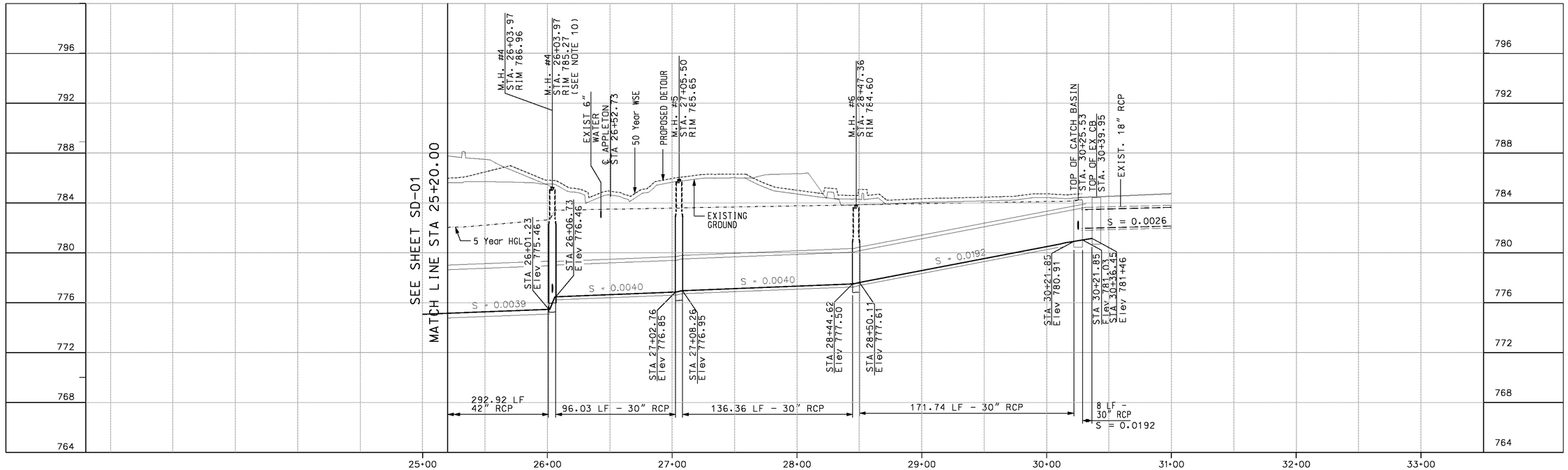

TABLE 1

NUMBER	BEARING	RADIUS	DELTA	LENGTH	TANGENT
L1	N0°40'59"E			299.90'	
L2	S89°18'32"E			42.99'	
L3	N0°41'50"E			220.15'	
L4	N0°41'50"E			41.74'	
L5	N0°41'50"E			23.02'	
L6	N8°43'43"W			154.46'	
L7	N0°10'46"E			67.56'	
L8	N0°10'46"E			101.53'	
L9	N29°13'05"W			141.78'	
L10	N0°35'38"E			192.67'	
L11	N89°19'1"W			41.62'	
L12	N34°36'36"E			37.64'	
L13	N89°59'30"E			149.97'	
L14	N0°0'0"E			27.43'	
C1		22.50'	90°00'19"	35.35'	22.50'
C2		45.00'	89°59'39"	70.68'	45.00'
C3		22.50'	9°25'32"	3.70'	1.85'
C4		45.00'	8°54'29"	7.00'	3.51'

LATERAL STATION & OFFSETS

LAT 5 - STA 26+17.99 OFF 162.03'
STA 26+49.44 OFF 179.93'

LAT 6 - STA 26+03.97
STA 26+17.99 OFF 162.03'

LAT 7 - STA 30+24.92
STA 30+38.58 OFF 57.15'28

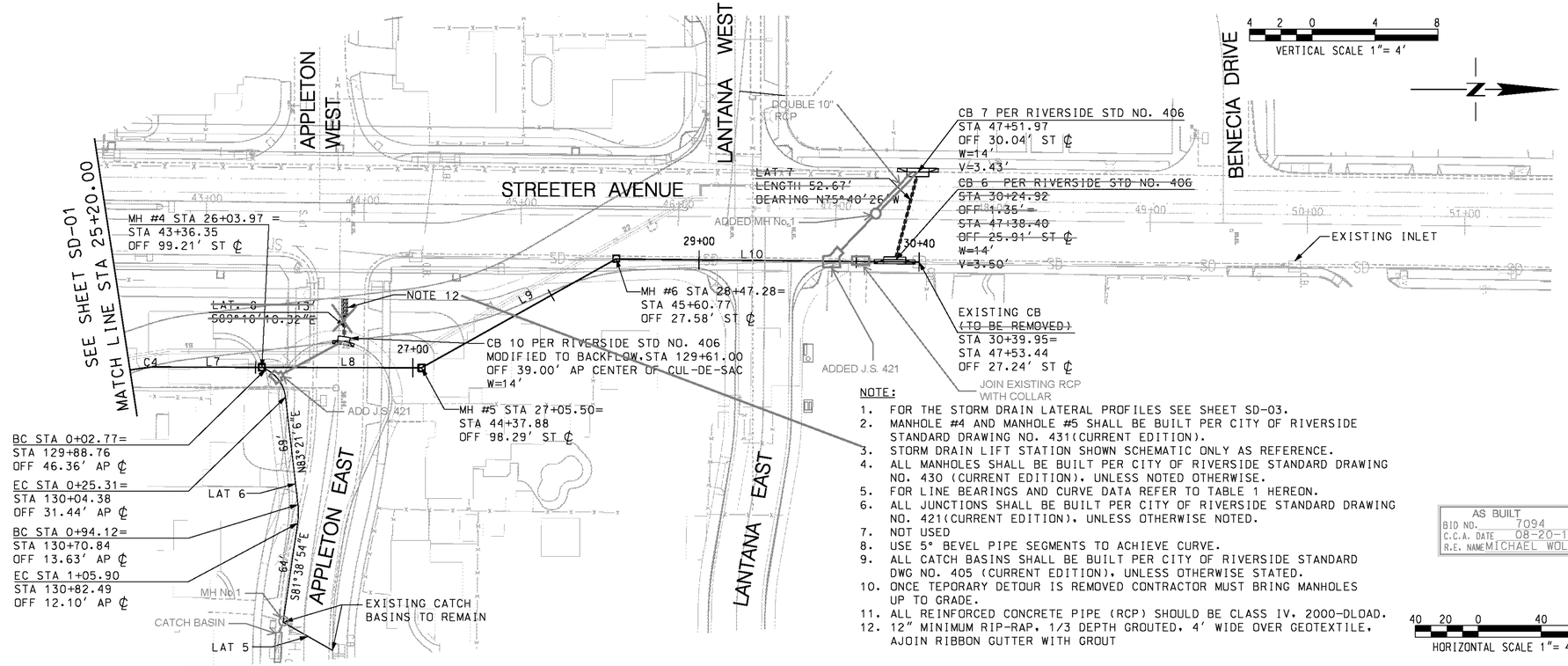

NOTE:

1. FOR THE STORM DRAIN LATERAL PROFILES SEE SHEET SD-03.
2. MANHOLE #4 AND MANHOLE #5 SHALL BE BUILT PER CITY OF RIVERSIDE STANDARD DRAWING NO. 431(CURRENT EDITION).
3. STORM DRAIN LIFT STATION SHOWN SCHEMATIC ONLY AS REFERENCE.
4. ALL MANHOLES SHALL BE BUILT PER CITY OF RIVERSIDE STANDARD DRAWING NO. 430 (CURRENT EDITION). UNLESS NOTED OTHERWISE.
5. FOR LINE BEARINGS AND CURVE DATA REFER TO TABLE 1 HEREON.
6. ALL JUNCTIONS SHALL BE BUILT PER CITY OF RIVERSIDE STANDARD DRAWING NO. 421(CURRENT EDITION). UNLESS OTHERWISE NOTED.
7. NOT USED
8. USE 5° BEVEL PIPE SEGMENTS TO ACHIEVE CURVE.
9. ALL CATCH BASINS SHALL BE BUILT PER CITY OF RIVERSIDE STANDARD DWG NO. 405 (CURRENT EDITION). UNLESS OTHERWISE STATED.
10. ONCE TEPORARY DETOUR IS REMOVED CONTRACTOR MUST BRING MANHOLES UP TO GRADE.
11. ALL REINFORCED CONCRETE PIPE (RCP) SHOULD BE CLASS IV. 2000-DLOAD.
12. 12" MINIMUM RIP-RAP. 1/3 DEPTH GROUTED. 4' WIDE OVER GEOTEXTILE. AJOIN RIBBON GUTTER WITH GROUT

AS BUILT
BID NO. 7094
C.C.A. DATE 08-20-15
R.E. NAME MICHAEL WOLFF

IMPORTANT NOTICE
Section 4216/4217 of the Government Code requires a Dig Alert Identification Number to be issued before a "Permit to Excavate" will be valid. For your Dig Alert I.D. Number call
CALL TOLL FREE
48 HOURS BEFORE YOU DIG
UNDERGROUND SERVICE ALERT
1-800-227-2600

WILSON & COMPANY
625 E. CARNEGIE DRIVE SUITE 100
SAN BERNARDINO, CA 92408
(909) 806-8000
www.wilsonco.com

DATE 8-7-12

REGISTERED PROFESSIONAL ENGINEER JAMES R. JAMES No. 63769 CIVIL STATE OF CALIFORNIA

MARK	REVISIONS	APPR.	DATE

DESIGNED BY MWP DRAWN BY SRB CHECKED BY JNH

CITY OF RIVERSIDE, CALIFORNIA
PUBLIC WORKS DEPARTMENT

STREETER AVENUE UNDERPASS

STORM DRAIN PLAN & PROFILE SD-02

D-848
SHEET 90 OF 191

HORIZ. SCALE: VERT. SCALE: FILE NO.

M:\#0PW09-400-139-00\CAD\SHEETS\SD002.shtt
DATE: 8/13/2012
TIME: 10:19:07 AM
USER = jmiong
SD002.shtt

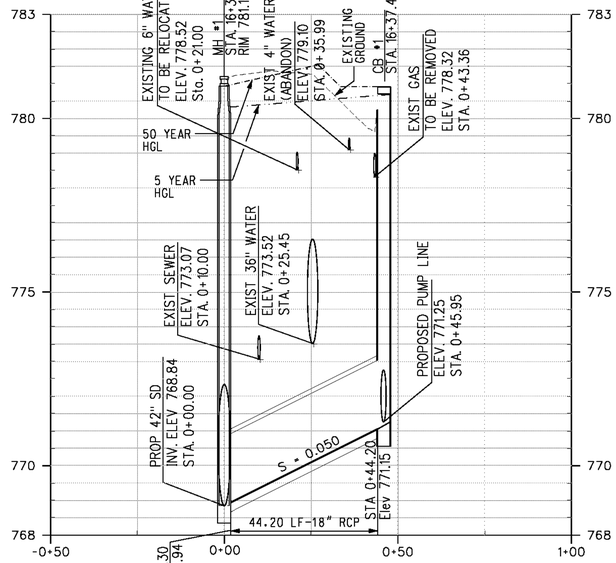

LATERAL 1

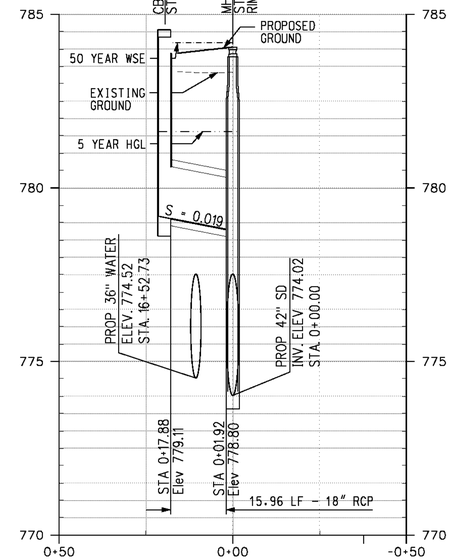

LATERAL 2

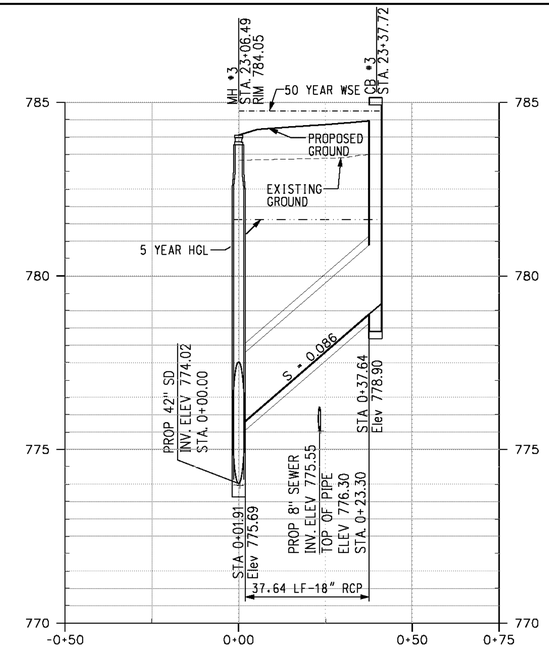

LATERAL 3

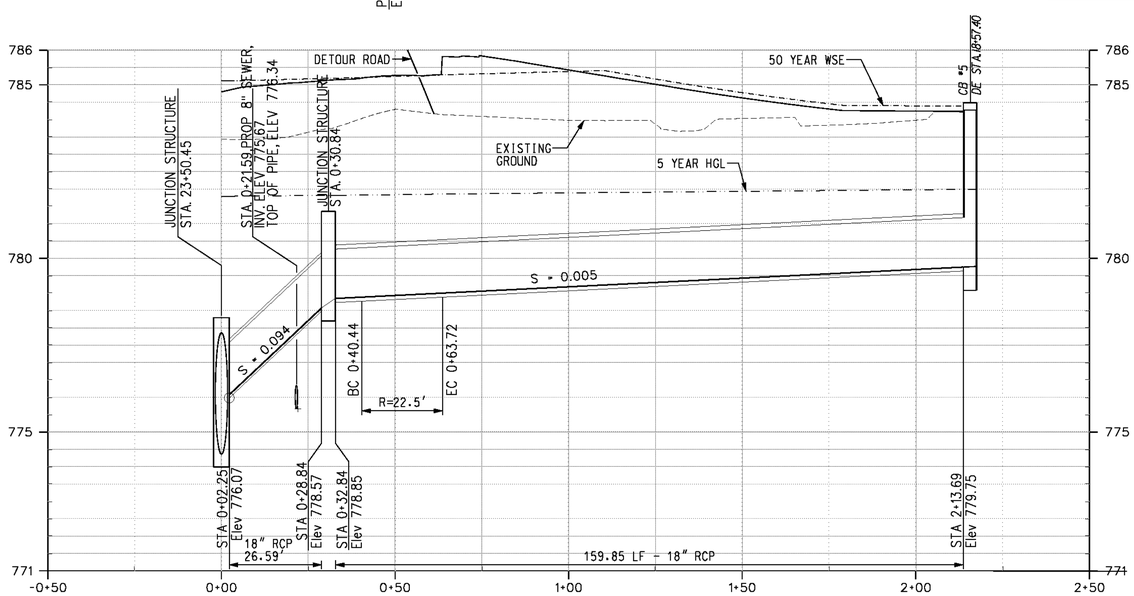

LATERAL 4A

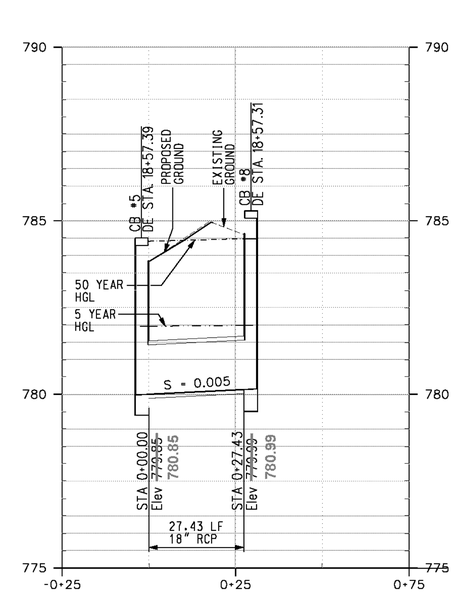

LATERAL 4B

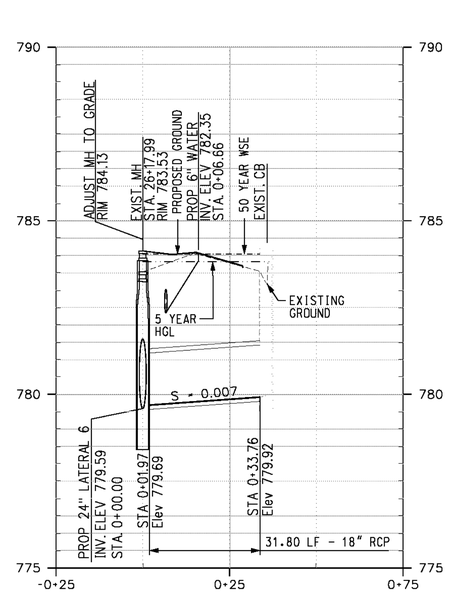

LATERAL 5

AS BUILT
BID NO. 7094
C.C.A. DATE 08-20-15
R.E. NAME MICHAEL WOLFF

HORIZONTAL SCALE 1"= 20'

VERTICAL SCALE 1"= 2'

IMPORTANT NOTICE
Section 4216/4217 of the Government Code requires a Dig Alert Ident/Option Number to be issued before a "Permit to Excavate" will be valid. For your Dig Alert I.D. Number call
CALL TOLL FREE
48 HOURS BEFORE YOU DIG
UNDERGROUND SERVICE ALERT
1-800-227-2600

WILSON & COMPANY
625 E. CARNEGIE DRIVE SUITE 100
SAN BERNARDINO, CA 92408
(909) 806-8000
www.wilsonco.com

DATE 8-7-12

REGISTERED PROFESSIONAL ENGINEER JAMES N. HOLLOWAY No. 63769 CIVIL STATE OF CALIFORNIA

MARK	REVISIONS	APPR.	DATE

DESIGNED BY MWP DRAWN BY SRB CHECKED BY JNH

CITY OF RIVERSIDE, CALIFORNIA
PUBLIC WORKS DEPARTMENT

STREETER AVENUE UNDERPASS

STORM DRAIN LATERAL PROFILES SD-03

HORIZ. SCALE: VERT. SCALE:

D-848
SHEET 91 OF 191
FILE NO.

DATE: 8/13/2012
TIME: 9:27:52 AM

USER = jmtong
SD003.dnt

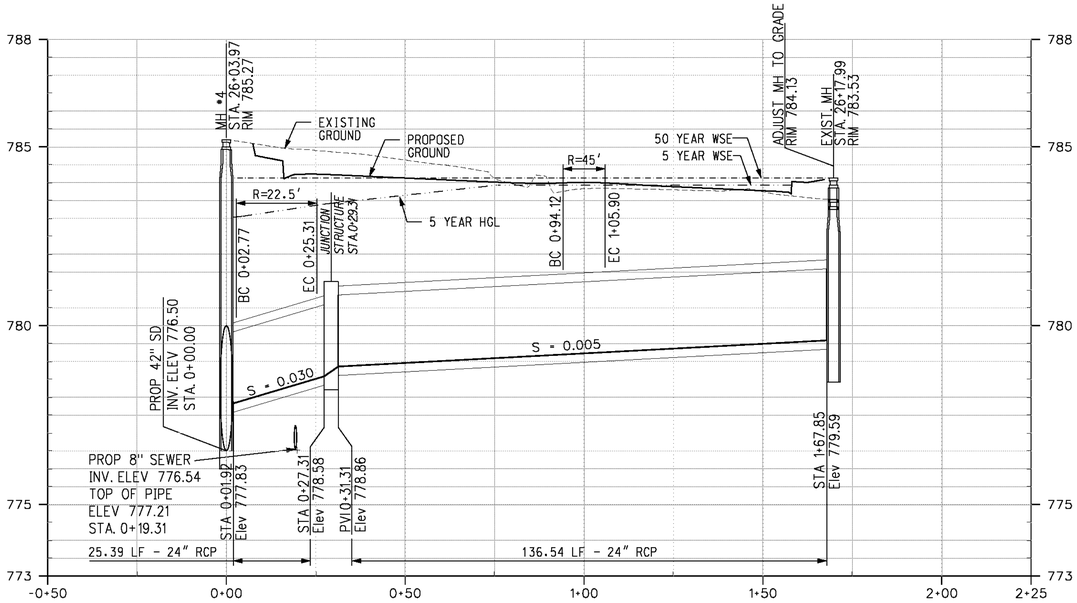

LATERAL 6

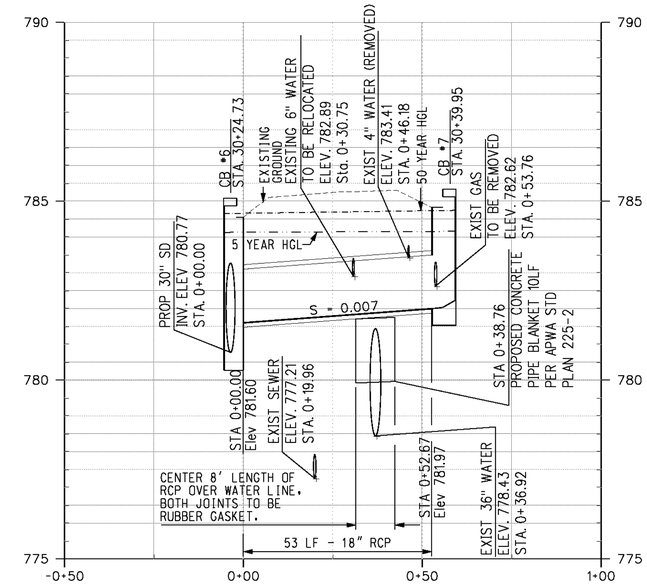

LATERAL 7

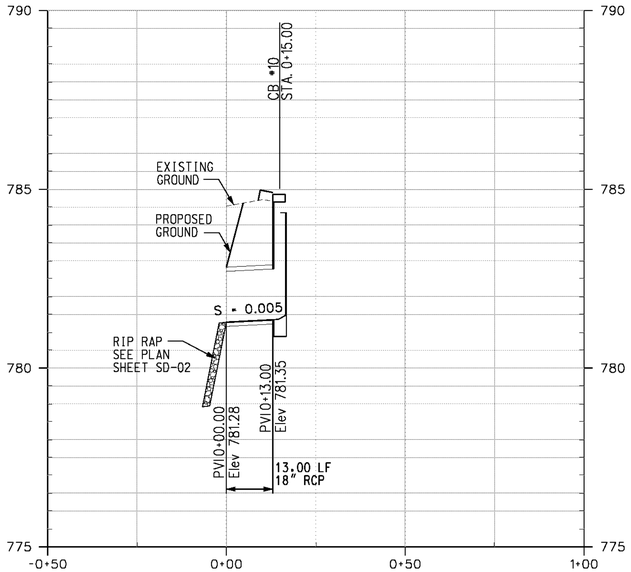

LATERAL 8

HORIZONTAL SCALE 1" = 20'

VERTICAL SCALE 1" = 2'

AS BUILT
(NO CORRECTIONS ON THIS SHEET)
BID No. 7094
C.C.A. DATE 08-20-15
R.E. NAME MICHAEL WOLFF

IMPORTANT NOTICE
Section 4216/4217 of the Government Code requires an operator of a gas or electric facility to be notified before an "Permit to Excavate" will be valid. For your Dig Alert I.D. Number call
CALL TOLL FREE
48 HOURS BEFORE YOU DIG
UNDERGROUND SERVICE ALERT
1-800-227-2600

WILSON & COMPANY
625 E. CARNEGIE DRIVE SUITE 100
SAN BERNARDINO, CA 92408
(909) 806-8000
www.wilsonco.com

DATE 8-7-12

REGISTERED PROFESSIONAL ENGINEER
JOHN E. HILL
No. 63799
CIVIL
STATE OF CALIFORNIA

MARK	REVISIONS	APPR.	DATE

DESIGNED BY PWP DRAWN BY SKD CHECKED BY JNH

CITY OF RIVERSIDE, CALIFORNIA
PUBLIC WORKS DEPARTMENT

STREETER AVENUE UNDERPASS

D-848

STORM DRAIN LATERAL PROFILES SD-04

SHEET 92 OF 191

HORIZ. SCALE: VERT. SCALE: FILE NO.

DATE: 8/7/2012
TIME: 10:19:58 AM

USER = altymchek
SD004.sht

M:\#08-400-139-00\acad\SHEETS\SD004.sht

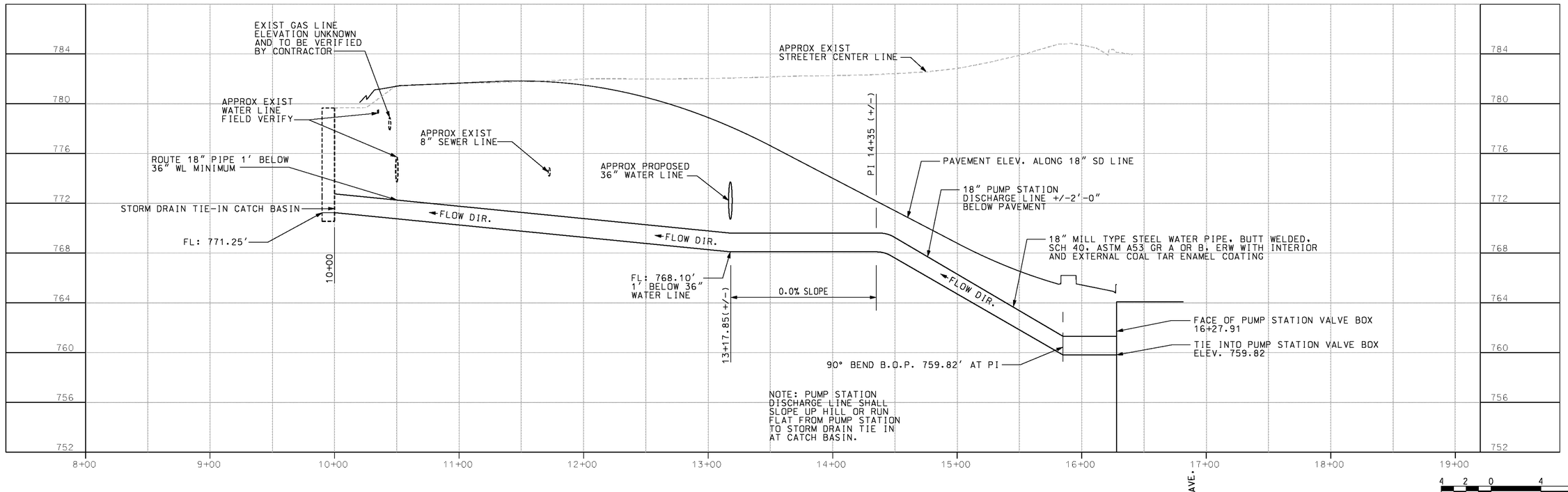

AS BUILT
BID NO. 7094
C.C.A. DATE 08-20-15
R.E. NAME MICHAEL WOLFF

IMPORTANT NOTICE
Section 4216/4217 of the Government Code requires a Dig Alert Identification Number to be issued before a "Permit to Excavate" will be valid. For your Dig Alert I.D. Number call
CALL TOLL FREE
48 HOURS BEFORE YOU DIG
UNDERGROUND SERVICE ALERT
1-800-227-2600

WILSON & COMPANY
625 E. CARNEGIE DRIVE SUITE 100
SAN BERNARDINO, CA 92408
(909) 806-8000
www.wilsonco.com

DATE 8-7-12

REGISTERED PROFESSIONAL ENGINEER
MARK W. WENTZEL
M 32687
EXP. 12-31-2012
MECHANICAL
STATE OF CALIFORNIA

MARK	REVISIONS	APPR.	DATE

DESIGNED BY DJM DRAWN BY SKD CHECKED BY MWW

CITY OF RIVERSIDE, CALIFORNIA
PUBLIC WORKS DEPARTMENT

STREETER AVENUE UNDERPASS

MECHANICAL / ELECTRICAL SITE PLAN & PROFILE SD-05

D-848
SHEET 93 OF 191

HORIZ. SCALE: VERT. SCALE: FILE NO.

DATE: 8/7/2012
TIME: 10:20:04 AM

USER = altymchak
50005.sht

m:\#rr\08-400-139-00\acad\SHEETS\50005.sht

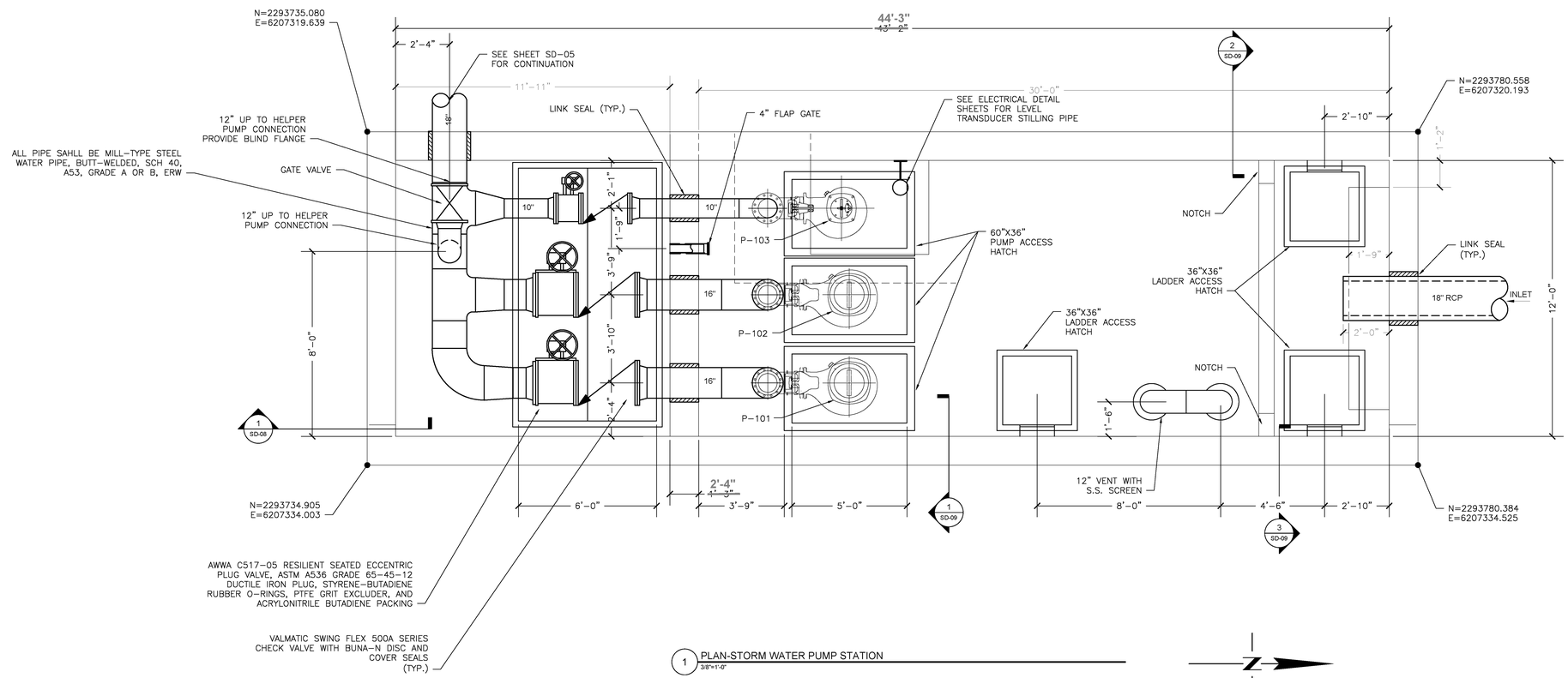

1 PLAN-STORM WATER PUMP STATION
3/8"=1'-0"

AS BUILT
BID NO. 7094
C.C.A. DATE 08-20-15
R.E. NAME MICHAEL WOLFF

0 3 6 9
3/8"=1'-0"

IMPORTANT NOTICE
Section 4216/4217 of the Government Code requires a Dig Alert Identification Number to be issued before a "Permit to Excavate" will be valid. For your Dig Alert I.D. Number call
CALL TOLL FREE
48 HOURS BEFORE YOU DIG
UNDERGROUND SERVICE ALERT
1-800-227-2600

WILSON & COMPANY
625 E. CARNEGIE DRIVE SUITE 100
SAN BERNARDINO, CA 92408
(909) 806-8000
www.wilsonco.com

DATE 8-7-12

REGISTERED PROFESSIONAL ENGINEER
MARK W. WENTZEL
M 32287
EXP. 12-31-12
MECHANICAL
STATE OF CALIFORNIA
8-7-2012

MARK	REVISIONS	APPR.	DATE

DESIGNED BY DJY DRAWN BY JLL CHECKED BY MW

CITY OF RIVERSIDE, CALIFORNIA
PUBLIC WORKS DEPARTMENT

STREETER AVENUE UNDERPASS

STORMWATER PUMP STATION DETAIL SD-06

HORIZ. SCALE: VERT. SCALE: N/A

D-848
SHEET 94 OF 191
FILE NO.

DATE: 8/2012

COLGROVE, JOHN A.
SD008.dwg

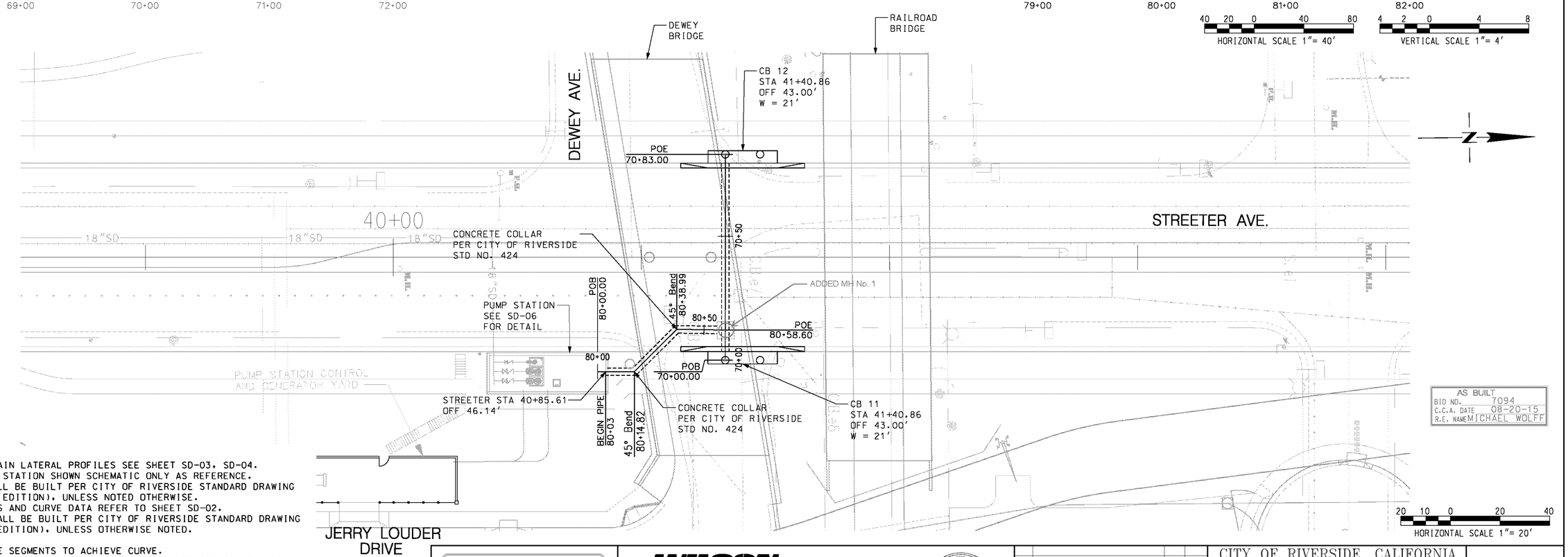

AS BUILT
BID NO. 7094
C.C.A. DATE 08-20-15
R.E. NAME MICHAEL WOLFF

NOTE:

1. FOR THE STORM DRAIN LATERAL PROFILES SEE SHEET SD-03, SD-04.
2. STORM DRAIN LIFT STATION SHOWN SCHEMATIC ONLY AS REFERENCE.
3. ALL MANHOLES SHALL BE BUILT PER CITY OF RIVERSIDE STANDARD DRAWING NO. 430 (CURRENT EDITION), UNLESS NOTED OTHERWISE.
4. FOR LINE BEARINGS AND CURVE DATA REFER TO SHEET SD-02.
5. ALL JUNCTIONS SHALL BE BUILT PER CITY OF RIVERSIDE STANDARD DRAWING NO. 421(CURRENT EDITION), UNLESS OTHERWISE NOTED.
6. NOT USED
7. USE 5° BEVEL PIPE SEGMENTS TO ACHIEVE CURVE.
8. ALL CATCH BASINS SHALL BE BUILT PER CITY OF RIVERSIDE SD NO. 405, (CURRENT EDITION) UNLESS OTHERWISE NOTED.
9. ONCE TEMPORARY DETOUR ROAD IS REMOVED CONTRACTOR MUST BRING MANHOLES UP TO GRADE ON JERRY LOUDER DRIVE.
10. LOCAL DEPRESSIONS PER COUNTY OF RIVERSIDE STD. DRAWING LD201 (CASE C) (CURRENT EDITION) UNLESS OTHERWISE NOTED.
11. ALL REINFORCED CONCRETE PIPE (RCP) SHOULD BE CLASS IV, 2000-DLOAD.

IMPORTANT NOTICE
Section 4216/4217 of the Government Code requires a Dig Alert Identification Number to be issued before a "Permit to Excavate" will be valid. For your Dig Alert I.D. Number call
CALL TOLL FREE
48 HOURS BEFORE YOU DIG
UNDERGROUND SERVICE ALERT
1-800-227-2600

WILSON & COMPANY
625 E. CARNEGIE DRIVE SUITE 100
SAN BERNARDINO, CA 92408
(909) 806-8000
www.wilsonco.com

DATE 8-7-12

REGISTERED PROFESSIONAL ENGINEER JOHN E. HILLS No. 63769 CIVIL STATE OF CALIFORNIA

MARK	REVISIONS	APPR.	DATE

DESIGNED BY TWF DRAWN BY SKD CHECKED BY JNH

CITY OF RIVERSIDE, CALIFORNIA
PUBLIC WORKS DEPARTMENT

STREETER AVENUE UNDERPASS

STORM DRAIN PLAN & PROFILE SD-07

HORIZ. SCALE: VERT. SCALE:

D-848
SHEET 95 OF 191
FILE NO.

M:\#6968-400-139-00\CADD\SHEETS\SD007.dgn
DATE: 8/7/2012
TIME: 12:29:50 PM
USER = altymchek
SD007.dgn

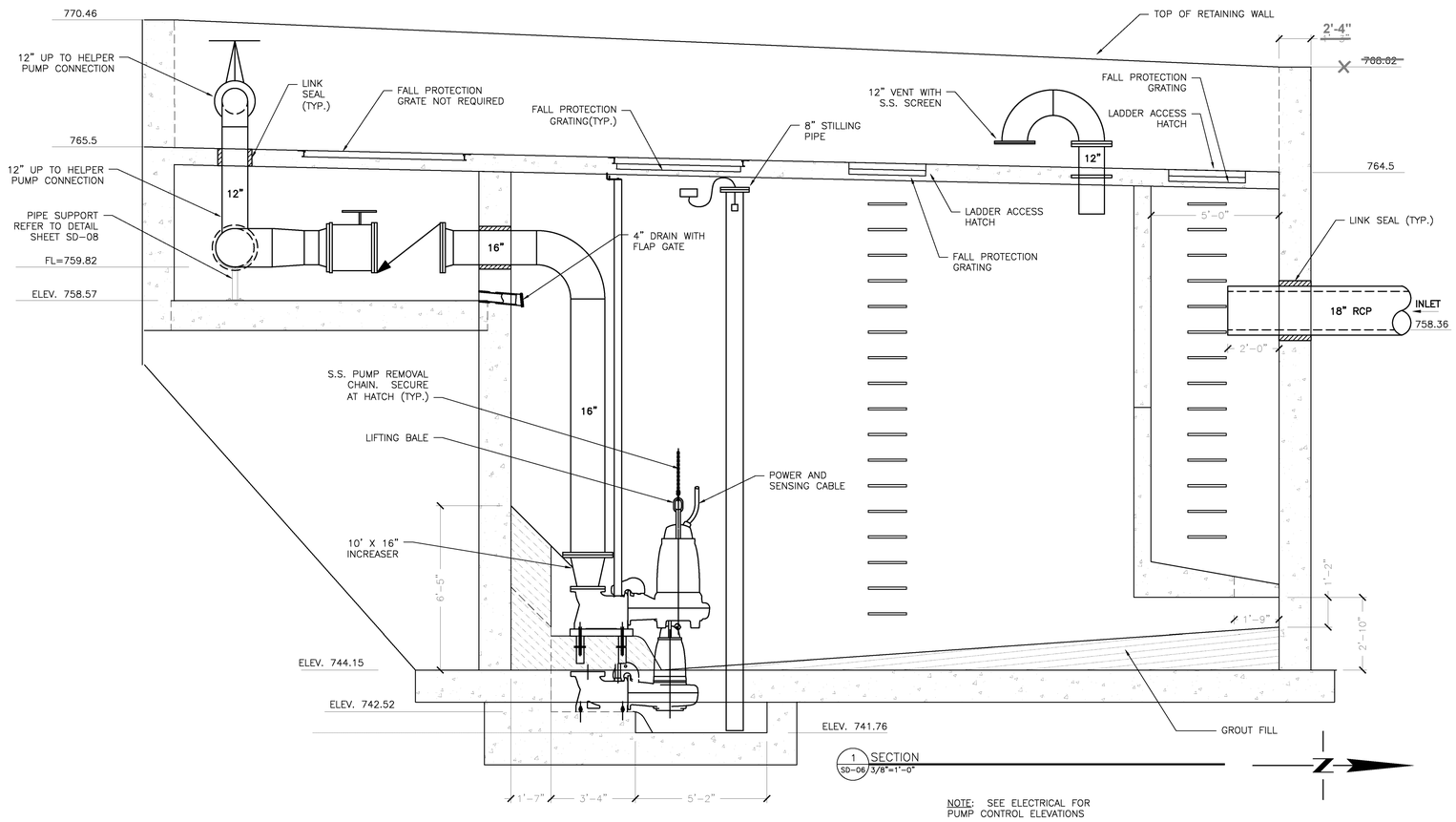

NOTE: SEE ELECTRICAL FOR PUMP CONTROL ELEVATIONS

AS BUILT
BID NO. 7094
C.C.A. DATE 08-20-15
R.E. NAME MICHAEL WOLFF

0 3 6 9
3/8"=1'-0"

IMPORTANT NOTICE
Section 4216/4217 of the Government Code requires a Dig Alert Identification Number to be issued before a "Permit to Excavate" will be valid. For your Dig Alert I.D. Number call
CALL TOLL FREE
48 HOURS BEFORE YOU DIG
UNDERGROUND SERVICE ALERT
1-800-227-2600

WILSON & COMPANY
625 E. CARNEGIE DRIVE SUITE 100
SAN BERNARDINO, CA 92408
(909) 806-8000
www.wilsonco.com

DATE 8-7-12

REGISTERED PROFESSIONAL ENGINEER MARK W. WENTZEL M 32987 EXP. 12-31-12 MECHANICAL STATE OF CALIFORNIA
8-7-2012

MARK	REVISIONS	APPR.	DATE

DESIGNED BY DJM DRAWN BY JLL CHECKED BY MWW

CITY OF RIVERSIDE, CALIFORNIA
PUBLIC WORKS DEPARTMENT

STREETER AVENUE UNDERPASS

STORMWATER PUMP STATION DETAIL SD-08

HORIZ. SCALE: VERT. SCALE: N/A

D-848
SHEET 96 OF 191
FILE NO.

DATE: 6/2012

M:\VR\VR-100-138-00\CADD\SHEETS\SD008.dwg

COLGROVE, JOHN A.
SD008.dwg

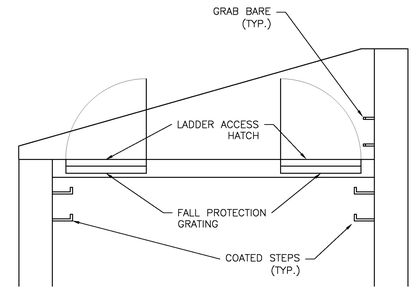

3 SECTION
SD-06 3/8"=1'-0"

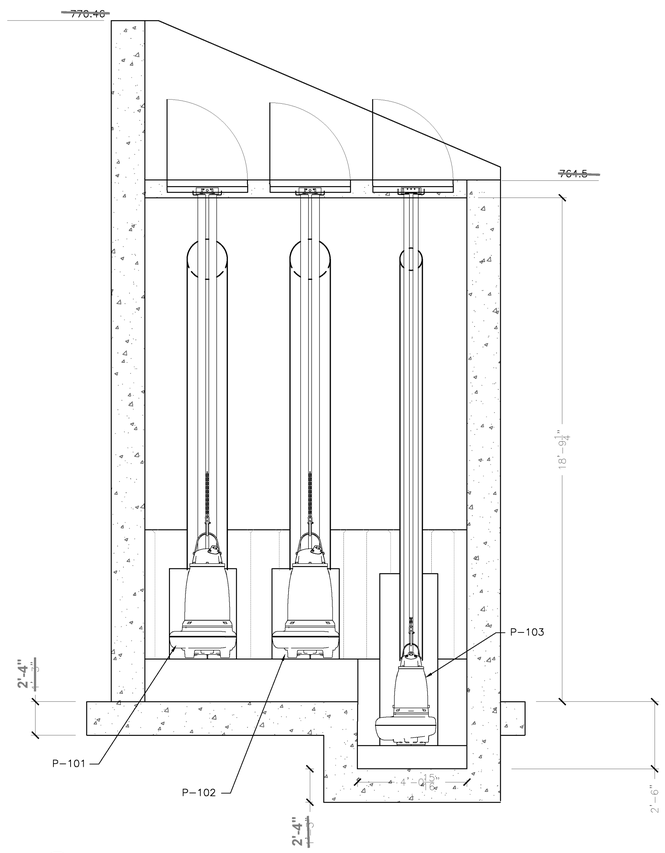

1 SECTION
SD-06 3/8"=1'-0"

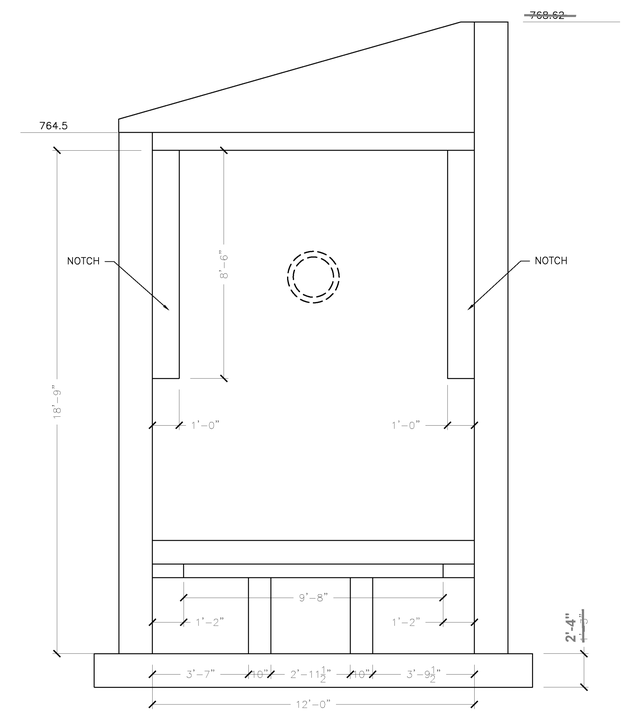

2 SECTION
SD-06 3/8"=1'-0"

NOTES:
SEE DRAWING SD-06 FOR DETAILS
SEE PUMP STATION DETAIL 5 SHEET S-10

AS BUILT
BID NO. 7094
C.C.A. DATE 08-20-15
R.E. NAME MICHAEL WOLFF

IMPORTANT NOTICE
Section 4216/4217 of the Government Code requires a Dig Alert Identification Number to be issued before a Permit Expires or it will be void. For your Dig Alert I.D. Number call
CALL TOLL FREE
48 HOURS BEFORE YOU DIG
UNDERGROUND SERVICE ALERT
1-800-227-2600

WILSON & COMPANY
625 E. CARNEGIE DRIVE SUITE 100
SAN BERNARDINO, CA 92408
(909) 806-8000
www.wilsonco.com

DATE 8-7-12

REGISTERED PROFESSIONAL ENGINEER
MARK W. WENTZEL
M 32987
EXP. 12-31-12
MECHANICAL
STATE OF CALIFORNIA
8-7-2012

MARK	REVISIONS	APPR.	DATE

DESIGNED BY DJT DRAWN BY JL CHECKED BY MW

CITY OF RIVERSIDE, CALIFORNIA
PUBLIC WORKS DEPARTMENT
STREETER AVENUE UNDERPASS
STORMWATER PUMP STATION DETAIL SD-09
HORIZ. SCALE: VERT. SCALE: N/A

D-848
SHEET 97 OF 191
FILE NO.

DATE: 6/2012

COLGROVE, JOHN A.
SD009.dwg

W:\RV\RV8-00-13\00\SHEETS\00\SD009

PUMP SCHEDULE

MARK	LOCATION	SERVICE	PUMP TYPE	GPM	HEAD (PSIG) FEET OF WATER	RPM	ELECTRICAL			REMARKS
							HP	VOLT	PH	
P-101	STORMWATER PUMP STATION	STORM WATER	NON-CLOG SUBMERSIBLE WASTEWATER	3,500	41	1185	70	460	3	SECONDARY OPERATING POINT 5,200 GPM @ 28'
P-102	STORMWATER PUMP STATION	STORM WATER	NON-CLOG SUBMERSIBLE WASTEWATER	3,500	41	1185	70	460	3	SECONDARY OPERATING POINT 5,200 GPM @ 28'
P-103	STORMWATER PUMP STATION	STORM WATER	NON-CLOG SUBMERSIBLE WASTEWATER	1,100	38	1160	25	460	3	SECONDARY OPERATING POINT 3,600 GPM @ 20'

GENERAL NOTES:
A. PROVIDE HIGH EFFICIENCY MOTORS.

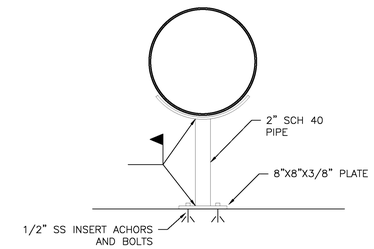

1 PIPE STAND DETAIL
NTS

AS BUILT
BID NO. 7094
C.C.A. DATE 08-20-15
R.E. NAME MICHAEL WOLFF

IMPORTANT NOTICE
Section 4216/4217 of the Government Code requires a Dig Alert Identification number be issued before a permit will be issued, a "Permit to Excavate" will be void. For your Dig Alert I.D. Number call
CALL TOLL FREE
48 HOURS BEFORE YOU DIG
UNDERGROUND SERVICE ALERT
1-800-227-2600

WILSON & COMPANY
625 E. CARNEGIE DRIVE SUITE 100
SAN BERNARDINO, CA 92408
(909) 806-8000
www.wilsonco.com

DATE 8-7-12

REGISTERED PROFESSIONAL ENGINEER MARK W. WENTZEL M 32987 EXP. 12-31-12 MECHANICAL STATE OF CALIFORNIA
8-7-2012

MARK	REVISIONS	APPR.	DATE

DESIGNED BY DJT DRAWN BY JL CHECKED BY MW

CITY OF RIVERSIDE, CALIFORNIA
PUBLIC WORKS DEPARTMENT
STREETER AVENUE UNDERPASS
STORMWATER PUMP STATION DETAIL SD-10
HORIZ. SCALE: VERT. SCALE: N/A

D-848
SHEET 98 OF 191
FILE NO.

DATE: 6/2012
COLGROVE, JOHN A.
SD010.dwg

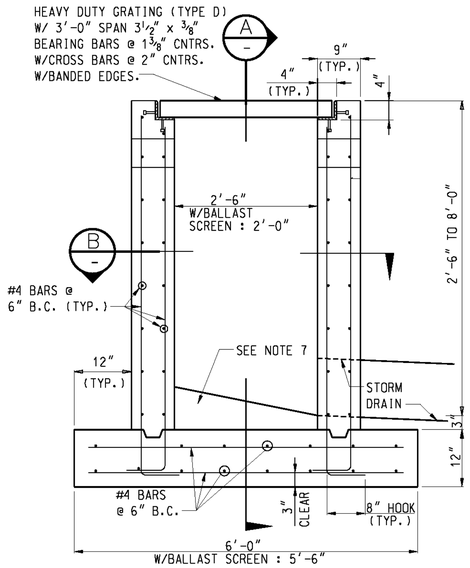

HEAVY DUTY CATCH BASIN DETAIL
NTS

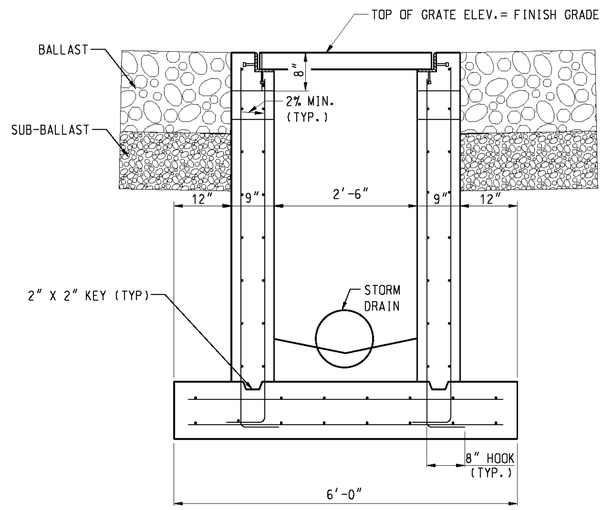

SECTION A
NTS

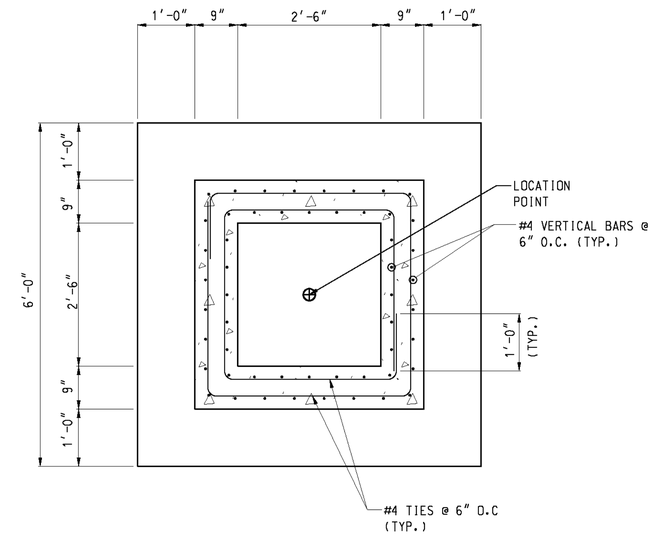

SECTION B
NTS

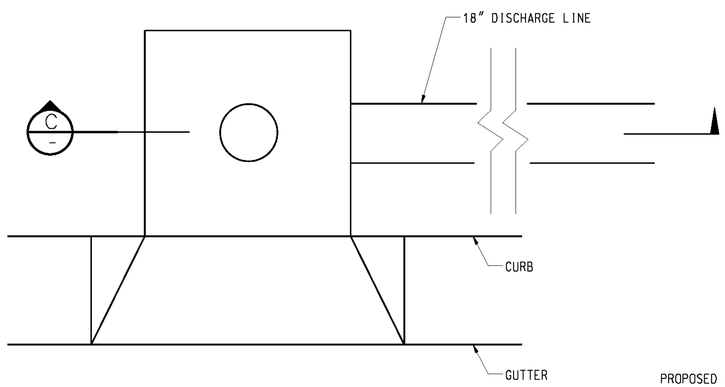

DISCHARGE LINE TIE-IN
NTS

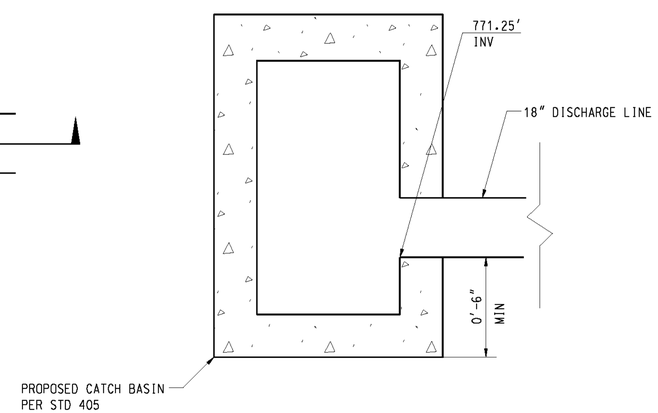

SECTION C
NTS

HEAVY DUTY CATCH BASIN NOTES:

1. REINFORCEMENT: MILD STEEL REINFORCEMENT SHALL MEET THE REQUIREMENTS OF THE CURRENT A.S.T.M. DESIGNATIONS: A706, GRADE 60.
2. FABRICATION FOR REINFORCEMENT SHALL BE IN ACCORDANCE WITH CHAPTER 7 OF THE CONCRETE REINFORCING STEEL INSTITUTE (C.R.S.I.) MANUAL FOR STANDARD PRACTICE. DIMENSIONS OF BENDING ARE OUT TO OUT OF BAR.
3. MINIMUM CONCRETE COVER ON REINFORCEMENT SHALL BE TWO (2) INCHES UNLESS NOTED OTHERWISE.
4. MAXIMUM SIZE AGGREGATE SHALL BE ONE (1) INCH.
5. CONCRETE SHALL HAVE AN ULTIMATE COMPRESSIVE STRENGTH OF NO LESS THAN 4000 PSI IN 28 DAYS.
6. ALL HEAVY DUTY GRATING AND ANGLES SHALL BE GALVANIZED IN ACCORDANCE WITH SECTION 75 OF THE CALTRANS SPECIFICATIONS.
7. GROUT INVERT: INVERT OF CATCH BASIN SHALL BE GIVEN A STEEL TROWEL FINISH AND SHALL HAVE A LONGITUDINAL AND LATERAL SLOPE OF 1:12 MINIMUM AND 1:3 MAXIMUM.
8. ALL CAST-IN-PLACE, PRE-CAST ALTERNATE CONCRETE, REINFORCING STEEL, AND LIFTING DEVICE NOTES ON SHEET C1-50D ALSO APPLY.

AS BUILT
(NO CORRECTIONS ON THIS SHEET)
BID No. 7094
C.C.A. DATE 08-20-15
R.E. NAME MICHAEL WOLFF

IMPORTANT NOTICE
Section 4216/4217 of the Government Code requires a minimum of two working days notice to be issued before an "Permit to Excavate" will be valid. For your Dig Alert I.D. Number call
CALL TOLL FREE
48 HOURS BEFORE YOU DIG
UNDERGROUND SERVICE ALERT
1-800-227-2600

WILSON & COMPANY
625 E. CARNEGIE DRIVE SUITE 100
SAN BERNARDINO, CA 92408
(909) 806-8000
www.wilsonco.com

DATE 8-7-12

REGISTERED PROFESSIONAL ENGINEER
MARK W. WENTZEL
M 32607
EXP. 12-31-2012
MECHANICAL
STATE OF CALIFORNIA

MARK	REVISIONS	APPR.	DATE

DESIGNED BY MWF DRAWN BY SKD CHECKED BY JNH

CITY OF RIVERSIDE, CALIFORNIA
PUBLIC WORKS DEPARTMENT

STREETER AVENUE UNDERPASS

D-848

HEAVY DUTY CATCH BASIN DETAILS SD-11

SHEET 99 OF 191

HORIZ. SCALE: VERT. SCALE: FILE NO.

DATE: 8/7/2012
TIME: 10:20:07 AM

USER = altymchek
SD011.aht

ms wr=#08-400-139-00#ccdd#SHEETS#SD011.aht

ABBREVIATIONS

AC	AIR COOLED CHILLER
AHU	AIR HANDLING UNIT
AFF	ABOVE FINISHED FLOOR
B	BOILER
BC	BLOWER COIL
BFP	BOILER FEEDWATER PUMP
C	CONVECTOR (HOT WATER)
CHU	CABNET/UNIT HEATER
CRU	COMPUTER ROOM UNIT
CU	CONDENSING UNIT
CWP	COLD WATER PUMP
DMPR	DAMPER
(E)	EXISTING
(EX)	EXISTING
EDF	ELECTRIC DRINKING FOUNTAIN
EF	EXHAUST FAN
EWC	ELECTRIC WATER COOLER
EX	EXISTING
FCU	FAN COIL UNIT
FPVAV	FAN POWERED VAV BOX
G	GUARD
GFI	GROUND FAULT INTERRUPTER
H-O-A	HAND-OFF-AUTOMATIC
HWP	HOT WATER PUMP
L	LOUVER
MAU	MAKE UP AIR UNIT
O-O	ON-OFF
PF	PHASE FAILURE
RCP	RECIRUATING PUMP
RTU	ROOF TOP UNIT
SB	STEAM BOILER
SP	SUMP PUMP
UH	UNIT HEATER
VAV	VAV BOX
WH	WATER HEATER
WP	INDICATES WEATHERPROOF
WS	WATER SOFTENER

GENERAL ELECTRICAL NOTES:

1. COMPLETE ALL WORK IN ACCORDANCE WITH THE NATIONAL ELECTRICAL CODE (NEC), NATIONAL ELECTRICAL SAFETY CODE (NESC), AND LOCAL REGULATIONS.
2. ALL ELECTRICAL EQUIPMENT SHALL BE U.L. LISTED.
3. SEE SPECIFICATIONS FOR ADDITIONAL REQUIREMENTS.
4. THE CONSTRUCTION DRAWINGS ARE DIAGRAMMATIC IN NATURE AND SHOW RELATIVE LOCATIONS OF DEVICES AND EQUIPMENT. COORDINATE WITH THE ACTUAL EQUIPMENT INSTALLED.
5. COORDINATE ELECTRICAL WORK WITH THE WORK OF OTHER TRADES.
6. ALL CONDUCTORS SHALL BE COPPER.
7. ALL 120 VOLT AND 277 VOLT CIRCUITS SHALL HAVE INDIVIDUAL NEUTRAL CONDUCTORS. NEUTRALS SHALL NOT BE SHARED ON MULTI-PHASE HOMERUN CIRCUITS.
8. ALL CONDUCTORS OPERATING ABOVE 100 VOLTS SHALL BE INSTALLED IN CONDUIT OR RACEWAY.
9. PROVIDE CONDUIT EXPANSION FITTINGS AT ALL BUILDING EXPANSION JOINTS.
10. SEE SHEET SD-05 FOR SITE ELECTRICAL WORK
11. CONTRACTOR IS RESPONSIBLE TO LOCATE AND PROTECT UTILITY LINES AND PIPING IN THE AREA UNDER CONSTRUCTION.
12. ALL STARTERS AND CONTACTORS SHALL HAVE 120 VOLT CONTROLS. PROVIDE FUSED CONNECTION FOR UNITS OPERATING AT 120 VOLTS LINE TO NEUTRAL. PROVIDE FUSED CONTROL POWER TRANSFORMERS FOR UNITS OPERATING ABOVE 120 VOLTS.
13. SEE SPECIFICATIONS FOR ALTERNATE WORK ITEMS.
14. ALL WORK SHALL BE SUITABLE FOR APPLICABLE SEISMIC ZONE.
15. ALL WORK SHALL BE SUITABLE FOR 90 MPH WIND LOADING.
16. PERFORM SHORT CIRCUIT STUDY AND ARC FLASH STUDY - SEE SPECIFICATIONS SECTION 16057. SET PROTECTIVE DEVICES, PROVIDE AND INSTALL LABELS ON EQUIPMENT IN ACCORDANCE WITH THE STUDY.

LIGHTING FIXTURE SCHEDULE

MARK	LAMP			VOLTS	MOUNTING		MANUFACTURER OR EQUAL	NOTES
	TYPE	NO.	WATTS		TYPE	HEIGHT		
A	HPS	1	100	120	POLE	16 FEET	LITHONIA AS1 100S SR4SC SPA PER PE1 VG	A,B
---							POLE - LITHONIA SSS 16 4C	C,D

LAMP TYPES:	F	FLUORESCENT	HPS	HIGH PRESSURE SODIUM
	CF	COMPACT FLUORESCENT	MH	METAL HALIDE
	INC	INCANDESCENT	LED	LIGHT EMITTING DIODE

NOTES:

A. PROVIDE FIXTURE WITH TWIST LOCK RECEPTACLE AND TWIST LOCK PHOTOCELL

B. PROVIDE FIXTURE WITH POLYCARBONATE VANDAL GUARD OVER LENSE.

C. PROVIDE POLE COMPLETE WITH ANCHOR BOLTS, BASE COVER, HANDHOLE, GROUND LUG, AND FIXTURE MOUNTING HARDWARE.

D. POLE COLOR TO MATCH LIGHT FIXTURE

ELECTRICAL LEGEND

A (2X4)	LIGHTING FIXTURE (TYPICAL SYMBOLS) REFER TO LIGHTING FIXTURE SCHEDULE THIS SHEET.
A (1X4)	
(STRIP)	
A (CAN)	
A (WALL MTD)	
A (EMERGENCY)	
	EXIT SIGN, CEILING MOUNTED. PROVIDE ARROWS AS SHOWN
	EXIT SIGN, WALL MOUNTED. PROVIDE ARROWS AS SHOWN.
	EXIT SIGN, DOUBLE FACED, CEILING MOUNTED. PROVIDE ARROWS AS SHOWN.
	EMERGENCY BATTERY UNIT, WALL MOUNTED
SWITCH LEG(S) / NEUTRAL / 12 / 10 / GROUND / PHASE (HOT)	CONDUIT AND WIRING - ARROWS INDICATE HOMERUN TO PANEL. HATCH MARKS INDICATE NUMBER OF CONDUCTORS IF MORE THAN TWO PLUS ONE GROUND. NUMBER INDICATES SIZE IF OTHER THAN #12 AWG. DOES NOT APPLY TO CONDUCTORS USED FOR LIGHTING CIRCUITS- FOR LIGHTING CIRCUITS, PLANS SHOW SPECIFIC CONDUCTORS ONLY FOR UNSWITCHED POWER FEED TO FIXTURES OR GROUPS OF FIXTURES. PLANS DO NOT SHOW WHAT CONDUCTORS ARE REQUIRED TO ACCOMPLISH LIGHTING SCHEMES SHOWN. CONTRACTOR MUST DETERMINE WHAT CONDUCTORS ARE NEEDED AMONG FIXTURES, SWITCHES, ETC, AND INCLUDE REQUIRED WIRING IN HIS BID.
LA-1ab	LETTER AND NUMBER DENOTES PANELBOARD AND CIRCUIT. LETTER DENOTES SUB CIRCUIT AND SWITCHING. (IF REQUIRED)
—UG—	UNDERGROUND CONDUIT AND WIRING
—EDB—	ELECTRICAL DUCT BANK
S	SWITCH, SINGLE POLE
S_M	MANUAL STARTER
S_2	SWITCH, DOUBLE POLE
S_3	SWITCH, THREE WAY
S_4	SWITCH, FOUR WAY
S_D	SWITCH, DIMMABLE
OS	WALL MOUNTED OCCUPANCY SENSOR
OS	CEILING MOUNTED OCCUPANCY SENSOR
T	THERMOSTAT
	DUPLEX RECEPTACLE 20A, NEMA CONFIGURATION 5-20R
GFI	DUPLEX RECEPTACLE, GROUND FAULT INTERRUPTING
WP	INDICATES WEATHERPROOF
	QUADRUPLEX RECEPTACLE
	SIMPLEX RECEPTACLE 20A, NEMA CONFIGURATION 5-20R
	SPECIALTY RECEPTACLE AS INDICATED ON SHEETS
J	JUNCTION BOX
	EQUIPMENT CONNECTION
	SAFETY SWITCH, NUMBER INDICATES FUSE SIZE. (N) INDICATES NON FUSED.
	COMBINATION MAGNETIC MOTOR STARTER (SS) INDICATES SOLID STATE TYPE
	MAGNETIC MOTOR STARTER
	CIRCUIT BREAKER, TRIP RATING/NUMBER OF POLES INDICATED
	MOTOR, HP INDICATED, (* - INDICATES 1/8 HP OR LESS)
	PANELBOARD, SURFACE MOUNTED
	PANELBOARD, FLUSH MOUNTED
PE	PHOTOCELL
SPD1	SURGE PROTECTIVE DEVICE. NUMBER INDICATES LEVEL, SEE SPECIFICATIONS.
PF	PHASE FAULT
GF	GROUND FAULT
ST	SHUNT TRIP
R	PILOT LIGHT, COLOR INDICATED
	SELECTOR SWITCH
	REMOTE STOP PUSHBUTTON STATION

AS BUILT
(NO CORRECTIONS ON THIS SHEET)
BID No. 7094
C.C.A. DATE 08-20-15
R.E. NAME MICHAEL WOLFF

IMPORTANT NOTICE
Section 4216/4217 of the Government Code requires a Dig Alert Identification Number to be issued before a "Permit to Excavate" will be valid. For your Dig Alert I.D. Number call
CALL TOLL FREE
48 HOURS BEFORE YOU DIG
UNDERGROUND SERVICE ALERT
1-800-227-2600

WILSON &COMPANY
625 E. CARNEGIE DRIVE SUITE 100
SAN BERNARDINO, CA 92408
(909) 806-8000
www.wilsonco.com

DATE 8-7-12

MARK	REVISIONS	APPR.	DATE

DESIGNED BY MP DRAWN BY DM CHECKED BY

CITY OF RIVERSIDE, CALIFORNIA
PUBLIC WORKS DEPARTMENT

STREETER AVENUE UNDERPASS

ELECTRICAL LEGEND AND GENERAL NOTES SE-01

HORIZ. SCALE: VERT. SCALE: N/A

D-848
SHEET 100 OF 191

FILE NO.

BOCKENSTETTE, ROBERT CURTIS
SE001.dwg

DATE: 6/2012

M:\PR\06-00-132-00\DWG\SHEETS\SE01.DWG

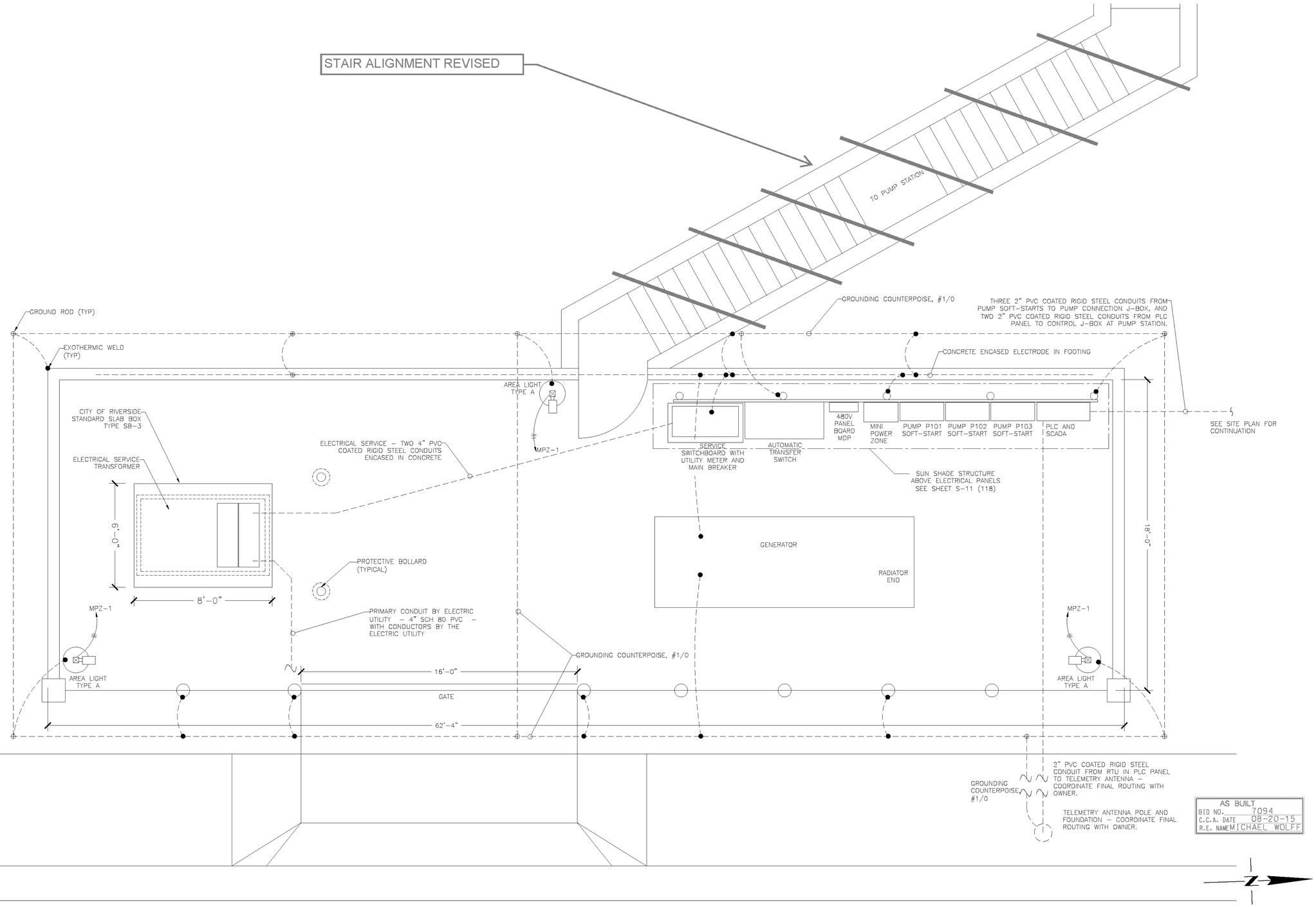

1 PUMP STATION CONTROL AND GENERATOR YARD PLAN
SCALE: 3/8" = 1'-0"

IMPORTANT NOTICE
Section 4216/4217 of the Government Code requires a Dig Alert Identification Number to be issued before a "Permit to Excavate" will be valid. For your Dig Alert I.D. Number call
CALL TOLL FREE
48 HOURS BEFORE YOU DIG
UNDERGROUND SERVICE ALERT
1-800-227-2600

WILSON & COMPANY
625 E. CARNEGIE DRIVE SUITE 100
SAN BERNARDINO, CA 92408
(909) 806-8000
www.wilsonco.com

DATE 8-7-12

MARK	REVISIONS	APPR.	DATE

DESIGNED BY DMP DRAWN BY DPK CHECKED BY

CITY OF RIVERSIDE, CALIFORNIA
PUBLIC WORKS DEPARTMENT

STREETER AVENUE UNDERPASS

PUMP STATION CONTROL AND GENERATOR PLAN SE-02

HORIZ. SCALE: VERT. SCALE: N/A

D-848
SHEET 101 OF 191
FILE NO.

DATE: 6/2012

BOCKENSTETTE, ROBERT CURTIS
SE002.dwg

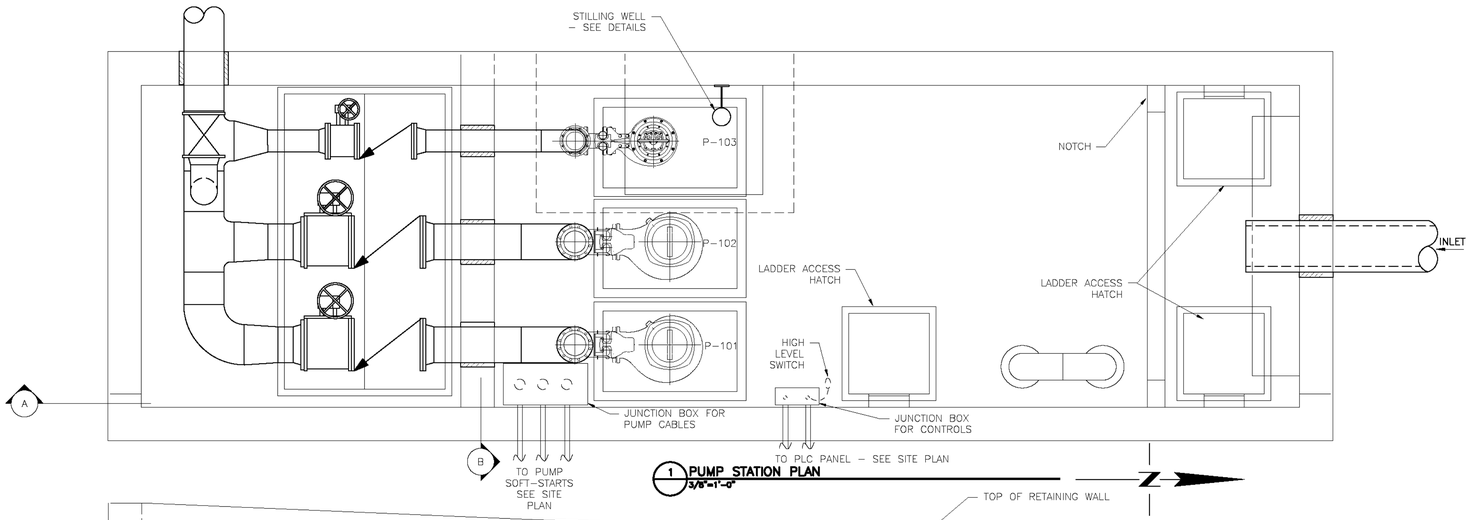

1 PUMP STATION PLAN
3/8"=1'-0"

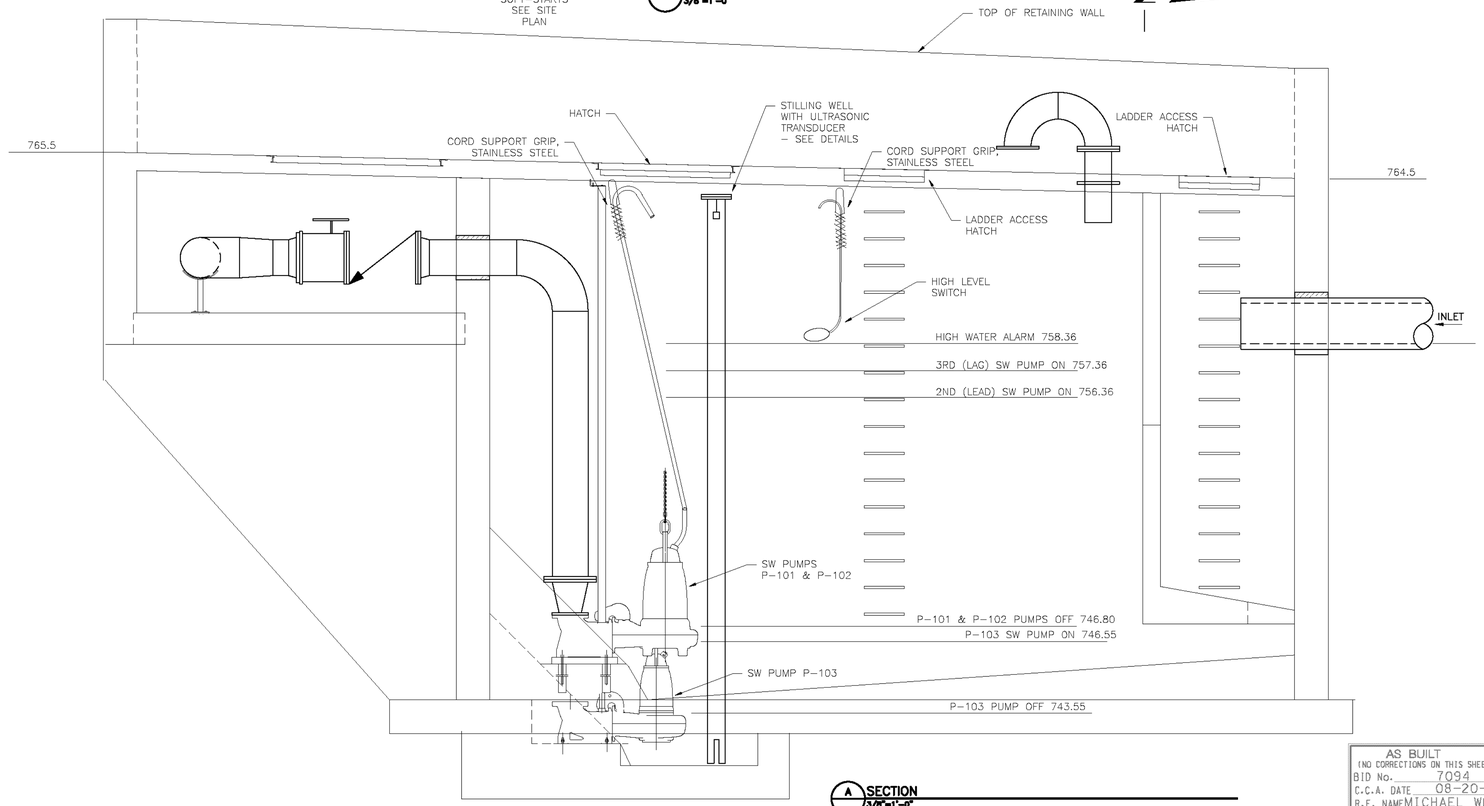

A SECTION
3/8"=1'-0"

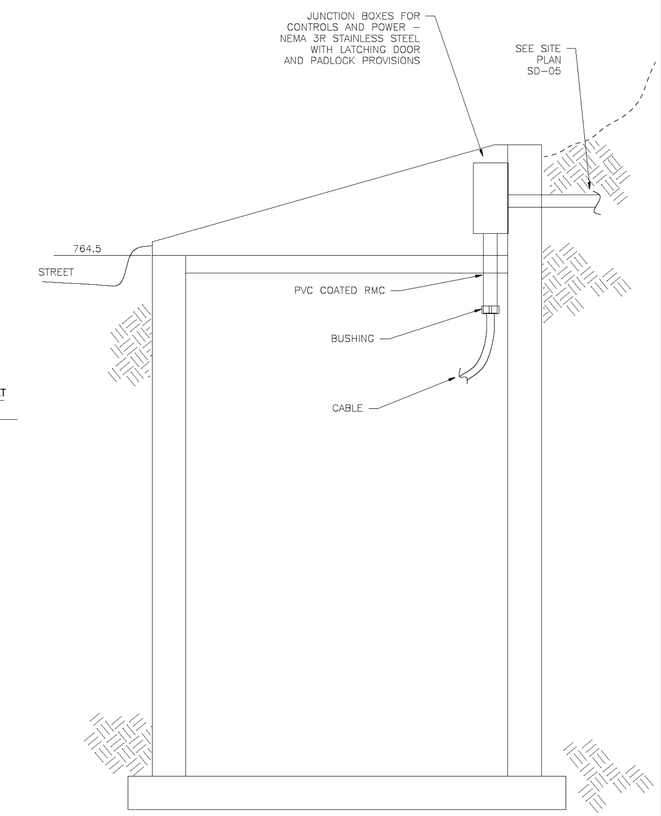

B SECTION
3/8"=1'-0"

0 3 6 9
3/8"=1'-0"

AS BUILT
(NO CORRECTIONS ON THIS SHEET)
BID No. 7094
C.C.A. DATE 08-20-15
R.E. NAME MICHAEL WOLFF

IMPORTANT NOTICE
Section 4216/4217 of the Government Code requires a Dig Alert Identification Number to be issued before a "Permit to Excavate" will be valid. For your Dig Alert I.D. Number call
CALL TOLL FREE
48 HOURS BEFORE YOU DIG
UNDERGROUND SERVICE ALERT
1-800-227-2600

WILSON
&COMPANY
625 E. CARNEGIE DRIVE SUITE 100
SAN BERNARDINO, CA 92408
(909) 806-8000
www.wilsonco.com

DATE 8-7-12

REGISTERED PROFESSIONAL ENGINEER
MARK W. PETERSON
E 14689
Exp. 6/30/2014
ELECTRICAL
STATE OF CALIFORNIA
8/10/2012

MARK	REVISIONS	APPR.	DATE

DESIGNED BY DMP DRAWN BY DPK CHECKED BY

CITY OF RIVERSIDE, CALIFORNIA
PUBLIC WORKS DEPARTMENT

STREETER AVENUE UNDERPASS

PUMP STATION PLAN SE-03

HORIZ. SCALE: VERT. SCALE: N/A

D-848
SHEET 102 OF 191

FILE NO.

DATE: 6/2012

BOCKENSTETTE, ROBERT CURTIS
SE003.dwg

PANELBOARD MDP SCHEDULE

480/277 VOLTS, 3 PHASE, 4 WIRE — 400 AMPERES — MAIN CIRCUIT BREAKER — 22,000 AIC
LOCATION - PUMP STATION — EMD = 192 kVA — ENCLOSURE - NEMA 3R/12 — SURFACE MOUNTED

DEMAND LOAD	DEMAND FACTOR	CONNECT LOAD	LOAD	BKR	CKT	PH	CKT	BKR	LOAD	CONNECT LOAD	DEMAND FACTOR	DEMAND LOAD
89.0	1.0	89.0			1	A	2	30/2	MINI POWER ZONE	21.0	1.0	21.0
89.0	1.0	89.0	PUMP P-101	150/3	3	B	4			21.0	1.0	21.0
89.0	1.0	89.0			5	C	6		SPACE	0.0	0.5	0.0
89.0	1.0	89.0			7	A	8		SPACE	0.0	0.5	0.0
89.0	1.0	89.0	PUMP P-102	150/3	9	B	10		SPACE	0.0	0.5	0.0
89.0	1.0	89.0			11	C	12		SPACE	0.0	0.5	0.0
32.0	1.0	32.0			13	A	14		SPACE	0.0	0.5	0.0
32.0	1.0	32.0	PUMP P-103	70/3	15	B	16		SPACE	0.0	0.5	0.0
32.0	1.0	32.0			17	C	18		SPACE	0.0	0.5	0.0
0.0	0.5	0.0	SPACE		19	A	20		SPACE	0.0	0.5	0.0
0.0	0.5	0.0	SPACE		21	B	22		SPACE	0.0	0.5	0.0
0.0	0.5	0.0	SPACE		23	C	24		SPACE	0.0	0.5	0.0
0.0	0.5	0.0	SPACE		25	A	26		SPACE	0.0	0.5	0.0
0.0	0.5	0.0	SPACE		27	B	28		SPACE	0.0	0.5	0.0
0.0	0.5	0.0	SPACE		29	C	30		SPACE	0.0	0.5	0.0
						A	YES		FEED-THRU LUGS		---	
						B	NO	X	TO ?		---	
						C					---	
210.0	A	210.0	PANEL	231.0		A	231.0	PANEL		21.0	A	21.0
210.0	B	210.0	CONNECTED	231.0		B	231.0	DEMAND		21.0	B	21.0
210.0	C	210.0	AMPS	210.0		C	210.0	AMPS		0.0	C	0.0

EST MAX DEMAND = VOLTS x 1.732 x MAX DEMAND AMPS = 480 x 1.732 x 231 = 192 kVA

MINIMUM AMPACITY = 1.25 x MAX DEMAND AMPS = 1.25 x 231 = 289 AMPS

NOTES: "G" IN THE CIRCUIT BREAKER COLUMN INDICATES A GFCI TYPE CIRCUIT BREAKER
" * " IN THE CIRCUIT BREAKER COLUMN INDICATES A CIRCUIT BREAKER HANDLE LOCK

OPTIONS: PROVIDE FACTORY BUILT-IN SURGE PROTECTIVE DEVICE (LEVEL 2 - 160,000 AMPERES) - SEE SPECIFICATIONS

MINI POWER ZONE SCHEDULE

480 VOLTS TO 120/240 VOLTS, 1 PHASE, 3 WIRE, 10KVA — 60 AMPERES, 240 V — MAIN CIRCUIT BREAKER — 14,000 AIC, 480 VOLTS
LOCATION - PUMP STATION — EMD = 9 kVA — ENCLOSURE - NEMA 3R — SURFACE MOUNTED

DEMAND LOAD	DEMAND FACTOR	CONNECT LOAD	LOAD	BKR	CKT	PH	CKT	BKR	LOAD	CONNECT LOAD	DEMAND FACTOR	DEMAND LOAD
3.0	1.0	3.0	AREA LIGHTING	15	1	A	2	20	RECEPTACLE AT RACK	8.3	0.5	4.2
2.0	1.0	2.0	GENERATOR BATTERY CHARGE	15	3	B	4	20	RECEPTACLE AT RACK	8.3	0.5	4.2
12.0	1.0	12.0	GENERATOR BLOCK HEATER	20/2	5	A	6	20	CONTROL PANEL	10.0	1.0	10.0
12.0	1.0	12.0			7	B	8	20	SPARE	8.3	0.5	4.2
4.2	0.5	8.3	SPARE	20	9	A	10	20	SPARE	8.3	0.5	4.2
						A	YES		FEED-THRU LUGS		---	
						B	NO	X	TO ?		---	
19.2	A	23.3	PANEL	49.9		A	37.5	PANEL		26.6	A	18.3
14.0	B	14.0	CONNECTED AMPS	30.6		B	22.3	DEMAND AMPS		16.6	B	8.3

EST MAX DEMAND = VOLTS x MAX DEMAND AMPS = 240 x 37 = 9 kVA

MINIMUM AMPACITY = 1.25 x MAX DEMAND AMPS = 1.25 x 37 = 47 AMPS

NOTES: "G" IN THE CIRCUIT BREAKER COLUMN INDICATES A GFCI TYPE CIRCUIT BREAKER
" * " IN THE CIRCUIT BREAKER COLUMN INDICATES A CIRCUIT BREAKER HANDLE LOCK
"E" IN THE CIRCUIT BREAKER COLUMN INDICATES AN EQUIPMENT PROTECTION GROUND FAULT BREAKER (30 mA TRIP)

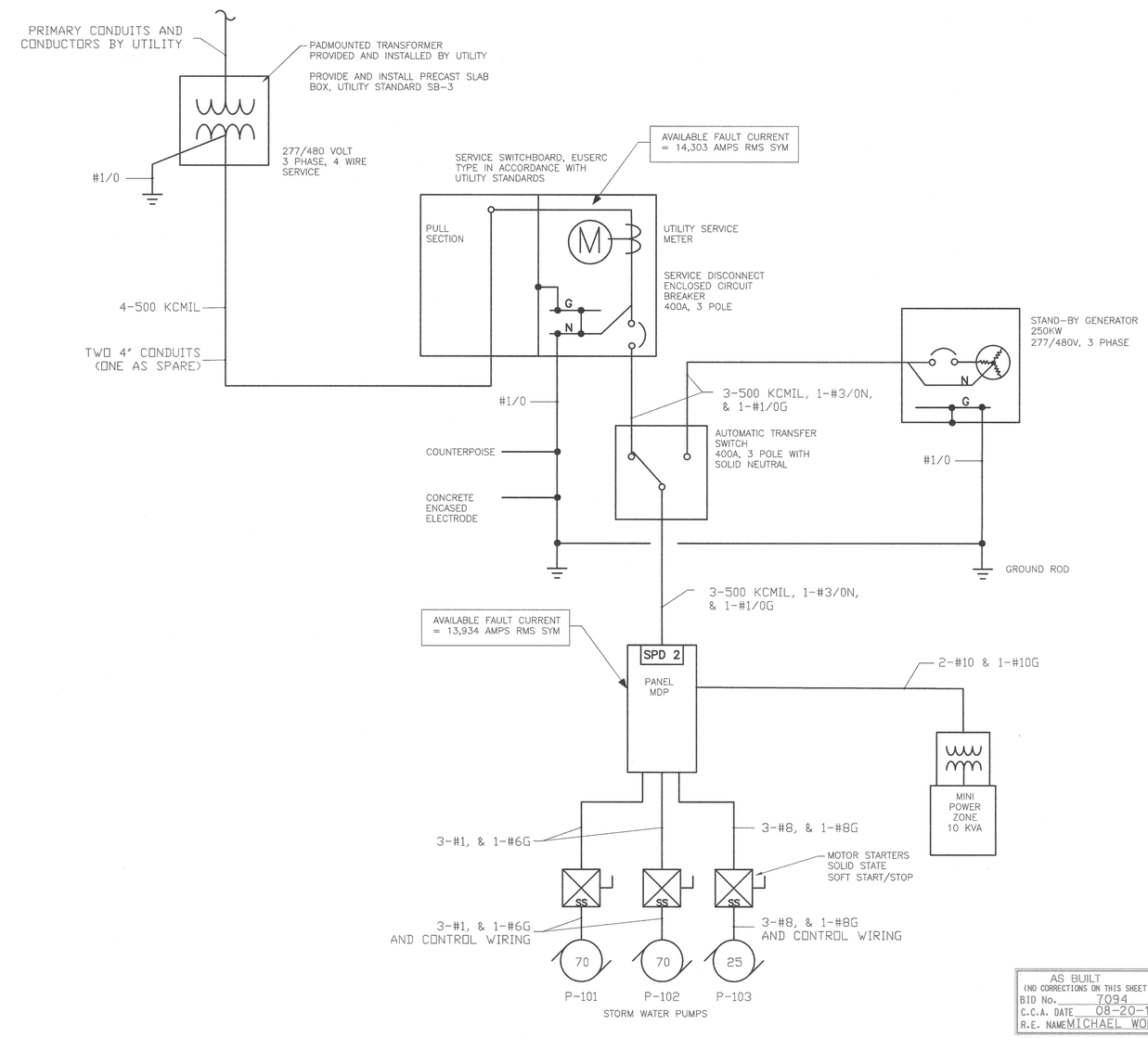

AS BUILT
(NO CORRECTIONS ON THIS SHEET)
BID No. 7094
C.C.A. DATE 08-20-15
R.E. NAME MICHAEL WOLFF

ELECTRICAL ONE-LINE
NTS

IMPORTANT NOTICE
Section 4216/4217 of the Government Code requires a Dig Alert Identification Number to be issued before a "Permit to Excavate" will be valid. For your Dig Alert I.D. Number call
CALL TOLL FREE
48 HOURS BEFORE YOU DIG
UNDERGROUND SERVICE ALERT
1-800-227-2600

WILSON & COMPANY
625 E. CARNEGIE DRIVE SUITE 100
SAN BERNARDINO, CA 92408
(909) 806-8000
www.wilsonco.com

DATE 8-7-12

REGISTERED PROFESSIONAL ENGINEER — MARK W. PETERSON — E 14689 — Exp. 6/30/2012 — ELECTRICAL — STATE OF CALIFORNIA — 3/01/2012

MARK	REVISIONS	APPR.	DATE

DESIGNED BY DWP DRAWN BY DWP CHECKED BY

CITY OF RIVERSIDE, CALIFORNIA
PUBLIC WORKS DEPARTMENT
STREETER AVENUE UNDERPASS
ELECTRICAL ONE LINE SE-04
HORIZ. SCALE: VERT. SCALE: N/A

D-848
SHEET 103 OF 191
FILE NO.

DATE: 6/2012
BOCKENSTETTE, ROBERT CURTIS
SE004.dwg

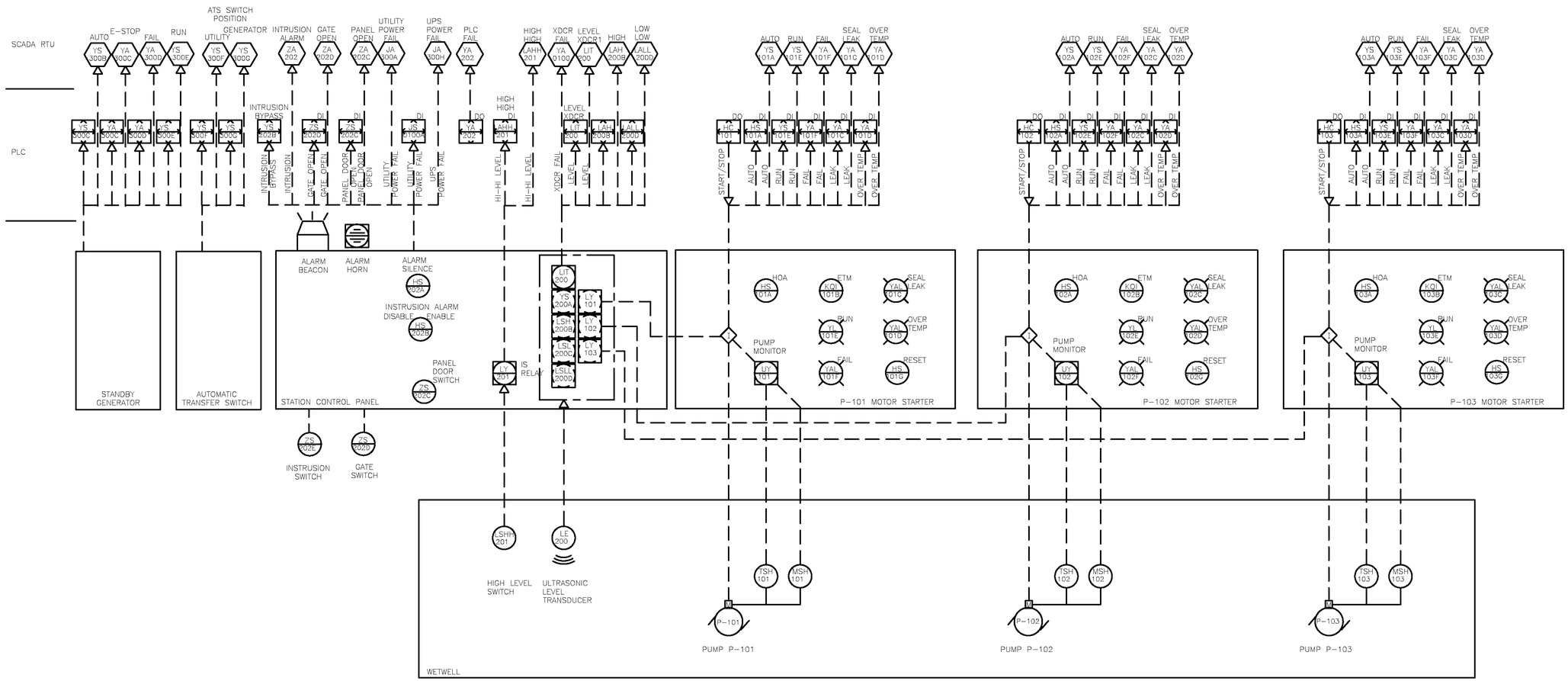

AS BUILT
(NO CORRECTIONS ON THIS SHEET)
BID No. 7094
C.C.A. DATE 08-20-15
R.E. NAME MICHAEL WOLFF

PUMP STATION CONTROLS
NTS

IMPORTANT NOTICE
Section 4216/4217 of the Government Code requires a Dig Alert Identification Number to be issued before a Permit can be issued to be valid. For your Dig Alert I.D. Number call
CALL TOLL FREE
48 HOURS BEFORE YOU DIG
UNDERGROUND SERVICE ALERT
1-800-227-2600

WILSON & COMPANY
625 E. CARNEGIE DRIVE SUITE 100
SAN BERNARDINO, CA 92408
(909) 806-8000
www.wilsonco.com

DATE 8-7-12

REGISTERED PROFESSIONAL ENGINEER
ROBERT W. PETERSON
E 14689
Exp. 6/30/2014
ELECTRICAL
STATE OF CALIFORNIA
8/7/2012

MARK	REVISIONS	APPR.	DATE

DESIGNED BY RWP DRAWN BY RWP CHECKED BY

CITY OF RIVERSIDE, CALIFORNIA
PUBLIC WORKS DEPARTMENT
STREETER AVENUE UNDERPASS
PUMP STATION CONTROLS SE-05
HORIZ. SCALE: VERT. SCALE: N/A

D-848
SHEET 104 OF 191
FILE NO.

DATE: 6/2012

BOCKENSTETTE, ROBERT CURTIS
SE005.dwg

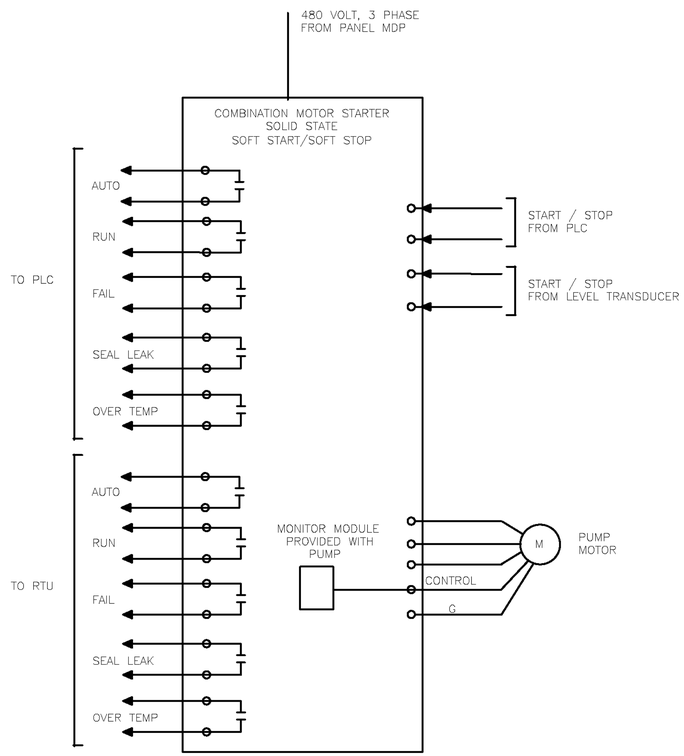

NOTES:

1. TYPICAL FOR STORMWATER PUMPS P-101, P-102, AND P-103
2. CONNECT BOTH START CONTROL CONTACTS IN PARALLEL ON "AUTO" SIDE OF H-O-A.

STORMWATER PUMP MOTOR STARTER
NTS

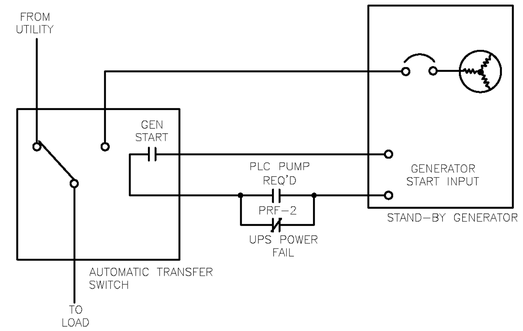

GENERATOR START CONTROLS:
1. GENERATOR WILL BE STARTED IF UTILITY POWER FAILS AND THE PLC CALLS FOR A PUMP TO RUN.

OR

2. GENERATOR WILL BE STARTED IF UTILITY POWER FAILS AND UPS POWER FAILS.

RELAY PFR IS NORMALLY ENERGIZED.

NOTE: GENERATOR WILL BE MANUALLY EXERCISED BY THE OWNER. SET EXERCISE CONTROLS TO "OFF".

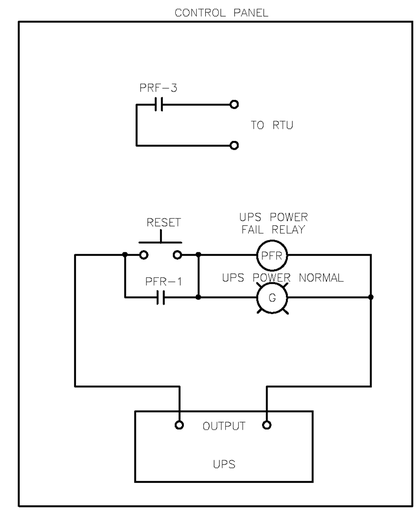

GENERATOR START CONTROLS
NTS

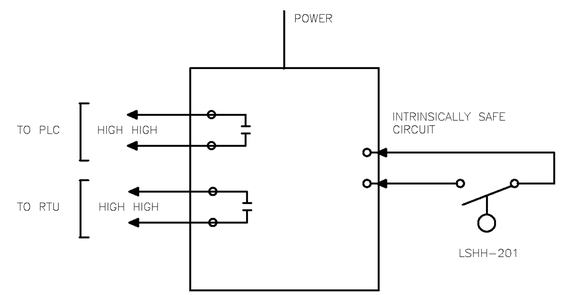

NOTES:

1. PROVIDE INTRINSICALLY SAFE RELAY
2. ROUTE ALL INTRINSICALLY SAFE WIRING SEPARATED FROM OTHER WIRING.
3. INSTALL IN ACCORDANCE WITH U.L. AND NATIONAL ELECTRICAL CODE ARTICLE 504.

AS BUILT
(NO CORRECTIONS ON THIS SHEET)
BID No. 7094
C.C.A. DATE 08-20-15
R.E. NAME MICHAEL WOLFF

WET WELL HIGH HIGH LEVEL SWITCH
NTS

IMPORTANT NOTICE
Section 4216/4217 of the Government Code requires a Dig Alert Identification 48 Hours before you dig underground. "Permit to Excavate" will be valid. For your Dig Alert I.D. Number call
CALL TOLL FREE
48 HOURS BEFORE YOU DIG
UNDERGROUND SERVICE ALERT
1-800-227-2600

WILSON &COMPANY
625 E. CARNEGIE DRIVE SUITE 100
SAN BERNARDINO, CA 92408
(909) 806-8000
www.wilsonco.com

DATE 8-7-12

REGISTERED PROFESSIONAL ENGINEER
MARK W. PETERSON
E 14689
Exp. 6/30/2014
ELECTRICAL
STATE OF CALIFORNIA
8/7/2012

MARK	REVISIONS	APPR.	DATE

DESIGNED BY CMP DRAWN BY CMP CHECKED BY

CITY OF RIVERSIDE, CALIFORNIA
PUBLIC WORKS DEPARTMENT

STREETER AVENUE UNDERPASS

CONTROL DIAGRAMS SE-06

HORIZ. SCALE: VERT. SCALE: N/A

D-848
SHEET 105 OF 191
FILE NO.

DATE: 8/2012

BOCKENSTETTE, ROBERT CURTIS
SE006.dwg

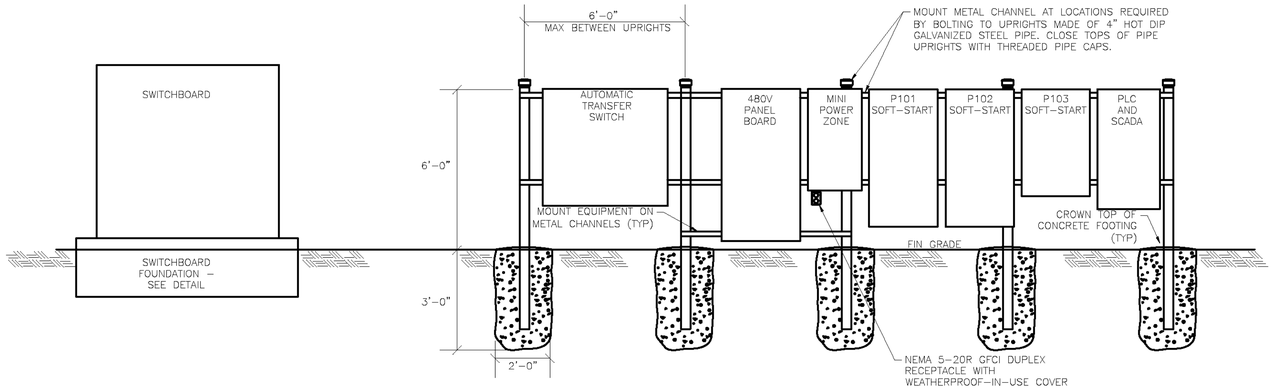

SWITCHBOARD ELEVATION
NTS

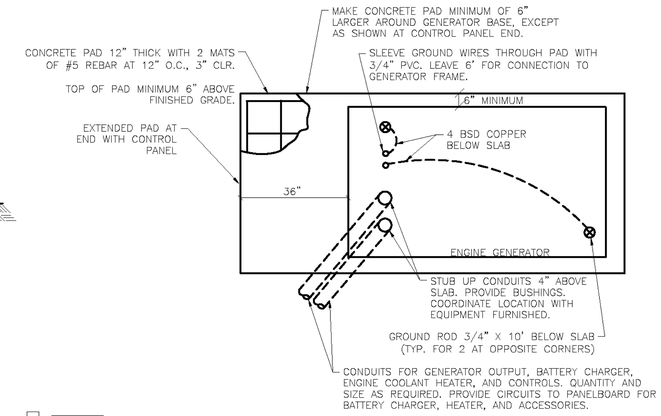

ENGINE GENERATOR FOUNDATION PLAN
NTS

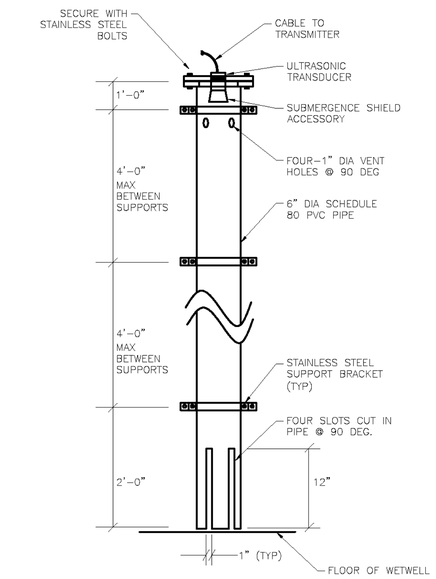

STILLING WELL ELEVATION
NTS

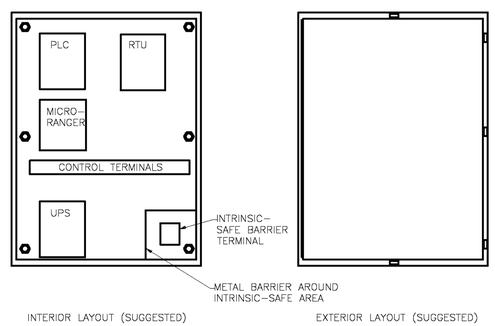

NOTE:

PANEL LAYOUTS SHOWN ARE SUGGESTIONS ONLY. FINAL LAYOUT TO BE DETERMINED BY PANEL BUILDER- SUBMIT FOR APPROVAL. PANEL TO BE NEMA 4X STAINLESS STEEL ENCLOSURE- SIZE AS REQUIRED WITH INTERIOR MOUNTING PLATE. EXTERIOR FINISH TO BE BRUSHED STAINLESS STEEL; FINISH ON INTERIOR MOUNTING PLATE TO BE WHITE ENAMEL. PANEL BUILDER TO COORDINATE ALL WIRING AND OTHER REQUIREMENTS WITH CITY OF RIVERSIDE TELEMETRY DEPARTMENT.

ELECTRICAL EQUIPMENT RACK ELEVATION
NTS

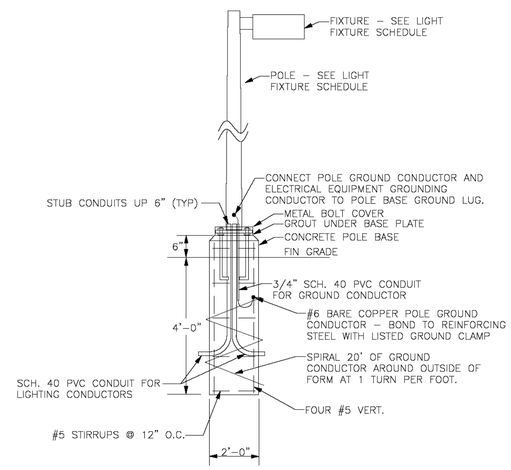

LIGHT POLE AND BASE DETAIL
NTS

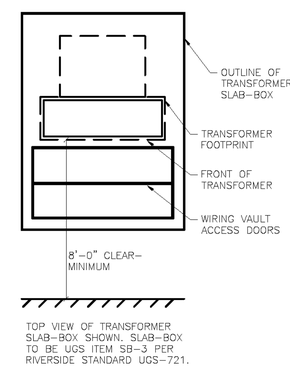

TOP VIEW OF TRANSFORMER SLAB-BOX SHOWN. SLAB-BOX TO BE UGS ITEM SB-3 PER RIVERSIDE STANDARD UGS-721.

TRANSFORMER SLAB-BOX PLAN
NTS

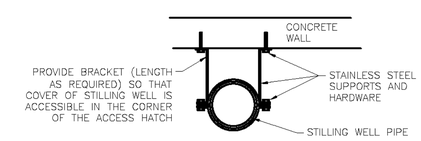

PLAN VIEW
NTS

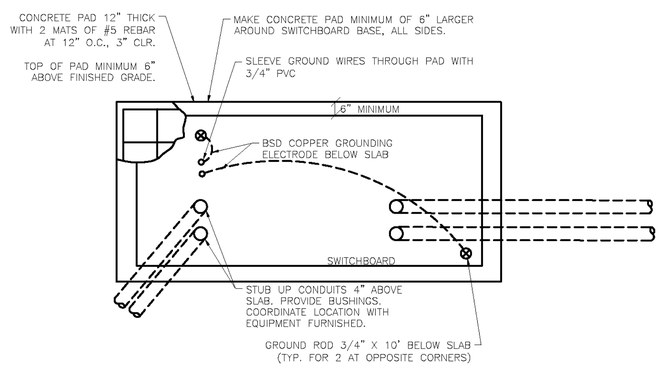

SWITCHBOARD FOUNDATION PLAN
NTS

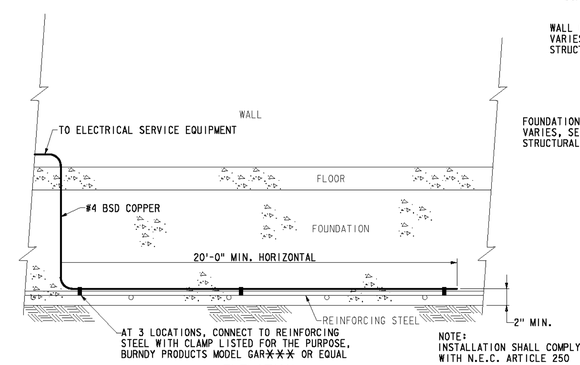

ELEVATION

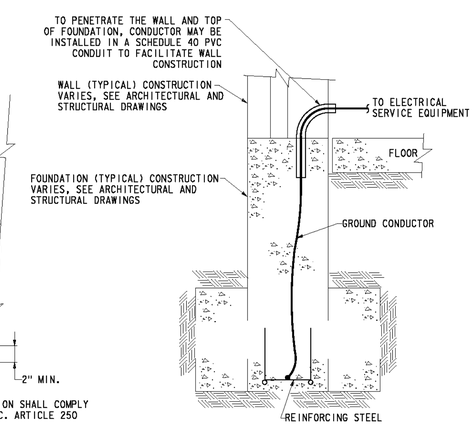

SECTION

CONCRETE ENCASED ELECTRODE DETAIL
NTS

AS BUILT
(NO CORRECTIONS ON THIS SHEET)
BID No. 7094
C.C.A. DATE 08-20-15
R.E. NAME MICHAEL WOLFF

IMPORTANT NOTICE
Section 4216/4217 of the Government Code requires a Dig Alert Identification Number to be issued before a "Permit to Excavate" will be valid. For your Dig Alert I.D. Number call
CALL TOLL FREE
48 HOURS BEFORE YOU DIG
UNDERGROUND SERVICE ALERT
1-800-227-2600

WILSON & COMPANY
625 E. CARNEGIE DRIVE SUITE 100
SAN BERNARDINO, CA 92408
(909) 806-8000
www.wilsonco.com

DATE 8-7-12

REGISTERED PROFESSIONAL ENGINEER — JAMES W. PETERSON — E 14689 — Exp. 6/30/2014 — ELECTRICAL — STATE OF CALIFORNIA — 8/7/2012

MARK	REVISIONS	APPR.	DATE

DESIGNED BY MW DRAWN BY DPK CHECKED BY

CITY OF RIVERSIDE, CALIFORNIA
PUBLIC WORKS DEPARTMENT

STREETER AVENUE UNDERPASS

ELECTRICAL DETAILS SE-07

HORIZ. SCALE: VERT. SCALE: N/A

D-848
SHEET 106 OF 191

FILE NO.

DATE: 8/2012

BOCKENSTETTE, ROBERT CURTIS
S2207.dwg

SEQUENCE OF OPERATIONS:

DESCRIPTION:

THE STORMWATER PUMP STATION IS EQUIPPED WITH THREE (3) PUMPS – P–101, P–102, P–103. PUMP P–101 AND P–102 ARE THE LARGER PUMPS (70 HP EACH) AND HANDLE THE LARGE VOLUMES OF STORMWATER FLOW. P–103 IS A SMALLER PUMP (25 HP) AND HANDLES THE LOW VOLUME STORMWATER AND IS USED TO COMPLETELY DRAIN THE WET WELL AT THE END OF A STORM EVENT.

LEVEL TRANSDUCER:

WATER LEVEL IN THE WET WELL IS MONITORED BY AN ULTRASONIC LEVEL TRANSDUCER THAT MEASURES THE WATER LEVEL. THIS LEVEL MEASUREMENT IS TRANSMITTED TO THE PLC AS AN ANALOG VALUE AND THE VARIOUS START AND STOP ELEVATIONS ARE PROGRAMMED INTO THE PLC. AS A REDUNDANT CONTROL, CONTROL DRY CONTACTS IN THE ULTRASONIC LEVEL TRANSDUCER ARE ALSO WIRED DIRECTLY TO THE MOTOR STARTERS TO CAUSE THE PUMPS TO OPERATE BASED UPON WET WELL LEVEL EVEN WHEN THE PLC IS NOT OPERATIONAL.

P–103:

PUMP P–103 IS EQUIPPED WITH A HAND–OF–AUTO SELECTOR SWITCH. WHEN THE SWITCH IS IN THE "HAND" POSITION, THE PUMP WILL RUN AND WHEN IN THE "OFF" THE PUMP WILL REMAIN OFF. WHEN THE SWITCH IS IN THE "AUTO" POSITION, THE PUMP IS CONTROLLED BY THE PLC AND THE ULTRASONIC LEVEL TRANSDUCER. WHEN THE WATER LEVEL IN THE WET WELL RISES TO THE P–103 (THE SMALLER PUMP) START LEVEL, THE PUMP P–103 IS STARTED AND OPERATES UNTIL THE LEVEL DROPS TO THE P–103 STOP LEVEL. IF THE LEVEL RISES AGAIN, THE PUMP CYCLES ON AND OFF IN RESPONSE TO THE LEVEL. THE CYCLE WILL REPEAT AS NEEDED.

P–101 AND P102:

PUMPS P–101 AND P–102 ARE ALSO EQUIPPED WITH HAND–OFF–AUTO SELECTOR SWITCHES. WHEN THE SWITCHES ARE IN THE "AUTO" POSITION, THE PUMPS ARE CONTROLLED BY THE PLC AND THE ULTRASONIC LEVEL TRANSDUCER. WHEN THE WET WELL LEVEL RISES ABOVE THE RANGE OF THE P–103 CONTROLS (BECAUSE THE INFLOW OF STORMWATER IS GREATER THAN PUMP P–103 CAN PUMP), PUMP P–103 IS STOPPED AND PUMPS P–101 AND P–102 ARE OPERATED IN A LEAD – LAG, ALTERNATING SEQUENCE. WHEN THE LEVEL REACHES THE LAG PUMP START ELEVATION BOTH PUMPS P–101 AND P–102 WILL RUN. WHEN THE WET WELL DROPS TO THE P–101 AND P–102 STOP ELEVATION, BOTH PUMPS P–101 AND P–102 WILL BE STOPPED AND P–103 WILL BE STARTED AND OPERATE AS DESCRIBED ABOVE. THE CYCLE WILL REPEAT AS NEEDED.

WET WELL HIGH LEVEL:

HIGH WATER LEVEL IN THE WET WELL IS MONITORED BY A LEVEL SWITCH LOCATED IN THE WET WELL. WHEN A HIGH LEVEL OF WATER IS PRESENT IN THE WET WELL (ABOVE THE NORMAL OPERATING RANGE OF THE PUMPS) THE LEVEL SWITCH IS ACTIVATED. THE LEVEL SWITCH SIGNALS BOTH THE PLC AND THE SCADA RTU THAT A HIGH LEVEL CONDITION IS PRESENT. THE PLC WILL COMMAND BOTH STORMWATER PUMPS P–101 AND P–102 TO OPERATE UNTIL THE WET WELL LEVEL DROPS TO THE RESPECTIVE PUMP STOP ELEVATIONS.

AS BUILT
(NO CORRECTIONS ON THIS SHEET)
BID No. 7094
C.C.A. DATE 08-20-15
R.E. NAME MICHAEL WOLFF

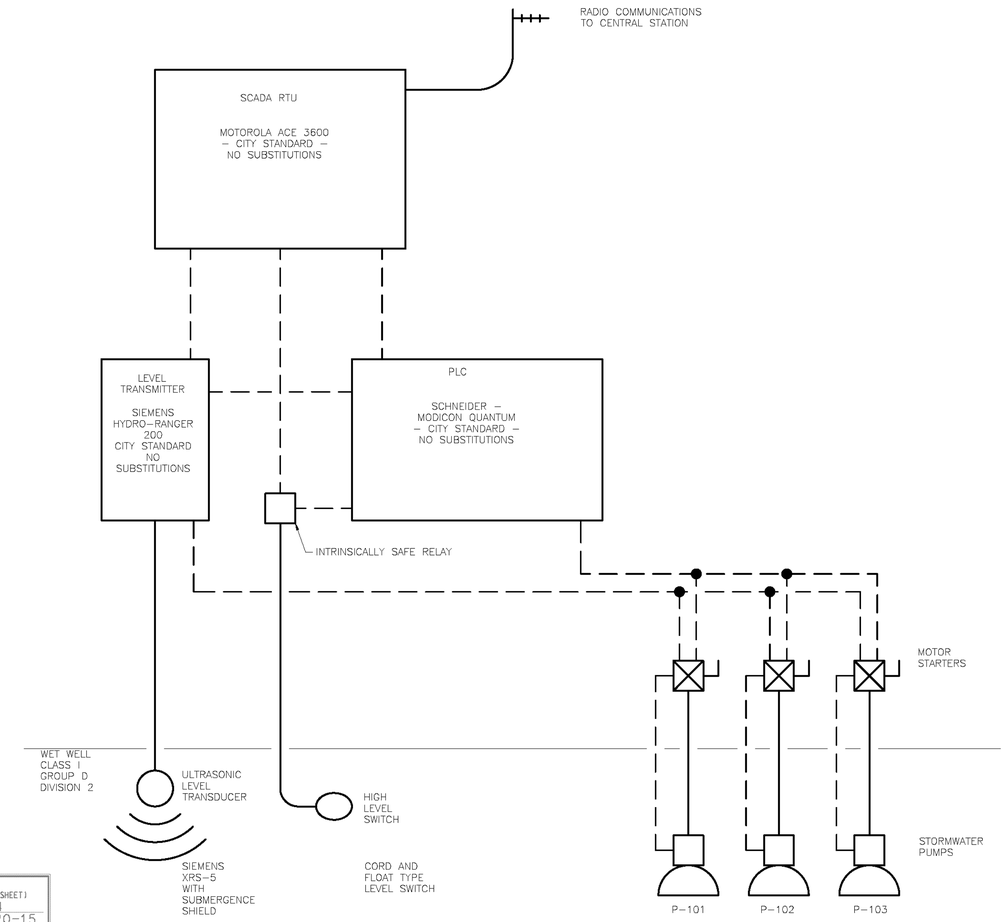

CONTROL SCHEMATIC
NTS

IMPORTANT NOTICE
Section 4216/4217 of the Government Code requires a Dig Alert Identification Number to be issued before a "Permit to Excavate" will be valid. For your Dig Alert I.D. Number call
CALL TOLL FREE
48 HOURS BEFORE YOU DIG
UNDERGROUND SERVICE ALERT
1–800–227–2600

WILSON & COMPANY
625 E. CARNEGIE DRIVE SUITE 100
SAN BERNARDINO, CA 92408
(909) 806-8000
www.wilsonco.com

DATE 8-7-12

REGISTERED PROFESSIONAL ENGINEER JAMES W. PETERSON E 14689 Exp. 6/30/2014 ELECTRICAL STATE OF CALIFORNIA 8/01/2012

MARK	REVISIONS	APPR.	DATE

DESIGNED BY JWP DRAWN BY DPK CHECKED BY

CITY OF RIVERSIDE, CALIFORNIA
PUBLIC WORKS DEPARTMENT
STREETER AVENUE UNDERPASS
CONTROL DETAILS SE-08
HORIZ. SCALE: VERT. SCALE: N/A

D–848
SHEET 107 OF 191
FILE NO.

DATE: 6/2012
BOCKENSTETTE, ROBERT CURTIS
SE008.dwg